norelem

THE BIG GREEN BOOK

cad data: everything at a click.

WWW or APP

CAD data for all norelem components can be found in various file formats at www.norelem.com - now you have the entirety of standard elements at your fingertips. Accordingly, all technical and geometric data can be smoothly integrated into your system allowing you to concentrate solely on construction.

MY CUSTOMER NUMBER

Enter your customer number here to have it always at hand.
You receive it with your first order.

CONTENTS

New products p. 14 – 15

Main groups at a glance p. 16 – 17

Image directory of all parts p. 18

Technical information p. 1951

Index p. 1968

DIN-directory p. 1981

GERMANY
norelem Normelemente KG
Volmarstraße 1
71706 Markgröningen
Tel. +49 7145 206-41
info@norelem.de
www.norelem.de

FRANCE
norelem SAS
5, rue des Libellules
10280 Fontaine-les-Grès
Tel. +33 3 25 71 89 30
info@norelem.fr
www.norelem.fr

SWITZERLAND
norelem Normelemente AG
Chli Ebnet 1
6403 Küssnacht am Rigi
Tel. +41 41 833 87 00
info@norelem.ch
www.norelem.ch

CHINA
norelem Trading (Taicang) Co., Ltd.
Unit 1256, Dong Ting Building
No 319 Middle Zheng He Road
215400 Taicang, PR China
Tel. +86 512 5377 5817
info@norelem.cn
www.norelem.cn

UNITED KINGDOM
norelem LTD
The Innovation Centre
1 Devon Way
B31 2TS Birmingham
Tel. +44 121 222 5321
info@norelem.co.uk
www.norelem.co.uk

SWEDEN
norelem AB
Zakrisdalsvägen 26
653 42 Karlstad, Sweden
Tel. +46 545 688 11
info@norelem.se
www.norelem.se

SPAIN
norelem Ibérica S.L.
c/ Osona, 2
08820 El Prat de Llobregat
(Barcelona)
Tel. +34 93 522 7521
info@norelem.es
www.norelem.es

MEXIKO
norelem S. de R.L. de C.V.
Av. Santiago Poniente No. 116
Parque Industrial Colinas de San Luis
Ciudad Satélite Zona Industrial
Delegación Villa de Pozos
San Luis Potosí, S.L.P. CP: 78423
Tel. +52 444 454 36 50
info@norelem.mx
www.norelem.mx

With the release of this catalogue, all previous publications become invalid. Dimensions and other data correspond to the current level of technology. We reserve the right to make technical changes. We accept no liability for any printing errors. Any reprinting or reproduction – in whole or in part – is permitted only with our prior consent. Copyright: norelem Normelemente KG / WE10ENCAT1810 / Printed in Germany

green light for all you have in mind.

Our goal at norelem is to optimally support you in implementing your ideas. We are always working on further expanding our selection of high-quality standard parts – and on providing even faster and more flexible delivery. This is why you can find all standard parts for your ideas in our catalogue.

THE BIG GREEN BOOK

you are the doers, we make it happen.

FIND WHAT YOU NEED FASTER: OUR PRODUCT GROUPS

norelem positions.

Our flexible standard parts system.

norelem moves.

Systems and components for power transmission in machine and plant construction.

norelem measures.

Devices, fixtures and standard elements for measuring and testing.

norelem assembles.

Aluminium profiles, connectors, covers and special components.

norelem clamps.

Vices and accessories with maximum holding force for machining workpieces.

norelem trans-ports.

Products from material handling: wheels, castors and ball transfer units.

norelem techno shop.

All additional accessories: from adhesives to cylinder cleaners.

we are here for you. international.

At our primary locations in Germany and France, as well as our international subsidiaries, we support you in achieving your targets in machine and plant construction with an unrivalled selection of standard parts and components. THE BIG GREEN BOOK offers designers and technicians an extensive and clearly arranged assortment of quality components.

We support your project right from the start - with expert advice, a complete CAD database and fast delivery. For the last 60 years norelem has been dynamically evolving, consistently amending our portfolio and continuously optimising the logistics.

norelem Germany

norelem France

norelem international

GLOBALISATION – A FUTURE WITH SYSTEM

The road to globalisation

The first German subsidiary was established in 1958, the logistics centre in 2002 and the new company premises in Markgröningen, Germany in 2015. Since 2012 we have been following our globalisation strategy and are now present in Switzerland, Great Britain, Sweden, Hungary, Spain and Mexico. 2018 will also see the establishment of a branch in China.

1958
PMP becomes norelem and the German subsidiary is founded in Stuttgart.

1962
norelem Germany moves from Stuttgart to Markgröningen.

2002
Storage and delivery of products concentrated in a new logistic centre.

2012
Start of the globalisation strategy, international branches are established in quick succession.

60 years experience with success

Precise and high-quality products for measurement technology laid the foundation for the success and growth of norelem. One of the most renowned suppliers for standard parts and machine elements developed from this small company. Today, norelem is represented in eight countries and has a portfolio with over 43,000 products, 98% of them available ex stock.

60
1958-2018

15 years THE BIG GREEN BOOK

Our first product catalogue from 1972 quickly found great demand from companies and technical colleges. More company catalogues followed. A major milestone in the company record was to bring all available products together in 2003 in one main catalogue: THE BIG GREEN BOOK – since then this is one of the cornerstones of the norelem brand and the most important reference work for designers.

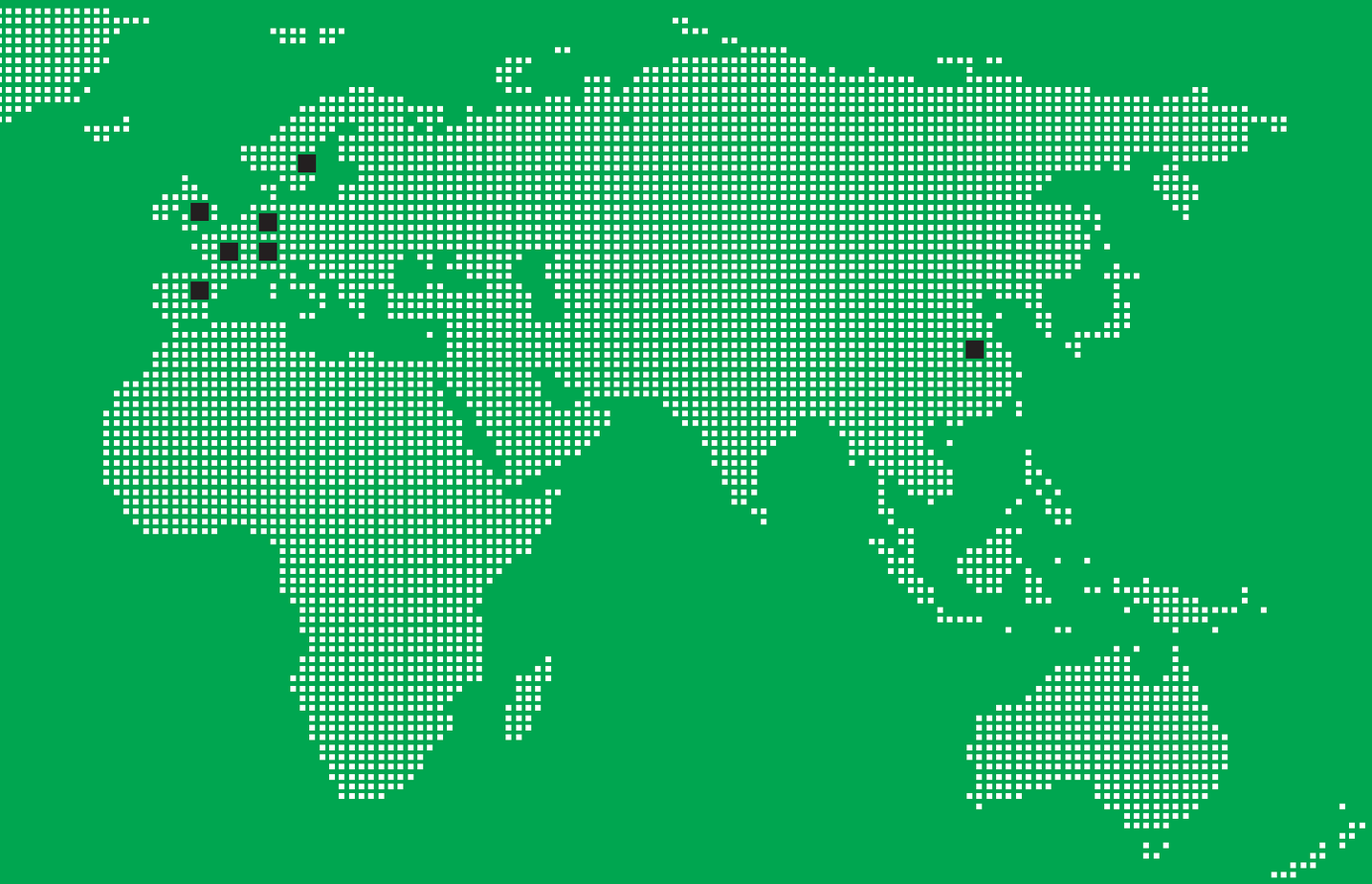

2013, 2015

2013: norelem Normelemente AG, Switzerland
2015: norelem LTD, Great Britain

2016, 2017

2016: norelem AB, Sweden
2017: norelem S. de R.L. de C.V., Mexico

2018

Subsidiaries in China (norelem Trading (Taicang) Co., Ltd.) and Spain (norelem Ibérica S.L.) are established.

Fostering tomorrow's ideas

Promoting young talent as an important investment in the future is part of our philosophy. Our catalogue was distributed to schools from the very start. Under the umbrella of the norelem ACADEMY, we offer lectures, training courses and support technicians and students with interesting projects, and support the international Formula Student© competition with products and know-how.

norelem ACADEMY

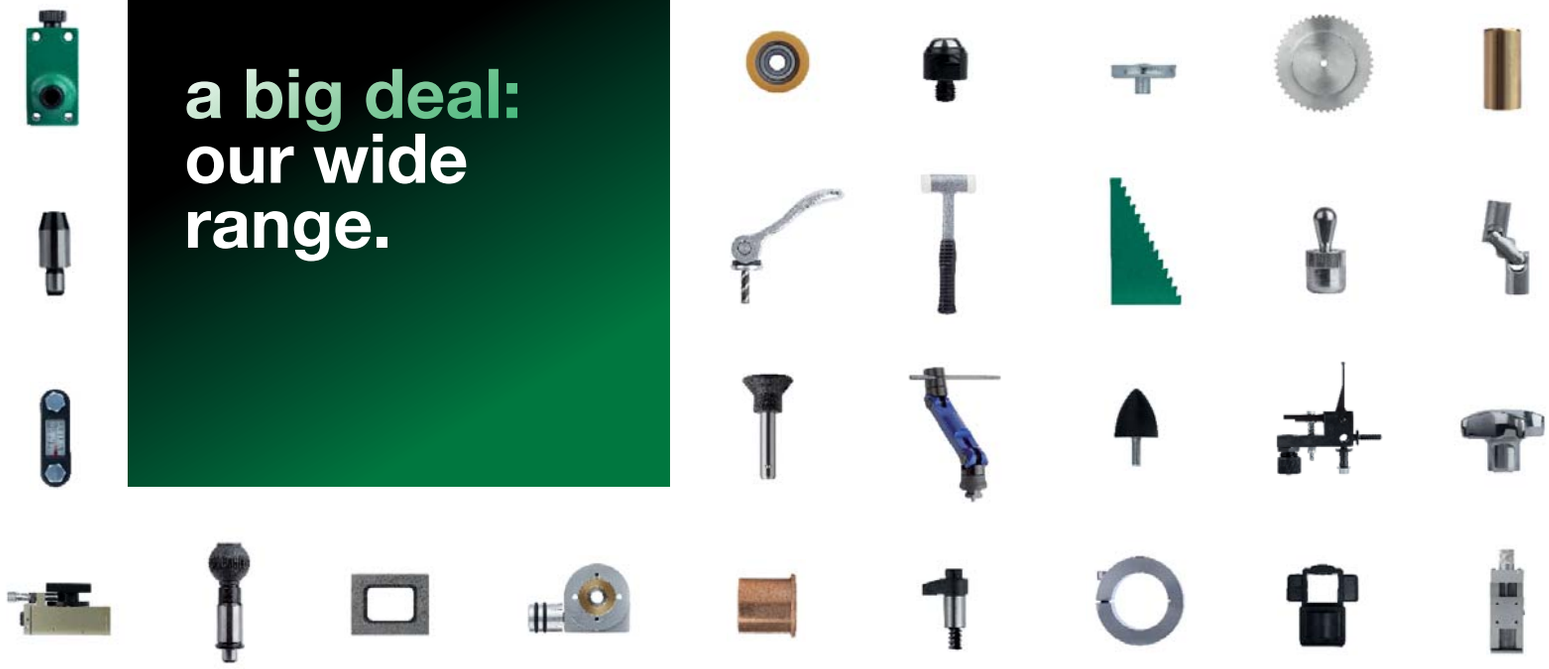

a big deal: our wide range.

43,000
98%

HIGHEST QUALITY IN 43,000 ITEMS.
98 % AVAILABLE EX STOCK.

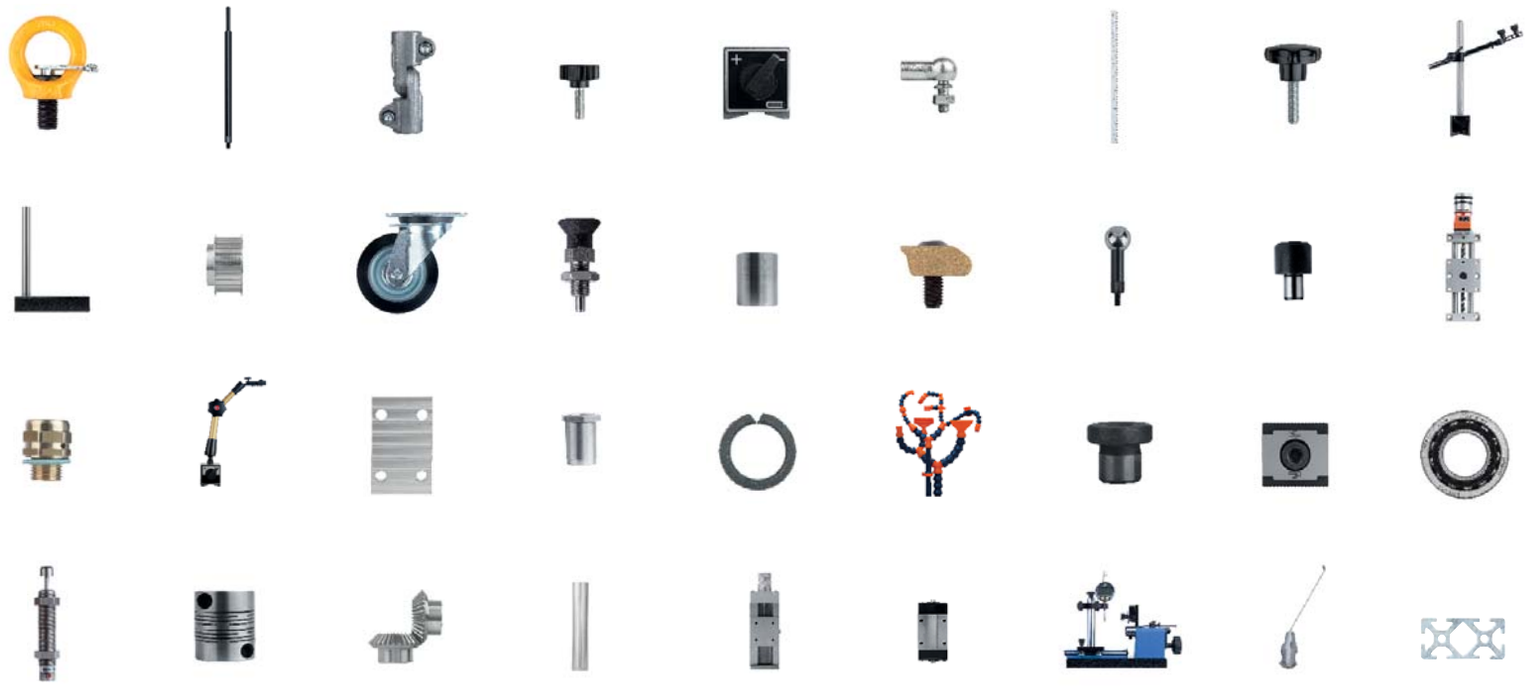

All Online

ALL ARTICLES AVAILABLE IN THE ONLINE SHOP: WITH PRACTICAL FUNCTIONS SUCH AS SHOPPING CART LINK AND RAPID ORDERING.

Mini and manual clamps
see page 568

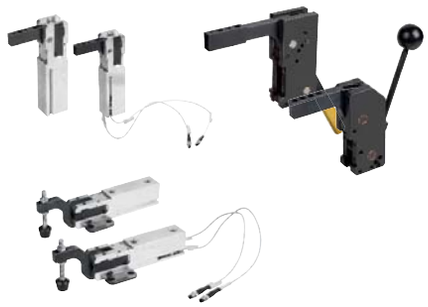

Worm screws and worm wheels
see page 1370

Transmissions
Worm and bevel gear drives
see page 1396

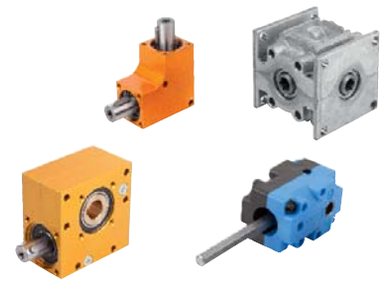

O-rings
see page 1497

we now make even more possible.

Compression springs
see page 1548

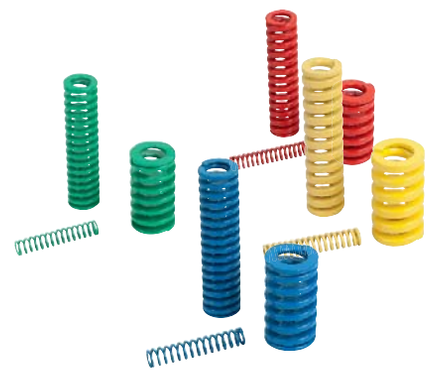

Elastomer buffers
see page 1556

Profile dampers
see page 1576

Gas springs
Stainless steel
see page 1584

Hinges aluminium
with detent or adjustable friction
see page 1703

Security hinge switches
see page 1708

Small conveyor belts
see page 1905

NEW

11 OF OUR 5,000 NEW PRODUCTS

We constantly develop our product range in order to offer you the best solutions for every challenge. To this end, we work closely with our customers in a wide variety of application sectors and can therefore respond quickly to technological developments and changes in requirements. This makes every new article in our range a further component for your success.

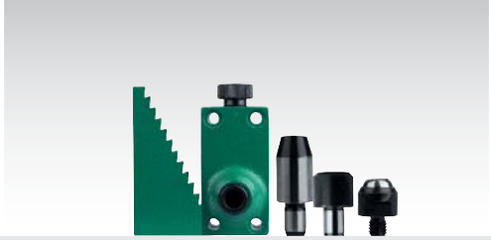

01000
Plates
Circular plates
Profiles
Angle plates
Tombstone cubes

02000
Self-aligning pads
Support elements
Rest pads and
Positioning feet

03000
Spring plungers
Indexing plungers
Stops
Ball lock pins
Centring and
Positioning elements
Locking pins
T-slot nuts

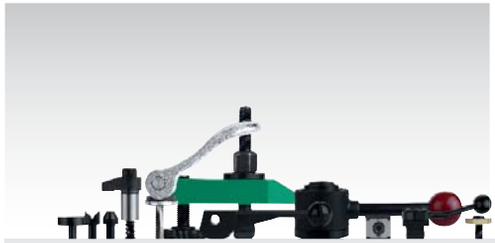

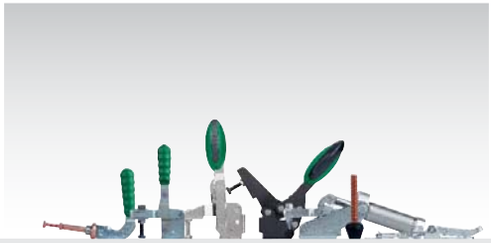

04000
Clamp straps
Cam clamps
Clamping devices
Swing clamps
Clamping hooks
Clamping cams

05000
Toggle clamps
Pneumatic clamps
Quarter-turn locks
Latches
Accessories for clamps

06000
Grips, handles and knobs
Handwheels and
crank handles
Clamping and tension levers
Clamping joints
Pull handles
Tubular handles
Recessed handles

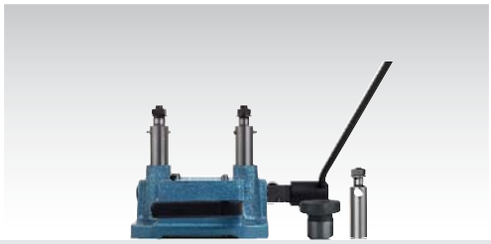

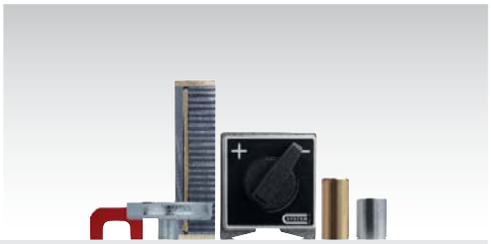

07000
Connecting elements
Ball-end thrust screws
Baseplates
Ring bolts
Grub screws and
pressure pads
Torque bolts and
threaded inserts
Hoist rings / Swivel bales

08000
Drilling jigs
Drill bushes

09000
Magnets

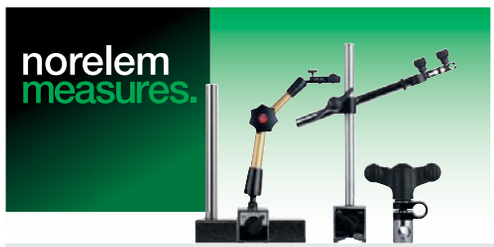

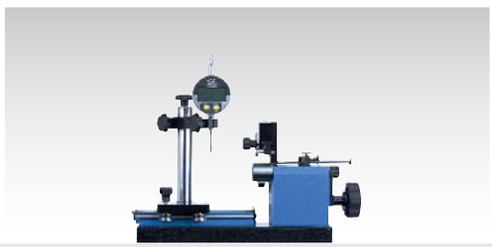

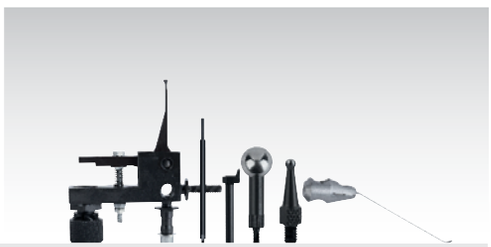

31000
Inspection tables
Gauge stands
Joints

32000
Concentricity gauges
Dial gauges
Universal
measuring fixtures

33000
Standard inspection and
test fixture elements

10000
Aluminium profiles
Connectors
Covers
Special elements

41000
Vices
Accessories

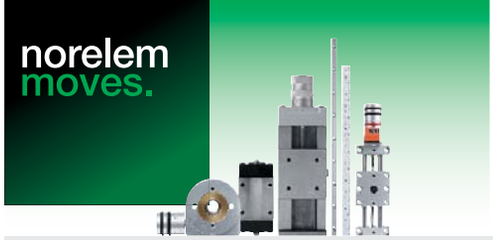

21000

Slides
Guide rails
Positioning tables
Scales
Linear guide systems
Position indicators
Level vials

22000

Chains and sprockets
Timing belts and toothed belt pulleys
Gears and gear racks
Worm screws and worm wheels
Transmission

23000

Couplings
Shrink discs
Keyless locking couplings
Cardan joints
Bearings
Seals

Product group 20000 is available at www.norelem.com

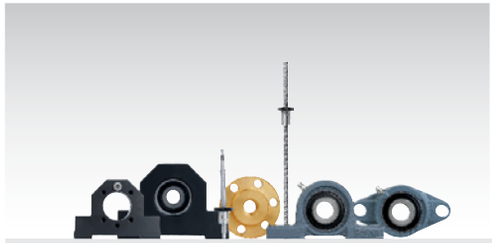

24000

Trapezoidal thread spindles
Ball screw linear actuators
Pillow block bearings

26000

Springs
Elastomer springs
Rubber buffers
Shock absorbers
Profile dampers
Gas springs

27000

Clevis / Angle joints
Rod ends
Brackets
Levelling sets
Machine / Levelling feet
Hinges

28000

Oil level gauges
Caps
Plugs
Vent screws
Dipsticks
Filler necks

29000

Tubular connection system
Column system
Monitor brackets

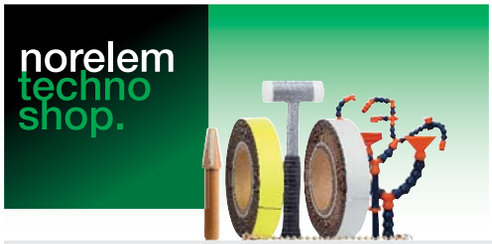

95000

Wheels and rollers
Ball transfer units
Small conveyor belts

96000

LOC-LINE®
Magnetic labelling elements
Tools
Transport protection

97000

Lubricants
LOCTITE®
Grease nipples

norelem positions

Flexible standard component system

01000

Basic elements
Subplates
Discs
Profiles
Angle plates
Tombstones

01040
Page 80

Base plate with T-slots
grey cast iron

01060
Page 81

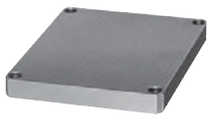

Base plates steel

01127
Page 82

Base plates

01130
Page 82

Rectangular plates
precision steel

01140
Page 83

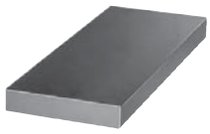

Plates
grey cast iron or aluminium

01148
Page 84

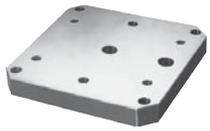

Subplates

01150
Page 86

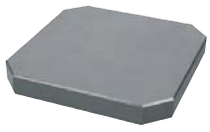

Subplates machined all sides
grey cast iron

01160
Page 87

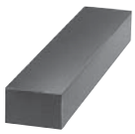

Block machined all sides
grey cast iron or aluminium

01180
Page 87

Base plate with flanges
grey cast iron

01250
Page 88

Angle plates
with or without T-slots cast iron

01252
Page 89

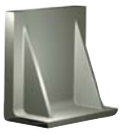

Angle plates
aluminium

01263
Page 90

Tombstones single-sided

01265
Page 92

Tombstones double-sided

01267
Page 94

Tombstones window frame

01270
Page 95

Tombstones double-sided
grey cast iron

01280
Page 96

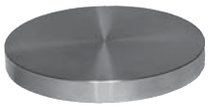

Circular plates
steel

01320
Page 96

Circular plates
grey cast iron or aluminium

01380
Page 97

L-profiles
grey cast iron or aluminium

01440
Page 98

L-profiles unequal
grey cast iron or aluminium

01520
Page 98

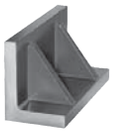

L profile with reinforcing ribs
grey cast iron

01560
Page 99

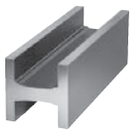

H-profiles
grey cast iron or aluminium

01580
Page 99

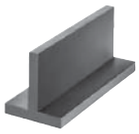

T-profiles machined all sides
grey cast iron or aluminium

01640
Page 100

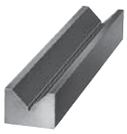

V-block machined all sides
grey cast iron or aluminium

01660
Page 100

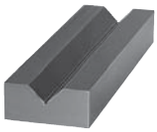

V-block machined all sides
extra wide, grey cast iron

01680
Page 101

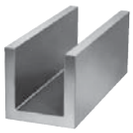

U-profiles machined all sides
grey cast iron or aluminium

01740
Page 102

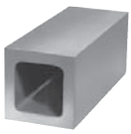

Square hollow profiles
grey cast iron

01760
Page 102

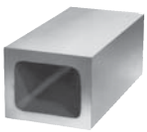

Rectangular hollow profiles
grey cast iron

01780
Page 103

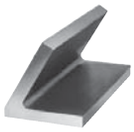

Angle profiles 60°
grey cast iron

01820
Page 103

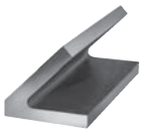

Angle profiles 45°
grey cast iron

01850
Page 104

Tombstones cube

01852
Page 106

Tombstones cube
grey cast iron

New/Expanded Items

Self-aligning pads
Fixture feet
Clamp rests
Support elements

02000
Page 109

Self-aligning pads

02001
Page 111

Self-aligning pads
swivel angle 14° and 20°

02002
Page 113

Self-aligning pads
with O-ring

02003
Page 114

Self-aligning pads
with O-ring and exchangeable inserts

02004
Page 116

Self-aligning pads
self-righting

02005
Page 117

Self-aligning pads
adjustable

02006
Page 119

Self-aligning pads
adjustable with O-ring

02007
Page 121

Self-aligning pads
adjustable with O-ring and exchange-able inserts

02008
Page 125

Self-aligning pads
adjustable with O-ring and hexagon socket

02009
Page 126

Self-aligning pads
adjustable with O-ring, exchangeable inserts and hexagon socket

02010
Page 128, 1047

Rest pads

02020
Page 129

Locating pins and rest pads
DIN 6321 (Issue 1973)

02025
Page 130

Locating pins
with internal thread

02026
Page 131

Locating bushes
for locating pins

02027
Page 132

Rest pads
pin form, internal thread

02027
Page 133

Rest pads
pin form, external thread

02028
Page 134

Rest pads

02029
Page 135

Rest pads
with positioning pin

02030
Page 136

Feet with threaded pin,
DIN 6320 (Edition 1971)

02035
Page 136

Extension pieces

02037
Page 137

Support bolts

02040
Page 138

Positioning feet

02041
Page 141

Positioning feet

02050
Page 142

Fixture feet
with external thread

02070
Page 143

Fixture feet
with internal thread

02080
Page 144

Self-aligning pads
swivel 12°

02081
Page 147

Self-aligning pads
self-righting

02090
Page 148

Locating feet

02110
Page 148

Swivel pads

02130
Page 149

Rest pads

02150
Page 149

Rest pads adjustable
with locknut

02153
Page 150

Rest pads

New/Expanded Items

norelem positions

Flexible standard component system

02155
Page 151

Jack screws

02160
Page 152

Stop, adjustable
with end position feedback

02170
Page 153

Screw rest
with flat face, steel

02171
Page 153

Screw rest
with flat face, stainless steel

02180
Page 154

Screw rest
with flat face, aluminium

02182
Page 154

Screw rest
with flat face and magnetic foot,
aluminium

02190
Page 155

Atlas jack
with locknut

02210
Page 156

Screw rest inserts
spherical, centring disc, prism,
locating pin, revolving ball

02270
Page 158

Step blocks

02310
Page 158

Step block sets

02320
Page 159

Wedge supports

02330
Page 159

Support elements cylindrical

02333
Page 160

Workpiece supports
adjustable

02334
Page 161

Workpiece supports

02335
Page 162

Workpiece support cylinders

02340
Page 163

Support element

02350
Page 164

Rectangular support elements

02360
Page 164

Workpiece supports

02380
Page 165

Workpiece supports

02385
Page 166

Jack screws

02387
Page 166

Inserts

02388
Page 167

Jack screws extended

02390
Page 168

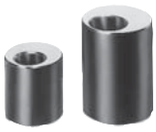

Eccentric supports

New/Expanded Items

norelem positions

Flexible standard component system

Spring plungers
Indexing plungers
Stops
Centring/positioning components
Ball lock pins
T-slot nuts

03000
Page 171

Spring plungers
with slot and ball, steel

03001
Page 172

Spring plungers
with slot and ball, LONG-LOK secured, steel

03004
Page 173

Spring plungers
with slot and POM ball

03008
Page 173

Spring plungers
with slot and ceramic ball, stainless steel

03010
Page 174

Spring plungers
with slot and ball, stainless steel

03011
Page 175

Spring plungers
with slot and ball, LONG-LOK secured, stainless steel

03014
Page 176

Spring plungers
plastic, with slot and stainless steel ball

03020
Page 177

Spring plungers
with slot and thrust pin, steel

03020
Page 178

Spring plungers
with end position feedback

03021
Page 179

Spring plungers
with slot and thrust pin, LONG-LOK secured, steel

03025
Page 180

Spring plungers
with slot and thrust pin, stainless steel

03026
Page 181

Spring plungers
with slot and thrust pin, LONG-LOK secured, stainless steel

03030
Page 182

Spring plungers
with hexagon socket and ball, steel

03031
Page 183

Spring plungers
with hexagon socket and ball, LONG-LOK secured, steel

03033
Page 184

Spring plungers
with hexagon socket and ceramic ball

03035
Page 185

Spring plungers
with hexagon socket and ball, stainless steel

03036
Page 186

Spring plungers
with hexagon socket and ball, LONG-LOK secured stainless steel

03040
Page 187

Spring plungers
with hexagon socket and thrust pin, long version

03040
Page 188

Spring plungers
with hexagon socket and thrust pin, steel

03041
Page 189

Spring plungers
with hexagon socket and thrust pin, LONG-LOK secured, steel

03050
Page 190

Spring plungers
with hexagon socket and POM thrust pin, steel

03051
Page 191

Spring plungers
with hexagon socket and POM thrust pin, LONG-LOK secured, steel

03055
Page 192

Spring plungers
with hexagon socket and thrust pin, stainless steel

03056
Page 193

Spring plungers
with hexagon socket and thrust pin, LONG-LOK secured, stainless steel

03058
Page 194

Spring plungers
with hexagon socket and POM thrust pin, stainless steel

03059
Page 195

Spring plungers
with hexagon socket and POM thrust pin, LONG-LOK secured, stainless steel

03060
Page 196

Spring plungers
with head

03065
Page 197

Spring plungers
with detent ring

03069
Page 198

Locators

03070
Page 198

Spring plungers
smooth version, extended, stainless steel

03070
Page 199

Spring plungers
smooth version, stainless steel

03071
Page 200

Spring plungers
smooth version, plastic

New/Expanded Items

03072
Page 201

Spring plungers
smooth version without collar,
stainless steel

03073
Page 201

Spring plungers
with head

03074
Page 202

Spring plungers
smooth version, double-sided

03075
Page 203

Double ball catch

03075-10
Page 204

Ball catch

03075-10
Page 204

Spacer for ball catch

03075-10
Page 205

Angle bracket for ball catch

03075-11
Page 206

Magnetic lock

03075-11
Page 207

Angle bracket for magnetic lock

03076
Page 208

Spring plungers,
smooth version, self-clamping, plastic

03077
Page 209

Spring plungers
smooth version

03080
Page 210

Eccentric stops

03081
Page 211

Clamp stops adjustable
for slot profiles

03083
Page 212

Stops
adjustable

03085
Page 212

Screw stops
adjustable

03086
Page 213

Stop screws

20010
Page 213, 1142

Stop screws

03087
Page 214

Stop screws

03088
Page 215

5D workpiece stops

03089
Page 217

Indexing plungers

03089
Page 219

Indexing plungers

03089
Page 221

Indexing plungers
with thread lock

03089
Page 223

Indexing plungers
with extended indexing pin

03089
Page 225

Indexing plungers
short version

03089
Page 227

Indexing plungers
short version

03089
Page 229

Indexing plungers
short version, with thread lock

03089
Page 230

Indexing plungers stainless steel

03089
Page 231

Indexing plungers
for thin-walled parts

03089
Page 232

Indexing plungers - Premium
with cylindrical pin

03089
Page 233

Bushes cylindrical

03089
Page 234

Indexing plungers - Premium
with tapered pin

03089
Page 235

Bushes tapered

03089
Page 236

Spacer rings

03089
Page 237

Indexing plungers ECO

03089
Page 238

Indexing plunger
with lock

03090
Page 241

Indexing plungers

New/Expanded Items

03090
Page 242

Indexing plungers
with locked mark

03090
Page 245

Indexing plungers
with T-grip

03090
Page 246

Indexing plungers ECO short version

03091
Page 247

Indexing plungers

03092
Page 249

Indexing plungers

03092
Page 251

Indexing plungers

03093
Page 253

Indexing plungers
without collar

03093
Page 255

Indexing plungers
without collar, extended indexing pin

03093
Page 257

Indexing plungers stainless steel
without collar

03094
Page 259

Indexing plungers
without collar

03095
Page 260

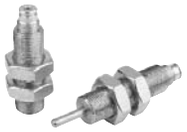

Indexing plunger, pneumatic

03096
Page 263

Indexing plungers
without collar

03096
Page 265

Indexing plungers
without collar

03097
Page 267

Indexing plungers
without collar

03098
Page 269

Indexing plungers
without collar

03098
Page 270

Indexing plungers
without collar

03099
Page 271

Cam-action indexing plungers

03099-20
Page 272

Cam action indexing plunger
with stop

03099
Page 274

Cam-action indexing plungers
stainless steel

03099-21
Page 275

Cam action indexing plunger
stainless steel, with stop

03099
Page 276

Mounting brackets
steel

03099-50
Page 277

Positioning bushes for indexing
plunger

03099
Page 279

Mounting brackets
aluminium

03099
Page 280

Cam-action indexing plungers

03099
Page 281

Cam-action indexing plungers
stainless steel

03102
Page 282

Barrel slide bolts

03105
Page 283

Locating pins removable
Form A and C

03106
Page 283

Locating pins removable
Form B and D

03107
Page 284

Locating pins
with ball-end Form A

03107
Page 284

Locating pins
with flattened ball-end Form C

03108
Page 285

Locating pins
with ball-end Form B

03108
Page 285

Locating pins
with flattened ball-end Form D

03110
Page 286

Centring pins
for central hole

03112
Page 286

Centring pins
for aligning hole

03114
Page 287

Centring pins
for aligning hole

03120
Page 288

Positioning pins cylindrical
ground

New/Expanded Items

03130
Page 288

Positioning pins cylindrical
not ground

03140
Page 289

Positioning pins free-milled
ground

03150
Page 289

Positioning pins free-milled
not ground

03151
Page 290

Locating pins expanding

03153
Page 292

Locating cylinder Ball Lock

03153
Page 293

Locating cylinders
with quick clamping system

03154
Page 294

Centring bushes

03155
Page 295

Receiver bushes
Form A (pressed in from rear)

03156
Page 295

Receiver bushes
Form B (screwed down from front)

03157
Page 296

Mandrel collets

03157
Page 297

Mandrel collets
with side lock

03158
Page 299

Centring clamps
with ball or hexagon segments

03158
Page 301

Centring clamps
with ball or hexagon segments

03159
Page 302

Ball-end locking screw
with rotating ball

03160
Page 303

Centring V

03161
Page 304

Locating cylinders
pneumatic

03162
Page 305

Locating bushes
for pneumatic locating cylinder

03163
Page 306

Machinable collets, square

03164
Page 308

Centring clamps
round

03165
Page 310

Centring clamps

03167
Page 311

Adapter for collet

03168
Page 312
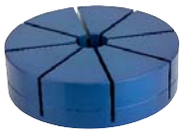
Collet
for external clamping

03168
Page 314

Collet
for internal clamping

03169
Page 319

Traction cone
for internal clamping collet

03180
Page 320

Centring V-plate

03182
Page 321

Indexing plungers - Precision
with tapered pin

03184
Page 321

Bushes tapered

03186
Page 322

Indexing plungers - Precision
with cylindrical pin

03188
Page 322

Bushes cylindrical

03190
Page 324

Indexing plunger
with five lobe grip

03193
Page 325

Ball lock pins
self-locking

03194
Page 326

Ball lock pins
self-locking, stainless steel

03195
Page 327

Locking pins

03195
Page 328

Locking pins with key ring

03196
Page 329

Ball lock pins
with T-grip, self-locking

03196
Page 330

Ball lock pins
with L-grip, self-locking

New/Expanded Items

03197
Page 331

Bushing for ball lock pins

03197
Page 332

Bushing for ball lock pins
with LONG-LOK thread lock

03198
Page 333

Safety cable

03199
Page 334

Key rings

03199
Page 335

Retaining cables

03199
Page 333

Safety spiral cable

03200
Page 336

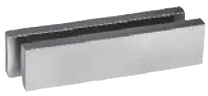

Parallel blocks pair
DIN 6346

03212
Page 337

Parallel block sets

03220
Page 337

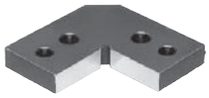

Positioning brackets

03240
Page 338

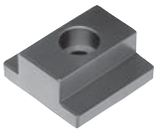

T-slot keys

03250
Page 338

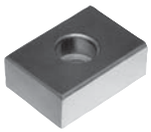

Slot keys

03252
Page 339

Elastic slot keys
Pat. No. 4200676

03260
Page 340

Slot keys loose
DIN 6323

03270
Page 340

Slot keys
with locating pin

03288
Page 341

Parallel keys
DIN 6885 A

03289
Page 342

Woodruff keys
DIN 6888

03290
Page 343

Carrier keys
DIN 2079

03315
Page 344

Roll dowel
heavy duty ISO 8752

03320
Page 345

Cylindrical pins
DIN 6325

03325
Page 345

Cylindrical pins with internal thread
DIN 7979

20240
Page 346, 1174

Centring rings

03328
Page 347

Extractor

03330
Page 349

Lateral spring plungers

03330
Page 348-350

Offset bushes and assembly tool
for lateral spring plungers.

03332
Page 351

Lateral spring plungers
without thrust pin

03334
Page 352

Lateral spring plungers
with threaded sleeve

03336
Page 354

Lateral spring plungers
with threaded sleeve, without thrust
pin

03338
Page 355

Push-Pull spring plungers

03339
Page 356

Push-Pull spring plungers
with rotation lock

03340
Page 357

Lateral spring plungers

03350
Page 358

Shaft clamping units

03400
Page 359

Locking pins
with folding latch

03410
Page 360

Locking pins
with axial locking

03415
Page 361

Ball lock pins
stainless steel, self-locking

03418
Page 362

Ball lock pins with mushroom knob
stainless steel, self-locking

03420
Page 363

Ball lock pins
self-locking

New/Expanded Items

03420
Page 364

Ball lock pins
with L-grip, self-locking

03420
Page 365

Ball lock pins
with T-grip, self-locking

03422
Page 366

Ball lock pins
with zinc L-grip, self-locking

03422
Page 367

Ball lock pins
with zinc T-grip, self-locking

New/Expanded Items

Clamp straps Clamping devices

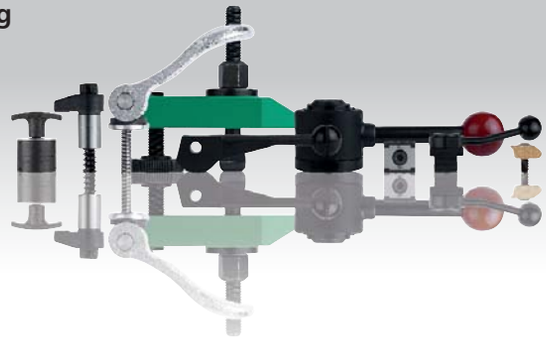

04010
Page 370

Clamp straps
slotted heel

04030
Page 371

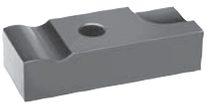

Clamp straps
swivel-heel

04050
Page 371

Clamp straps
tapped-heel

04070
Page 372

Clamp straps
stepped-heel, steel or aluminium

04080
Page 373

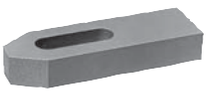

Clamp straps
DIN 6314 straight, steel or aluminium

04081
Page 374

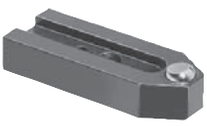

Clamp straps
with flattened ball

04088
Page 375

Clamp straps gooseneck
narrow, steel

04090
Page 376

Clamp straps gooseneck
DIN 6316 wide, steel or aluminium

04100
Page 377

Clamp straps
assorted, long slot

04110
Page 378

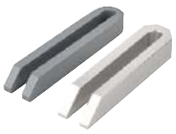

Clamp straps open U
DIN 6315, steel or aluminium

04130
Page 379

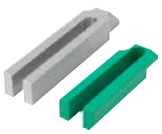

Clamp straps open U
flat pin, steel or aluminium

04131
Page 380

Clamp straps open-U
with pin and protective insert

04140
Page 381

Clamp straps pivot
strap only or assembly

04150
Page 382

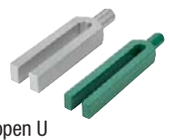

Clamp straps open U
DIN 6315 C, round pin, steel or aluminium

04170
Page 383

Clamp straps
hinge heel

04185
Page 383

Clamp straps mini
double sided

04190
Page 384

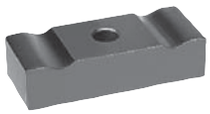

Clamp straps
double sided

04191
Page 385

Clamp straps
double-sided, 90° swivelling

04192
Page 386

Clamp strap assemblies

04193
Page 387

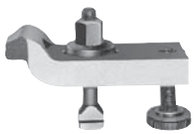

Clamp strap assemblies
goose-neck

04195
Page 387

Clamp springs

04200
Page 388

Clamp strap modules
compact

04203
Page 391

Clamp strap assemblies

04204
Page 392

Adjustable heel supports
for clamp strap assembly

04205
Page 393

Clamp straps pivot
steel

04210
Page 393

Clamp straps hinge heel
with bolt slot

04232
Page 395

Cam levers
internal and external thread, steel or stainless steel

04232
Page 396

Cam levers steel
with internal and external thread

04232
Page 399

Cam levers
internal and external thread, stainless steel

04232
Page 400

Cam levers
internal or external thread, stainless steel, thrust washer stainless steel

04232
Page 402

Cam levers with plastic handle
internal and external thread, steel or stainless steel

04233
Page 404

Cam levers adjustable
external thread, steel or stainless steel

New/Expanded Items

04233
Page 405

Cam levers adjustable
steel, with external thread

04233
Page 406

Cam levers adjustable
external thread, stainless steel

04233
Page 407

Cam levers adjustable
external thread, stainless steel,
thrust washer stainless steel

04233
Page 408

Cam levers adjustable with plastic
handle
external thread, steel or stainless
steel

04250
Page 409

Hinge pins

04270
Page 409

Spacer bolts

04290
Page 410

Cam levers single

04310
Page 410

Cam levers double

04330
Page 411

Cam clamps
with end lock

04350
Page 411

Cam clamps
with middle lock

04360
Page 412

Spiral cams

04362
Page 412

Door latch

04363
Page 414

Swing clamps
mini, with cam lever

04364
Page 415

Swing clamps mini

04366
Page 416

Swing clamps

04370
Page 417

Hook clamps

04370
Page 418

Hook clamp
with long clamp strap

04370
Page 419

Hook clamps
with protective insert

04371
Page 420

Hook clamps
with collar

04371
Page 421

Hook clamps
with collar and cam lever

04371
Page 422

Hook clamps
with collar and cam lever

04372
Page 423

Hook clamps ground
Form A/B/C

04373
Page 424

Hook clamps
with collar

04374
Page 425

Hook clamps
with mounting bracket

04375
Page 426

Hook clamp holders

04378
Page 427

Riser bars

04380
Page 428

Hook clamps precision

04390
Page 428

Swing clamps

04395
Page 429

Clamping bolts

04400
Page 430

Clamping pins

04400
Page 430

Clamping pins (high force)

04400
Page 431

Clamping screws

04400
Page 431

Clamping screws (high force)

04400
Page 433

Pull clamps

04400
Page 430-431

Pull clamps (high force)

04410
Page 437

Clamping element “actima”

New/Expanded Items

04420
Page 438

Floating clamp

04421
Page 439

Floating clamp
with separate workpiece clamp and interlock

04422
Page 440

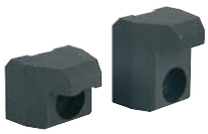

Clamping jaws
for floating clamps

04430
Page 442, 443

Clamping element “arness”

04431
Page 444

Fixture clamps machinable

04432
Page 444

Fixture clamps unequal hexagon

04433
Page 445

Spiral cam screws

04434
Page 446

Cam screws
with knife edge washer

04435
Page 446

Cam screws
with hexagon washer

04436
Page 447

Cam screws
with hexagon washer, for T-slots

04437
Page 448

Cam clamps
with riser

04439
Page 448

Toe clamps for T-slots

04440
Page 449

Talon grips

04440
Page 450

Talon grips round

04441
Page 451

Chock clamps

04444
Page 452

Cam clamps adjustable
with riser

04445
Page 453

Riser stops

04450
Page 454

Low-profile clamps

04470
Page 454

T-slot clamps

04480
Page 455

Side clamps

04485
Page 456

Side clamps
with rest pad

04500
Page 457

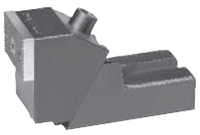

Side clamps robust

04509
Page 457

Side clamps

04512
Page 458

Seating blocks adjustable

04516
Page 459

Side clamps

04518
Page 460

Side clamps

04520
Page 461

Side clamps

04521
Page 462

Toe clamps compact

04522
Page 463

Wedge clamps

04523
Page 464

Wedge clamps
machinable

04524
Page 465

Wedge clamps
jaw face smooth or serrated

04524
Page 466

Wedge clamps
machinable

04525
Page 467

Wedge clamps
jaw faces serrated

04526
Page 468

Wedge clamps
machinable

04527
Page 469

Wedge clamps double
jaw faces serrated

04530
Page 471

Side clamps

New/Expanded Items

norelem positions

Flexible standard component system

04540
Page 472

Side stops

04562
Page 473

Side clamps

04565
Page 474

Side clamps

04567
Page 475

Wedge clamps

04570
Page 476

Toe clamps

04571
Page 477

Flat clamps

04575
Page 478

Side clamps

04578
Page 479

Side clamps

04610
Page 480

Swivel hold-down clamps
mini, with cam lever

04620
Page 481

Down-thrust clamps

04625
Page 482

Compact clamps

04626
Page 483

Riser blocks
with draw bolt

04629
Page 484

Power clamp

04630
Page 485

Risers
for power clamp

04631
Page 486

Thrust pads
for power clamp

04750
Page 487

Clamp nuts

04751
Page 488

Clamp nuts with star or T-grip

04752
Page 489

Tightening screws

New/Expanded Items

norelem positions

Flexible standard component system

05000

Toggle clamps
Pneumatic clamps
Accessories for clamps
Latches
Quarter-turn locks

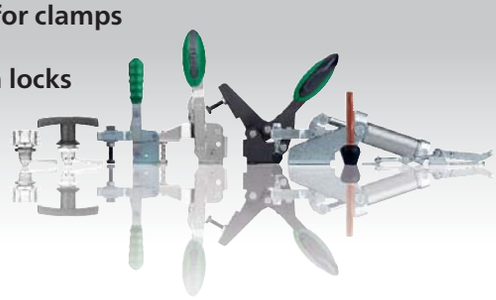

05020
Page 493

Toggle clamps vertical
with horizontal foot

05020
Page 494

Toggle clamps vertical
with horizontal foot and full clamping lever

05020
Page 495

Toggle clamps vertical
with horizontal foot, large version

05040
Page 496

Toggle clamps vertical
with straight foot

05040
Page 497

Toggle clamps vertical
with straight foot and full clamping lever

05060
Page 498

Toggle clamps vertical
with angled foot

05080
Page 499

Toggle hook clamps
and catch plate

05120
Page 500

Toggle clamps horizontal
with horizontal foot

05120
Page 500

Toggle clamps horizontal
large version

05130
Page 501

Toggle clamps horizontal
with straight foot

05140
Page 501

Toggle mini clamps

05160
Page 502

Toggle clamps horizontal
with push rod

05170
Page 503

Toggle clamps
with push rod push-pull operation, for
bracket mounting

05200
Page 504

Plastic grips

05220
Page 504

Thrust spindles spring mounted

05240
Page 505

Thrust screws
with thrust pad

05241
Page 505

Thrust screws
with thrust pad

05260
Page 506

Thrust screws neoprene

05280
Page 506

Protective caps

05300
Page 507

Toggle clamps variable horizontal
with horizontal foot

05302
Page 508

Toggle clamps variable vertical
with horizontal foot

05305
Page 509

Toggle clamps variable
with thrust rod

05310
Page 510

Adapter block
aluminium

05312
Page 511

Adapter plate
round

05331
Page 513

Pneumatic clamp

05340
Page 514

Pneumatic clamps push-rod

05350
Page 515

Pneumatic clamps vertical
heavy-duty version

05360
Page 516

Pneumatic clamps vertical
with vertical mounted cylinder

05400
Page 517

Toggle clamps heavy duty
vertical

05420
Page 518

Toggle clamps heavy duty version
straight foot

05520
Page 518

Plastic grips

05526
Page 519

Latches
with spring clip

New/Expanded Items

05530-05
Page 520

Latch stainless steel
DIN 3133

05531
Page 521

Latches
with draw bail

05536
Page 522

Latches
with draw bail

05547-05
Page 523

Latches with release
stainless steel

05550
Page 524

Latches adjustable
with swing bail

05552
Page 525

Latches adjustable

05560
Page 526

Adjustable latches
heavy-duty version

05561
Page 527

Quarter-turn locks compact

05561-02
Page 528

Quarter-turn lock, stainless steel

05562
Page 529

Quarter-turn locks compact
with wing grip

05564
Page 530

Quarter-turn locks compact
lockable

05566
Page 532

Quarter-turn locks

05566-03
Page 533

Quarter-turn locks
stainless steel, small version

05566-04
Page 535

Quarter-turn locks, stainless steel
long version

05566-05
Page 536

Quarter-turn locks
stainless steel, small version

05566-06
Page 537

Quarter-turn locks
lockable, stainless steel

05566-07
Page 538

Tongue for quarter-turn lock

05567
Page 539

Quarter-turn locks
polyamide

05568
Page 541

Quarter-turn locks
long version

05571
Page 542

Quarter-turn locks
with wing grip

05571-02
Page 543

Quarter-turn locks stainless steel
with T-grip

05572
Page 544

Quarter-turn locks
with T-grip

05573
Page 545

Quarter-turn locks
with L-grip

05574
Page 546

Compression latches

05575
Page 547

Compression latches
with adjustable tongue height

05576
Page 548

Quarter-turn locks
with cam tongue

05577
Page 549

Quarter-turn locks
free-turning

05578-02
Page 550

Quarter-turn security locks, stainless
steel

05584
Page 551

Dust caps

05585
Page 551

Opening grips

05586
Page 552

Keys
for quarter-turn locks

05587
Page 553

Quarter-turn locks
stainless steel

05588
Page 554

Quarter-turn locks
stainless steel, lockable

05589
Page 555

Quarter-turn locks
stainless steel with wing grip

05593
Page 556

Quarter-turn locks
stainless steel with T-grip

05593-01
Page 557

Quarter-turn locks
stainless steel with T-grip

New/Expanded Items

05594
Page 558

Quarter-turn locks
stainless steel with L-grip

05594-02
Page 559

Quarter-turn locks
stainless steel with L-grip

05595
Page 560

Quarter-turn locks
for sterile areas

05598
Page 561

Slam latches

05598
Page 562

Slam latch
with integrated safety function

05599
Page 563

Emergency openers

05610
Page 564
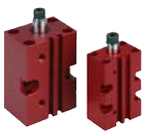
Swing clamps
pneumatic

05620
Page 565

Clamping arm
for swing clamp

05625
Page 565

Adapters
for swing clamp

05650
Page 569

Mini clamps

05652
Page 571

Mini clamp
manual operated

05665
Page 573

Mini clamp
for horizontal installation

05666
Page 574

Manual clamp vertical with hole
pattern on the front

05667
Page 575

Manual clamp vertical with hole
pattern on the front

05660
Page 576

Swing screws

05840
Page 577

Push-pull clamps
heavy-duty version with handle

05880
Page 578

Angle bracket

05882
Page 578

Plastic grips

05900
Page 581

Toggle clamps horizontal
with flat foot and adjustable clamping
spindle

05900
Page 582

Toggle clamps horizontal
with flat foot and adjustable clamping
spindle, stainless steel

05900
Page 583

Toggle clamps horizontal with safety
interlock with flat foot and adjustable
clamping spindle

05900
Page 584

Toggle clamps horizontal with safety
interlock with flat foot and adjustable
clamping spindle, stainless steel

05904
Page 585

Toggle clamps horizontal
with straight foot and adjustable
clamping spindle

05904
Page 586

Toggle clamps horizontal
with straight foot and adjustable
clamping spindle, stainless steel

05904
Page 587

Toggle clamps horizontal with safety
interlock with straight foot and adjustable
clamping spindle

05904
Page 588

Toggle clamps horizontal with safety
interlock with straight foot and adjustable
clamping spindle, stainless steel

05908
Page 591

Toggle clamps vertical
with flat foot and adjustable clamping
spindle

05908
Page 593

Toggle clamps vertical
with flat foot and adjustable clamping
spindle, stainless steel

05908
Page 595

Toggle clamps vertical
with safety interlock with flat foot and
adjustable clamping spindle

05908
Page 597

Toggle clamps vertical
with safety interlock with flat foot and
adjustable clamping spindle, stainless
steel

05912
Page 598

Toggle clamps vertical with straight foot
and adjustable clamping spindle

05912
Page 599

Toggle clamps vertical
with straight foot and adjustable clamping
spindle, stainless steel

05912
Page 600

Toggle clamps vertical
with safety interlock with straight foot and
adjustable clamping spindle

05912
Page 601

Toggle clamps vertical
with safety interlock with straight foot and
adjustable clamping spindle, stainless
steel

05990
Page 602

Spherical seating nuts

New/Expanded Items

Operating parts

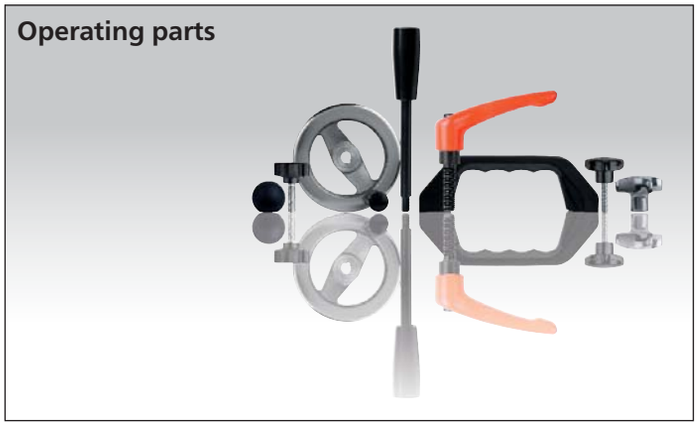

06010
Page 604

Knurled nuts
steel and stainless steel, DIN 6303

06013
Page 605

Knurled nuts
plastic

06030
Page 605

Knurled nuts quick-acting

06070
Page 606

Knurled nuts

06089
Page 606

Knurled screws low head
steel and stainless steel, DIN 653

06090
Page 607

Knurled screws high form
steel and stainless steel, DIN 464

06091
Page 607

Knurled thumb screws
plastic

06092
Page 608

Knurled knobs

06092
Page 609

Knurled knobs antistatic

06094
Page 610

Knurled knobs

06096
Page 611

Knurled knobs
aluminium

06097
Page 612

Knurled knobs

06100
Page 613

Knurled knobs

06105
Page 614

Knurled knobs
with arrow

06110
Page 615

Knurled nuts high
steel and stainless steel, DIN 466

06120
Page 615

Knurled nuts flat
steel and stainless steel, DIN 467

06130
Page 616

Knurled screws

06131
Page 617

Knurled knobs
for screws with hex head

06132
Page 618

Knurled heads
for hexagon socket screws

06133
Page 619

Wing grips
for hexagon socket screws

06134
Page 619

Disc grips
for hexagon socket screws

06140
Page 620

Tommy bars
with fixed or sliding T-bar, DIN 6305 or DIN 6307

06150
Page 621

T-thrust screws
with fixed or sliding T-bar, DIN 6304 or DIN 6306

06156
Page 622, 623

Palm grips
aluminium, similar to DIN 6335

06158
Page 625

Palm grips
stainless steel, similar to DIN 6335

06160
Page 626

Palm grips
grey cast iron DIN 6335

06161
Page 627

Palm grips
plastic coated grey cast iron, DIN 6335

06170
Page 627

Palm grips
with threaded spindle

06180
Page 628

Palm grips
similar to DIN 6335

06181
Page 629

Palm grips
similar to DIN 6335 metal parts
stainless-steel

06190
Page 630

Palm grips quick-acting
grey cast iron

06192
Page 632

Star grips
aluminium, similar to DIN 6336

New/Expanded Items

06194
Page 635

Star grips
stainless steel, similar to DIN 6336

06200
Page 636

Star grips
grey cast iron, DIN 6336

06208
Page 637

Star grips
similar to DIN 6336

06209
Page 638

Star grips
similar to DIN 6336, metal parts
stainless steel

06210
Page 641

Star grips
with projecting steel bush

06212
Page 642

Star grips
metal parts stainless steel, similar to
DIN 6336

06212
Page 643

Star grips with safety cable
metal parts stainless steel, similar to DIN
6336

06220
Page 644

Star grips
similar to DIN 6336

06220
Page 646

Star grips antistatic
similar to DIN 6336

06220
Page 649

Star grips with safety cable
similar to DIN 6336

06222
Page 650

Star grips quick-acting

06230
Page 650

Four-spoked nuts

06235
Page 651

Capstan wheel

06237
Page 652

Knobs flat

06240
Page 653

Mushroom knobs
with internal thread

06241
Page 654

Mushroom knobs
internal thread

06241
Page 655

Mushroom knobs antistatic
internal thread

06242
Page 656

Mushroom knobs
external thread

06242
Page 657

Mushroom knobs antistatic
external thread

06245
Page 658

Spherical knobs

06246
Page 659

Spherical knobs
revolving

06247
Page 660

Ball knobs
thermoplastic DIN 319 enhanced

06247
Page 661

Ball knobs
stainless steel or aluminium DIN 319

06250
Page 662

Ball knobs smooth
DIN 319 enhanced

06251
Page 664

Tapered knobs

06252
Page 664

Conical knobs

06253
Page 665

Five lobe grips

06255
Page 666

Handwheels 2-spoke
plastic

06255
Page 667

Handwheels 2-spoke
plastic, with revolving grip

06255
Page 668

Handwheels 2-spoke
plastic, with folding grip

06262
Page 669

Handwheels

06263
Page 670

Handwheels
with revolving grip

06264
Page 671

Handwheels
with fold-away grip

06265
Page 673

Handwheels
with safety grip

06266
Page 674

Knurled knobs

06267
Page 676

Knurled knobs
metal parts stainless steel

New/Expanded Items

06268
Page 677

Knurled knobs
with grip

06271
Page 678

Handwheels
DIN 950, grey cast iron

06273
Page 680

Handwheels
DIN 950, aluminium

06274
Page 682

Handwheels
DIN 950, stainless steel

06275
Page 684

Handwheels disc
aluminium

06275
Page 686

Handwheels disc
aluminium

06276-01
Page 688

Disc handwheels stainless steel
with revolving grip

06277
Page 690

Handwheels 2-spoke
aluminium, flat wheel rim

06277
Page 692

Handwheels 2-spoke
flat rim, aluminium

06279
Page 694

Handwheels disc
similar to DIN 950, aluminium

06287
Page 695

Handwheels disc
with revolving grip

06288
Page 696

Handwheels disc
without grip

06290
Page 697

Machine handles fixed
steel, similar to DIN 39

06291
Page 697

Machine handles fixed
steel, DIN 39 Form E

06292
Page 698

Machine handles fixed
aluminium, DIN 39 Form E

06293
Page 698

Machine handles, fixed,
DIN 39 Form E, stainless steel

06308
Page 699

Machine handles revolving
similar to DIN 98 Form E, steel

06309
Page 699

Machine handles revolving
aluminium, similar to DIN 98 Form E

06309-01
Page 700

Machine handles
revolving similar to DIN 98 Form
E, stainless steel

06310
Page 701

Machine handles revolving
steel, similar to DIN 98

06311
Page 701

Machine handles fixed
straight form, similar to DIN 39

06312
Page 702

Machine handles revolving
straight form, similar to DIN 98

06313
Page 702

Machine handles revolving

06314
Page 703

Conical grip
revolving

06315
Page 703

Taper grips
fixed

06316
Page 704

Taper grips
revolving

06316
Page 704

Taper grips
revolving

06317
Page 705

Cylindrical grips revolving
stainless steel

06318
Page 705

Conical grips
revolving

06319
Page 706

Taper grips

06320
Page 707

Taper grips

06321
Page 708

Cylindrical grips revolving
with hexagon socket

06322
Page 708

Cylindrical grips revolving

06323
Page 709

Cylindrical grips fold-down

06325
Page 710

Cylindrical grips revolving

06326
Page 711

Cylindrical grips fold-down

New/Expanded Items

06328
Page 712

Cylindrical grips
safety automatic return

06330
Page 713

Levers 20°
DIN 99

06340
Page 714

Tension lever

06342
Page 715

Tension lever flat

06349
Page 716

Lock grips

06350
Page 716

Tension levers

06353
Page 717

Ball grips revolving

06355
Page 718

Handles screw-in

06357
Page 718

Handles screw-in
with torque limit

06360
Page 719

Handles

06362
Page 720

Clamp hubs

06370
Page 721

Tension levers
internal thread

06371
Page 722

Tension levers
internal thread, stainless steel

06380
Page 723

Tension levers
external thread

06381
Page 724

Tension levers
external thread, stainless steel

06382
Page 725

Tension levers safety
internal thread

06383
Page 726

Tension levers safety
external thread

06390
Page 727

Tension levers flat
internal thread

06391
Page 728

Tension levers flat
internal thread, stainless steel

06400
Page 729

Tension levers flat
external thread

06401
Page 730

Tension levers flat
external thread, stainless steel

06410
Page 731

Clamping levers
internal thread

06411
Page 732

Clamping levers
internal thread, steel parts
stainless steel

06420
Page 733

Ball handles
DIN 6337

06430
Page 733

Clamping levers

06430
Page 734

Clamping levers
external thread

06431
Page 735

Clamping levers
external thread, steel parts
stainless steel

06440
Page 736

Clamping levers
internal thread, steel

06440
Page 737

Clamping levers
internal thread, stainless steel

06441
Page 738

Clamping levers
external thread

06441
Page 739

Clamping levers
external thread, stainless steel

06442
Page 740

Clamping levers
internal thread, steel

06443
Page 741

Clamping levers
external thread, steel

06448
Page 742

Clamping levers flat
internal thread

06449
Page 743

Clamping levers flat
internal thread, steel parts stainless
steel

06450
Page 744

Clamping levers
internal thread

New/Expanded Items

06450
Page 745

Clamping levers with protective cap
internal thread

06451
Page 746

Clamping levers
internal thread, steel parts stainless steel

06451
Page 747

Clamping levers with protective cap
internal thread, steel parts stainless steel

06454
Page 748

Clamping levers
with internal thread, stainless steel

06454
Page 749

Clamping levers with protective cap
with internal thread, stainless steel

06458
Page 750

Clamping levers flat
external thread

06459
Page 751

Clamping levers flat
external thread, steel parts stainless steel

06460
Page 752

Clamping levers
external thread

06460
Page 753

Clamping levers with protective cap
external thread

06461
Page 754

Clamping levers
external thread, steel parts stainless steel

06461
Page 755

Clamping levers with protective cap with
external thread, metal parts stainless steel

06464
Page 756

Clamping levers
with external thread, stainless steel

06464
Page 757

Clamping levers with protective cap
with external thread, stainless steel

06470
Page 759

Ratchet levers

06480
Page 760

Crank handles offset
similar to DIN 468

06490
Page 761

Crank handles straight
similar to DIN 469

06492
Page 762

Crank handles
aluminium

06500
Page 763

Crank handles
with fold-away grip

06500
Page 764

Crank handles
with revolving grip

06502
Page 765

Crank handles
with safety grip

06503
Page 766

Crank handles aluminium
cylindrical revolving grip

06503
Page 767

Crank handles aluminium
with fold-away cylinder grip

06504
Page 768

Crank handles aluminium
with safety cylinder grip

06505
Page 769

Crank handles stainless steel
cylindrical revolving grip

06510
Page 770

Crank handles balanced

06550
Page 770

Bar knobs

06600
Page 772

Clamping levers with plastic handle
internal thread

06600
Page 773

Clamping levers with push button
internal thread

06600
Page 774

Clamping levers antistatic
internal thread, plastic grip

06601
Page 775

Clamping levers with plastic handle
internal thread, metal parts stainless steel

06601
Page 776

Clamping levers with push button
internal thread, metal parts stainless steel

06610
Page 777

Clamping levers with plastic handle
external thread

06610
Page 778

Clamping levers with push button
with external thread

06610
Page 779

Clamping levers antistatic
external thread, plastic grip

06611
Page 780

Clamping levers
with plastic handleexternal thread, metal
parts stainless steel

06611
Page 781

Clamping levers
with push button external thread, metal
parts stainless steel

New/Expanded Items

06612
Page 783

Clamping levers with thrust pad

06620
Page 784

Clamping joints

06621
Page 785

Clamping joints
individually adjustable

06622
Page 786

Multiple connectors

06648
Page 787

T-grips
stainless steel

06649
Page 788

T-grips

06650
Page 789

T-grips

06651
Page 790

Wing grips
internal thread, stainless steel

06652
Page 791

Wing grips

06652
Page 792

Wing grips
with tapped through bush

06652
Page 793

Wing grips antistatic

06652
Page 794

Wing grips "Miniwing"

06652
Page 795

Wing grips "Miniwing"
with tapped through bush

06652
Page 796

Wing grips "Miniwing" antistatic

06660
Page 797

Wing grips one-sided

06665
Page 798

Wing grips

06666
Page 799

Grip nuts

06666
Page 800

Grip screws

06699
Page 801

Triangular grips

06702
Page 802

Triangular grips
with high collar

06830
Page 803

Handwheels

06850
Page 804

Five lobe grips

06853
Page 805

Five lobe grips

06895
Page 806

Pull handles

06900
Page 806

Pull handles

06900
Page 807

Pull handles

06901
Page 807

Pull handles

06902
Page 808

Pull handles

06903
Page 809

Pull handles

06903
Page 810

Pull handles
high temperature resistant

06903
Page 811

Pull handles antistatic

06904
Page 812

Pull handles

06907
Page 813

Pull handles arch

06909
Page 814

Pull handles arch

06910
Page 814

Pull handles

06911
Page 815

Pull handles arch

New/Expanded Items

norelem positions

Flexible standard component system

06000

06912
Page 815

Pull handles
oblique

06913
Page 816

Pull handles
with soft inner face

06914
Page 817

Pull handles stainless steel

06915
Page 817

Pull handles

06916
Page 818

Pull handles

06916-01
Page 819

Pull handles

06916-01
Page 820

Pull handles
high temperature resistant

06917
Page 821

Pull handles round

06918
Page 822

Pull handles oval

06919
Page 823

Pull handles round

06920
Page 824

Pull handles oval

06920
Page 825

Pull handles oval

06920
Page 826

Pull handles oval
detachable

06921
Page 828

Pull handles

06922
Page 828

Pull handles
stainless steel

06923
Page 829

Pull handles angled

06924
Page 829

Pull handles
stainless steel

06925
Page 830

Pull handles tubular

06926
Page 830

Pull handles tubular

06927
Page 831

Pull handles tubular

06928
Page 832

Pull handles tubular
oblique

06929
Page 833

Pull handles

06930
Page 834

Pull handles
high-gloss chromed

06931
Page 835

Pull handles
stainless steel

06932
Page 836

Pull handles

06932
Page 837

Pull handles

06933
Page 838

Pull handles tubular

06933
Page 838

Pull handles

06934
Page 839

Pull handles fold-down

06935
Page 840

Pull handles angled

06936
Page 840

Pull handles tubular angled

06937
Page 841

Pull handles tubular

06938
Page 841

Pull handles tubular

06939
Page 842

Pull handles tubular

06940
Page 843

Pull handles tubular

06941
Page 844

New/Expanded Items

norelem positions

Flexible standard component system

06942
Page 845

Pull handles tubular

06943
Page 846

Pull handles tubular stainless steel

06944
Page 847

Pull handles

06945
Page 847

Pull handles angled

06946
Page 848

Pull handles

06947
Page 849

Pull handles tubular
adjustable

06951
Page 850

Ledge handles stainless steel

06952
Page 851

Ledge handles

06956
Page 852

Tubular handles angled

06958
Page 853

Tubular handles

06959
Page 854

Pull handles
open-ended screw on

06960
Page 855

Recessed handles

06961
Page 856

Recessed handles fold-down

06961-01
Page 857

Recessed handles
fold-down, stainless steel

06962
Page 858

Recessed handles fold-down

06965
Page 859

Recessed handles

06966-01
Page 860

Recessed grips
clip-in

06970
Page 861

Recessed handles fold-down
stainless steel

06970-01
Page 862

Recessed handles, fold down
DIN 3136

06975
Page 863

Pull handles angled

New/Expanded Items

Fasteners
Ball-end thrust screws
Thrust screws and thrust pads
Grippers
Torque bolts
Threaded inserts
Lifting bolts
Swivel bales
Ring bolts

07020
Page 867

Studs

07030
Page 868

Studs
DIN 6379

07040
Page 870

T-slot bolts
DIN 787

07040
Page 872

T-slot bolts
DIN 787, 12.9

07060
Page 873

Nuts for T-slots
DIN 508 enhanced

07061
Page 874
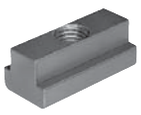
Nuts for T-slots
long

07070
Page 874

Nuts for T-slots
blanks

07071
Page 875

Slot nuts
twist-in Type I

07073
Page 876

Slot nuts
twist-in, keyed Type I

07075
Page 877

Slot nuts
strong Type I

07076
Page 877

Slot key profile
type I

07077
Page 878

Slot nuts
twist-in Type B

07078
Page 878

Slot nuts
twist-in with spring Type B

07080
Page 879

Nuts for T-slots
rhombic form

07090
Page 880

T-nuts

07094
Page 881

Hammer-head screws

07100
Page 882

Ball-end thrust screws with head

07101
Page 884

Ball-end thrust screws with head
stainless steel

07105
Page 885

Ball-end thrust screws without head
with full ball, LONG-LOK secured

07105
Page 886

Ball-end thrust screws without head
with flattened ball LONG-LOK secured

07109
Page 887

Ball-end thrust screws without head
short version

07110
Page 888

Ball-end thrust screws without head
with full ball

07110
Page 891

Ball-end thrust screws without head
with flattened ball

07110
Page 892

Ball-end thrust screws without head
with flattened ball and rotation lock

07111
Page 893

Ball-end thrust screws without head
stainless steel with full ball

07111
Page 894

Ball-end thrust screws without head
stainless steel with flattened ball

07111
Page 895

Ball-end thrust screws without head
stainless steel with flattened ball and
rotation lock

07112
Page 896
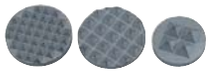
Gripper pads round
carbide

07113
Page 899

Grippers and inserts round

07113
Page 900

Grippers and inserts round
with counterbore

07114
Page 901

Grippers hexagonal

07115
Page 902

Grippers square

New/Expanded Items

07116
Page 903
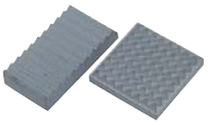
Gripper pads square
carbide

07117
Page 904

Grippers adjustable

07119
Page 905

Thrust screws

07119
Page 906

Thrust screws stainless steel

07119
Page 907

Thrust screws
LONG-LOK secured

07120
Page 908

Grub screws
with thrust point DIN 6332

07121
Page 908

Grub screws
with ball thrust point

07122
Page 909

Thrust screws
with point

07123
Page 910

Thrust screws
with radiused half-dog point

07124
Page 911

Torque grips
precision version

07125
Page 912

Knurled torque knobs

07126
Page 913

Triangular torque grips

07130
Page 914

Torque screws
with thrust point

07131
Page 914

Torque screws
with slot coupling

07132
Page 915

Torque screws
with support pin

07133
Page 915

Torque grips

07134
Page 916

Torque screws
with ball thrust points

07138
Page 916

Thrust pads

07140
Page 917

Thrust pads
DIN 6311 enhanced

07141
Page 917

Thrust pads
with retaining pin

07142
Page 918

Thrust pads

07143
Page 919

Thrust spindles

07144
Page 920

Swivel feet

07159
Page 921

Socket head screws full thread, DIN
912 / DIN EN ISO 4762

07160
Page 922

Socket head screws DIN 912 / DIN EN
ISO 4762, steel or stainless steel

07160
Page 924

Socket head screws
DIN 912/DIN EN ISO 4762

07160
Page 925

Socket head screws
DIN 912 / EN ISO 4762, LONG-LOK
secured

07161
Page 927

Socket head screws
low head DIN 6912

07165
Page 928

Grub screws with flat point
hexagon socket DIN 913

07166
Page 929

Grub screw with hexagon socket and
pointed end DIN 914 / DIN EN ISO 4027

07170
Page 930

Hexagon head bolts
DIN 931/DIN EN ISO 4014/DIN EN 24014

07171
Page 932

Hexagon head bolts
DIN 933

07172
Page 934

Hexagon head bolts with flange
EN 1665

07173
Page 935

Hexagon head bolts
with serrated flange

07174
Page 936

Button head screws
EN ISO 7380

07175
Page 938

Screws with countersunk head
hexagon socket DIN EN ISO 10642

New/Expanded Items

07180
Page 939

Eye bolts
DIN 444, Form B

07199
Page 940

Wing screws
DIN 316

07200
Page 941

Wing nuts
DIN 315

07210
Page 942

Hexagon nuts
DIN 934/DIN EN ISO 4032/DIN EN 24032

07212
Page 943

Hexagon nuts
thin type DIN 439

07213
Page 944

Hexagon nuts with polyamide thread
lock high type, DIN 982

07214
Page 945

Hexagon nuts with polyamide thread
lock thin type, DIN 985

07215
Page 946

Hexagon nuts with thread lock
DIN 980

07216
Page 947

Hexagon nut
with serrated flange

07217
Page 948

Hexagon nuts with flange
EN 1661

07218
Page 949

Hexagon nuts with flange

07220
Page 949

Extension nuts
height 3xD

07221
Page 950

Turnbuckle nuts
steel tube, closed form DIN 1478

07222
Page 951

Turnbuckle nuts
hexagonal DIN 1479

07240
Page 952

Hexagon nuts with collar
height 1.5xD, DIN 6331 enhanced

07242
Page 953

Hexagon nuts
with no-loss washer

07260
Page 954

Hexagon nuts
height 1.5xD, DIN 6330 enhanced

07265
Page 955

Hexagon nuts
with spherical seat

07280
Page 956

Hexagon domed cap nuts
similar to DIN 1587

07300
Page 956

Washers
medium DIN EN ISO 7089 A

07303
Page 957

Conical spring washers
DIN 6796

07304
Page 958

Spring washers
DIN 137 B

07305
Page 959

Washers large OD
DIN 9021

07310
Page 960

Lock washer self-locking
DIN 25201

07320
Page 962

Washers for clamps
steel or aluminium DIN 6340

07330
Page 965

Circlips for shafts
DIN 471

07331
Page 966

Circlips for bores
DIN 472

07332
Page 967

Circlips E-type
DIN 6799

07336
Page 968

Split pins
EN ISO 1234

07337
Page 969

R-clips
DIN 11024

07360
Page 970

Disc springs
DIN EN 16983

07375
Page 971

Handwheel washers

07380
Page 972

C-washers
DIN 6372 enhanced

07415
Page 973

Clamping force intensifiers

07420
Page 974

Spherical washers
DIN 6319, edition 10/01

07460
Page 976

Spherical levelling washers

New/Expanded Items

07520
Page 976

C-washers captive
DIN 6371

07522
Page 977

Shim washers
DIN 988

07523
Page 978

Spacer washers ground

07530
Page 978

Shoulder screws with slotted flat head
DIN 923

07533
Page 979

Shoulder screws Form B

07534
Page 980

Shoulder screws
similar to DIN ISO 7379

07535
Page 981

Shoulder screws
with hexagon head DIN 609

07540
Page 982

Shoulder screws
with slotted domed head

07560
Page 982

Snapper catch with spring
DIN 6310

07570
Page 983

Quarter-turn screws

07590
Page 984

Slotted round nuts
DIN 1804

07595
Page 985

Slotted nuts
with elastic lock

07598
Page 986-987

Adjustment nuts

07620
Page 988

Clevis
with external thread

07630
Page 988

Grub screws
DIN 551

07640
Page 989

Threaded rods
steel and stainless steel DIN 976-1

07650
Page 989

Springs
for clamp straps

07645
Page 990

HeliCoil®plus threaded inserts

07652
Page 992

Threaded inserts self-tapping
with cutting slot

07652
Page 993

Assembly tools
for self-tapping threaded inserts

07653
Page 994

Threaded inserts self-tapping
with cutting bores

07660
Page 995

Threaded inserts

07661
Page 996

Threaded inserts reinforced

07662
Page 997

Threaded inserts solid body

07663
Page 998

Threaded inserts
with internal thread, self-locking

07664
Page 999

Threaded inserts reinforced
internal thread, self-locking

07666
Page 1000

Repair kit

07670
Page 1002

Studs
with screw-in stop for gluing in

07680
Page 1004

Ring bolts
DIN 580 / stainless steel similar to
DIN 580

07680-01
Page 1004

Ring bolts
similar to DIN 580

07690
Page 1005

Ring nuts DIN 582
stainless steel similar to DIN 582

07690-01
Page 1005

Ring nuts
similar to DIN 582

07695
Page 1006

Ring bolts rotatable
high-strength grade 10

07710
Page 1007

Ring bolts
swivel and 360° rotatable, grade 8

07715
Page 1008

Bow shackles

07716
Page 1009

D-shackles

New/Expanded Items

07720
Page 1010

Weld-on D-rings

07725
Page 1011

Hoist rings 360° rotation
grade 10

07730
Page 1012

Hoist rings

07735
Page 1013

Hoist rings with Envirolox® coating

07750
Page 1013

Lifting rings

07752
Page 1014

Swivel bales
with axial ring

07770
Page 1015

Hoist rings

07772
Page 1016

Flip-Flop hoist rings

07774
Page 1017

Hoist rings

07775
Page 1018

Swivel bales

07780
Page 1019

Lifting pins
self-locking

07780
Page 1020

Lifting pins
self-locking, stainless steel

07781
Page 1021

Receiver bushes
for ball lifting pins, stainless steel

07781
Page 1022

Locating bushes
for ball lifting pins stainless steel, flat

07782
Page 1023

Lifting pins
self-locking, stainless steel

07784
Page 1024

Receiver bush
stainless steel, for lifting pins

07790
Page 1025

Lifting bolts with ring lock

07791
Page 1026

Slip hooks
grade 10

07792
Page 1027

Self-locking hooks
grade 10

07793
Page 1028

Shortening hooks
grade 10

07794
Page 1029

Swivel hooks
grade 10

07795
Page 1030

Connecting links
grade 10

07796
Page 1031

Round sling hooks
grade 8

07797
Page 1032

Round sling links
grade 8

07800
Page 1033

Shaft collars set screw
DIN 705, steel

07800
Page 1034

Shaft collars set screw
DIN 705, stainless steel

07810
Page 1035

Shaft collars one-piece

07810
Page 1036

Shaft collar
one-piece, with clamping lever

07811
Page 1037

Shaft collars one-piece
wide

07812
Page 1038

Shaft collars two-piece

07813
Page 1039

Shaft collars two-piece
wide

07814
Page 1040

Shaft collars
with thread

07815
Page 1041

Shaft collars
wide, for flat-milled shafts

New/Expanded Items

Drilling jigs
Drill bushes
Jig elements

08000
Page 1044

Drilling plates

08050
Page 1044

Hinge blocks long

08100
Page 1045

Hinge blocks short

08150
Page 1046

Latch

02010
Page 128, 1047

Rest pads

08180
Page 1048

Thrust washers

08270
Page 1048

Drilling plates
with short hinge block

08280
Page 1049

Drilling plates
with long hinge block

08300
Page 1049

Handle
for drilling jigs

08550
Page 1052

Drilling jigs size 0 to 3 S
DIN 6348 enhanced

08550
Page 1053

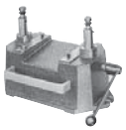

Drilling jigs size 3 to 5
DIN 6348

08570
Page 1054

Drilling plates
DIN 6348 enhanced

08580
Page 1055

Base plates
DIN 6348

08600
Page 1056

Extension columns
short

08610
Page 1056

Extension columns
long

08630
Page 1058

Drilling jigs for cylindrical parts

08640
Page 1059

Index drilling discs
for drilling jig for cylindrical parts

08650
Page 1060

Drill bush holder plates
for drilling jig for cylindrical parts

08710
Page 1061

V-blocks
with stop

08900
Page 1062

Drill bushes cylindrical
DIN 179

08910
Page 1063

Drill bushes with collar
DIN 172

08920
Page 1064

Drill bushes push-in
DIN 173

08920
Page 1065

Drill bushes push-in
DIN 173-1

08926
Page 1066

Drill bush clamps
DIN 173-1

08927
Page 1066

Shoulder screws flathead
for DIN 173 drill bushes

New/Expanded Items

Magnets

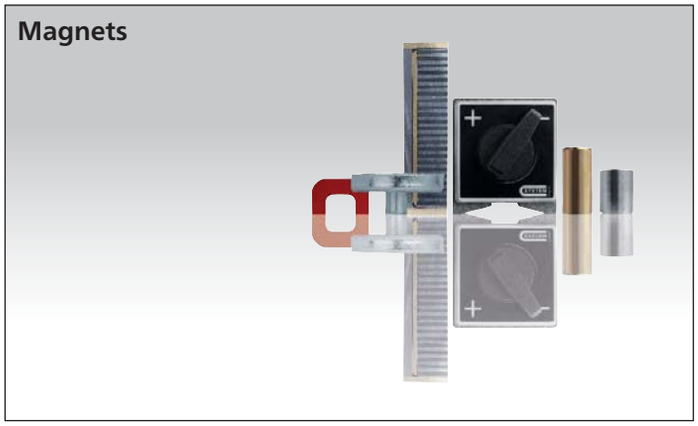

09060
Page 1068

Permanent workholding magnets
with fine pole division

09060
Page 1069

Magnets deep pot
AlNiCo with fitting tolerance

09061
Page 1070

Magnets deep pot
AlNiCo without fitting tolerance

09063
Page 1071

Magnets deep pot with pin
AlNiCo

09064
Page 1071

Magnets shallow pot
hard ferrite

09065
Page 1072

Magnets shallow pot with thread
hard ferrite

09066
Page 1072

Magnets shallow pot
SmCo

09067
Page 1073

Magnets deep pot
SmCo

09068
Page 1073

Magnets deep pot with internal thread
NdFeB

09069
Page 1074

Magnets shallow pot
NdFeB

09070
Page 1075

Magnets shallow pot with counterbore
hard ferrite

09071
Page 1075

Magnets shallow pot with countersink
hard ferrite

09072
Page 1076

Magnets shallow pot with internal
thread NdFeB

09094
Page 1076

Magnets deep pot

09096
Page 1077

Magnets shallow pot

09098
Page 1077

Magnets button

09100
Page 1078

Magnets strong

09110
Page 1078

Protective rubber caps
for shallow pot magnets

09112
Page 1079

Magnets shallow pot with internal thread
NdFeB, with rubber protective jacket

09114
Page 1079

Magnets shallow pot with tapped pin
NdFeB, with rubber protective jacket

09116
Page 1080

Magnets shallow pot with threaded pin
NdFeB, with rubber protective jacket

09118
Page 1080

Magnets shallow pot
with through hole NdFeB, with rubber
protective jacket

09150
Page 1081

Magnetic Pickup

09210
Page 1081

Magnetic base permanent

New/Expanded Items

Aluminium profiles
Connectors
Covers
Special elements

10025
Page 1085

Aluminium profiles 30x30 light
Type I

10025
Page 1085

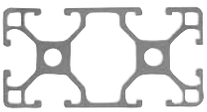

Aluminium profiles 30x60 light
Type I

10025
Page 1086

Aluminium profiles 60x60 light
Type I

10045
Page 1087

Aluminium profiles 40x40 light
Type I

10045
Page 1087

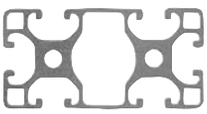

Aluminium profiles 40x80 light
Type I

10045
Page 1088

Aluminium profiles 80x80 light
Type I

10048
Page 1089

Aluminium profiles 16x40
Type I

10048
Page 1089

Aluminium profiles 40x40
Type I

10048
Page 1090

Aluminium profiles 40x80
Type I

10048
Page 1090

Aluminium profiles 80x80
Type I

10050
Page 1091

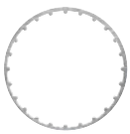

Aluminium profiles D50
type I, tube

10140
Page 1092

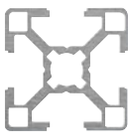

Aluminium profiles 30x30
Type B

10140
Page 1092

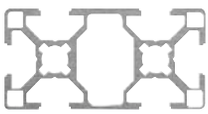

Aluminium profiles 30x60
Type B

10142
Page 1093

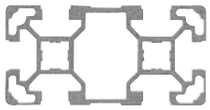

Aluminium profiles 40x40 light
Type B

10142
Page 1093

Aluminium profiles 40x80 light
Type B

10157
Page 1094

Aluminium profiles 45x45 light
Type B

10157
Page 1094

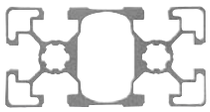

Aluminium profiles 45x90 light
Type B

10157
Page 1095

Aluminium profiles 90x90 light
Type B

10160
Page 1096

Aluminium profiles 45x45
Type B

10160
Page 1096

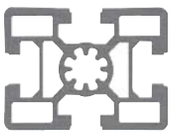

Aluminium profiles 45x60
Type B

10160
Page 1097

Aluminium profiles 45x90
Type B

10160
Page 1097

Aluminium profiles 90x90
Type B

10200
Page 1098

Connecting sets standard
Type I

10202
Page 1099

Connecting sets universal
Type I

10204
Page 1100

Connecting sets central
Type I

10205
Page 1101

Connecting sets central
Type B

10206
Page 1102

Connecting sets central
Type B

10210
Page 1103

Connecting sets automatic
Type I

10212
Page 1104

Connecting sets automatic
Type B

10215
Page 1105

Pin connector sets
Type B

10220
Page 1106

Cube connector sets
Type B

10228
Page 1107

Central screws
Type B

New/Expanded Items

10230
Page 1108

Butt connector sets automatic
Type I

10240
Page 1109

Straps

10242
Page 1109

Angles

10244
Page 1110

Fastening sets
for straps und angles

10250
Page 1111

Angle sets
Type I

10252
Page 1112

Angle sets
Type B

10260
Page 1113

Angle elements T1
Type I

10261
Page 1114

Angle elements T2
Type I

10265
Page 1115

Clamping angles
Type I

10266
Page 1116

Joint angles
Type I

10270
Page 1119

Joints
Type B and Type I

10300
Page 1120

End caps
Type B and Type I

10315
Page 1121

Cover and adapter profiles
Type B and Type I

10320
Page 1122

Cover profiles
Type I

10330
Page 1122

Slide rails
Type I

10347
Page 1124

Foot plates
Type B and Type I

10400
Page 1126

Bearing flange
for feed roller

10450
Page 1127

Roller elements

10451
Page 1128

Cable tie block

10453
Page 1128

Cable clips

10454
Page 1129

Cable clips with T-slot key

10460
Page 1130

Sensor holders

10470
Page 1131

Earthing terminal
type I

10471
Page 1131

Potential equaliser
type I

10500
Page 1132

Eccentric clamp modules

10505
Page 1134

Cam clamp
for eccentric clamp modules

New/Expanded Items

Slides
Guide rails
Positioning tables
Linear guide systems
Position indicators

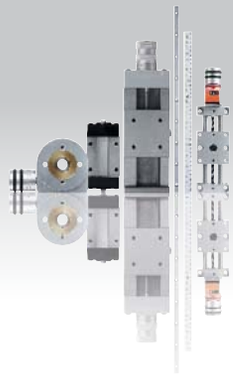

21000
Page 1139

Dovetail slides
with micrometer spindle

21000
Page 1140

Straps

21000
Page 1140

Fastening screws
for cross table mounting

21030
Page 1141

Dovetail slides

21031
Page 1142
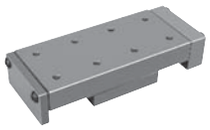
Dovetail slides
with end plates

21032
Page 1143

Dovetail slides
with micrometer spindle

21033
Page 1144

Dovetail slides
with micrometer spindle and handwheel

21034
Page 1145

Precision slides
roller mounted

21035
Page 1146
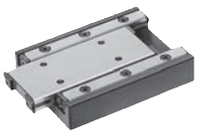
Slides mini
roller mounted

21038
Page 1147

Precision slides
roller mounted with end plates

21040
Page 1148

Precision slides
roller mounted with micrometer spindle

21050
Page 1149

Guide rails
with cross rollers

21052
Page 1150

Roller cages
for guide rails

21080
Page 1152

Positioning tables short
with coaxial electric drive

21081
Page 1154

Positioning tables short
with lateral electric drive

21082
Page 1156

Positioning tables long
with coaxial electric drive

21083
Page 1158

Positioning tables long
with lateral electric drive

21085
Page 1160

Positioning tables rotary
with coaxial electric drive

21086
Page 1163
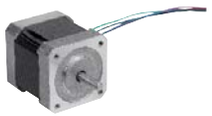
Stepper motor

21088
Page 1165

Stepper motor
with integrated positioning control

21090
Page 1167

Mounting plates horizontal

21091
Page 1168

Mounting plates vertical

21093
Page 1170

Sensor holder

21094
Page 1171

Sensor holder

21100
Page 1172

Positioning tables short

21102
Page 1173

Positioning tables short
with position indicator

21120
Page 1174

Positioning tables long

21122
Page 1175

Positioning tables long
with position indicator

21130
Page 1176

Cross tables short

21132
Page 1177

Cross tables short
with position indicators

21134
Page 1178

Cross tables long

21136
Page 1179

Cross tables long
with position indicators

New/Expanded Items

21138
Page 1180

Vertical bracket
short

21139
Page 1181

Vertical bracket
long

21140
Page 1182

Lift tables

21150
Page 1183

Rotary discs

21160
Page 1184

Rotary positioning tables

21161
Page 1185

Rotary positioning tables
with position indicators

21162
Page 1186

Swivel angles

21170
Page 1187

Pivot heads
swivel angle 30°

21180
Page 1188

Base plates

21190
Page 1188

Angle plates

21200
Page 1192

Carriages DryLin® T

21200
Page 1193

Guide rails DryLin® T

21210
Page 1195

Miniature linear guides DryLin® T

21230
Page 1196

Miniature slide guides DryLin® N

21230
Page 1197

Miniature slide guides DryLin® N

21230
Page 1198

Miniature slide guides DryLin® N

21230
Page 1199
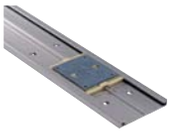
Flat guides DryLin® N

21240
Page 1200

Carriages DryLin® W

21240
Page 1201

Slide carriages DryLin® W

21240
Page 1202

Guide rails DryLin® W
single

21240
Page 1203

Guide rails DryLin® W
double

21320
Page 1204

Roller carriages
compact and heavy-duty version

21320
Page 1205

Roller guide rails

21322
Page 1206

Roller carriages
steel

21322
Page 1207

Roller carriages
aluminium

21322
Page 1208

Roller guide rails

21330
Page 1211

Linear ball bearing
with internal race

21336
Page 1213

Telescopic rails
Double-T form

21338
Page 1214

Telescopic rails
double arrangement

21340
Page 1215

Telescope rails

21342
Page 1217

Telescope rails
S-form

21400
Page 1219

Carriages

21402
Page 1220

Carriages
with flange

21404
Page 1221

Carriages
compact

21406
Page 1222

Carriages
compact, short

21410
Page 1223

Profile guide rails

New/Expanded Items

21420
Page 1224

Miniature carriages
stainless steel

21425
Page 1225

Miniature profile guide rails
stainless steel

21495-01
Page 1226
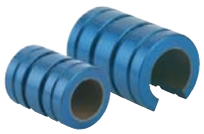
Linear plain bearings

21500
Page 1227

Linear ball bearings
with plastic cage

21505
Page 1228

Linear ball bearings
with steel cage

21505-01
Page 1229

Linear ball bearings stainless steel

21510
Page 1230

Linear ball bearings
self-aligning

21515
Page 1231

Linear ball bearings
self-aligning, high load rating

21518
Page 1232

Linear ball bearings
with flange

21520
Page 1233

Linear ball bearings
with flange, double bearing

21522
Page 1234

Linear housing units
with flange

21524
Page 1235

Linear housing units
with flange, tandem

21530
Page 1236

Linear housing units
single, closed

21535
Page 1237

Linear housing units
single, open

21540
Page 1238

Linear housing units
tandem, closed

21545
Page 1239

Linear housing units
tandem, open

21550
Page 1240

Linear housing units
quadro, closed

21555
Page 1241

Linear housing units
quadro, open

21560
Page 1242

End seals
double-lip sealing rings

21565
Page 1243

Shaft supports

21575
Page 1244

Traverses fixed

21577
Page 1245

Traverses moveable

21580
Page 1246

Shaft supports

21582
Page 1247

Shaft supports
standard

21585
Page 1248

Shaft supports
flanged

21590
Page 1249

Precision guide shafts
with fastening holes

21595
Page 1250

Precision guide shafts

21700
Page 1251

Position indicator
quasi-absolute, mains-independent,
indicator accuracy 10 µm, small design

21702
Page 1252

Position
indicator
quasi-absolute, mains-independent,
indicator accuracy 10 µm

21720
Page 1253
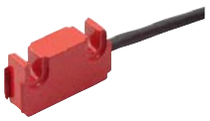
Magnetic sensors
passive sensors, miniature design

21725
Page 1254

Magnetic tape
scale with incremental coding,
5 mm pole length

21730
Page 1255

Hollow shaft sensors
with magnetic scanning

21740
Page 1256

Reducer sleeves

21800
Page 1257

Bullseye levels
in frame, to screw on

21802
Page 1258

Bullseye levels
in plastic frame

21804
Page 1258

Bullseye levels
with bead-edged frame

New/Expanded Items

21806
Page 1259

Bullseye levels
in round frame

21808
Page 1260

Bullseye level body

21810
Page 1261

Bullseye level body
plastic

21812
Page 1261

Tubular bubble levels
with frame to screw on

21880
Page 1262

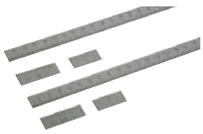

Linear scales
self-adhesive, stainless steel

21882
Page 1263

Linear scales
self adhesive or with screw holes,
aluminium

21884
Page 1264

Linear scales
self-adhesive or with screw holes,
aluminium

21901
Page 1265

Position indicators

21902
Page 1266

Position indicators

21904
Page 1267

Position indicators

21922
Page 1268

Position indicators
freely programmable

21923
Page 1269

Position indicators
freely programmable

21940
Page 1271

Reducing bushings

21942
Page 1271

Intermediate plates

21944
Page 1272

Mounting brackets

21952
Page 1273

Adjusting knobs with position indicator
digital display

21962
Page 1274

Position indicators for handwheels
analogue-digital display

21972
Page 1275

Handwheels for position indicators

New/Expanded Items

Drive technology

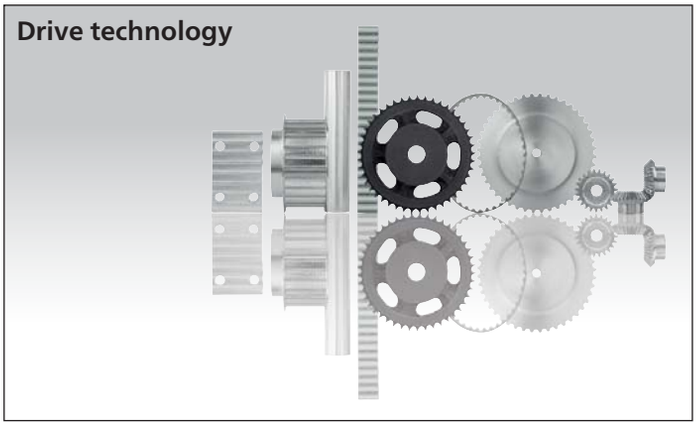

22002
Page 1282

Toothed belt pulleys
T profile

22003
Page 1284

Toothed belt pulleys
AT profile

22004
Page 1286

Toothed pulleys
profile HTD 5M

22004
Page 1287

Toothed pulleys
profile HTD 8M

22005
Page 1290

Toothed pulleys
profile HTD 5M,
for assembly with taper clamping bushes

22005
Page 1292

Toothed pulleys
profile HTD 8M,
for assembly with taper clamping bushes

22007
Page 1294

Splined shafts
T profile

22008
Page 1295

Splined shafts
AT profile

22012
Page 1296

Clamp plates for toothed belts
profile T and AT

22052
Page 1297

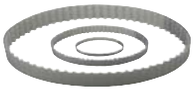

Toothed belts
T profile

22054
Page 1300

Toothed belts by the meter
T profile

22057
Page 1302

Toothed belts
AT profile

22059
Page 1304

Toothed belts by the meter
AT profile

22062
Page 1306

Toothed belt
profile HTD 5M

22062
Page 1307

Toothed belt
profile HTD 8M

22100
Page 1308

Belt tension meter

22101
Page 1309

Line laser

22200
Page 1312

Roller chains single
DIN ISO 606, curved link plate

22200
Page 1312

Links
DIN ISO 606

22208
Page 1313

Roller chains single
DIN ISO 606, straight link plate

22208
Page 1313

Links
DIN ISO 606

22212
Page 1314

Roller chains single stainless steel
DIN ISO 606, curved link plate

22212
Page 1314

Links stainless steel
DIN ISO 606

22250
Page 1316

Sprockets single 3/8“ x 7/32“
DIN ISO 606, ready to install

22250
Page 1318

Sprockets single 1/2“ x 5/16“
DIN ISO 606, ready to install

22250
Page 1321

Sprockets single 5/8“ x 3/8“
DIN ISO 606, ready to install

22250
Page 1324

Sprockets single 3/4“ x 7/16“
DIN ISO 606, ready to install

22250
Page 1327

Sprockets single 1“ x 17.02 mm
DIN ISO 606, ready to install

22252
Page 1330

Sprockets single 3/8“ x 7/32“
DIN ISO 606

22252
Page 1331

Sprockets single 1/2“ x 5/16“
DIN ISO 606

22252
Page 1332

Sprockets single 5/8“ x 3/8“
DIN ISO 606

22252
Page 1333

Sprockets single 3/4” x 7/16”
DIN ISO 606

New/Expanded Items

22252
Page 1334

Sprockets single 1“ x 17.02 mm
DIN ISO 606

22255
Page 1335

Sprockets single 3/8“ x 7/32“
stainless steel DIN ISO 606

22255
Page 1336

Sprockets single 1/2“ x 5/16“
stainless steel DIN ISO 606

22255
Page 1337

Sprockets single 5/8“ x 3/8“
stainless steel DIN ISO 606

22255
Page 1338

Sprockets single 3/4“ x 7/16“
stainless steel DIN ISO 606

22255
Page 1339

Sprockets single 1“ x 17.02 mm
stainless steel DIN ISO 606

22264
Page 1340

Sprockets single 3/8“ x 7/32“
DIN ISO 606

22264
Page 1342

Sprockets single 1/2“ x 5/16“
DIN ISO 606

22264
Page 1344

Sprockets single 5/8“ x 3/8“
DIN ISO 606

22264
Page 1346

Sprockets single 3/4“ x 7/16“
DIN ISO 606

22264
Page 1348

Sprockets single 1“ x 17.02 mm
DIN ISO 606

22280
Page 1350

Idler sprockets with ball bearing

22280
Page 1351

Mounting screws
for idler sprockets

22400
Page 1352

Spur gears in steel, module 1
toothing milled, straight teeth,
engagement angle 20°

22400
Page 1354

Spur gears in steel, module 1.5
toothing milled, straight teeth,
engagement angle 20°

22400
Page 1356

Spur gears in steel, module 2
toothing milled, straight teeth,
engagement angle 20°

22400
Page 1358

Spur gears in steel, module 2.5
toothing milled, straight teeth,
engagement angle 20°

22400
Page 1360

Spur gears in steel, module 3
toothing milled, straight teeth,
engagement angle 20°

22420
Page 1362

Gear racks in steel
toothing milled, straight teeth,
engagement angle 20°

22425
Page 1363

Gear racks in steel
toothing milled, straight teeth,
engagement angle 20°

22430
Page 1364

Bevel gears in steel, ratio 1:1
toothing milled, straight teeth,
engagement angle 20°

22430
Page 1365

Bevel gears in steel, ratio 1:2
toothing milled, straight teeth,
engagement angle 20°

22430
Page 1366

Bevel gears in steel, ratio 1:3
toothing milled, straight teeth,
engagement angle 20°

22430
Page 1367

Bevel gears in steel, ratio 1:4
toothing milled, straight teeth,
engagement angle 20°

22500
Page 1371

Worm gears, right-hand
centre distance 17 mm

22500
Page 1373

Worm gears, right-hand
centre distance 22.62 mm

22500
Page 1375

Worm gears, right-hand
centre distance 25 mm

22500
Page 1376-1377

Worm gears, right-hand
centre distance 31 mm

22500
Page 1379

Worm gears, right-hand
centre distance 33 mm

22500
Page 1381

Worm gears, right-hand
centre distance 35 mm

22500
Page 1383

Worm gears, right-hand
centre distance 40 mm

22500
Page 1385

Worm gears, right-hand
centre distance 50 mm

22500
Page 1387

Worm gears, right-hand
centre distance 53 mm

22500
Page 1389

Worm gears, right-hand
centre distance 63 mm

22500
Page 1391

Worm gears, right-hand
centre distance 65 mm

22500
Page 1393

Worm gears, right-hand
centre distance 80 mm

New/Expanded Items

22700
Page 1395

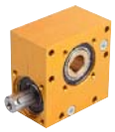

Worm drives

22710
Page 1396

Bevel gears
plastic housing

22712
Page 1397

Bevel gears

22714
Page 1398

Bevel gears

New/Expanded Items

Couplings
Rigid couplings
Keyless locking couplings
Cardan joints
Quick-fit couplings
Bearings
Seals

23000
Page 1401

Metal bellows couplings
with radial clamping hub

23002
Page 1402

Metal bellows couplings
clamping with grub screw

23010
Page 1403

Beam couplings
with radial clamping hub, aluminium

23010
Page 1404

Beam couplings with
radial clamping hub, stainless steel

23012
Page 1405

Beam couplings with
removable clamping hub, aluminium

23012
Page 1406

Beam couplings with
removable clamping hub, stainless steel

23021
Page 1407

Elastomer dog couplings
with conical hub and clamping ring
(similar to DIN 69002)

23022
Page 1408

Elastomer dog couplings
with radial clamping hub

23023
Page 1409

Elastomer dog couplings
clamping with grub screw

23030
Page 1410

Oldham-type couplings
with radial clamping hub

23032
Page 1411

Oldham-type couplings
clamping with grub screw

23050
Page 1412

Rigid couplings
one-piece

23052
Page 1413

Rigid couplings
two-piece

23200
Page 1414

Taper clamping bushes

23350
Page 1420-1421

Keyless locking couplings
Form A for thin walled hubs

23350-01
Page 1422

Keyless locking couplings
Form A stainless steel

23351
Page 1424-1425

Keyless locking couplings
Form B

23352
Page 1426-1427

Keyless locking couplings
Form C with axial ring

23354
Page 1428-1429

Keyless locking couplings
Form D compact design

23354-01
Page 1430

Keyless locking couplings,
Form D stainless steel

23356
Page 1433

Keyless locking couplings
Form E, short version

23358
Page 1435

Keyless locking couplings Form F
short version with axial ring

23360
Page 1437

Keyless locking couplings Form G
increased tolerance range

23360-01
Page 1438

Keyless locking couplings
Form G stainless steel

23362
Page 1441

Keyless locking couplings
Form H for high torques

23368
Page 1443

Keyless locking couplings
with central nut

23370
Page 1444

Shaft-hub clamping sets
stainless steel

23380
Page 1447

Shrink discs
Form A

23380-01
Page 1448

Shrink discs stainless steel
Form A

23382
Page 1451

Shrink discs
Form B

23403
Page 1455

Universal joints single
with plain bearing, DIN 808

23404
Page 1456

Universal joints double
with plain bearing, DIN 808

New/Expanded Items

23406
Page 1457
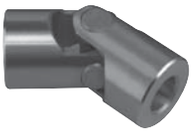
Universal joints single
with needle bearing, DIN 808

23407
Page 1458

Universal joints double
with needle bearing, DIN 808

23409
Page 1459

Universal joints single
with plain bearing, robust version DIN 808

23410
Page 1460

Universal joints double
with plain bearing, robust version DIN 808

23412
Page 1461

Cardan shafts telescopic

23414
Page 1462

Protective rubber sleeves
for universal and cardan joints (single)

23415
Page 1462

Protective rubber sleeves
for universal and cardan joints (double)

23450
Page 1465

Quick-fit couplings
with radial offset compensation

23452
Page 1467

Quick-fit couplings with radial offset
compensation and mounting flange

23454
Page 1468

Quick-fit couplings with
angular and radial offset compensation

23500
Page 1469

igubal® pillow block bearings

23680
Page 1470

Guide bushes
bronze, maintenance-free

23681
Page 1471

Guide bushes
DIN 9834 / ISO 9448, bronze,
maintenance-free with collar

23682
Page 1472

Retaining clips,
DIN 9832

23710
Page 1475

Plain bearings
plastic

23715
Page 1476

Thrust washers plastic

23730
Page 1478

Plain bearings
cylindrical

23731
Page 1480

Plain bearings
with collar

23732
Page 1481

Thrust washers

23760
Page 1482

Plain bearing sintered bronze
cylindrical

23761
Page 1484

Plain bearing sintered bronze
with collar

23800
Page 1486

Deep groove ball bearing FAG
single row

23800-01
Page 1489

Deep groove ball bearings
stainless steel, DIN 626

23800-03
Page 1490

Ceramic ball bearings ZrO2

23800-04
Page 1491

Ceramic ball bearings Si3N4

23805
Page 1492

Angular contact ball bearing FAG
single-row

23815
Page 1493

Spherical roller bearing FAG
cylindrical bore

23820
Page 1494

Cylinder roller bearing FAG
with cage

23825
Page 1495

Tapered roller bearing FAG
single row

23830
Page 1496

Axial ball bearing FAG
single direction

23900
Page 1497

O-rings

23915
Page 1505

Rotary shaft lip seals
DIN 3760

New/Expanded Items

Trapezoidal thread spindles
Ball screw linear actuators
Pillow block bearings

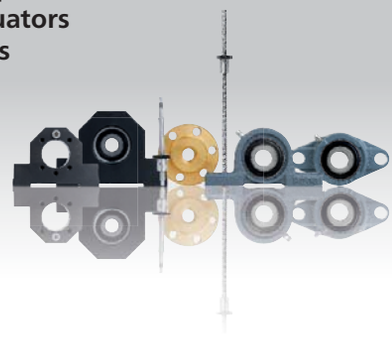

24000
Page 1510

Trapezoidal rolled thread spindles
RH thread, single-start

24003
Page 1511

Trapezoidal thread round nuts
RH thread, single-start

24005
Page 1511

Trapezoidal thread flange nuts
RH thread, single-start

24055
Page 1513

Ball screw linear actuators
rolled, with flange nut DIN 69051 Part 5

24060
Page 1514

Ball screw linear actuators
rolled, with screw-in cylinder nut

24070
Page 1515

Housings
for flange nuts

24072
Page 1516

Fixed bearing units

24074
Page 1517

Floating bearing units

24076
Page 1518

Fixed bearing units
block version

24078
Page 1519

Floating bearing units
block version

24080
Page 1520

Fixed bearing units
flange version

24082
Page 1521

Floating bearing units
flange version

24100
Page 1522-1523

Miniature ball screw
linear actuators
ground, with flange nut

24105
Page 1524-1525

Miniature ball screw
linear actuators
ground, with screw-in cylinder nut

24200
Page 1526

Pillow block bearing pedestal type
UCP

24210
Page 1527

Pillow block bearing flange type UCF

24212
Page 1528

Pillow block bearing flange type UCFC
with centring hub

24215
Page 1529

Pillow block bearing flange type UCFL
2-hole

24225
Page 1530

Pillow block bearing pedestal type
BPP

24230
Page 1531

Insert bearing UC

24235
Page 1532

Insert bearing B

24240
Page 1533

Pillow block bearing pedestal type MUCP
stainless steel

24240-01
Page 1534

Pillow block bearing pedestal type

24241-01
Page 1535

Pillow block bearing pedestal type

24242
Page 1536

Pillow block bearing flange type MUCF
stainless steel

24242-01
Page 1537

Pillow block bearing flange type

24244
Page 1538

Pillow block bearing flange type MUCF
2-hole stainless steel

24244-01
Page 1539

Pillow block bearing flange type
2-hole

24248
Page 1540

Insert bearing MUC
stainless steel

24262-01
Page 1541

Pillow block bearing pedestal type

24264-01
Page 1542

Pillow block bearing flange type

24266-01
Page 1543

Pillow block bearing flange type
2-hole

New/Expanded Items

Compression springs
Elastomer springs
Rubber buffers
Shock absorbers
Gas springs

26000
Page 1548

Compression springs
ISO 10243, light load

26001
Page 1550

Compression springs
ISO 10243, moderate load

26002
Page 1552

Compression springs
ISO 10243, heavy load

26003
Page 1554

Compression springs
ISO 10243, very heavy load

26090
Page 1556

Elastomer buffers
Shore 70A

26091
Page 1557

Elastomer buffers
Shore 80A

26092
Page 1558

Elastomer buffers
Shore 90A

26100
Page 1560

Rubber buffers
steel or stainless steel, type A

26101
Page 1561

Rubber buffers
type AT tapered

26102
Page 1562

Rubber buffers
steel or stainless steel, type B

26102-01
Page 1563

Rubber buffers
stainless steel, type B

26103
Page 1564

Rubber buffers
type E

26103-01
Page 1565

Rubber buffers
stainless steel, type E

26104
Page 1566

Rubber buffers
steel or stainless steel, type C

26104-01
Page 1567

Rubber buffers
stainless steel, type C

26105
Page 1568

Rubber buffers
type CT tapered

26106
Page 1569

Rubber buffers
steel or stainless steel, type D

26106-01
Page 1570

Rubber buffers
stainless steel, type D

26107
Page 1571

Rubber buffers
type DS suction foot

26108
Page 1571

Rubber impact buffers
type TP door buffer

26110
Page 1572

Rubber buffers
parabolic

26112
Page 1573

Rubber buffers
conical

26115
Page 1573

Rubber buffers
spherical

26120
Page 1574

Rubber-metal impact buffer rails

26130
Page 1575

O-shaped mounts

26180
Page 1576

Profile dampers
axial damping

26182
Page 1577

Profile damper
axial damping, soft version

26184
Page 1578

Profile damper
radial damping

26186
Page 1579

Profile damper
radial damping, hard version

26200
Page 1583

Gas springs

26201
Page 1585

Gas springs, stainless steel

26300
Page 1586

Industrial shock absorbers
adjustable

New/Expanded Items

26320
Page 1587

Mounting flange

Clevis joints
Rod ends
Ball joints
Axial joints
Height adjusting elements
Swivel feet
Levelling feet
Tube-end plugs
Equipment feet
Hinges

27614
Page 1590

Clevis joints for rod ends

27615
Page 1591

Clevis joints for rod ends
stainless steel

27616
Page 1592

Hinge plates

27618
Page 1592

Rod-end eyes

27620
Page 1593

Clevis joints with snap-in pin
DIN 71752

27621
Page 1594

Snap-in pin
for clevis joints DIN 71752

27622
Page 1595

Clevis joints stainless steel
DIN 71752

27624
Page 1596

Clevis joints
DIN 71752

27625
Page 1597

Rod ends with ball bearing
external thread

27626
Page 1598

Rod ends with ball bearing
internal thread

27627
Page 1599

Rod ends with plain bearing
external thread

27627
Page 1600

Rod ends igubal® with plain bearing
external thread

27628
Page 1601

Rod ends with plain bearing
internal thread

27628
Page 1602

Rod ends igubal® with plain bearing
internal thread

27629
Page 1603

Rod ends with plain bearing
external thread, stainless steel

27630
Page 1604

Rod ends with plain bearing
internal thread, stainless steel

27631
Page 1605

Rod ends with plain bearing
external thread, narrow version

27632
Page 1606

Rod ends with plain bearing
internal thread, narrow version

27632-02
Page 1607

Spherical bearings K/E series
DIN ISO 12240-1

27650
Page 1608

Ball joints
DIN 71802

27655
Page 1609

Ball seats for ball joints
DIN 71805

27656
Page 1610

Ball studs DIN 71803
for DIN 71802 angle joints

27657
Page 1611

Angle brackets

27658
Page 1611

Side brackets

27659
Page 1612

Round brackets

27660
Page 1612

Circlips for ball seats
DIN 71805

27665
Page 1613

Axial joints
similar to DIN 71802

27670
Page 1615

Axial joints for tractive forces
adjustable

27700
Page 1616

Levelling sets
high version

27701
Page 1617

Levelling sets
with locknut

New/Expanded Items

27702
Page 1618

Levelling sets
low version

27703
Page 1619

Levelling sets
low version with locknut

27705
Page 1620

Levelling sets
spherical washer

27706
Page 1621

Levelling sets
spherical washer with locknut

27707
Page 1622

Levelling sets
spherical washer

27708
Page 1623

Levelling sets
spherical washer with locknut

27750
Page 1624

Cup elements
type H2

27760
Page 1625

Machine feet

27800
Page 1627

Swivel feet plates
plastic

27800
Page 1628

Swivel feet plates antistatic

27801
Page 1631

Swivel feet plates
die-cast zinc or stainless steel

27802
Page 1632

Swivel feet plates extended
die-cast zinc

27803
Page 1633

Swivel feet plates
stainless steel

27804
Page 1635

Swivel feet plates
with vibration absorption

27806
Page 1636

Swivel feet
with vibration absorption

27808
Page 1637

Machine feet
with vibration absorption

27810
Page 1638

Swivel feet threaded spindles
steel or stainless steel

27811
Page 1639

Swivel feet ball joints
with internal thread

27815
Page 1641

Levelling feet plates
plastic

27816
Page 1642

Levelling feet plates
plastic, heavy-duty version

27817
Page 1645

Levelling feet plates
die-cast zinc or stainless steel

27818
Page 1646

Levelling feet plates extended
die-cast zinc

27828
Page 1647

Levelling feet threaded spindles
steel or stainless steel

27830
Page 1649

Levelling feet plates ECO
die-cast zinc, stainless steel or plastic

27832
Page 1650

Levelling feet ECO threaded spindles
steel or stainless steel

27833
Page 1651

Ducks feet

27835
Page 1652

Tube inserts square
with tapped bush

27836
Page 1653

Tube inserts round
with tapped bush

27840
Page 1654

Levelling feet
for aluminium profiles

27841
Page 1655

Levelling feet

27850
Page 1657

Hinges
plastic, lift-off, left

27850
Page 1658

Hinges
plastic, lift-off, right

27852
Page 1659

Hinges
plastic

27853
Page 1660

Hinges
plastic, with locking lever

27854
Page 1661

Hinges
plastic, with elongated holes

27855
Page 1662

Hinges
plastic with fastening holes

New/Expanded Items

27856
Page 1663

Hinges
plastic, lift-off, with guide tabs

27857
Page 1664

Hinges
plastic, detent

27858
Page 1665

Hinges
plastic, with adjustable friction

27859
Page 1666

Hinges
aluminium, with adjustable friction

27860
Page 1667

Hinges
aluminium, with adjustable friction

27861
Page 1668

Hinges
aluminium, with detent

27862
Page 1669

Hinges
aluminium, with detent

27865
Page 1670

Hinges
die-cast zinc, with elongated holes

27868
Page 1671

Hinges
die-cast zinc, with locking lever

27870
Page 1672

Hinges
aluminium, lift-off, left

27870
Page 1673

Hinges
aluminium, lift-off, right

27870-01
Page 1674

Hinges lift-off
stainless steel

27872
Page 1675

Hinges
aluminium

27875
Page 1676

Hinges
stainless steel

27875-01
Page 1677

Hinges
stainless steel

27875-89
Page 1678

Hinges lift-off
stainless steel

27875-90
Page 1679

Hinges
stainless steel

27876
Page 1680

Hinges
stainless steel

27876-01
Page 1681

Single leaf hinges
adjustable, stainless steel

27876-02
Page 1682

Hinges
stainless steel

27876-05
Page 1683

Strap hinges
stainless steel with grease nipple

27877
Page 1684

Hinges
plate, steel or stainless steel

27877-01
Page 1685

Butt hinges
stainless steel

27880
Page 1686

Hinges
plastic with bushes

27882
Page 1687

Hinges
plastic with fastening screws

27884
Page 1688

Hinges
plastic with bushes and fastening screws

27885
Page 1689

Hinges
weldable

27886
Page 1690

Hinges
weldable, stainless steel

27886-03
Page 1691

In-line hinges stainless steel
lift-off, screw-on

27888
Page 1692

Hinges
weldable

27890
Page 1693

Angular hinges
with fastening nuts

27890-02
Page 1694

Block hinges
with fastening nuts

27891
Page 1695

Angular hinges
with fastening nuts, long version

27892
Page 1696

Angular hinges
with counterbore, long version

27898
Page 1697

Hinges
steel, maintenance-free

27900
Page 1698

Spring hinges
steel or stainless steel, 50 mm

New/Expanded Items

27901
Page 1699

Spring hinges
steel or stainless steel, 75 mm

27902
Page 1700

Spring hinges
steel or stainless steel, 120 mm

27903
Page 1701

Spring hinges
steel or stainless steel, 180 mm

27904
Page 1702

Spring hinges
steel or stainless steel, 240 mm

27905
Page 1703

Spring hinges
aluminium profile tension spring hinges, 0.20 Nm

27906
Page 1704

Spring hinges
aluminium profile tension spring hinges, 0.35 Nm

27907
Page 1705

Spring hinges
aluminium profile tension spring hinges, 0.7 Nm

27908
Page 1706

Spring hinges
aluminium profile tension spring hinges, 1.3 Nm

27909
Page 1707

Spring hinges
aluminium profile tension spring hinges, 3.8 Nm

27950
Page 1708

Security hinge switches

27951
Page 1709

Security hinge switch
long version

New/Expanded Items

Oil level gauges
Caps
Plugs
Vent screws
Dipsticks
Filler necks

28000
Page 1712

Oil level gauges

28000
Page 1713

Oil level gauges

28001
Page 1714

Oil level gauge
long version

28004
Page 1715

Oil level sight glasses

28006
Page 1716

Oil level sight glasses
press-in

28008
Page 1716

Oil level sight glasses
domed

28010
Page 1717

Oil level sight glasses
aluminium

28012
Page 1717

Oil level sight glasses
aluminium, glass window

28013
Page 1718

Screw plugs with hexagon socket
DIN 906, tapered thread

28014
Page 1719

Screw plugs
with collar and hexagon socket
DIN 908

28016
Page 1720

Screw plugs hex head with collar
DIN 910

28018
Page 1721

Screw plugs

28020
Page 1721

Screw plugs

28021
Page 1722

Screw plugs
with hexagon socket

28022
Page 1723

Press-in plugs

28024
Page 1724

Screw plugs with magnet

28026
Page 1724

Screw plugs aluminium with magnet

28027
Page 1725

Screw plugs
aluminium

28028
Page 1726

Screw plugs

28029
Page 1727

Screw plugs
with dipstick

28030
Page 1728

Plugs fill only
knurled cap

28032
Page 1729

Caps for filler necks

28034
Page 1729

Vent screws

28036
Page 1730

Vent screws
with splash guard

28038
Page 1731

Vent screws
with check valve

28040
Page 1732

Vent screws brass

28042
Page 1732

Vent screws brass
with check valve

28048
Page 1733

Press-in plugs
with dipstick

28054
Page 1734

Vent screws
with dipstick

28058
Page 1735

Vent screws
with check valve and dipstick

28060
Page 1736

Dipsticks

28070
Page 1737

Filler necks

New/Expanded Items

28071
Page 1738

Filler necks

28072
Page 1739

Filler necks

Tube connectors
Tube clamps
Tube joints
Tubes
Columns

29000
Page 1743

Tube clamps
cross, plastic

29000
Page 1743

Tube clamps
cross, aluminium

29000
Page 1744

Tube clamps
cross, aluminium

29000
Page 1745

Tube clamps
cross, stainless steel

29002
Page 1746

Tube clamps
cross, plastic

29002
Page 1746

Tube clamps
cross, aluminium

29004
Page 1747

Tube clamps
cross, plastic

29004
Page 1747

Tube clamps
cross, aluminium

29006
Page 1748

Tube clamps
T-angle, plastic

29006
Page 1749

Tube clamps
T-angle, aluminium

29006
Page 1750

Tube clamps
T-angle, stainless steel

29008
Page 1751

Tube clamps
T-angle, plastic

29008
Page 1752

Tube clamps
T-angle, aluminium

29008
Page 1752

Tube clamps
right-angle, aluminium

29010
Page 1753

Tube clamps
base, plastic

29010
Page 1754

Tube clamps
base, aluminium

29010
Page 1755

Tube clamps
base, stainless steel

29012
Page 1756

Tube clamps
base, plastic

29012
Page 1756

Tube clamps
base, aluminium

29014
Page 1757

Tube clamps
flange, plastic

29014
Page 1758

Tube clamps
flange, aluminium

29014
Page 1759

Tube clamps
flange, aluminium

29014
Page 1760

Tube clamps
flange, stainless steel

29016
Page 1761

Tube clamps
flange, plastic

29016
Page 1761

Tube clamps
flange, aluminium

29022
Page 1762

Tube clamps
straight, plastic

29024
Page 1763

Tube clamps
swivel half, sunken teeth, plastic

29026
Page 1764

Tube clamps
swivel half, raised teeth, plastic

29028
Page 1765

Tube clamps
swivel half, sunken teeth, plastic

29030
Page 1766

Tube clamps
swivel base, sunken teeth, plastic

New/Expanded Items

29032
Page 1767

Tube clamps
swivel, plastic

29032
Page 1768

Tube clamps
swivel, aluminium

29034
Page 1769

Tube clamps
swivel, plastic

29034
Page 1770

Tube clamps
swivel, aluminium

29036
Page 1771

Tube clamps
swivel base, plastic

29036
Page 1772

Tube clamps
swivel base, aluminium

29040
Page 1773

Reducer sleeves
square

29042
Page 1773

Reducer sleeves
round

29050
Page 1774

Round and square tubes

29056
Page 1775

Tube end plugs

29105
Page 1777

Linear actuators

29120
Page 1778

Linear actuator connector clamps
cross

29125
Page 1779

Linear actuator connector clamps
cross

29130
Page 1780

Linear actuator connector clamps
flange

29135
Page 1781

Linear actuator connector clamps
base

29180
Page 1784

Monitor brackets

29200
Page 1786

Column bases single

29205
Page 1787

Column bases double

29207
Page 1788

Column clamps double

29210
Page 1789

Adjustment units

29215
Page 1790

Column shaft collars

29240
Page 1791

Rods stainless steel

New/Expanded Items

Inspection tables
Gauge stands
Gauge joints

31000
Page 1794

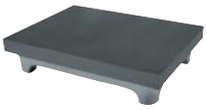

Inspection tables

31020
Page 1794

Inspection blocks
with column

31090
Page 1795

Support cylinders
for workpieces with collar

31100
Page 1795

Gauge holders articulated arm
with central hydraulic lock

31102
Page 1796

Gauge stands magnetic

31120
Page 1796

Magnetic stands

31125
Page 1797

Magnetic stands

31130
Page 1797

Dial gauge arms

31140
Page 1798

Dial gauge holders

31141
Page 1798

Dial gauge holders
with fine adjustment

31150
Page 1799

Joint blocks

31152
Page 1799

Joint blocks

31154
Page 1800

Joint blocks

31156
Page 1800

Clamping joints

New/Expanded Items

Concentricity gauges
Dial gauges

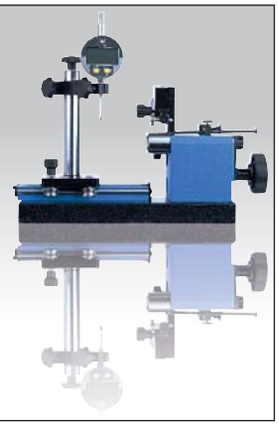

32501
Page 1804

Concentricity gauges
max. Ø 35 mm

32506
Page 1805

Concentricity gauges
max. Ø 80 mm

32501
Page 1806

Accessories
for concentricity gauges

32540
Page 1809

Dial gauges
DIN 878

32542
Page 1810

Dial gauges digital

New/Expanded Items

Standard inspection and test fixture elements

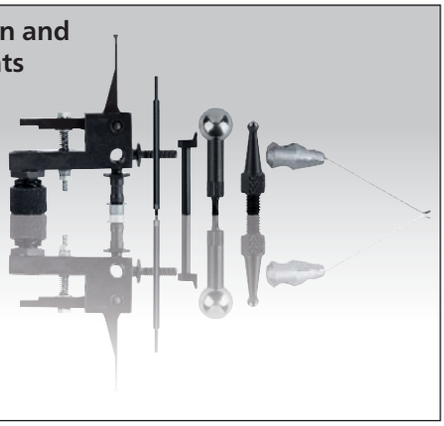

33000
Page 1812

Dial gauge collets
for Ø8 shafts

33010
Page 1813

Dial gauge holders
sliding

33012
Page 1813

Dial gauge holders
short version with thread

33014
Page 1814

Dial gauge holders
long version with thread

33016
Page 1814

Dial gauge holders
short version with smooth shaft

33018
Page 1815

Dial gauge holders
for measuring frame

33020
Page 1816

Probe
with flat face

33022
Page 1816

Probe
with flat point

33024
Page 1817

Probe
with reduced flat face

33026
Page 1817

Probe
with reduced domed point

33028
Page 1818

Probe knife point

33029
Page 1818

Probe knife point
offset

33032
Page 1819

Extension
for probe inserts

33035
Page 1819

Probe knife point
offset, for fixed stop

33040
Page 1820

Probe inserts
with domed point

33042
Page 1820

Probe inserts
with ball point

33044
Page 1821

Probe inserts
knife point

33046
Page 1821

Probe inserts
with flat face

33048
Page 1822

Probe inserts
with domed face

33050
Page 1822

Probe inserts
with enlarged flat face

33052
Page 1823

Extensions
for probe inserts

33058
Page 1823

Probe insert set
11-piece

33058
Page 1824

Probe inserts hardened steel
thread M2.5

33058
Page 1825

Probe inserts carbide
thread M2.5

33060
Page 1826

Protection frames
for dial gauges

33070
Page 1828

Deflection dial gauge holders 90°

33072
Page 1828

Deflection dial gauge holders 90°
probe lever with thread

33074
Page 1829

Deflection dial gauge holders 90°
probe lever with hole

33076
Page 1829

Deflection dial gauge holders 180°
probe lever with hole

33078
Page 1830

Deflection dial gauge holders 90°
probe lever with thread

33080
Page 1830

Deflection dial gauge holders 180°
probe lever with thread

33090
Page 1831

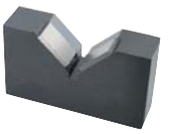

Prism attachments

New/Expanded Items

33092
Page 1831

Spacers
for prisms attachments

33105
Page 1832

Slotted round nuts

33110
Page 1833

Pivoting columns

33115
Page 1834

Pivoting systems

33140
Page 1835

Measuring fixtures

33150
Page 1837

Measuring arms

33180
Page 1838

Spring mounted centre sleeves
with tension lever

33182
Page 1839

Centre sleeves
spring mounted with retraction cam

33184
Page 1840

Adjustable holder
for fixed centres

33190
Page 1840

Fixed centres

33202
Page 1842

Measuring element
for gear wheels

33205
Page 1843

Ball holders

33225
Page 1845

Precision vice

33250
Page 1846

Clamping component set

33260
Page 1847

Spring fingers

33262
Page 1848

Columns
for spring fingers

New/Expanded Items

Vices

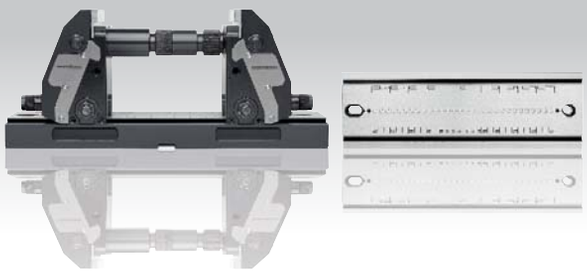

41300
Page 1854

5-axis clamping system compact jaw plate, smooth

41305
Page 1855

Base plates

41315
Page 1856

Vice jaws complete

41320
Page 1857

Jaw plates smooth

41320
Page 1857

Jaw plates with pins

41320
Page 1858

Jaw plates machinable

41325
Page 1859

Pendulum jaws

41330
Page 1860

Jaw plates smooth for pendulum jaws

41330
Page 1861

Jaw plates with pins for pendulum jaws

41335
Page 1862

Centre jaws

41340
Page 1863

Jaw plates smooth for centre jaws

41340
Page 1863

Jaw plates with pins for centre jaws

41345
Page 1864

Seating ledges

41060
Page 1864

Jaw pins

41350
Page 1865

Cylinder clamping sets

41355
Page 1866

Extension shafts

41360
Page 1866

Adapter shafts

41365
Page 1867

Couplings for cross-clamping

41370
Page 1868

Stop sets

41375
Page 1869

Clamping claw sets

New/Expanded Items

Material handling and transport

95010
Page 1872

Swivel and fixed castors
standard version

95010
Page 1873

Swivel and fixed castors
electrically conductive, standard version

95012
Page 1874

Swivel and fixed castors
heavy-duty version

95012
Page 1875

Swivel and fixed castors
steel plate, electrically conductive,
heavy-duty version

95016
Page 1876

Swivel and fixed castors
standard version

95016
Page 1877

Swivel and fixed castors
steel plate, electrically conductive
standard version

95018
Page 1878

Swivel and fixed castors
standard version

95020
Page 1879

Swivel and fixed castors
heavy-duty version

95024
Page 1880

Swivel and fixed castors
standard version

95028
Page 1881

Swivel and fixed castors
medium-duty version

95030
Page 1882

Swivel and fixed castors
heavy-duty version

95032
Page 1883

Swivel and fixed castors
welded steel heavy-duty version

95034
Page 1884

Swivel and fixed castors
standard version

95036
Page 1885

Swivel and fixed castors
heavy-duty version

95040
Page 1886

Swivel and fixed castors
heavy-duty version

95045
Page 1887

Swivel castors
compact version

95050
Page 1888

Wheels
rubber tyres on steel plate rims

95053
Page 1889

Wheels
rubber tyres on die-cast aluminium rims

95056
Page 1889

Wheels
polyamide with injection-moulded tread

95057
Page 1890

Guide rollers

95058
Page 1891

Wheels
aluminium rims
with injection-moulded tread

95059
Page 1891

Rollers heavy-load

95060
Page 1892

Wheels heavy-load
wheel body welded

95062
Page 1892

Wheels polyamide

95064
Page 1893

Wheels polyamide
heavy-duty version

95090
Page 1894

Elevating castors with foot
with bolt hole or mounting plate

95092
Page 1895

Elevating castors
with integrated machine foot

95150
Page 1897

Ball transfer units
with steel housing

95152
Page 1898

Ball transfer units
with steel housing and plastic ball

95154
Page 1899

Ball transfer units
undersprung

95156
Page 1900

Ball transfer units
with solid steel housing

95156-01
Page 1900

Ball transfer units heavy duty
stainless steel

New/Expanded Items

95156-02
Page 1901

Ball transfer units
heavy duty stainless steel,
suitable for outdoor use

95158
Page 1901

Ball transfer units
with fastening holes, without housing

95160
Page 1902

Ball transfer units
with spring clips

95164
Page 1902

Tolerance rings

95180
Page 1903

Mini ball transfer units

95182-01
Page 1904

Ball transfer units with stud
stainless steel

95300
Page 1905

Small conveyor belts
with internal drive

New/Expanded Items

norelem transports

Material handling and transport

Feeler gauge strips
Magnetic labels and envelopes
Protective nets
Supercraft mallets and inserts
Taper and cylinder cleaners
Coolant hoses

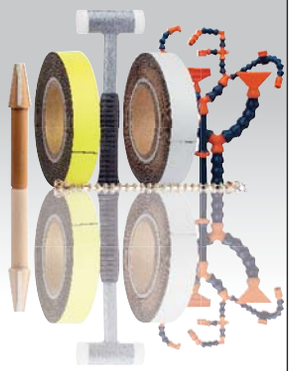

96200
Page 1909

Coolant hose LOC-LINE® Flexi

96202
Page 1912

Suction hoses
LOC-LINE® FLEXI 75

96203
Page 1913

Suction hoses
LOC-LINE® FLEXI 75
antistatic

96205
Page 1914

High pressure nozzles LOC-LINE®

96382
Page 1915

Feeler gauge strips

96390
Page 1916

Ball chains

96450
Page 1918

Magnetic labels
on a roll, perforated

96455
Page 1918

Magnetic labels

96460
Page 1919

Magnetic tape rolls

96465
Page 1919

Magnetic C profiles

96470
Page 1920

Magnetic envelopes

96471
Page 1920

Magnetic envelopes
with strong magnetics

96500
Page 1921

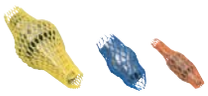

Net sleeves

96510
Page 1921

Net mats

96610
Page 1922

Supercraft soft faced hammer
recoilless

96614
Page 1922

Hammer inserts
for Supercraft hammers

96630
Page 1923

Taper cleaners
for Morse tapers

96632
Page 1923

Taper cleaners
for short tapers

96634
Page 1924

Taper cleaners
for hollow shank tapers

96636
Page 1925

Cylinder cleaners

96638
Page 1925

Cylinder cleaners
two-part

96650
Page 1926

Hook wrench with lug
DIN 1810A enhanced

96651
Page 1927

Face pin spanner
adjustable, cranked

New/Expanded Items

Lubricants
Adhesives
Grease nipples

97900
Page 1930

Klüber "Quietsch-Ex"

97901
Page 1930

Klüber lubricating paste

97903
Page 1931

Klüber copper paste
lead-free

97905
Page 1931

Klüber safety lubricating grease

97907
Page 1932

Klüber molybdenum disulphide
lubricant

97909
Page 1932

Klüber liquid chain grease

97920
Page 1933

Klüber bonded coating
UNIMOLY C 220

97930
Page 1934

Ballistol all-purpose oil
in food industry quality

97940
Page 1936

Grease nipples
conical head DIN 71412

97941
Page 1938

Grease nipple caps
for conical grease nipples

97942
Page 1939

Grease nipples
flush type, DIN 3405

97944
Page 1940

Grease nipples
button head DIN 3404

97990
Page 1941

LOCTITE liquid epoxy metals

97990
Page 1941

LOCTITE liquid epoxy metals

97990
Page 1942

LOCTITE threadlocker

97990
Page 1943

LOCTITE universal adhesive

97990
Page 1944

LOCTITE thread sealant

97990
Page 1945

LOCTITE flange sealant

97990
Page 1946

LOCTITE adhesive and sealant

97990
Page 1947

LOCTITE retaining compound

97990
Page 1948

LOCTITE cleaner

97990
Page 1949

LOCTITE activators

97990
Page 1949

Application equipment

New/Expanded Items

01000

Basic elements
Subplates
Discs
Profiles
Angle plates
Tombstones

Base plate with T-slots

grey cast iron

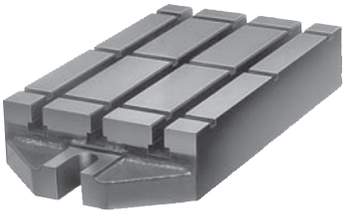

Material:
GJL 250 annealed.

Sample order:
nlm 01040-04

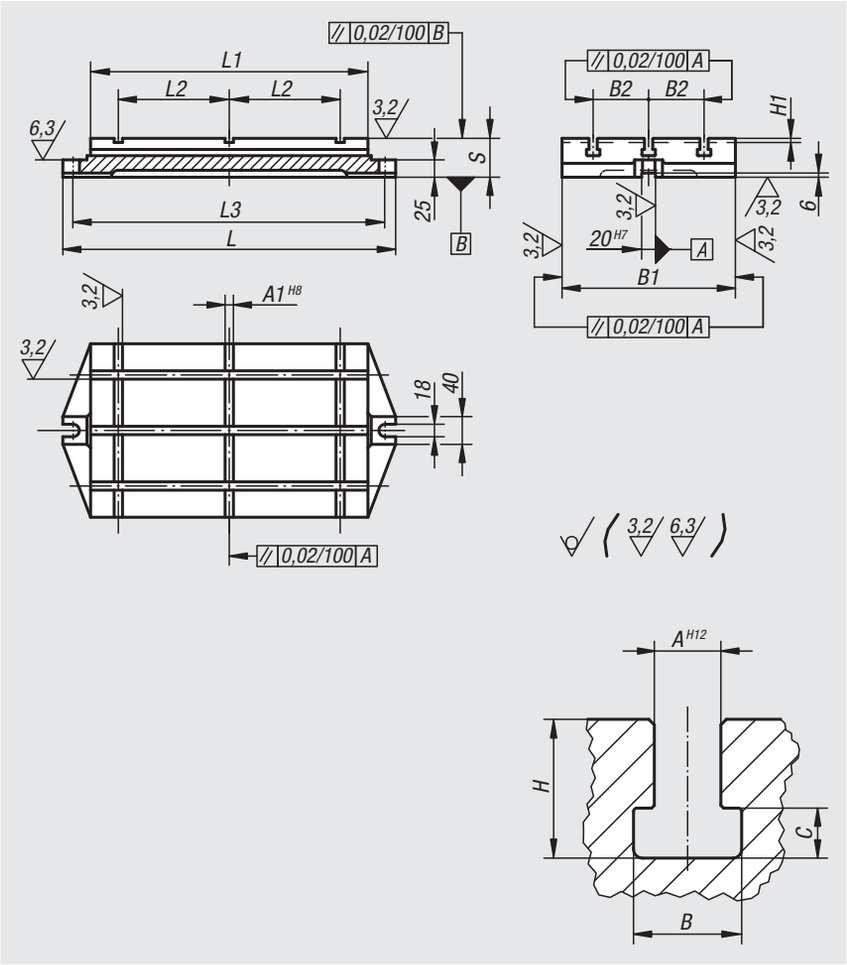

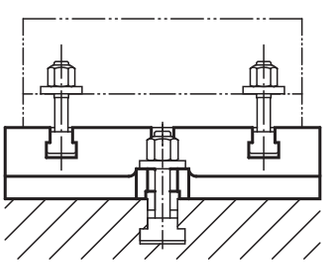

Order No.	L	L1	L2	L3	B1	B2	H1	S	A1	A	B	C	H
01040-01	280	200	70	250	125	40	4	50	6	10	16,5	7	21
01040-02	330	250	100	300	160	50	4	50	8	10	16,5	7	21
01040-03	395	315	125	365	200	63	4	56	10	12	19,5	8	25
01040-04	480	400	160	450	250	80	6	56	12	12	19,5	8	25
01040-05	580	500	220	550	315	100	6	63	14	14	23	9	28
01040-06	710	630	280	680	400	125	6	63	18	14	23	9	28

Base plates steel

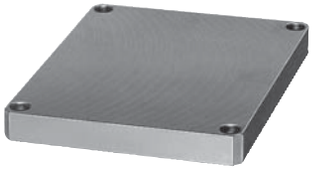

Material:
Carbon steel 1.1181.

Version:
Bright.

Sample order:
nlm 01060-01

Drawing reference:
machined surfaces: ±0.25 mm
thickness: +0/-0.5 mm
raw surfaces: ±2 mm

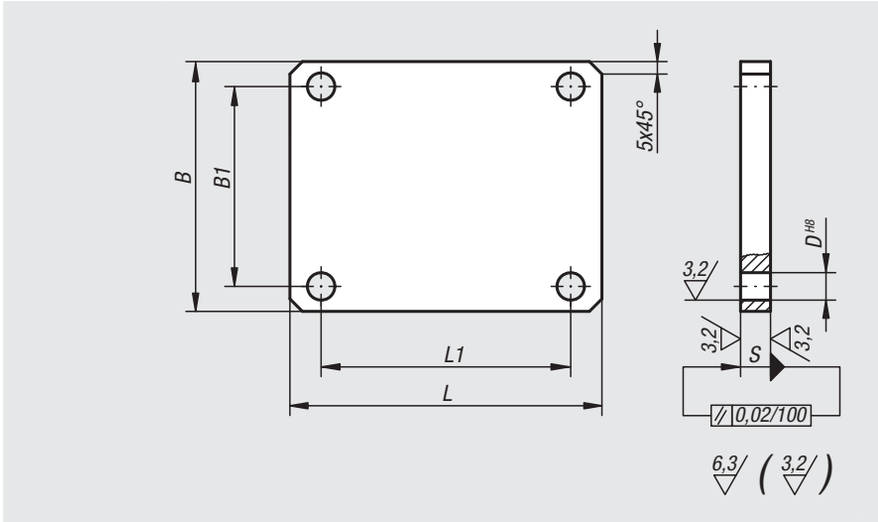

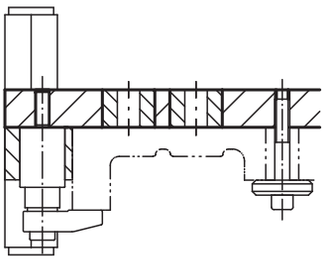

Order No.	L	L1	B	B1	S	D
01060-01	125	100	100	80	12	11
01060-02	160	140	125	100	16	11
01060-03	200	180	160	140	20	13
01060-04	250	220	200	180	20	13
01060-05	315	280	250	220	20	13

Example of a fixture using almost exclusively norelem parts:

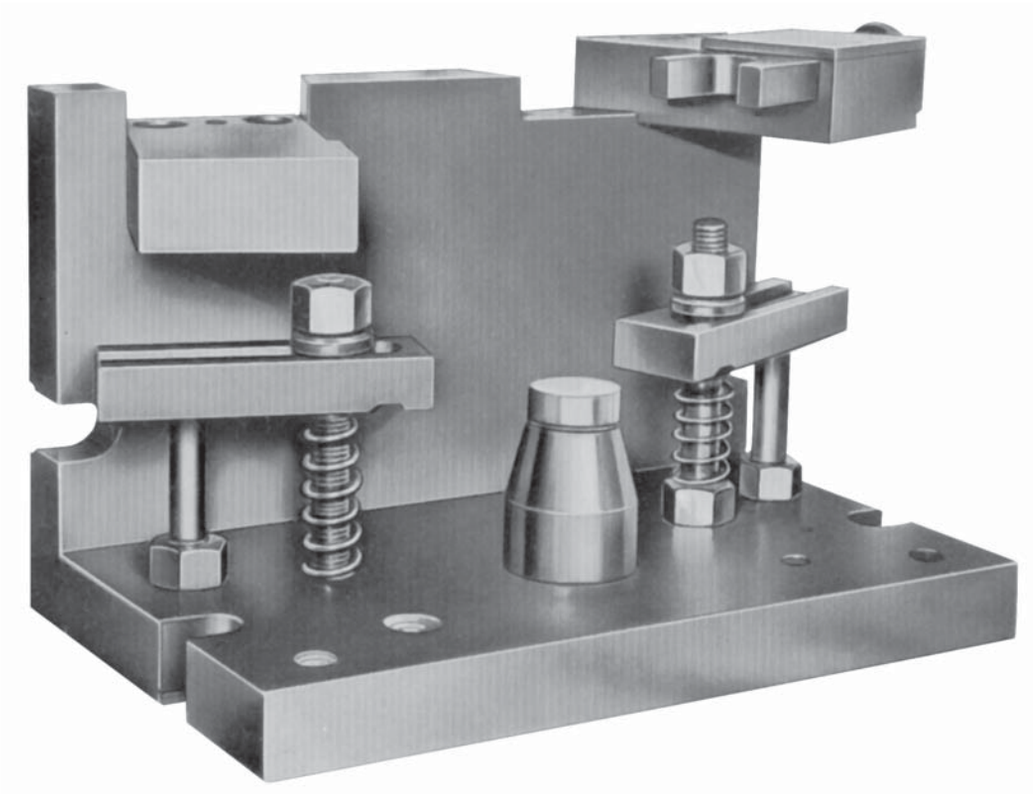

01127

Base plates

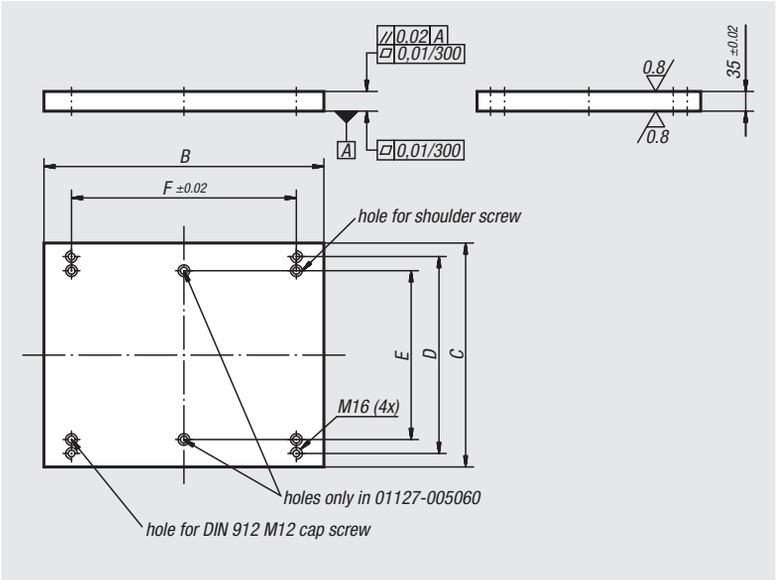

Material:
Grey cast iron GJL 250

Version:
Mounting surfaces ground

Sample order:
nlm 01127-005060

Note:
The base plates are positioned using the shoulder screws 07533-12055, which are placed in the fastening holes. The holes for DIN 912 cap screws are used for additional fastening.

Order No.	B	C	D	E	F	Suitable shoulder screw
01127-003040	398	298	250	200	300	07533-12055
01127-004050	498	398	350	300	400	07533-12055
01127-005060	598	498	450	400	500	07533-12055

01130

Rectangular plates

precision steel

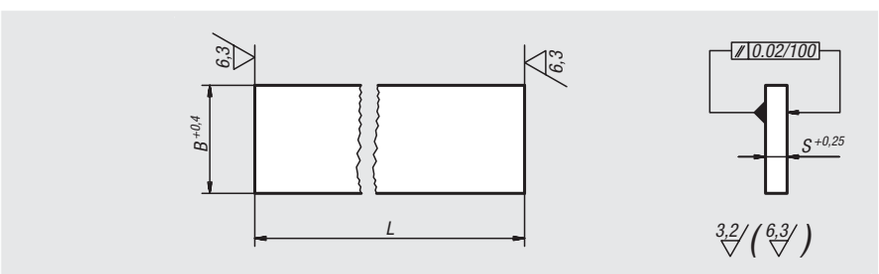

Material:
Steel 1.1730

Version:
Bright.

Sample order:
nlm 01130-04X500 (include length L)

Note:
These precision steel plates are suitable for use as base plates in machine, tool and fixture construction. The dimension L is sawn to length and is always supplied oversized.

Order No.	L = length	B	S
01130-01X	250/500/750/1000	40	8
01130-02X	250/500/750/1000	50	10
01130-03X	250/500/750/1000	63	12
01130-04X	250/500/750/1000	80	16
01130-05X	250/500/750/1000	100	16
01130-06X	250/500/750/1000	100	20
01130-07X	250/500/750/1000	125	25
01130-08X	250/500/750/1000	150	25
01130-09X	250/500/750/1000	160	32
01130-10X	250/500/750/1000	200	32
01130-11X	250/500/750/1000	300	40

Plates

grey cast iron or aluminium

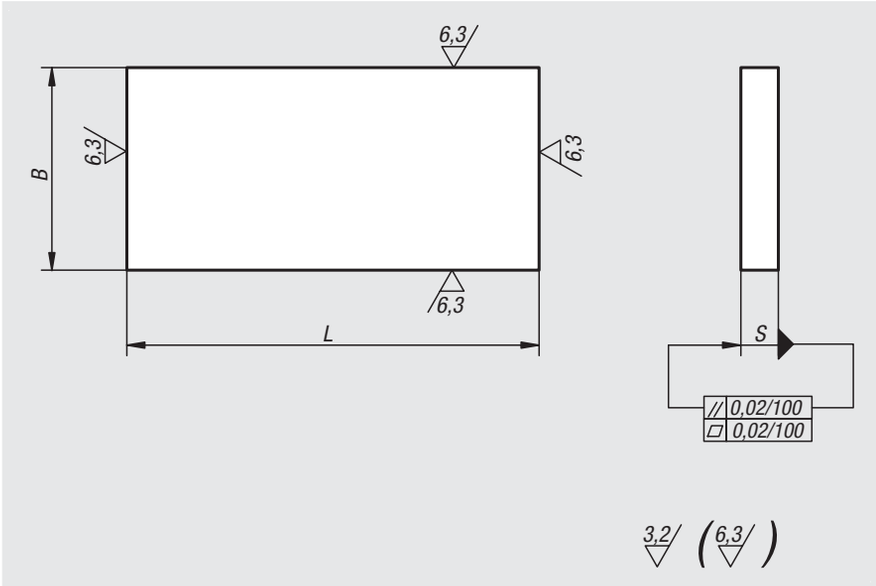

Material:
GJL 250 annealed or EN AW-7075

Sample order:
nlm 01140-07X300 (include length L)

Note:
The length L is cut by saw and is always supplied overlong.

Drawing reference:
machined faces:
grey cast iron: +0.2 mm / +0.5 mm
aluminium: ± 0.1 mm
length tolerance:
≤200 mm: +1/+5
>200 mm ≤400 mm: +4/+15
>400 mm: +13/+40

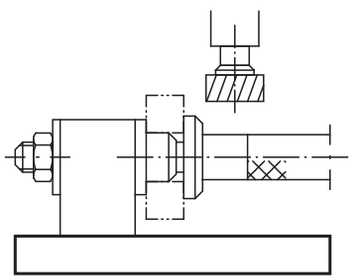

Order No. grey cast iron	Order No. aluminium	L = length	B	S
01140-01X	01140-201X	300	40	10
01140-02X	01140-202X	300	50	12
01140-03X	01140-203X	300	63	16
01140-04X	01140-204X	200/300/400/600/800	80	20
01140-05X	01140-205X	200/300/400/600/800	100	20
01140-06X	01140-206X	200/300/400/600/800	160	20
01140-061X	01140-2061X	200/300/400/600/800	200	20
01140-062X	01140-2062X	200/300/400/600/800	250	20
01140-07X	01140-207X	200/300/400/600/800/1200	125	25
01140-08X	01140-208X	200/300/400/600/800/1200	200	25
01140-081X	01140-2081X	200/300/400/600/800/1200	250	25
01140-082X	01140-2082X	200/300/400/600/800/1200	315	25
01140-09X	01140-209X	200/300/400/600/800/1200	160	32
01140-10X	01140-210X	200/300/400/600/800/1200	250	32
01140-101X	01140-2101X	200/400/600/800/1200	315	32
01140-102X	01140-2102X	200/300/400/600/800/1200	400	32
01140-11X	01140-211X	200/400/600/800/1200	200	40
01140-12X	01140-212X	200/400/600/800/1200	250	40
01140-120X	-	200/400/600/800/1200	315	40
01140-121X	-	200/300/400/600/800/1200	400	40
01140-13X	-	200/400/600/800/1200	315	50
01140-131X	-	200/300/400/600/800/1200	500	50

Subplates

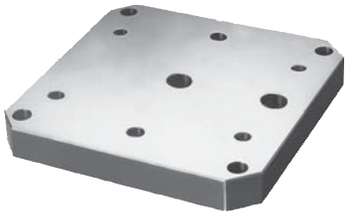

Material:
Grey cast iron GJL 250

Version:
Mounting surfaces ground

Sample order:
nlm 01148-005050

Note:
The subplate positioning and fastening holes conform to subplates for machine tools acc. to DIN 55201 and JIS 6337-1980.

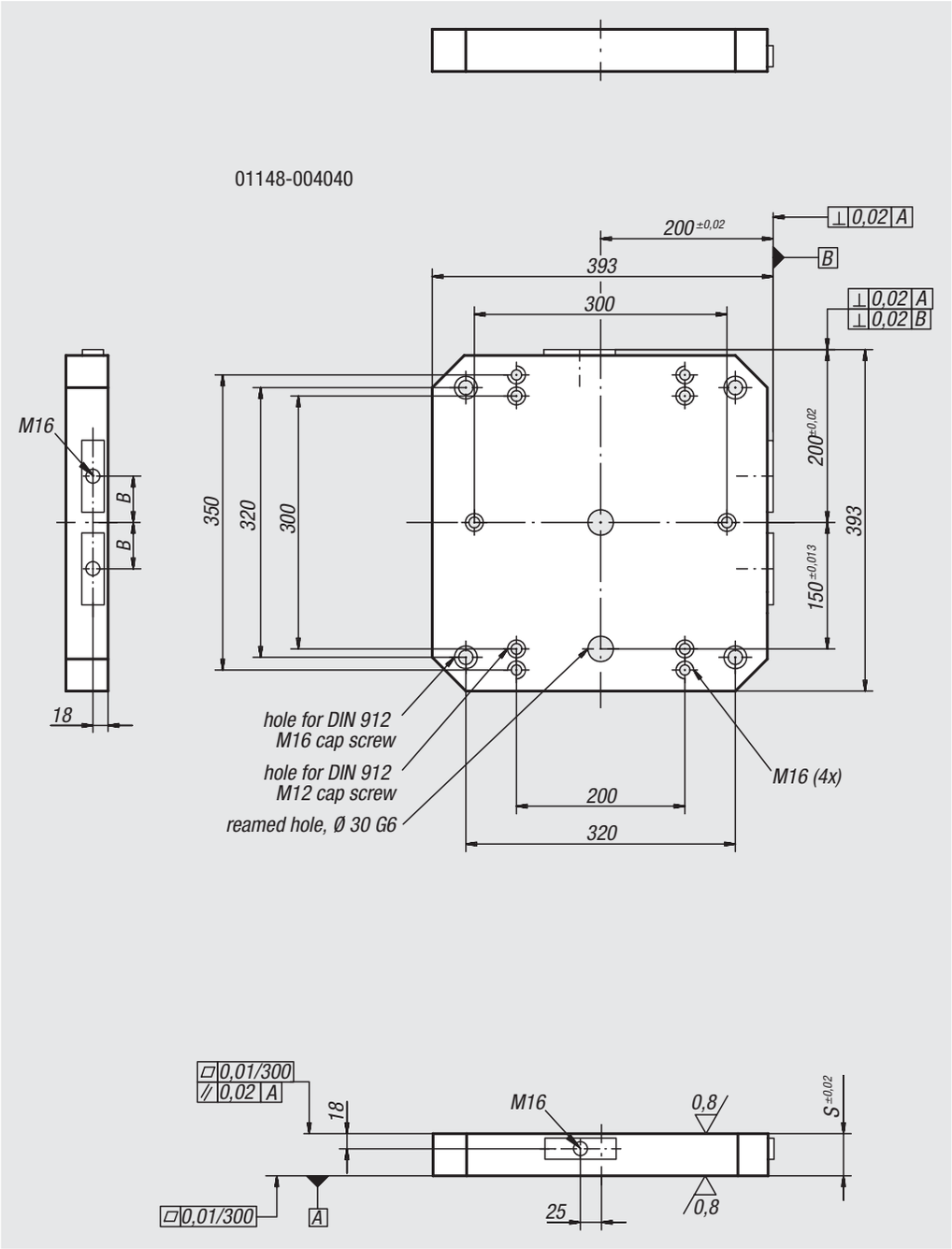

Order No.	B	S
01148-004040	55	50
01148-005050	75	50
01148-006363	100	50
01148-008080	135	60

Subplates

01148-005050

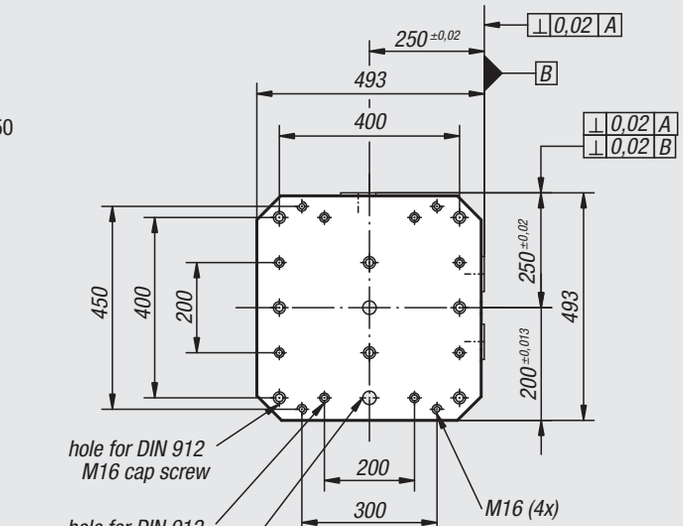

01148-006363

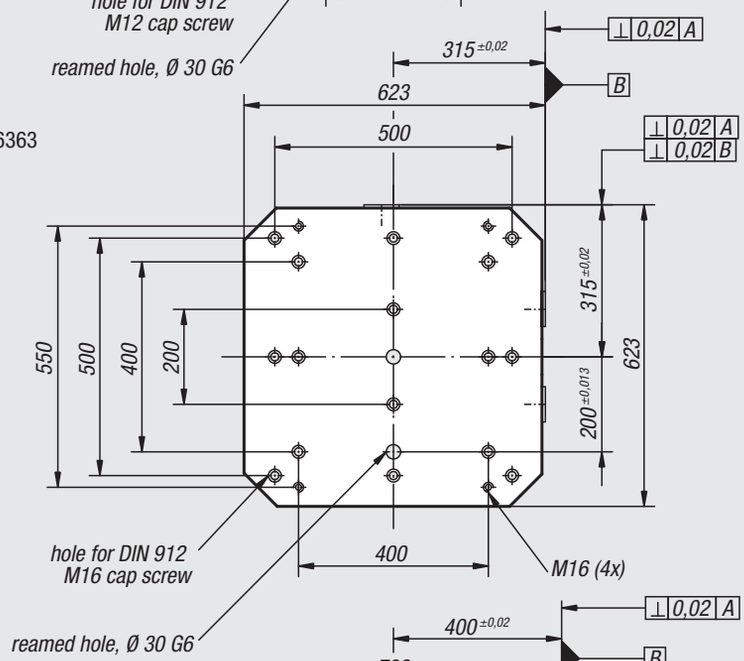

01148-008080

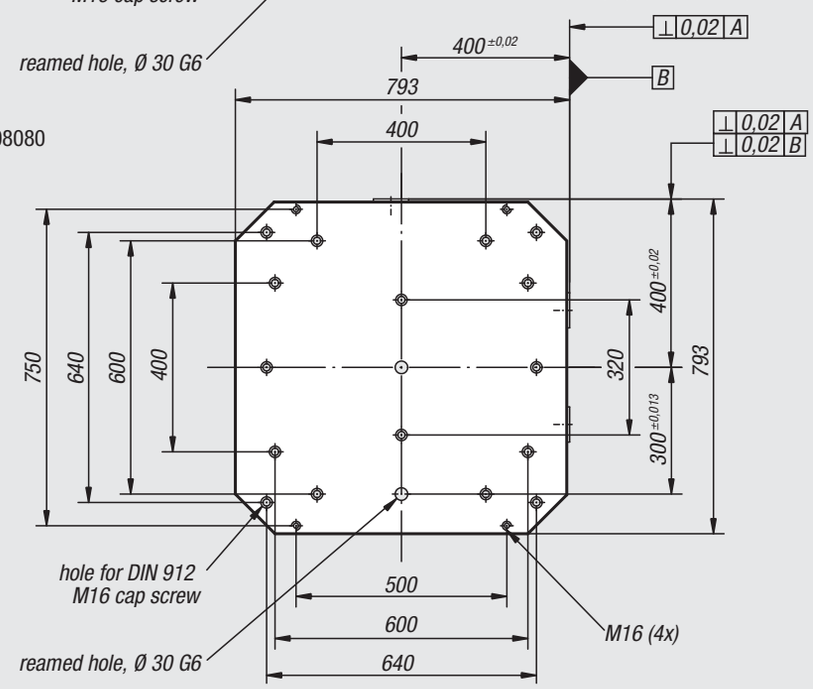

Subplates machined all sides

grey cast iron

Material:
GJL 250 annealed.

Sample order:
nlm 01150-002

Note:
The plates are also available with slots.
Type A:
ground contact faces (Ra 0.8).
Type B:
ground contact faces (Ra 0.8) and sides (Ra 1.6).
Type C:
milled contact faces and sides (Ra 3.2).

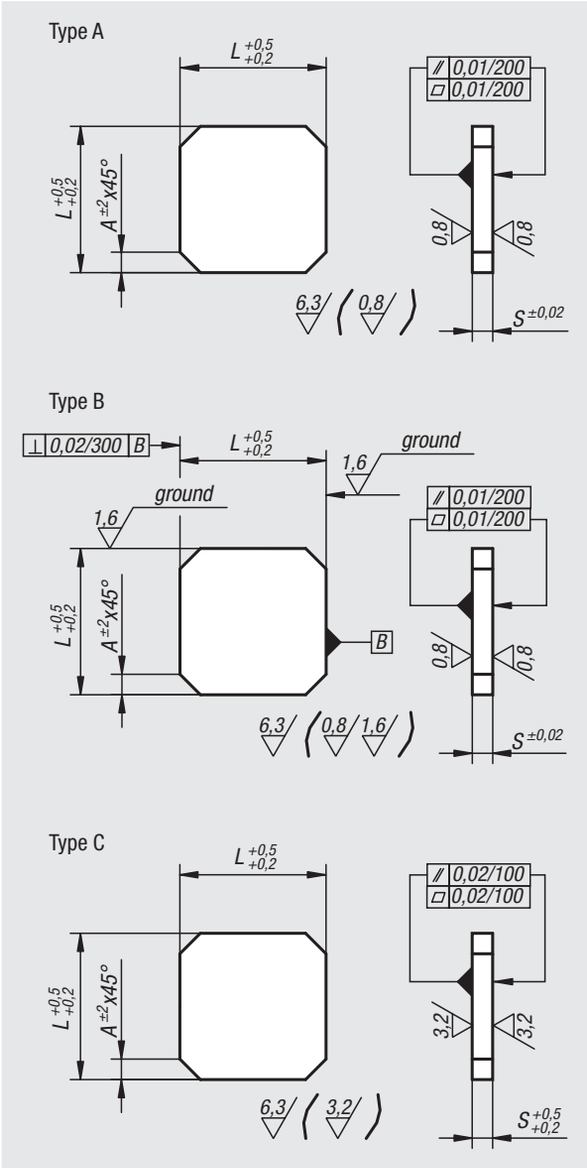

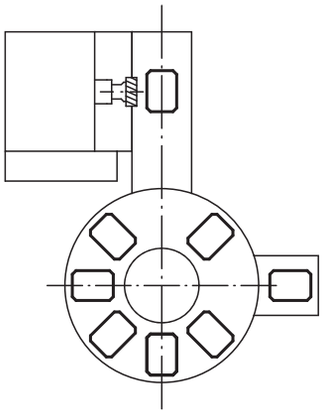

Order No. Type A	Order No. Type B	Order No. Type C	L	S	A
01150-001	01150-0011	01150-00111	200	25	25
01150-002	01150-0021	01150-00211	250	35	35
01150-004	01150-0041	01150-00411	320	40	40
01150-006	01150-0061	01150-00611	400	45	50
01150-008	01150-0081	01150-00811	500	50	60
01150-010	01150-0101	01150-01011	630	63	70
01150-012	01150-0121	01150-01211	800	70	100

01160

Block machined all sides

grey cast iron or aluminium

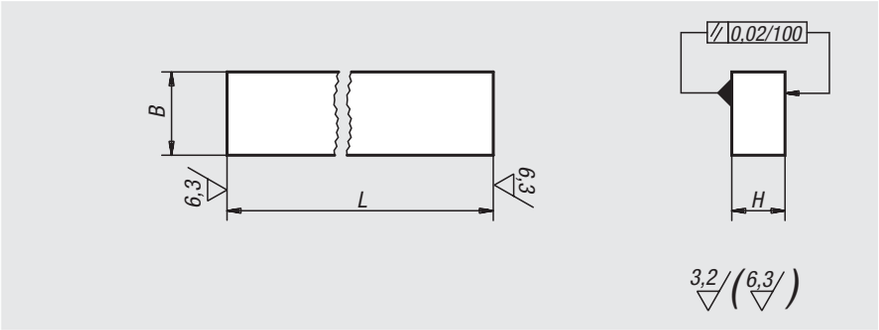

Material:
GJL 250 annealed or EN AW-7075

Sample order:
nlm 01160-05X300 (include length L)

Note:
The length L is cut by saw and is always supplied overlong.

Drawing reference:
machined surfaces:
±0.25 mm
tolerances of lengths:
≤200 mm: +1/+5
from 201 mm to 400 mm: +4/+15
> 400 mm: +13/+40

Order No. grey cast iron	Order No. aluminium	L = length	B	H
01160-02X	**01160-202X**	300	32	20
01160-03X	**01160-203X**	300	40	25
01160-04X	**01160-204X**	300/600/800	50	32
01160-05X	**01160-205X**	300/600/800	63	40
01160-06X	**01160-206X**	300/600/1000	80	50
01160-07X	**01160-207X**	300/600/1000	100	63
01160-08X	**01160-208X**	300/600	125	80

01180

Base plate with flanges

grey cast iron

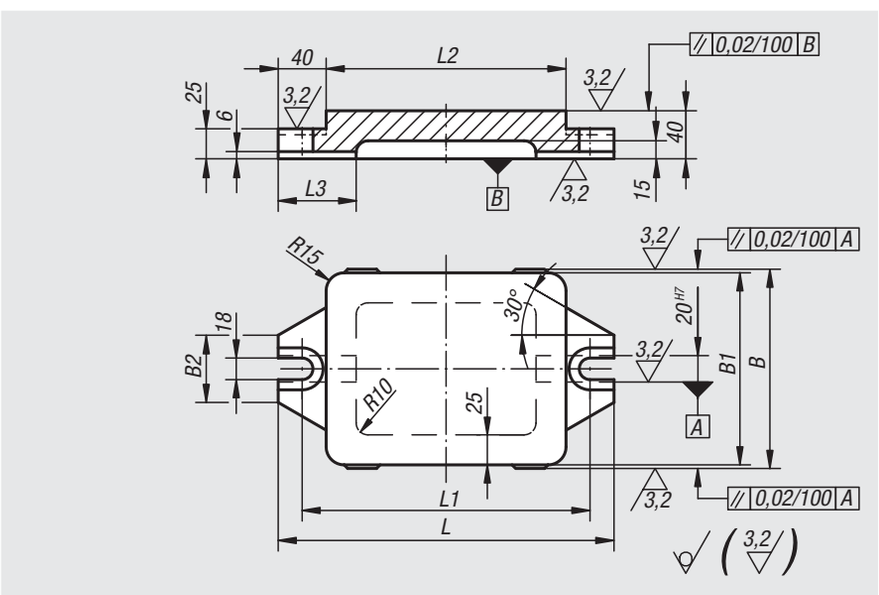

Material:
GJL 250 annealed.

Sample order:
nlm 01180-03

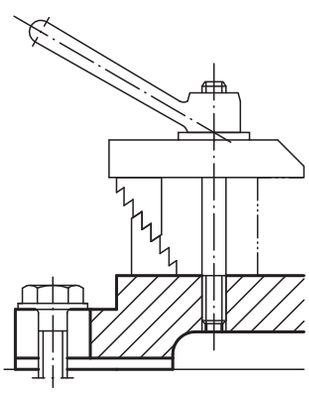

Order No.	L	L1	L2	L3	B	B1	B2
01180-01	240	200	160	65	166	160	56
01180-02	280	240	200	65	166	160	56
01180-03	330	290	250	70	206	200	74
01180-04	395	355	315	75	256	250	74

Angle plates

with or without T-slots cast iron

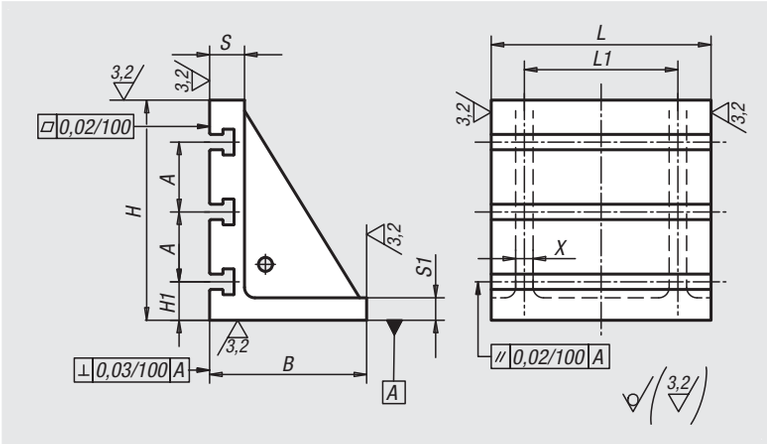

Material:
GJL 250 annealed.

Sample order:
nlm 01250-3203701

On request:
Other slot widths.

Drawing reference:
machined faces: +0.2 mm/ +0.5 mm
unmachined faces: ±2 mm

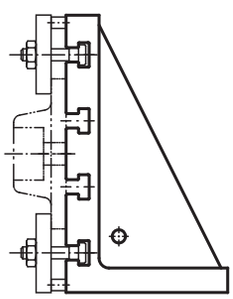

Order No. without slot	Order No. with T-slot	L	L1	B	H	H1	S	S1	A	X	T-slot
01250-100125	-	100	40	100	125	-	20	10	-	10	-
01250-125160	-	125	100	100	160	-	20	10	-	10	-
01250-200250	-	200	120	125	250	-	30	15	-	15	-
01250-250300	-	250	200	150	300	-	40	20	-	20	-
01250-320370	**01250-3203701**	320	280	200	370	-/65	50	25	-/80	25	-/14
01250-400450	**01250-4004501**	400	280	265	450	-/75	60	30	-/100	30	-/18
01250-500550	**01250-5005501**	500	360	315	550	-/75	70	35	-/100	35	-/18
01250-630640	**01250-6306401**	630	520	350	640	-/80	80	40	-/160	35	-/22
01250-700750	**01250-7007501**	700	600	400	750	-/135	80	40	-/160	40	-/22

Angle plates

aluminium

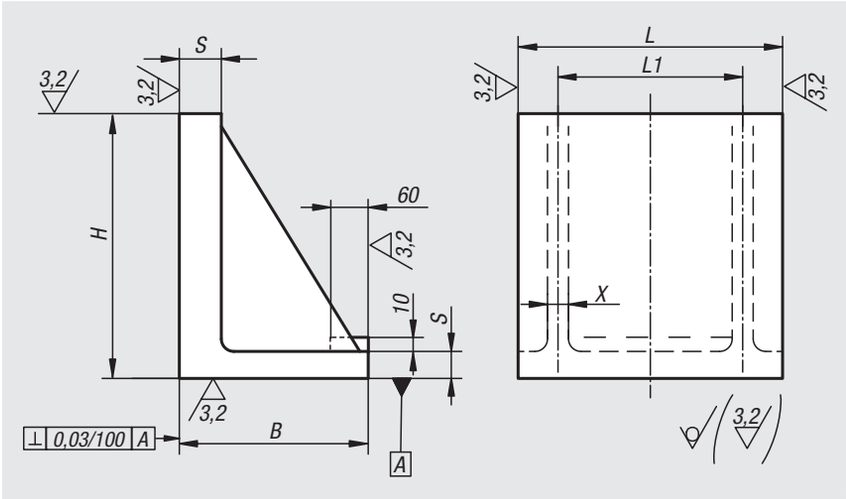

Material:
Aluminium (Rm 330 N/mm², 110 HB).

Sample order:
nlm 01252-260250

Drawing reference:
machined faces: +0.2 mm/ +0.5 mm
unmachined faces: ±2 mm

Order No.	B	H	L	L1	S	X
01252-260250	150	250	260	155	20	15
01252-335355	225	355	335	200	25	20
01252-410450	270	450	410	245	30	15

Cost-effective designing and machining with norelem:

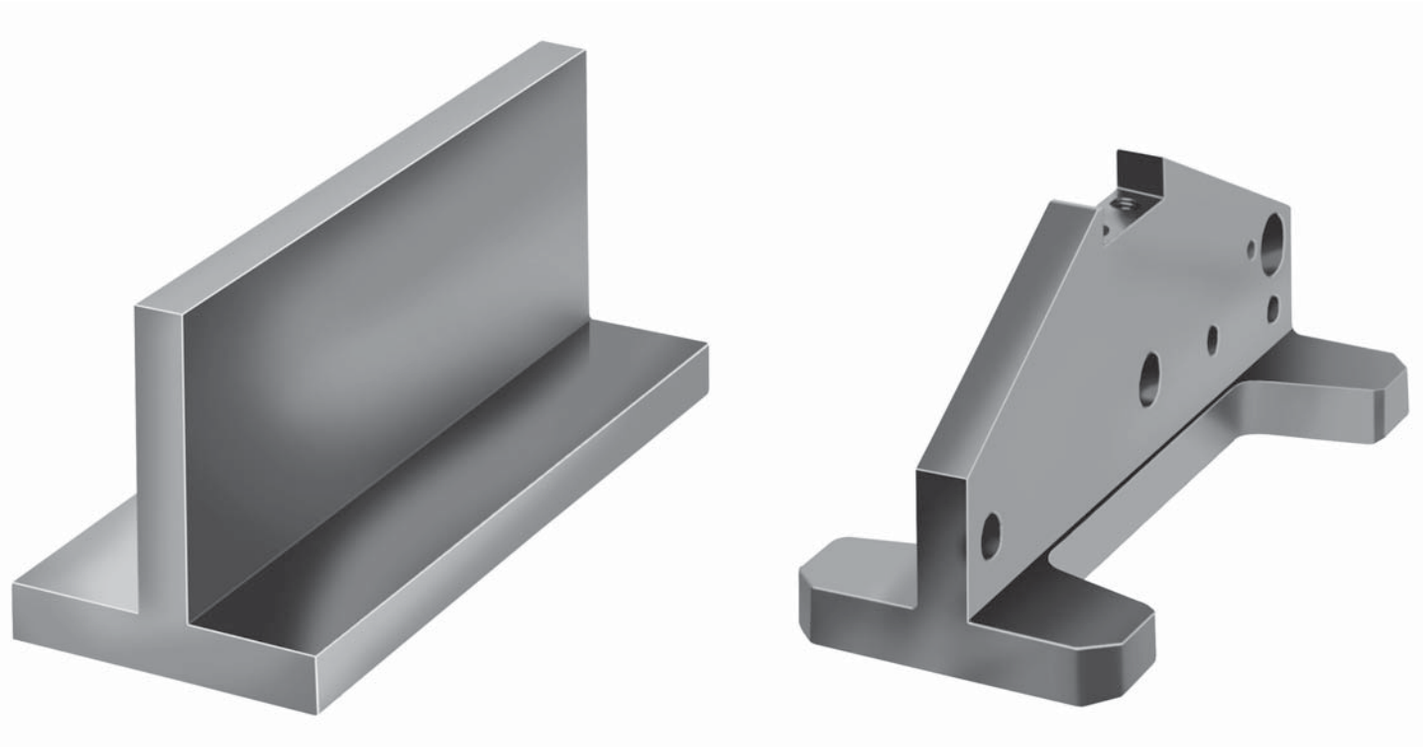

norelem basic element: T-profile

Finished product

Tombstones single-sided

Material:
GJL 300.

Version:
Reference surfaces precision machined. The clamping surface has 1 mm allowance.

Sample order:
nlm 01263-006376

Note:
The single-sided tombstones are matched to subplates for machine tools acc. to DIN 55201 and JIS 6337-1980. Ring bolts for lifting are supplied.

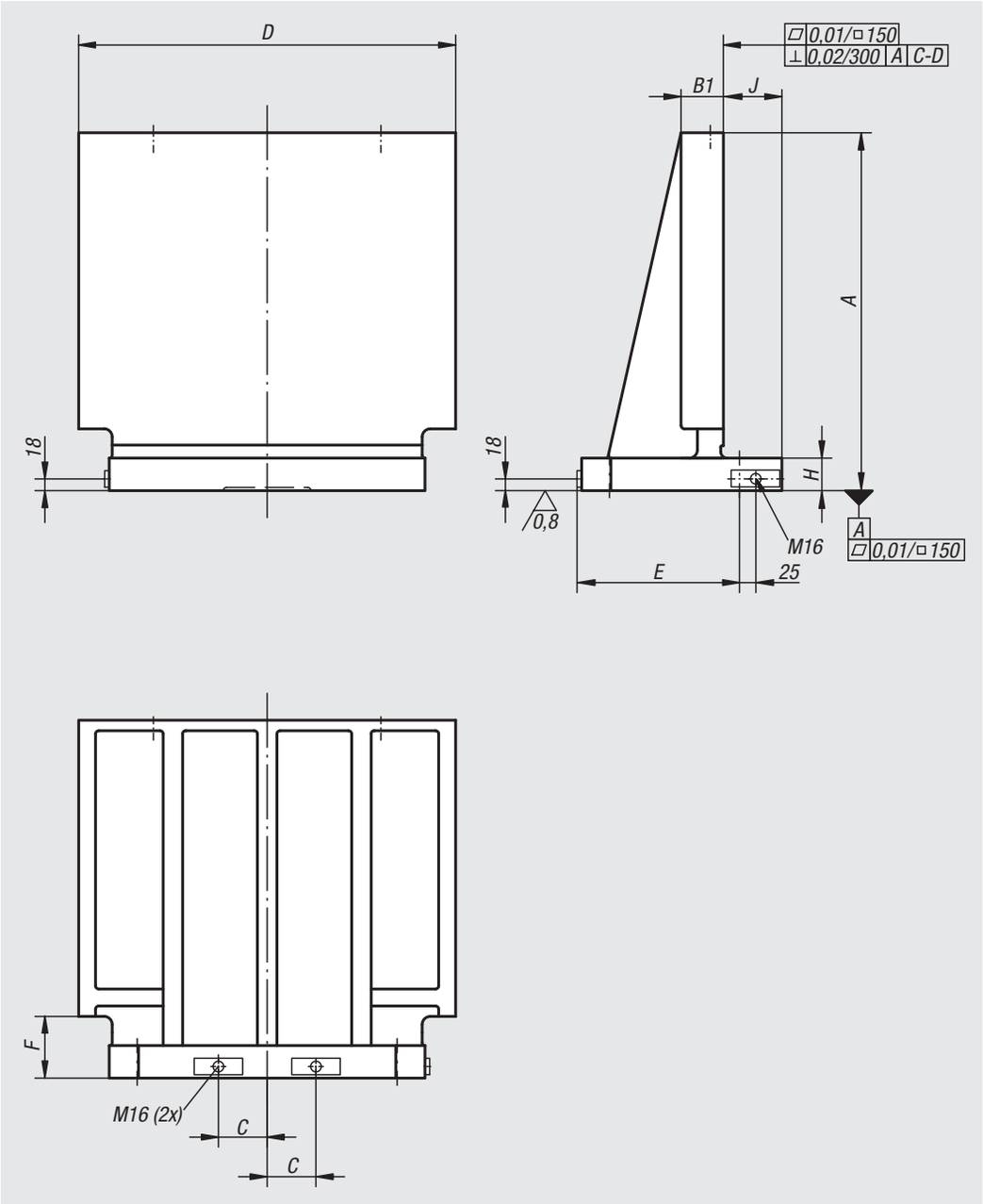

Order No.	A	B1	C	D	E	E1	F	G	H	J
01263-004047	450	61	55	470	200	24 ±0,2	85	20	45	89
01263-005058	550	66	75	580	250	24 ±0,2	95	20	50	89
01263-006376	700	76	100	760	315	49 ±0,2	100	25	55	114
01263-008090	800	81	135	900	400	49 ±0,2	100	25	60	114

Tombstones single-sided

01263-004047

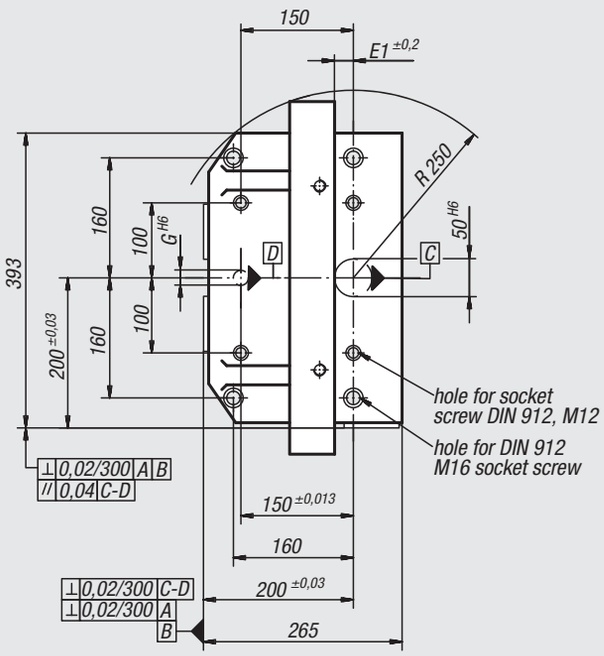

01263-005058

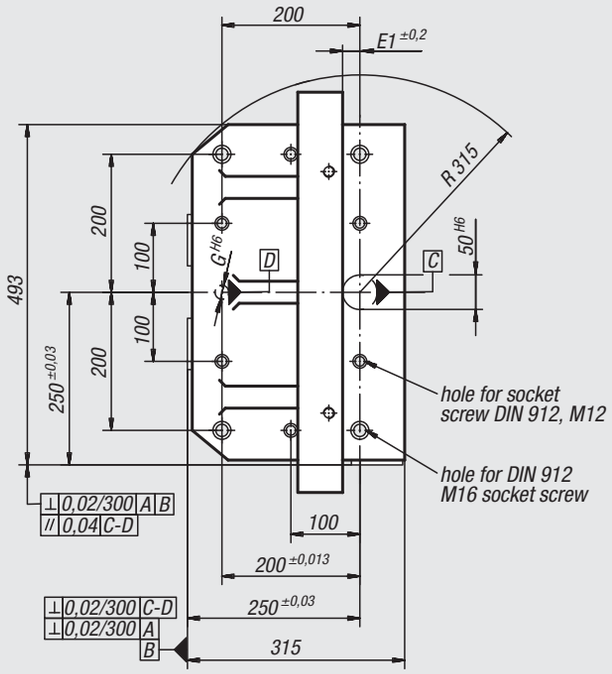

01263-006376

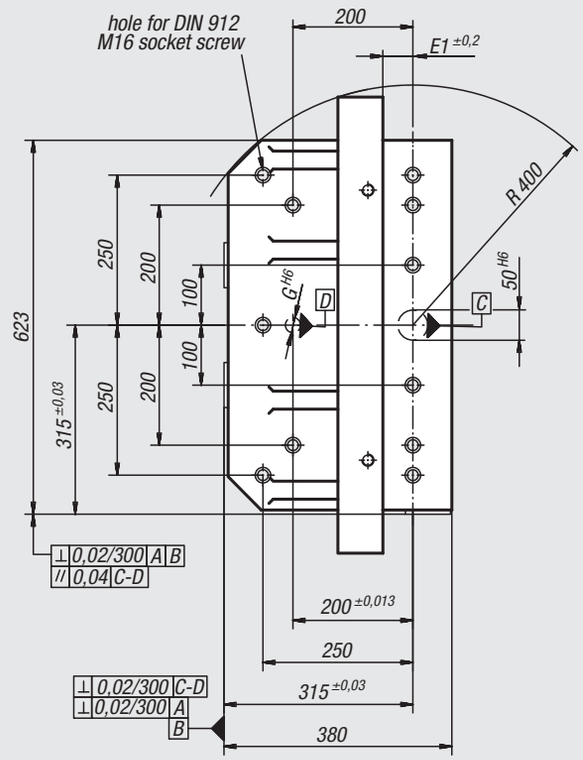

01263-008090

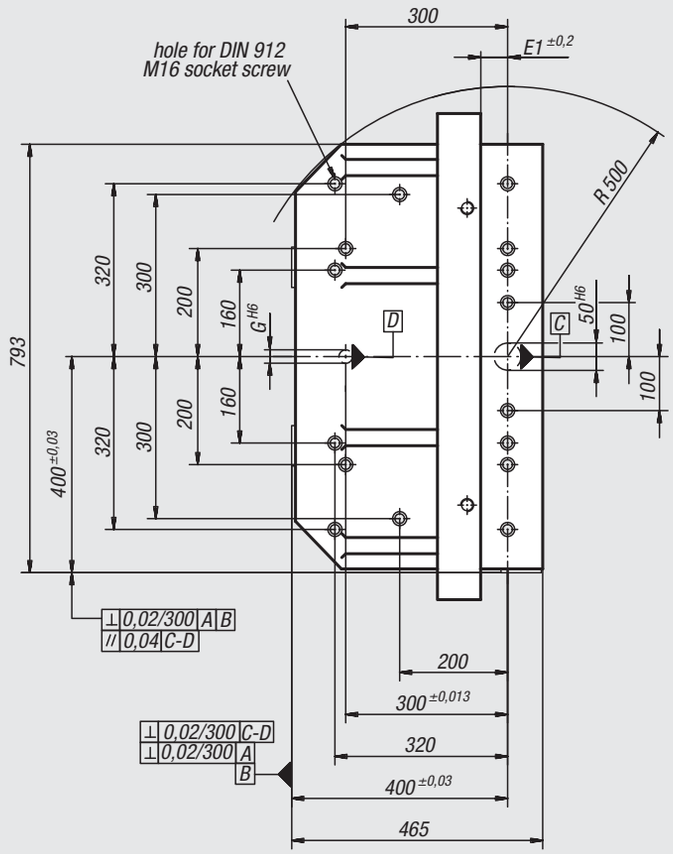

Tombstones double-sided

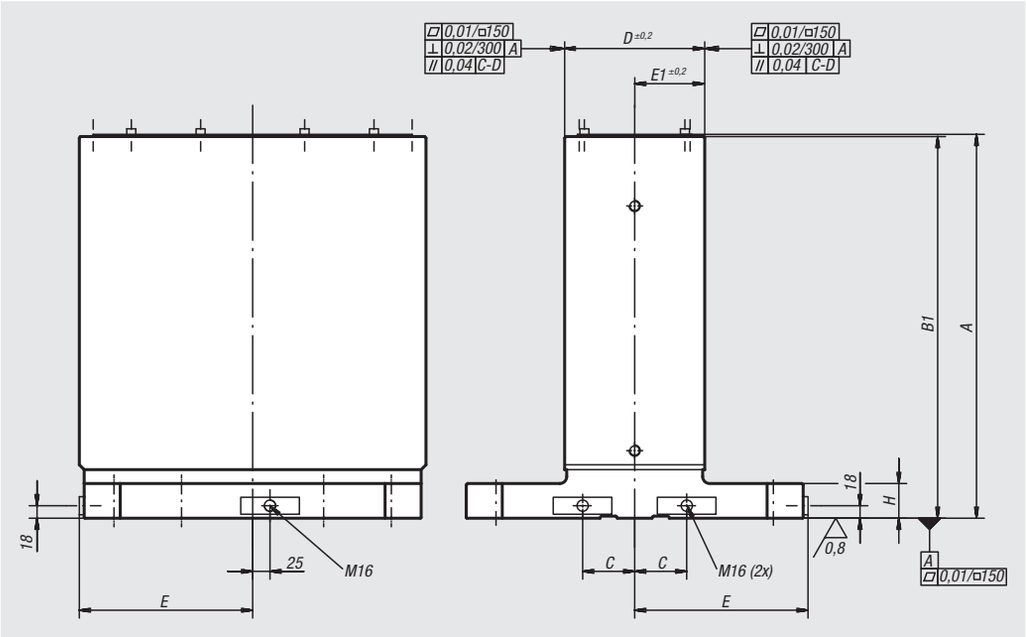

Material:
GJL 300.

Version:
Reference surfaces precision machined. The clamping surfaces have 0.5 mm allowance.

Sample order:
nlm 01265-005020

Note:
The double-sided tombstones are matched to subplates for machine tools acc. to DIN 55201 and JIS 6337-1980. Ring bolts for lifting are supplied. A cover prevents the cavity of the tombstone filling up with swarf.

Order No.	A	B1	C	D	E	E1	G	H
01265-005020	553	550	75	201±0,2	250	101,5 ±0,2	20	50
01265-006325	703	700	100	251±0,2	315	125,5±0,2	25	55
01265-008030	803	800	135	301±0,2	400	150,5±0,2	25	60
01265-0040151	553	550	55	151±0,2	200	75,5 ±0,2	20	50
01265-0050201	653	650	75	201±0,2	250	101,5±0,2	20	50
01265-0063251	803	800	100	251±0,2	315	125,5±0,2	25	55

Tombstones double-sided

01265-0040151

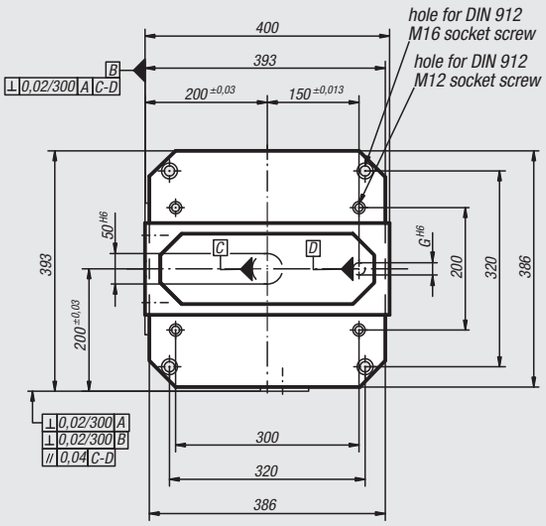

01265-005020
01265-0050201

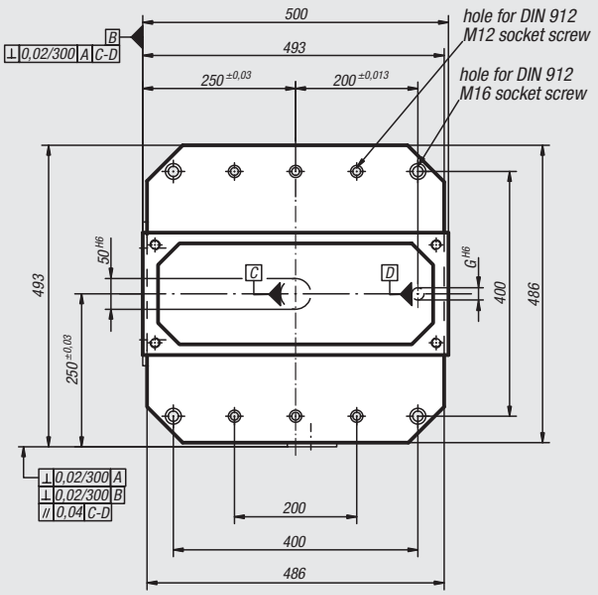

01265-006325
01265-0063251

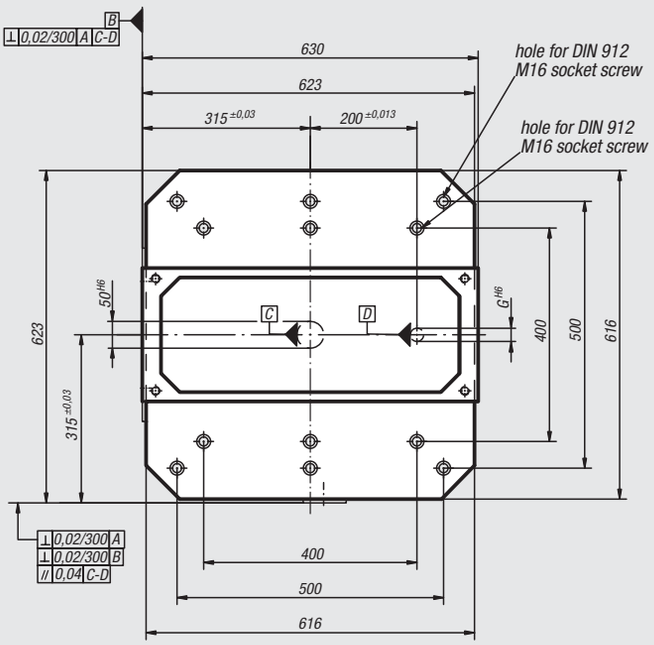

01265-008030

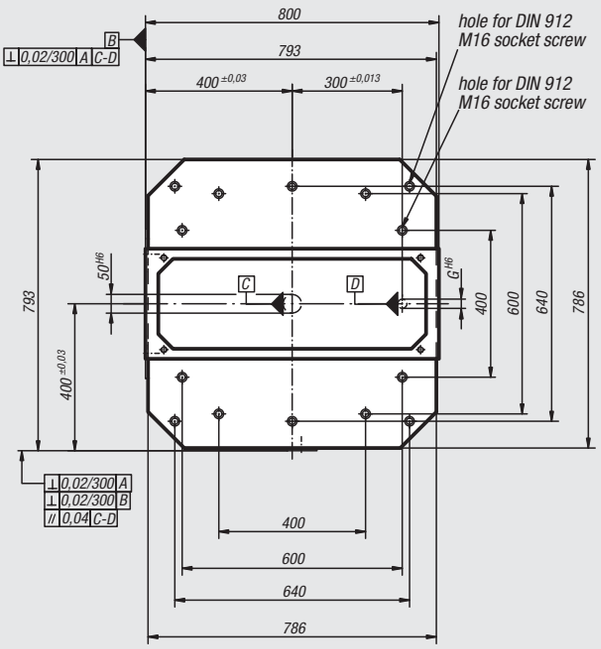

Tombstones window frame

Material:
GJL 300.

Version:
Reference surfaces precision machined

Sample order:
nlm 01267-123040

Note:
Subplates 01127 can be positioned and fastened to both sides of the window frame, permitting economical fixture exchanges. The window frames are positioned using centring bolts 03110 and slot guide nuts 03240. Ring bolts for lifting are supplied.

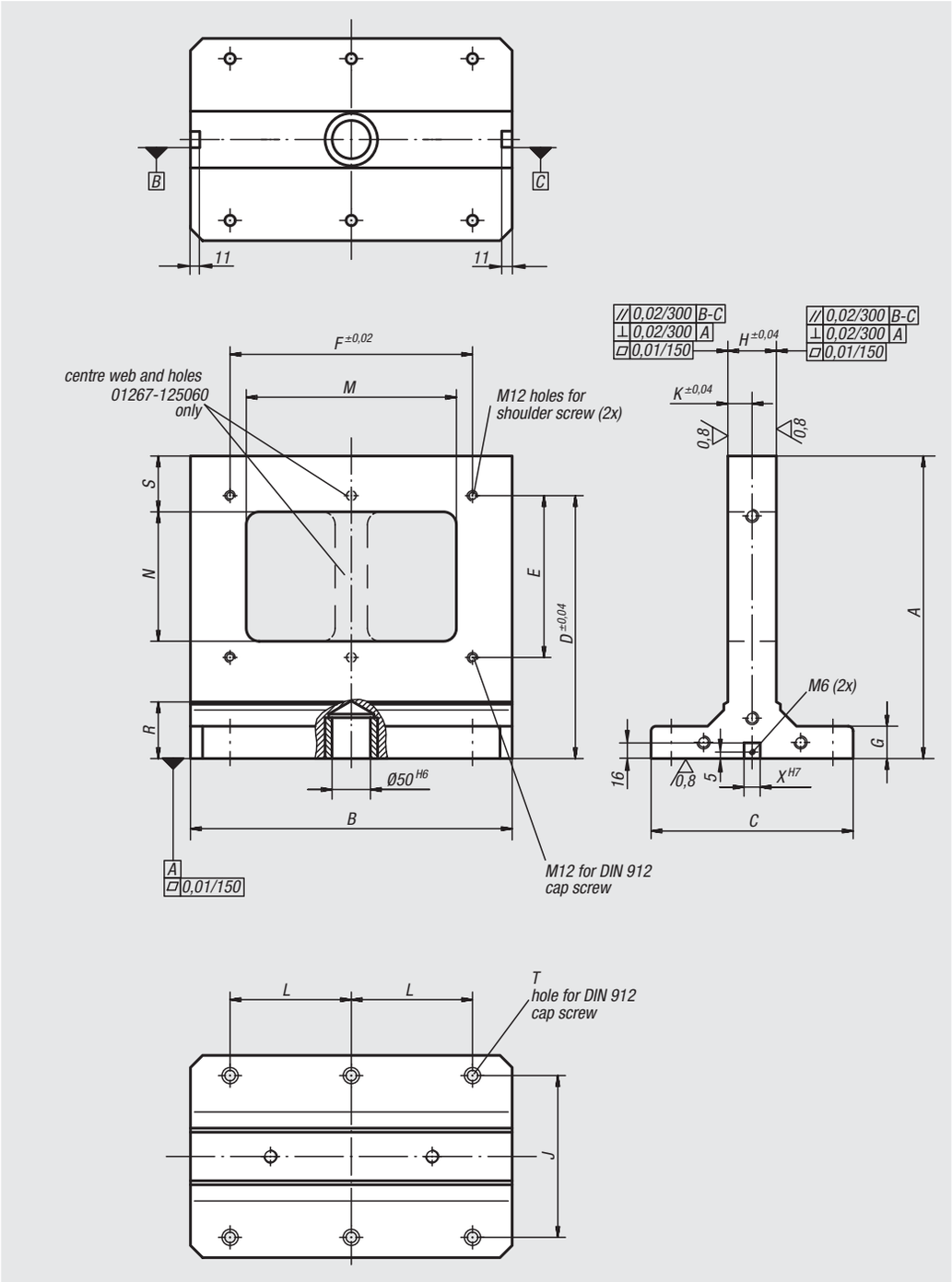

Order No.	A	B	C	D	E	F	G	H	J	K	L	M	N	R	S	T	X
01267-123040	374	398	250	325	200	300	40	60	200	30	150	260	160	70	69	M12	14
01267-124050	474	498	250	425	300	400	40	70	200	35	200	360	260	70	69	M12	14
01267-125060	574	598	300	525	400	500	50	70	200	35	200	458	360	75	70	M16	18

Tombstones double-sided

grey cast iron

Material:
GJL 250

Version:
Reference surfaces precision machined.

Sample order:
nlm 01270-320125

Note:
Ring bolts for lifting are supplied. A cover prevents the cavities filling up with swarf.

Drawing reference:
machined faces: +0.2 mm/ +0.5 mm
unmachined faces: ±2 mm

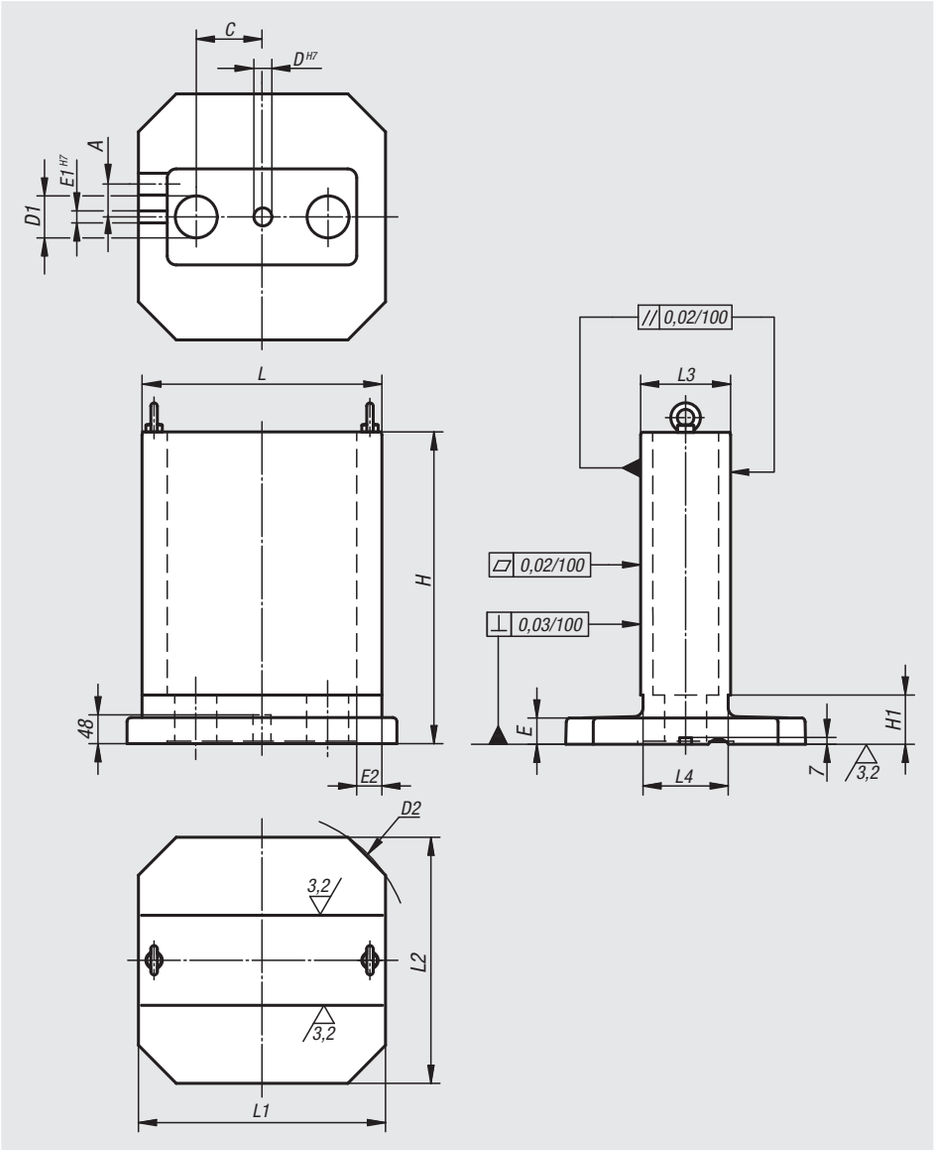

Order No.	A	C	D	D1	D2	E	E1	E2	H	H1	L	L1	L2	L3	L4
01270-320125	32,5	75	30	50	400	40	20	40	378	65	320	332	330	125	115
01270-400150	50	120	30	70	500	40	20	42	485	80	400	412	410	150	142
01270-500200	55	150	30	100	630	40	20	53	603	90	500	512	510	200	190

01280

Circular plates

steel

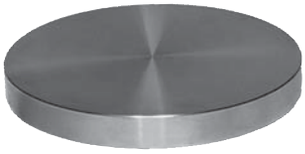

Material:
Carbon steel 1.1181.

Sample order:
nlm 01280-06X25
(include dimension S)

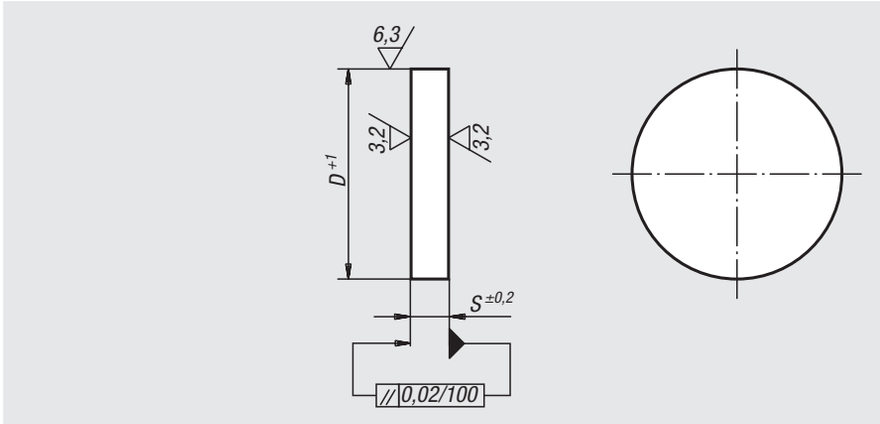

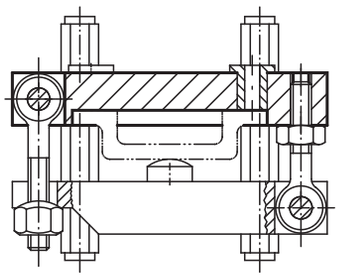

Order No.	S	D
01280-01X	16/20/25	140
01280-02X	16/20/25	180
01280-03X	16/20/25	220
01280-04X	16/20/25	280
01280-05X	20/25/32	355
01280-06X	25/32	400
01280-07X	25/32	450
01280-08X	36	500

01320

Circular plates

grey cast iron or aluminium

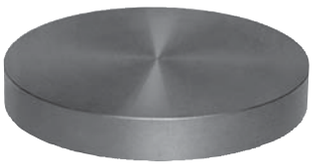

Material:
GJL 250 annealed or EN AW-7075.

Sample order:
nlm 01320-208

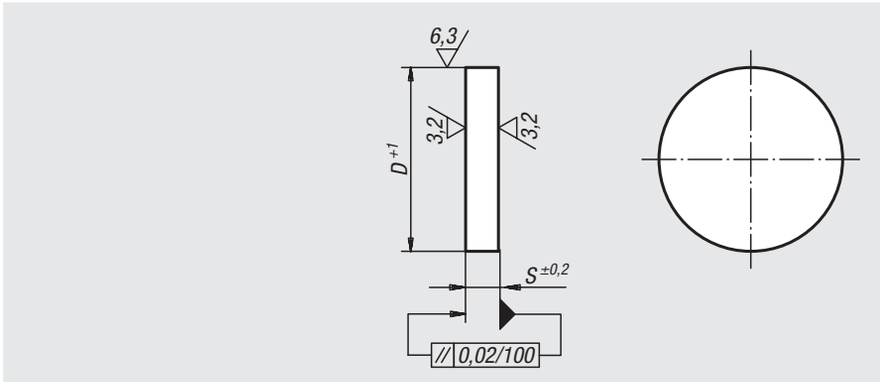

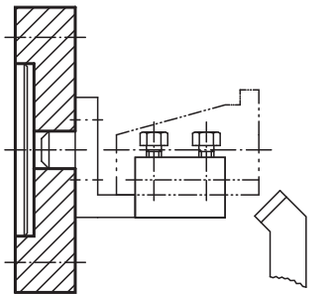

Order No. grey cast iron	Order No. aluminium	D	S
01320-01	**01320-201**	63	14
01320-02	**01320-202**	80	20
01320-03	**01320-203**	100	20
01320-04	**01320-204**	125	25
01320-05	**01320-205**	160	32
01320-06	**01320-206**	200	32
01320-07	**01320-207**	250	36
01320-08	**01320-208**	315	40
01320-09	**01320-209**	400	45
01320-10	**01320-210**	500	50

L-profiles

grey cast iron or aluminium

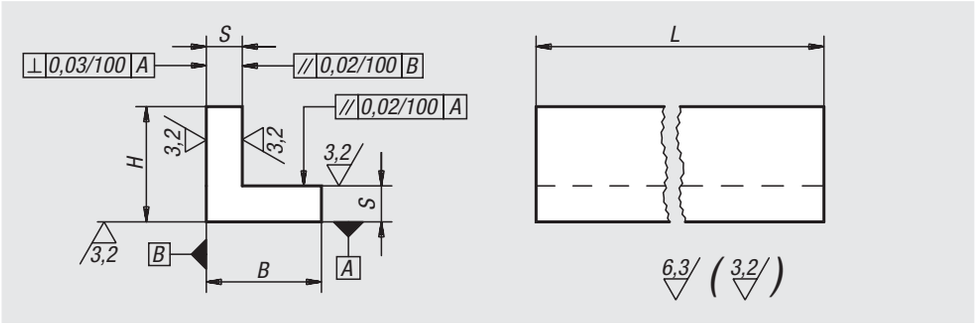

Material:
GJL 250 annealed or EN AW-7075.

Sample order:
nlm 01380-04X300
(include length L)

Note:
The length L is cut by saw and is always supplied overlong.

Drawing reference:
machined faces: ±0.25 mm
length tolerance:
≤200 mm: +3/+10
>200 mm ≤590 mm: +8/+15
≥600 mm: +20/+50

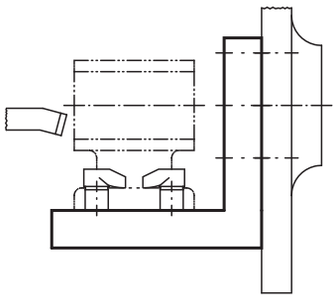

Order No. grey cast iron	Order No. aluminium	L = length	B	H	S
01380-01X	**01380-201X**	150/300	32	32	10
01380-02X	**01380-202X**	150/300	40	40	12
01380-03X	**01380-203X**	150/300	50	50	12
01380-04X	**01380-204X**	150/300	63	63	12
01380-05X	**01380-205X**	200/300/600/800	80	80	16
01380-06X	**01380-206X**	200/300/600/1000	100	100	20
01380-07X	**01380-207X**	200/300/600/1000	125	125	20
01380-08X	**01380-208X**	200/300/600	160	160	25
01380-09X	**01380-209X**	200/300/600	200	200	32
01380-10X	**01380-210X**	300/600	250	250	36
01380-11X	-	300/600	315	315	36

01440

L-profiles unequal

grey cast iron or aluminium

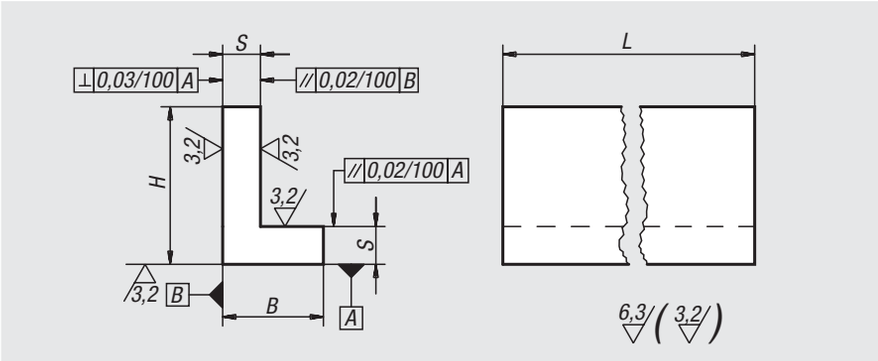

Material:
GJL 250 annealed or EN AW-7075.

Sample order:
nlm 01440-03X600
(include length L)

Note:
The length L is cut by saw and is always supplied overlong.

Drawing reference:
machined faces: ±0.25 mm
length tolerance:
≤200 mm: +3/+10
>200 mm ≤590 mm: +8/+15
≥600 mm: +20/+50

Order No. grey cast iron	Order No. aluminium	L = length	B	H	S
01440-01X	**01440-201X**	150/300	32	50	12
01440-02X	**01440-202X**	150/300	40	63	12
01440-03X	**01440-203X**	200/300/600/800	63	80	16
01440-04X	**01440-204X**	200/300/600/1000	80	100	20
01440-05X	**01440-205X**	200/300/600/1000	100	125	20
01440-06X	**01440-206X**	200/300/600	125	160	25
01440-07X	**01440-207X**	200/300/600	160	200	32
01440-08X	**01440-208X**	300/600	200	250	36
01440-09X	**01440-209X**	300/600	250	315	36

01520

L profile with reinforcing ribs

grey cast iron

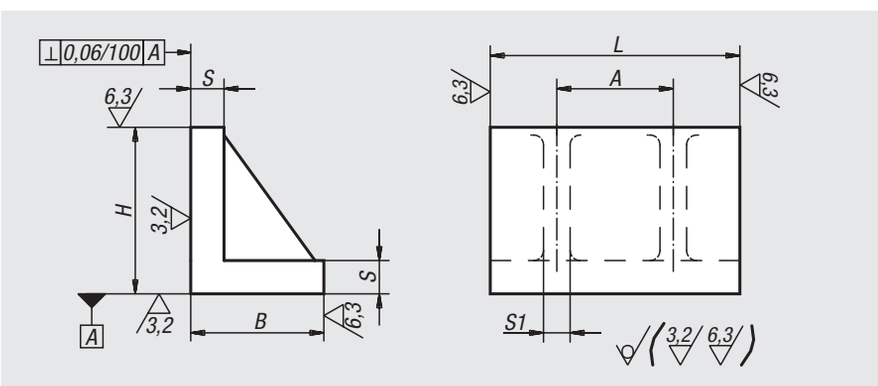

Material:
GJL 250 annealed.

Sample order:
nlm 01520-04X400
(include length L)

Note:
Angle plates with lengths 150 mm and 200 mm have only one reinforcing rib. The length L is cut by saw and is always supplied overlong.

Drawing reference:
machined faces: ±0.25 mm
unmachined faces: ±2 mm
length tolerance:
≤200 mm: +2/+5
>200 mm: +10/+20

Order No.	L = length	B	H	S	S1	A
01520-01X	150/300	80	100	20	16	160
01520-02X	150/300	100	125	22	18	160
01520-03X	150/300	125	160	25	20	160
01520-04X	200/400	160	200	32	22	200
01520-05X	200/400	200	250	36	25	200

01560

H-profiles

grey cast iron or aluminium

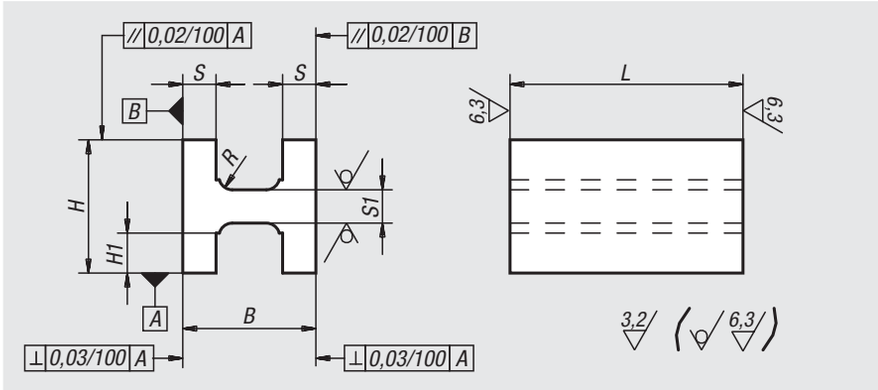

Material:
GJL 250 annealed or EN AW-7075.

Sample order:
nlm 01560-04X300
(include length L)

Note:
The length L is cut by saw and is always supplied overlong.

Drawing reference:
machined faces: ±0.25 mm
unmachined faces: ±2 mm
length tolerance:
≤200 mm: +3/+10
>200 mm ≤590 mm: +8/+15
≥600 mm: +20/+50

Order No. grey cast iron	Order No. aluminium	L = length	B	H	H1	S	S1	R
01560-03X	**01560-203X**	600	80	80	25	16	21	6
01560-04X	**01560-204X**	300/600	100	100	32	20	26	8
01560-05X	**01560-205X**	200/300/600	125	125	45	20	26	8

01580

T-profiles machined all sides

grey cast iron or aluminium

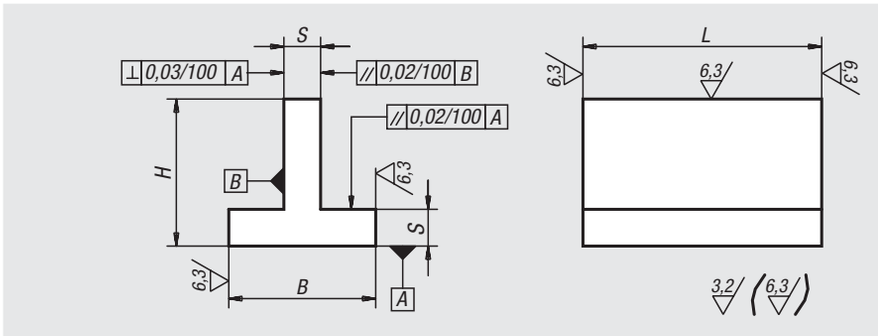

Material:
GJL 250 annealed or EN AW-7075.

Sample order:
nlm 01580-05X300
(include length L)

Note:
The length L is cut by saw and is always supplied overlong.

On request:
Lengths 800 mm and 1000 mm in cast iron.

Drawing reference:
machined faces: ±0.25 mm
unmachined faces: ±2 mm
length tolerance:
≤200 mm: +3/+10
>200 mm ≤590 mm: +8/+15
≥600 mm: +20/+50

Order No. grey cast iron	Order No. aluminium	L = length	B	H	S
01580-01X	**01580-201X**	300	40	40	10
01580-02X	**01580-202X**	150/300	63	63	12
01580-03X	**01580-203X**	300/600/800	80	80	16
01580-04X	**01580-204X**	300/600/1000	100	100	20
01580-05X	**01580-205X**	300/600/1000	125	125	20
01580-06X	**01580-206X**	300/600	160	160	25
01580-07X	**01580-207X**	300/600	200	200	32

01640

V-block machined all sides

grey cast iron or aluminium

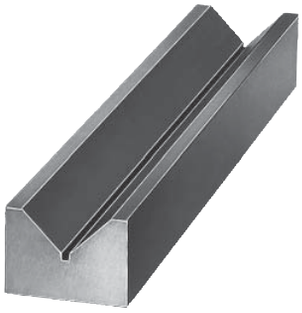

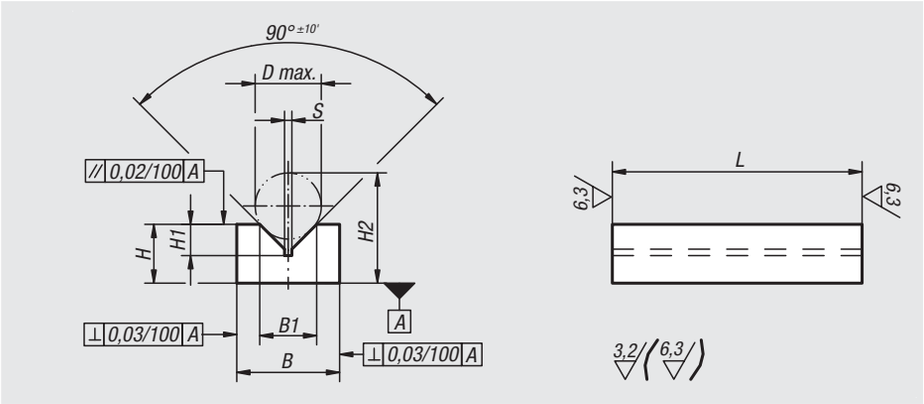

Material:
GJL 250 annealed or EN AW-7075.

Sample order:
nlm 01640-05X200
(include length L)

Note:
The length L is cut by saw and is always supplied overlong.

Drawing reference:
machined faces: ±0.25 mm
length tolerance:
≤200 mm: +3/+10
>200 mm ≤590 mm: +8/+15
≥600 mm: +20/+50

Order No. grey cast iron	Order No. aluminium	L = length	B	B1	H	H1	H2	D max.	S
01640-01X	**01640-201X**	100/200	25	15,5	16	8,5	30	18	2
01640-02X	**01640-202X**	100/200	36	21,9	20	11	38	24	2
01640-03X	**01640-203X**	100/200	40	26	25	13,5	47	29	2,5
01640-04X	**01640-204X**	200/300/600	50	31,7	36	17	66	38	2,5
01640-05X	**01640-205X**	200/300/600	70	50	50	26	95	58	3
01640-06X	**01640-206X**	200/300/600	100	79,3	70	41	139	90	4

01660

V-block machined all sides

extra wide, grey cast iron

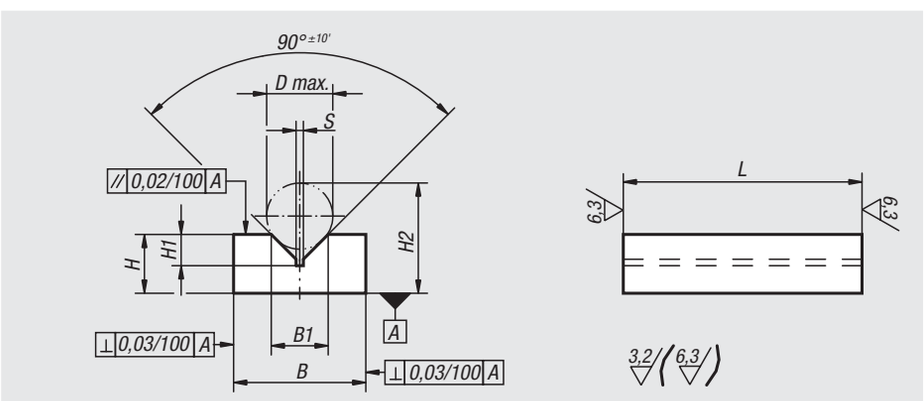

Material:
GJL 250 annealed.

Sample order:
nlm 01660-04X00
(include length L)

Note:
The length L is cut by saw and is always supplied overlong.

Drawing reference:
machined faces: ±0.25 mm
length tolerance:
≤200 mm: +3/+10
>200 mm ≤590 mm: +8/+15
≥600 mm: +20/+50

Order No.	L = length	B	B1	H	H1	H2	D max.	S
01660-01X	100/200	36	15,5	16	8,5	30	18	2
01660-02X	100/200	50	21,9	25	11	43	24	2
01660-03X	100/200	63	26	32	13,5	54	29	2,5
01660-04X	200/300/600	100	31,7	40	17	70	38	2,5
01660-05X	200/300/600	125	50	56	26	101	58	3
01660-06X	200/300/600	160	79,3	80	41	149	90	4

U-profiles machined all sides

grey cast iron or aluminium

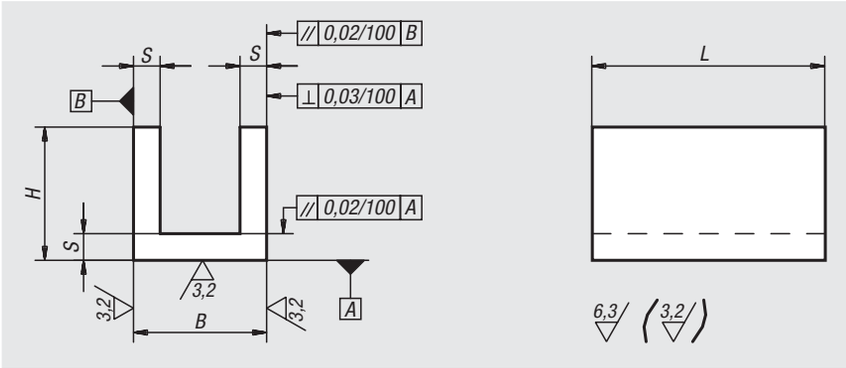

Material:
GJL 250 annealed or EN AW-7075.

Sample order:
nlm 01680-06X300
(include length L)

Note:
The length L is cut by saw and is always supplied overlong.

On request:
Lengths 800 mm and 1000 mm in cast iron.

Drawing reference:
machined faces: ±0.25 mm
length tolerance:
≤200 mm: +3/+10
>200 mm ≤590 mm: +8/+15
≥600 mm: +20/+50

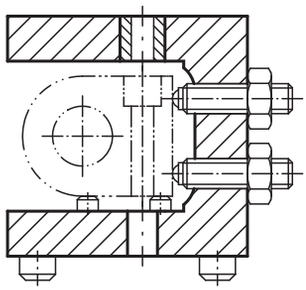

Order No.	Main material	L = length	B	H	S
01680-01X	grey cast iron	150/300	32	32	8
01680-02X	grey cast iron	150/300	40	40	10
01680-03X	grey cast iron	150/300/600	63	63	12
01680-04X	grey cast iron	200/300/600/800	80	80	16
01680-05X	grey cast iron	200/300/600/1000	100	100	20
01680-06X	grey cast iron	200/300/600/1000	125	125	20
01680-07X	grey cast iron	200/300/600	160	160	25
01680-08X	grey cast iron	200/300/600	200	200	32
01680-09X	grey cast iron	300/600	250	250	36
01680-10X	grey cast iron	300/600	250	200	36
01680-11X	grey cast iron	300/600	315	200	36
01680-201X	aluminium	150/300	32	32	8
01680-202X	aluminium	150/300	40	40	10
01680-203X	aluminium	150/300/600	63	63	12
01680-204X	aluminium	200/300/600/800	80	80	16
01680-205X	aluminium	200/300/600/1000	100	100	20
01680-206X	aluminium	200/300/600/1000	125	125	20
01680-207X	aluminium	200/300/600	160	160	25
01680-208X	aluminium	200/300/600	200	200	32
01680-209X	aluminium	300/600	250	250	36
01680-210X	aluminium	300/600	250	200	36
01680-211X	aluminium	300/600	315	200	36

01740

Square hollow profiles

grey cast iron

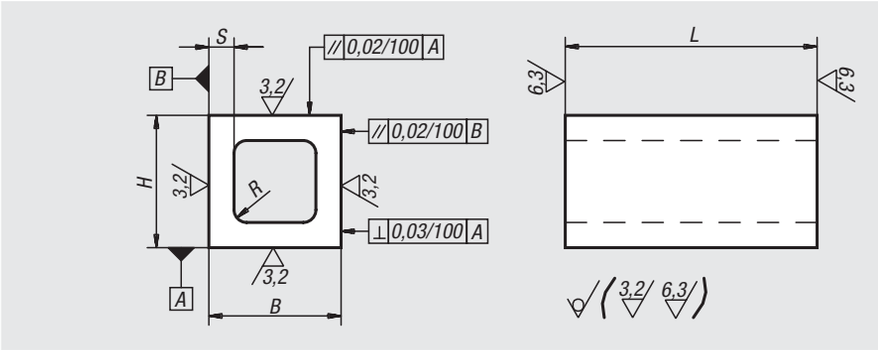

Material:
GJL 250 annealed.

Sample order:
nlm 01740-06X200 (include length L)

Note:
The length L is cut by saw and is always supplied overlong.

Drawing reference:
machined faces: ±0.25 mm
unmachined faces: ±2 mm
length tolerance:
≤200 mm: +3/+10
>200 mm ≤590 mm: +8/+15
≥600 mm: +20/+50

Order No.	L = length	B	H	≈ S	R
01740-04X	100/200	63	63	12	6
01740-05X	200/400	80	80	18	8
01740-06X	200/400	100	100	20	10
01740-07X	200/400/600	125	125	22	12
01740-08X	200/300/600	160	160	25	16
01740-09X	200/300/600	200	200	28	20
01740-12X	600	250	250	36	20
01740-15X	600	315	315	56	20

01760

Rectangular hollow profiles

grey cast iron

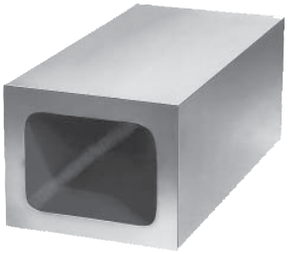

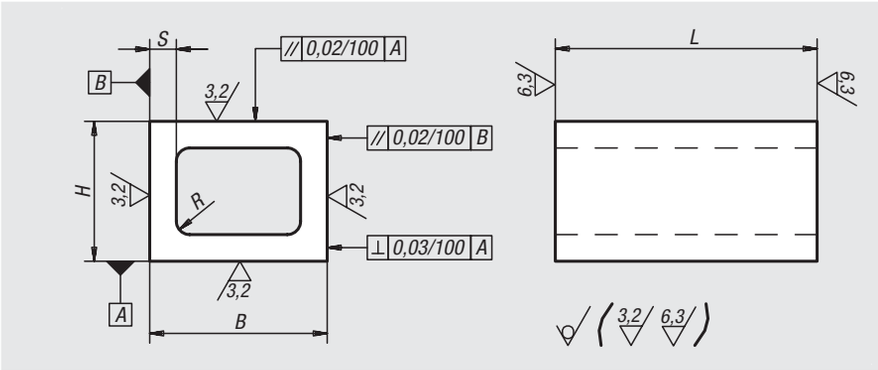

Material:
GJL 250 annealed.

Sample order:
nlm 01760-04X300 (include length L)

Note:
The length L is cut by saw and is always supplied overlong.

Drawing reference:
machined faces: ±0.25 mm
unmachined faces: ±2 mm
length tolerance:
≤200 mm: +3/+10
>200 mm ≤590 mm: +8/+15
≥600 mm: +20/+50

Order No.	L = length	B	H	≈ S	R
01760-01X	100/200	80	63	12	6
01760-02X	200/400	100	80	16	8
01760-03X	200/300/600	160	100	22	10
01760-04X	200/300/600	200	160	25	16
01760-05X	300/600	250	200	28	20

01780

Angle profiles 60°

grey cast iron

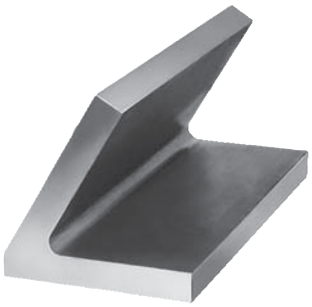

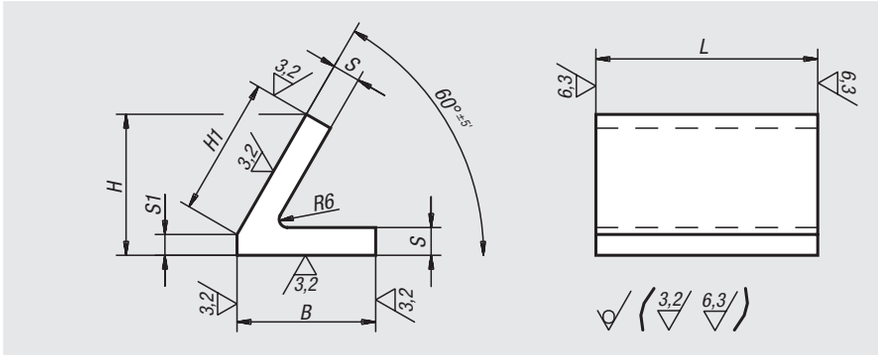

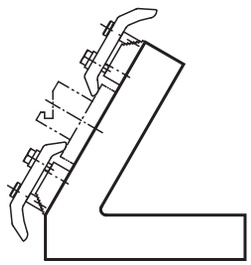

Material:
GJL 250 annealed.

Sample order:
nlm 01780-02X300 (include length L)

Note:
The length L is cut by saw and is always supplied overlong.

Drawing reference:
machined faces: ±0.25 mm
unmachined faces: ±2 mm
length tolerance:
≤200 mm: +3/+10
>200 mm ≤590 mm: +8/+15
≥600 mm: +20/+50

Order No.	L = length	B	H	H1	S	S1
01780-02X	300/600	100	101,5	100	20	15
01780-05X	300/600	200	197,5	200	32	24

01820

Angle profiles 45°

grey cast iron

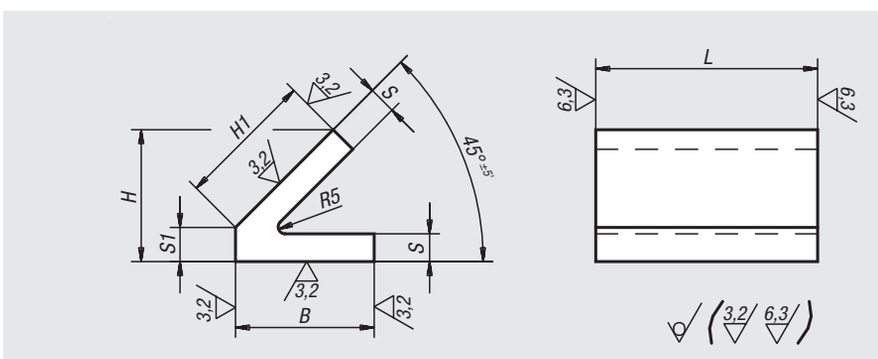

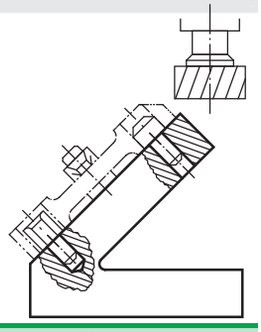

Material:
GJL 250 annealed.

Sample order:
nlm 01820-05X300 (include length L)

Note:
The length L is cut by saw and is always supplied overlong.

Drawing reference:
machined faces: ±0.25 mm
unmachined faces: ±2 mm
length tolerance:
≤200 mm: +3/+10
>200 mm ≤590 mm: +8/+15
≥600 mm: +20/+50

Order No.	L = length	B	H	H1	S	S1
01820-02X	300/600	100	95	100	20	24
01820-05X	300/600	200	181	200	32	40

Tombstones cube

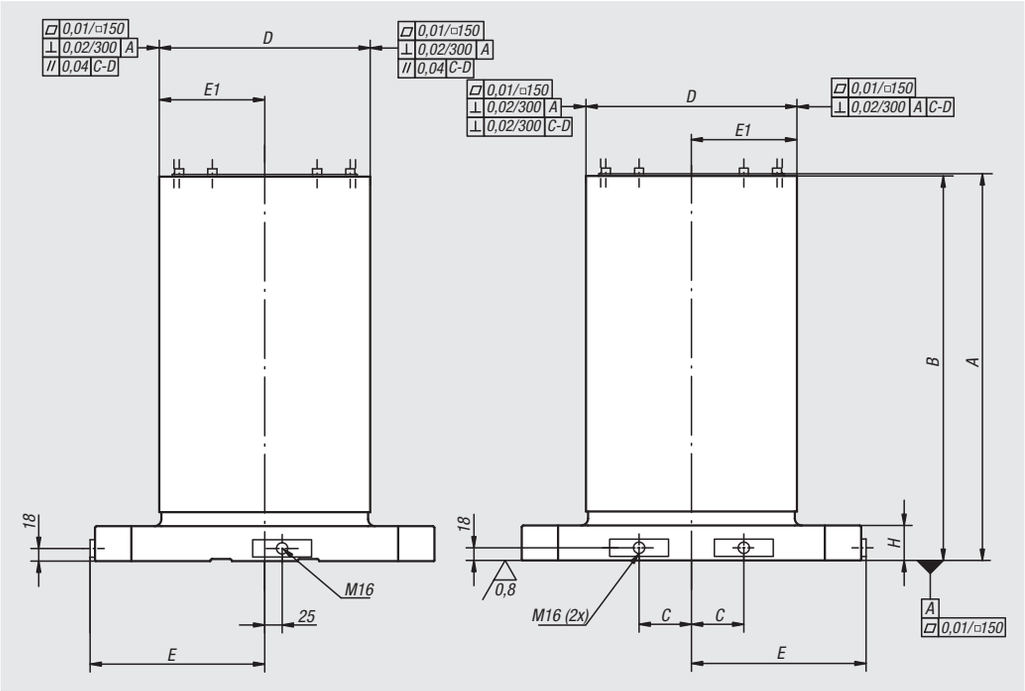

Material:
GJL 300.

Version:
Reference surfaces precision machined.
The clamping surfaces have 0.5 mm allowance.

Sample order:
nlm 01850-008050

Note:
The cube tombstones are matched to subplates for machine tools acc. to DIN 55201 and JIS 6337-1980.
Ring bolts for lifting are supplied. A cover prevents the cavities filling with swarf.

Order No.	A	B	C	D	E	E1	G	H
01850-005030	553	550	75	301 ±0,2	250	150,5 ±0,2	20	50
01850-006335	703	700	100	351 ±0,2	315	175,5 ±0,2	25	55
01850-008050	803	800	135	501 ±0,2	400	250,5 ±0,2	25	60
01850-0040251	553	550	55	251 ±0,2	200	125,5 ±0,2	20	50
01850-0050301	653	650	75	301 ±0,2	250	150,5 ±0,2	20	50
01850-0063351	803	800	100	351 ±0,2	315	175,5 ±0,2	25	55

Tombstones cube

01850-0040251

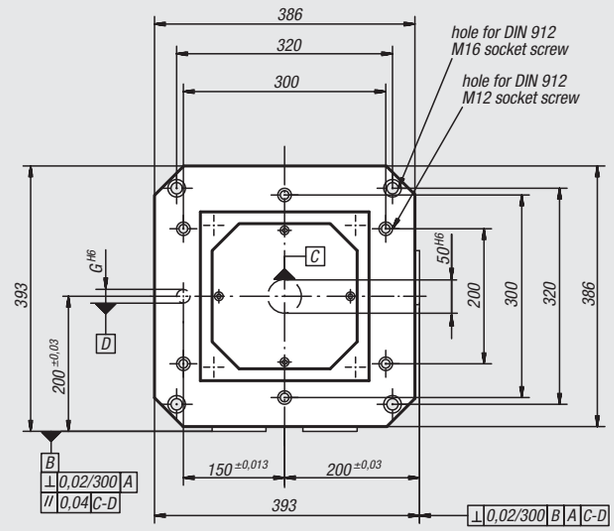

01850-005030
01850-0050301

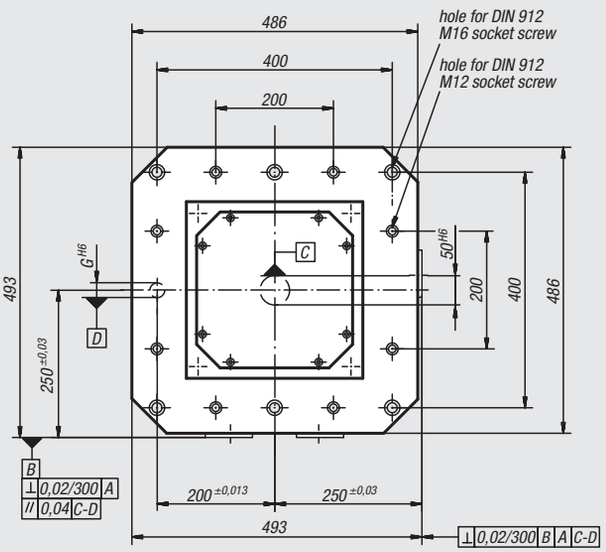

01850-006335
01850-0063351

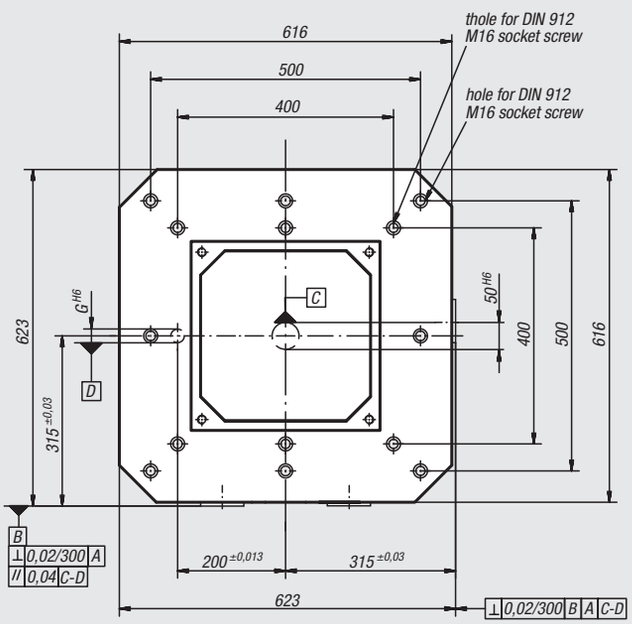

01850-008050

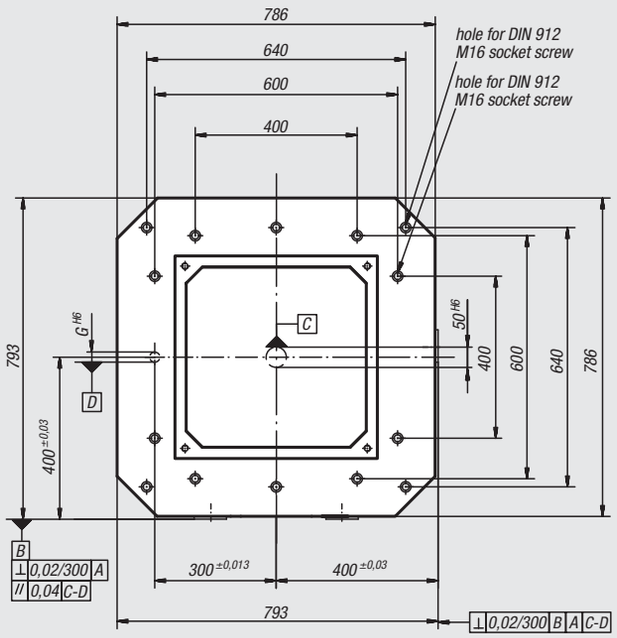

Tombstones cube

grey cast iron

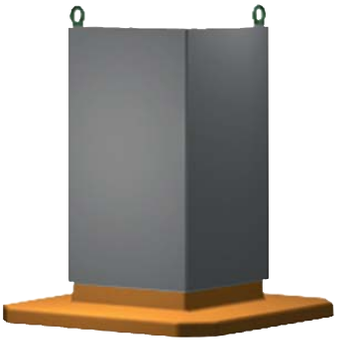

Material:
GJL 250

Version:
Reference surfaces precision machined

Sample order:
nlm 01852-320180

Note:
Ring bolts for lifting are supplied.
A cover prevents the cavities filling with swarf.

Drawing reference:
machined faces: +0.2 mm/ +0.5 mm
unmachined faces: ±2 mm

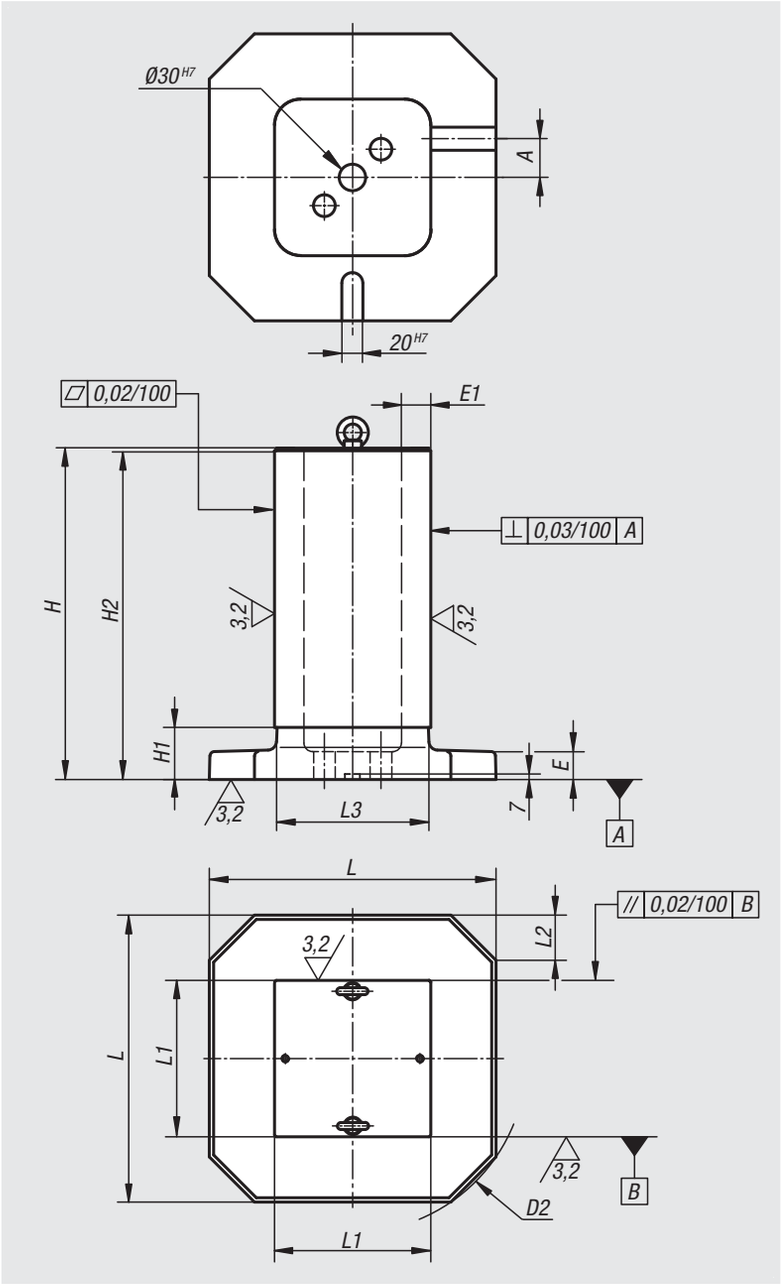

Order No.	A	D2	E	E1	H	H1	H2	L	L1	L2	L3
01852-320180	32,5	400	32	25	381	80	378	330	180	52	174
01852-400270	50	500	32	32	485	60	482	410	270	62	262
01852-500320	55	630	40	40	603	100	600	510	320	70	312

02000

Self-aligning pads
Fixture feet
Clamp rests
Support elements

Self-aligning pads

Material:
Body carbon steel.
Ball, ball bearing steel 1.2067.
Form D: Ball with POM insert.
Form H: Ball with POM insert.
Form K: Ball with carbide insert.
Form M has a carbide ball.

Version:
Body tempered and phosphated.
Ball hardened.
Form M ball nickel plated.

Sample order:
nlm 02000-120

Note:
Self-aligning pads serve as stops, supports and thrust pads in fixture constructions.

Ball secured against rotation.

* Valid only if the minimum bore depth is observed.

Drawing reference:
Form C: with male thread, flattened ball, smooth.
Form D: with male thread, flattened ball, with POM insert.
Form F: with male thread, flattened ball, diamond grip.
Form M: with male thread, flattened ball, diamond grip.
Form G: press fit, flattened ball, smooth.
Form H: press fit, flattened ball, with POM insert.
Form J: press fit, flattened ball, diamond grip.
Form K: press fit, flattened ball, with carbide insert.

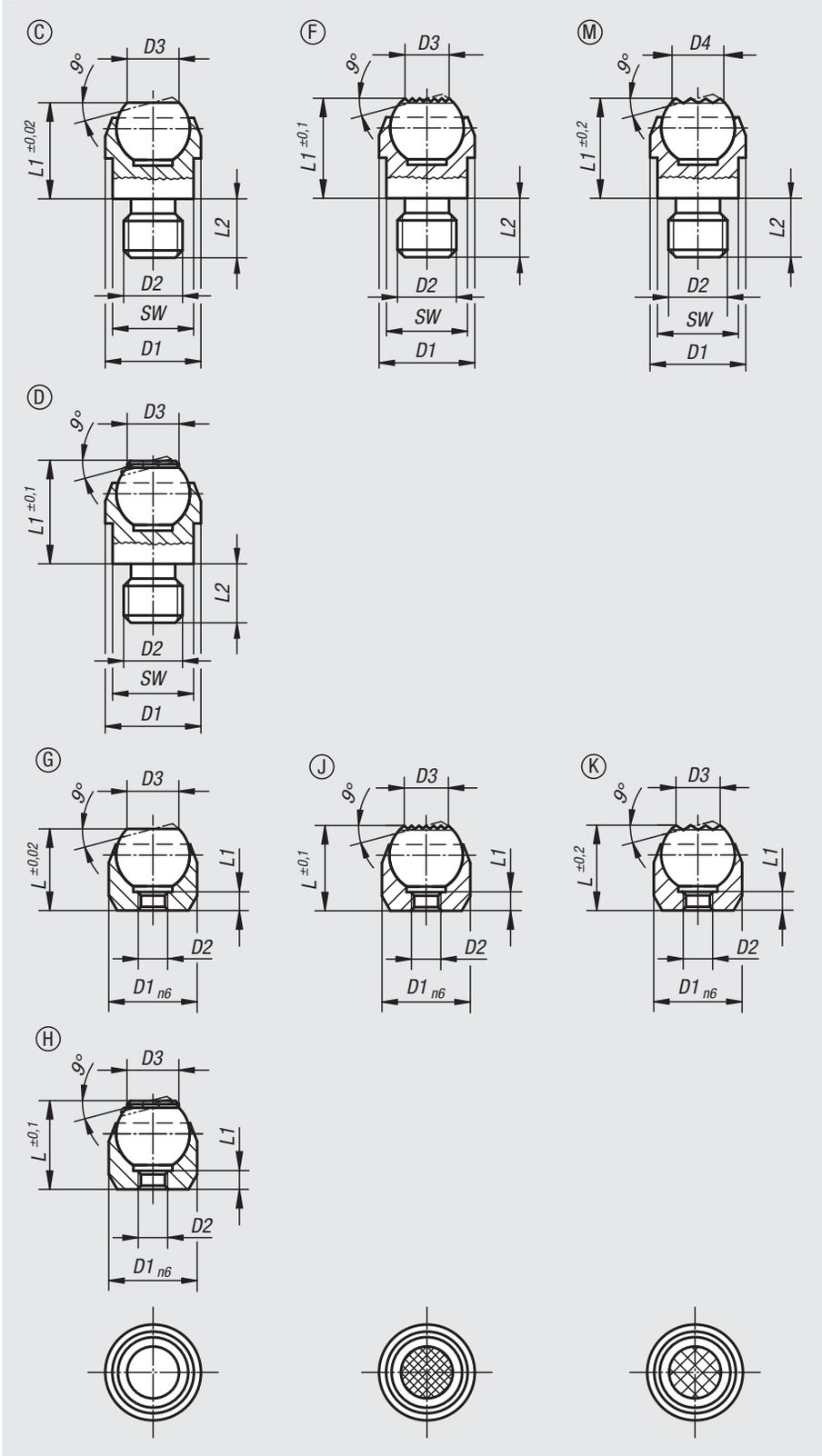

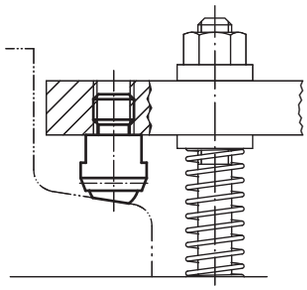

Self-aligning pads

Self-aligning pads

Order No.	Form	D1	D2	D3	L1	L2	Ball-Ø	SW	Load rating max. kN (static load only)
02000-108	C	13	M8	7,2	13	8	10	11	10
02000-110	C	20	M10	10,5	18	10	16	17	25
02000-112	C	20	M12	10,5	18	12	16	17	25
02000-116	C	30	M16	20	27	16	25	27	90
02000-120	C	50	M20	34,5	35	20	40	41	165

Order No.	Form	D1	D2	D3	L1	L2	Ball-Ø	SW	Load rating max. kN (static load only)
02000-208	D	13	M8	7,9	13	8	10	11	10
02000-210	D	20	M10	12,7	18	10	16	17	25
02000-212	D	20	M12	12,7	18	12	16	17	25

Order No.	Form	D1	D2	D3	L1	L2	Ball-Ø	SW	Load rating max. kN (static load only)
02000-308	F	13	M8	7,2	13	8	10	11	10
02000-310	F	20	M10	10,5	18	10	16	17	25
02000-312	F	20	M12	10,5	18	12	16	17	25
02000-316	F	30	M16	20	27	16	25	27	90
02000-320	F	50	M20	34,5	35	20	40	41	165

Order No.	Form	D1	D2	D4	L1	L2	Ball-Ø	SW	Load rating max. kN (static load only)
02000-908	M	13	M8	7,7	13,3	8	10	11	10
02000-910	M	20	M10	12	18	10	16	17	25
02000-912	M	20	M12	12	18	12	16	17	25

Order No.	Form	D1	D2	D3	L	L1	Ball-Ø	Receiving hole	Load rating max. kN (static load only)
02000-403	G	12	M3	7,2	11	3,5	10	ø 12 H7 x 6 min.	10*
02000-404	G	18	M4	10,5	17	4,4	16	ø 18 H7 x 8 min.	25*
02000-405	G	28	M5	20	25	6,3	25	ø 28 H7 x 13 min.	90*

Order No.	Form	D1	D2	D3	L	L1	Ball-Ø	Receiving hole	Load rating max. kN (static load only)
02000-503	H	12	M3	7,9	11	3	10	ø 12 H7 x 6 min.	10*
02000-504	H	18	M4	12,7	17	4	16	ø 18 H7 x 8 min.	25*
02000-505	H	28	M5	19,05	25	6	25	ø 28 H7X13 min.	90*

Order No.	Form	D1	D2	D3	L	L1	Ball-Ø	Receiving hole	Load rating max. kN (static load only)
02000-603	J	12	M3	7,2	11	3,5	10	ø 12 H7 x 6 min.	10*
02000-604	J	18	M4	10,5	17	4,4	16	ø 18 H7 x 8 min.	25*
02000-605	J	28	M5	20	25	6,3	25	ø 28 H7 x 13 min.	90*

Order No.	Form	D1	D2	D3	L	L1	Ball-Ø	Receiving hole	Load rating max. kN (static load only)
02000-803	K	12	M3	7,9	11	3	10	ø 12 H7 x 6 min.	10*
02000-804	K	18	M4	12,7	17	4	16	ø 18 H7 x 8 min.	25*
02000-805	K	28	M5	19,05	25	6	25	ø 28 H7X13 min.	90*

Self-aligning pads

swivel angle 14° and 20°

Material:
Body steel.
Ball rust and acid resistant steel.
Form M with carbide insert.

Version:
Body black oxidised.
Ball bright.

Sample order:
nlm 02001-108

Note:
Self-aligning pads are used to support and clamp unmachined and machined workpieces. They also serve as stops, supports and thrust pads in fixture and toolmaking.
Grub screws or threaded studs can be screwed and glued into thread D3 making a self-aligning pad with external thread.

Ball secured against rotation.

Advantages:
- Self-aligning pads can be swiveled.
- High load forces can be absorbed.
- The built-in o-ring keeps dirt and foreign particles out, which in turn guarantees reliable operation.

Drawing reference:
Form C: flattened ball, smooth
Form M: flattened ball, with carbide serrations

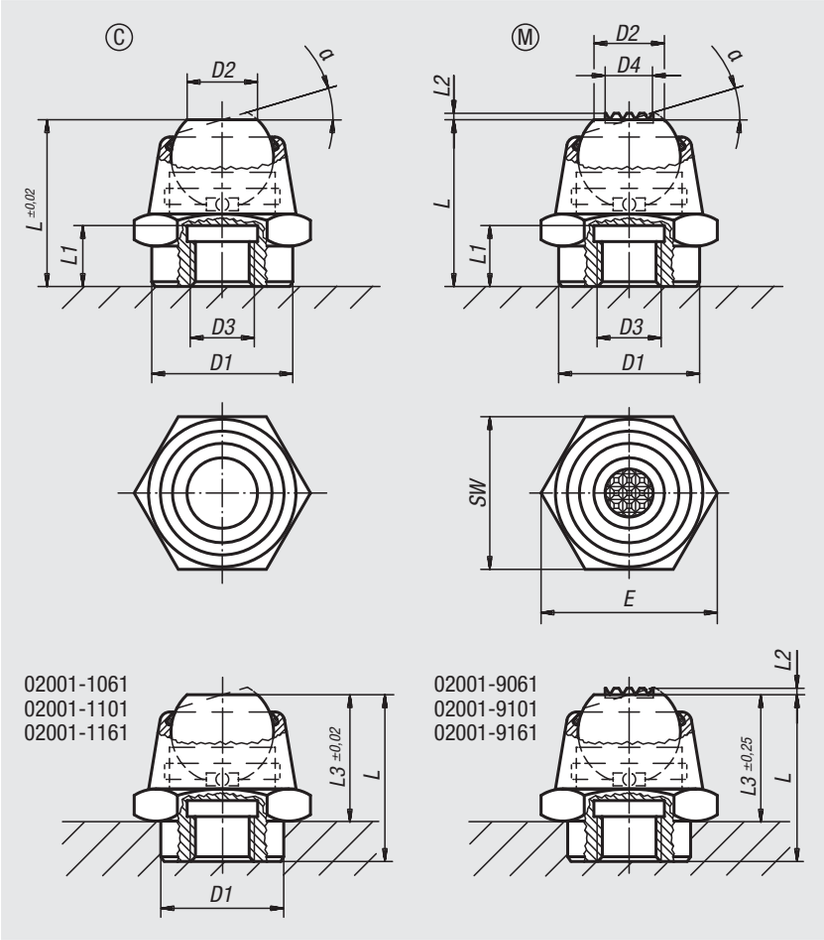

Self-aligning pads

swivel angle 14° and 20°

Form C, flattened ball, flat face

Order No.	Form	α	D1	D2	D3	L	L1	L3	E	SW	Ball-Ø	Load rating max. kN (static load only)
02001-1061	C	14°	12	7	M6	17,5	6	12,5	19,6	17	10	14
02001-106	C	14°	16	7	M6	17,5	6	-	19,6	17	10	14
02001-108	C	20°	22	11	M8	26	9	-	27,7	24	16	34
02001-1101	C	20°	18	11	M10	26	9	20	27,7	24	16	34
02001-110	C	20°	22	11	M10	26	9	-	27,7	24	16	34
02001-112	C	20°	22	11	M12	26	9	-	27,7	24	16	34
02001-1161	C	20°	26	18	M16	40	15	30	41,6	36	25	90
02001-116	C	20°	34	18	M16	40	15	-	41,6	36	25	90
02001-120	C	20°	34	18	M20	40	15	-	41,6	36	25	90

Form M, flattened ball, carbide steel diamond grip

Order No.	Form	α	D1	D2	D3	D4	L	L1	L2	L3	E	SW	Ball-Ø	Load rating max. kN (static load only)
02001-9061	M	14°	12	7	M6	5	17,5	6	0,6	12,5	19,6	17	10	14
02001-906	M	14°	16	7	M6	5	17,5	6	0,6	-	19,6	17	10	14
02001-908	M	20°	22	11	M8	7,5	26	9	0,8	-	27,7	24	16	34
02001-9101	M	20°	18	11	M10	7,5	26	9	0,8	20	27,7	24	16	34
02001-910	M	20°	22	11	M10	7,5	26	9	0,8	-	27,7	24	16	34
02001-912	M	20°	22	11	M12	7,5	26	9	0,8	-	27,7	24	16	34
02001-9161	M	20°	26	18	M16	13	40	15	0,9	30	41,6	36	25	90
02001-916	M	20°	34	18	M16	13	40	15	0,9	-	41,6	36	25	90
02001-920	M	20°	34	18	M20	13	40	15	0,9	-	41,6	36	25	90

Self-aligning pads

with O-ring

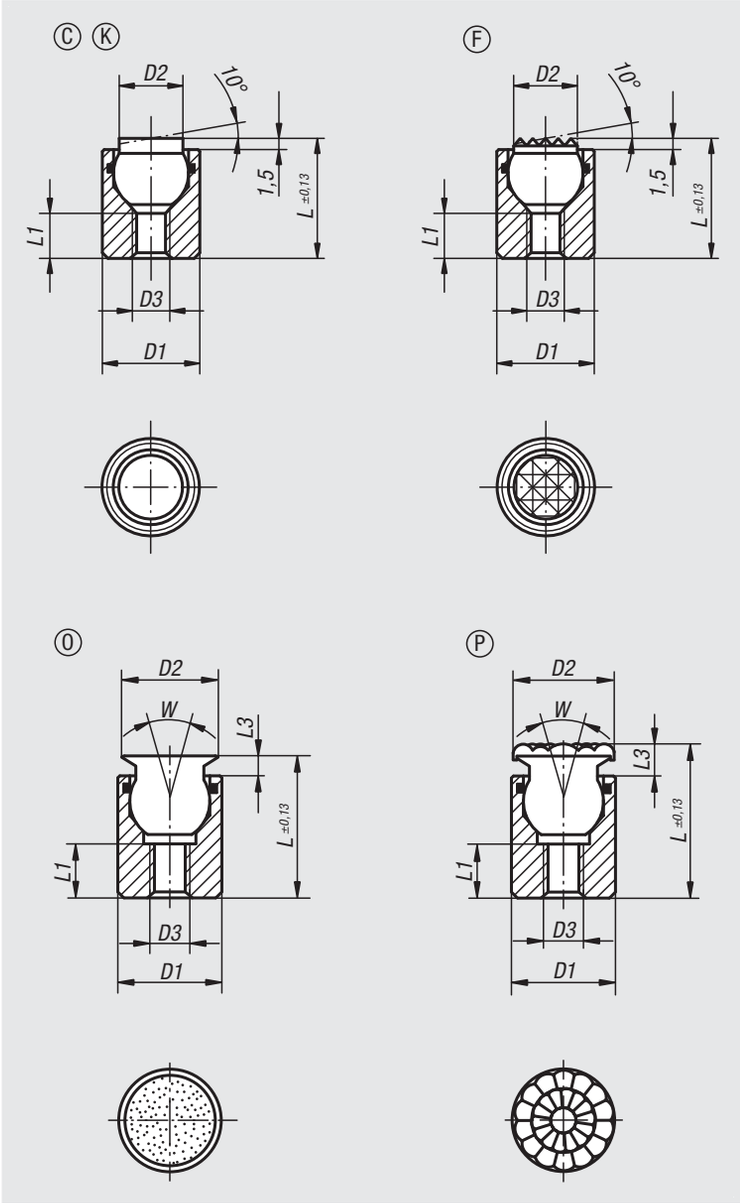

Material:
Body carbon steel.
Ball:
Form C, F tool steel.
Form K POM.
Form O stainless steel diamond impregnated.
Form P stainless steel with polyurethane face.

Version:
Body tempered, black oxidised.
Ball:
Form C, F hardened, black oxidised.
Form K POM ball, white.
Form O surface comparable to 100 grade abrasive grit.
Form P polyurethane, hardness 60 Shore.

Sample order:
nlm 02002-704X012

Note:
Self-aligning pads are used to support and clamp unmachined and machined workpieces.
They also serve as stops, supports and thrust pads in fixtures and toolmaking.

Ball secured against rotation.

Form O: The abrasive diamond surface is fused firmly to the ball. It is ideally suited to supporting smooth or slippery applications with a minimum of clamping pressure. This allows the diamond particles to get a firm grip on a very small area with minimum damage to the surface. The diamond surface offers excellent wear resistance.

Form P: The polyurethane surface is permanently vulcanised on the ball. It is abrasion-resistant and does not discolour. Offers optimum protection against damage to delicate surfaces. The pearl-like surface gives a firm grip and allows air to escape so as to prevent any suction effect between the contact surface and the self-aligning pads.

Advantages:
The built-in O-ring holds the ball in place and keeps dirt and foreign particles out ensuring smooth and even movement.

Drawing reference:
Form C: flattened steel ball, smooth
Form F: flattened steel ball, with serrations
Form K: POM ball, flattened, smooth
Form O: stainless steel ball diamond impregnated
Form P: stainless steel ball with polyurethane surface

Self-aligning pads

with O-ring

Order No.	Form	D1	D2	D3	L	L1	Ball-Ø	Load rating max. kN (static load only)
02002-104X012	C	10	6	M4	12	4,5	7	12
02002-104X025	C	10	6	M4	25	12	7	12
02002-105X016	C	13	8,5	M5	16	5	10	20
02002-105X025	C	13	8,5	M5	25	12	10	20

Order No.	Form	D1	D2	D3	L	L1	Ball-Ø	Load rating max. kN (static load only)
02002-304X012	F	10	6	M4	12	4,5	7	12
02002-304X025	F	10	6	M4	25	12	7	12
02002-305X016	F	13	8,5	M5	16	5	10	20
02002-305X025	F	13	8,5	M5	25	12	10	20

Order No.	Form	D1	D2	D3	L	L1	Ball-Ø	Load rating max. kN (static load only)
02002-704X012	K	10	6	M4	12	4,5	7	2
02002-704X025	K	10	6	M4	25	12	7	2
02002-705X016	K	13	8,5	M5	16	5	10	4
02002-705X025	K	13	8,5	M5	25	12	10	4

Order No.	Form	D1	D2	D3	L	L1	L3	W	Ball-Ø	Load rating max. kN (static load only)
02002-504X012	O	10	8	M4	12,5	3,5	2	28	7	11,5
02002-504X025	O	10	8	M4	25,5	9	2	28	7	11,5
02002-505X017	O	13	11	M5	17,5	6,5	3	28	10	19,8
02002-505X026	O	13	11	M5	26,5	9	3	28	10	19,8
02002-506X021	O	17	14	M6	21	7,5	3	28	13	27,4
02002-508X024	O	19	19	M8	24	8,5	4	24	15	38,6
02002-510X028	O	24	21	M10	28	9	4	24	20	58,3

Order No.	Form	D1	D2	D3	L	L1	L3	W	Ball-Ø
02002-604X014	P	10	10	M4	14,5	3,5	4	28	7
02002-604X027	P	10	10	M4	27,5	9	4	28	7
02002-605X019	P	13	13	M5	19,5	6,5	5	28	10
02002-605X028	P	13	13	M5	28,5	9	5	28	10
02002-606X023	P	17	16	M6	23	7,5	5	28	13
02002-608X026	P	19	21	M8	26	8,5	6	24	15
02002-610X030	P	24	23	M10	30	9	6	24	20

Self-aligning pads

with O-ring and exchangeable inserts

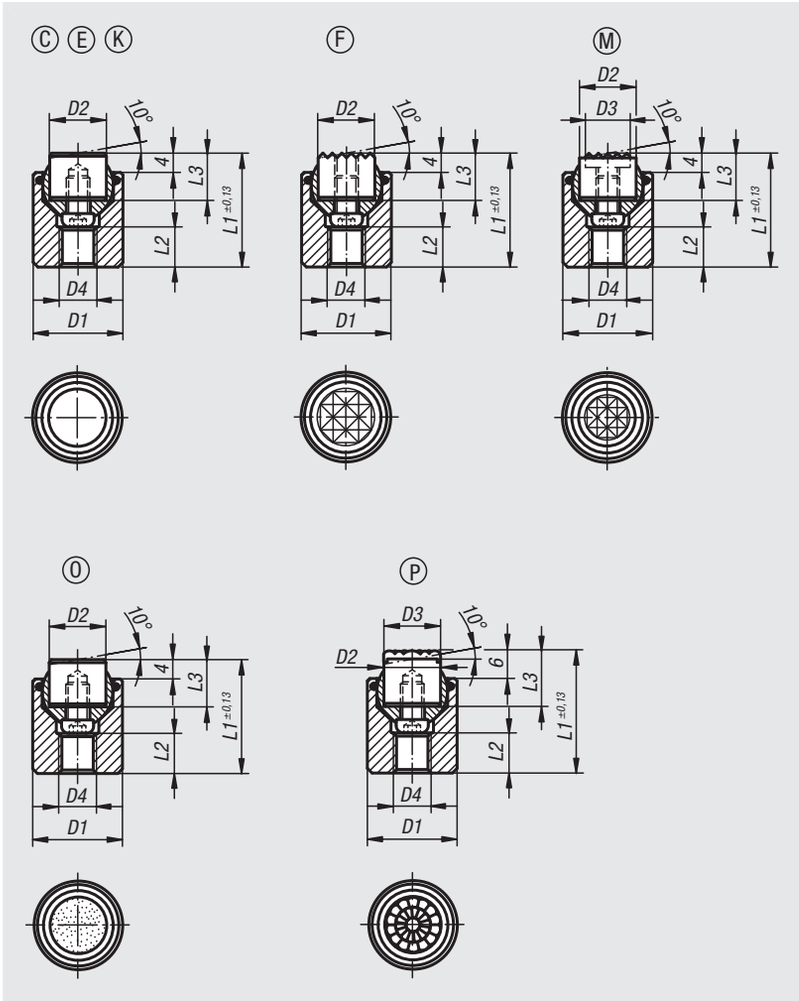

Material:
Body carbon steel.
Ball rust and acid resistant steel.
Inserts:
Form C, F, M tool steel
Form K POM
Form E stainless steel.
Form O stainless steel diamond impregnated.
Form P stainless steel with polyurethane surface.

Version:
Body tempered, black oxidised.
Ball hardened, bright.
Inserts:
Form C, F hardened, black oxidised.
Form M with carbide serrations, black oxidised.
Form K white.
Form E hardened, bright.
Form O diamond impregnated surface comparable to 100 grade abrasive grit.
Form P polyurethane surface, hardness 60 Shore.

Sample order:
nlm 02003-736X036

Note:
Self-aligning pads are used to support and clamp unmachined and machined workpieces.
In addition, they serve as stops, supports and thrust pads in fixtures and toolmaking.
The ball can be removed from the housing by applying light pressure to the socket head screw.

Ball secured against rotation.

Advantages:
Highly cost-effective as inserts can be exchanged.
The built-in O-ring holds the ball in place and keeps dirt and foreign particles out, ensuring uniform movement.

Drawing reference:
Form C: flattened steel insert, smooth
Form E: flattened stainless steel insert, smooth
Form F: gripper face
Form K: flattened POM insert, smooth
Form M: gripper face, with carbide serrations
Form O: stainless steel insert diamond impregnated
Form P: stainless steel insert with polyurethane surface

Order No.	Form	D1	D2	D4	L1	L2	L3	Ball-Ø	Load rating max. kN (static load only)	Order No. steel insert
02003-117X022	C	17	10	M6	22	7	10	13	28	07113-10108
02003-119X024	C	19	12	M8	24	8	10	15	39	07113-12108
02003-124X028	C	24	16	M10	28	8	10	20	58	07113-16108
02003-130X030	C	30	20	M12	30	9	10	23	95	07113-20108
02003-136X036	C	36	25	M12	36	11	10	28	136	07113-25108

Self-aligning pads

with O-ring and exchangeable inserts

Order No.	Form	D1	D2	D4	L1	L2	L3	Ball-Ø	Load rating max. kN (static load only)	Order No. stainless steel insert
02003-217X022	E	17	10	M6	22	7	10	13	28	07113-10102
02003-219X024	E	19	12	M8	24	8	10	15	39	07113-12102
02003-224X028	E	24	16	M10	28	8	10	20	58	07113-16102
02003-230X030	E	30	20	M12	30	9	10	23	95	07113-20102
02003-236X036	E	36	25	M12	36	11	10	28	136	07113-25102

Order No.	Form	D1	D2	D4	L1	L2	L3	Ball-Ø	Load rating max. kN (static load only)	Order No. gripper
02003-317X022	F	17	10	M6	22	7	10	13	28	07113-1010
02003-319X024	F	19	12	M8	24	8	10	15	39	07113-1210
02003-324X028	F	24	16	M10	28	8	10	20	58	07113-1610
02003-330X030	F	30	20	M12	30	9	10	23	95	07113-2010
02003-336X036	F	36	25	M12	36	11	10	28	136	07113-2510

Order No.	Form	D1	D2	D4	L1	L2	L3	Ball-Ø	Load rating max. kN (static load only)	Order No. POM insert
02003-717X022	K	17	10	M6	22	7	10	13	4	07113-10109
02003-719X024	K	19	12	M8	24	8	10	15	7	07113-12109
02003-724X028	K	24	16	M10	28	8	10	20	14	07113-16109
02003-730X030	K	30	20	M12	30	9	10	23	27	07113-20109
02003-736X036	K	36	25	M12	36	11	10	28	47	07113-25109

Order No.	Form	D1	D2	D3	D4	L1	L2	L3	Ball-Ø	Load rating max. kN (static load only)	Order No. gripper
02003-917X022	M	17	10	7,9	M6	22	7	10	13	28	07113-10107
02003-919X024	M	19	12	9,5	M8	24	8	10	15	39	07113-12107
02003-924X028	M	24	16	12,7	M10	28	8	10	20	58	07113-16107
02003-930X030	M	30	20	15,9	M12	30	9	10	23	95	07113-20107
02003-936X036	M	36	25	19	M12	36	11	10	28	136	07113-25107

Order No.	Form	D1	D2	D4	L1	L2	L3	Ball-Ø	Load rating max. kN (static load only)	Order No. stainless steel insert, diamond surface
02003-517X022	O	17	10	M6	22	7	10	13	28	07113-10105
02003-519X024	O	19	12	M8	24	8	10	15	39	07113-12105
02003-524X028	O	24	16	M10	28	8	10	20	58	07113-16105
02003-530X030	O	30	20	M12	30	9	10	23	95	07113-20105
02003-536X036	O	36	25	M12	36	11	10	28	136	07113-25105

Order No.	Form	D1	D2	D3	D4	L1	L2	L3	Ball-Ø	Order No. stainless steel insert, polyurethane surface
02003-617X024	P	17	10	10	M6	24	7	12	13	07113-10126
02003-619X026	P	19	12	13	M8	26	8	12	15	07113-12126
02003-624X030	P	24	16	16	M10	30	8	12	20	07113-16126
02003-630X032	P	30	20	21	M12	32	9	12	23	07113-20126
02003-636X038	P	36	25	27	M12	38	11	12	28	07113-25126

Self-aligning pads

self-righting

Material:
Carbon steel.

Version:
Hardened, black oxidised.

Sample order:
nlm 02004-105

Note:
Self-aligning pads are used to support and clamp unmachined and machined workpieces.
They also serve as stops, supports and thrust pads in fixtures and toolmaking.

Advantages:
– The built-in O-ring prevents dirt and foreign particles from entering.
– The clamping surface swivels back automatically after clamping.
– High load rating and small size.

Drawing reference:
Form C: smooth face
Form F: serrated face

1) Hole for pin as a rotation lock

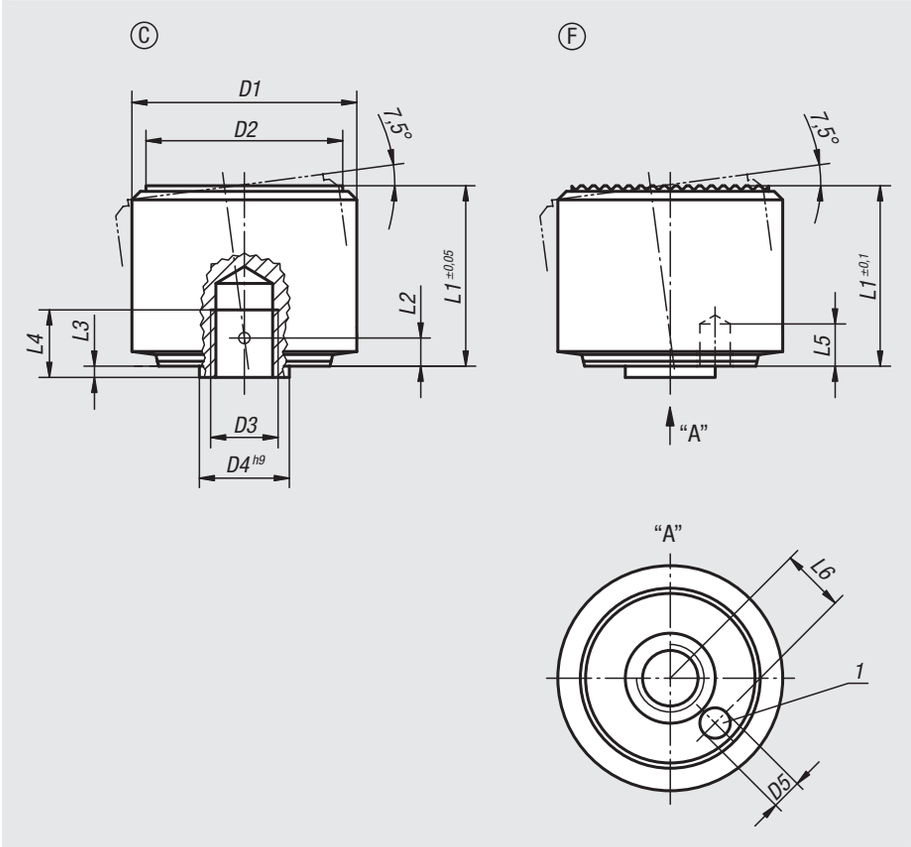

1. bring gripper into position

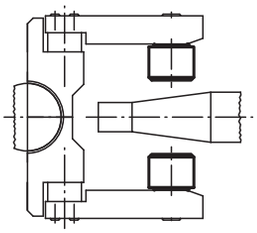

zero-point position of self-aligning pads

2. grip workpiece

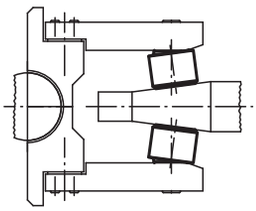

self-aligning pads adapt to workpiece contour

3. open gripper

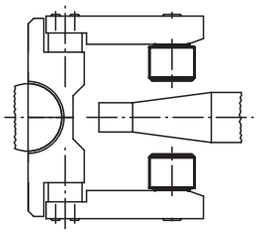

self-aligning pads swivel back automatically

Order No.	Form	D1	D2	D3	D4	D5	L1	L2	L3	L4	L5	L6	Load rating max. kN (static load only)
02004-105	C	18	15	M5	7	1,8	14	2,1	0,8	5	3	4,6	30
02004-106	C	22	18	M6	8	2,8	16,5	2,5	1	6	4	5,6	50
02004-108	C	28	23	M8	11	3,3	21,5	3,4	1,3	8	5	7,5	90
02004-110	C	34	29	M10	13	4,4	27	4,2	1,6	10	6	9,2	140
02004-112	C	40	35	M12	16	5,4	32	5	2	12	8	11,3	220

Order No.	Form	D1	D2	D3	D4	D5	L1	L2	L3	L4	L5	L6	Load rating max. kN (static load only)
02004-305	F	18	15	M5	7	1,8	14	2,1	0,8	5	3	4,6	30
02004-306	F	22	18	M6	8	2,8	16,5	2,5	1	6	4	5,6	50
02004-308	F	28	23	M8	11	3,3	21,5	3,4	1,3	8	5	7,5	90
02004-310	F	34	29	M10	13	4,4	27	4,2	1,6	10	6	9,2	140
02004-312	F	40	35	M12	16	5,4	32	5	2	12	8	11,3	220

Self-aligning pads

adjustable

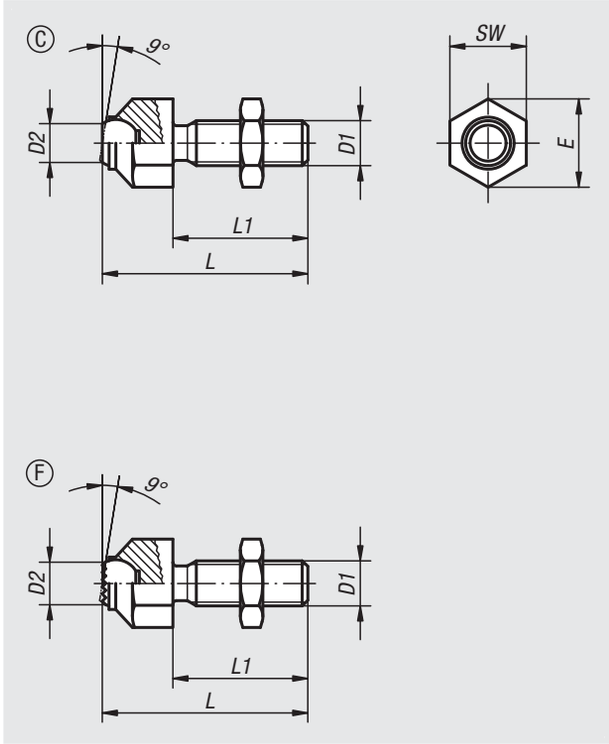

Material:
Steel or stainless steel

Version:
Steel version:
Housing tempered and manganese phosphated.
Nut black oxidised. .

Stainless steel version:
Housing tempered and electropolished.
Nut bright.

Sample order:
nlm 02005-316

Note:
Ball secured against rotation.

Drawing reference:
Form C: flattened ball, smooth
Form M: flattened ball, with serrations

Order No.	Main material	Form	D1	D2	L	L1	E	SW	Ball-Ø	Load rating max. kN (static load only)
02005-108	steel	C	M8	5,8	36,6	25	14,5	13	8,5	8
02005-110	steel	C	M10	8,6	45,7	30	19	17	12	8
02005-112	steel	C	M12	8,6	50,7	35	19	17	12	15
02005-116	steel	C	M16	10,5	60,7	40	27	24	16	25
02005-120	steel	C	M20	20	77,3	50	33	30	25	90
02005-1081	stainless steel	C	M8	5,8	36,6	25	14,5	13	8,5	8
02005-1101	stainless steel	C	M10	8,6	45,7	30	19	17	12	8
02005-1121	stainless steel	C	M12	8,6	50,7	35	19	17	12	15
02005-1161	stainless steel	C	M16	10,5	60,7	40	27	24	16	25
02005-1201	stainless steel	C	M20	20	77,3	50	33	30	25	90

Order No.	Main material	Form	D1	D2	L	L1	E	SW	Ball-Ø	Load rating max. kN (static load only)
02005-308	steel	F	M8	5,8	36,6	25	14,5	13	8,5	8
02005-310	steel	F	M10	8,6	45,7	30	19	17	12	8
02005-312	steel	F	M12	8,6	50,7	35	19	17	12	15
02005-316	steel	F	M16	10,5	60,7	40	27	24	16	25
02005-320	steel	F	M20	20	77,3	50	33	30	25	90
02005-3081	stainless steel	F	M8	5,8	36,6	25	14,5	13	8,5	8
02005-3101	stainless steel	F	M10	8,6	45,7	30	19	17	12	8
02005-3121	stainless steel	F	M12	8,6	50,7	35	19	17	12	15
02005-3161	stainless steel	F	M16	10,5	60,7	40	27	24	16	25
02005-3201	stainless steel	F	M20	20	77,3	50	33	30	25	90

Self-aligning pads

adjustable with O-ring

Material:
Body carbon steel.
Ball:
Form C, F, tool steel.
Form K POM.
Form O stainless steel diamond impregnated.
Form P stainless steel with polyurethane surface.

Version:
Body tempered, black oxidised.
Ball:
Form C, F hardened, black oxidised.
Form K POM ball white.
Form O surface comparable to 100 grade abrasive grit.
Form P polyurethane hardness 60 Shore.

Sample order:
nlm 02006-106X040

Note:
Self-aligning pads are used to support and clamp unmachined and machined workpieces.
They also serve as stops, supports and thrust pads in fixtures and toolmaking.

Ball secured against rotation.

Form O: The abrasive diamond surface is bonded firmly to the ball. It is ideally suited to supporting smooth or slippery applications with a minimum of clamping pressure. This allows the diamond particles to get a firm grip on a very small area with minimum damage to the surface.
The diamond surface offers excellent wear resistance.

Form P: The polyurethane surface is vulcanised firmly to the ball. It is abrasion-resistant and does not discolour.
It offers optimum protection against damage to delicate surfaces. The pearl-like surface gives a firm grip and allows air to escape so as to prevent any suction effect between the contact surface and the self-aligning pads.

Advantages:
The built-in O-ring holds the ball in place and keeps dirt and foreign particles out, ensuring uniform movement.

Drawing reference:
Form C: flattened steel ball, smooth
Form F: flattened steel ball, with serrations
Form K: POM ball, flattened, smooth
Form O: stainless steel ball diamond impregnated
Form P: stainless steel ball with polyurethane surface

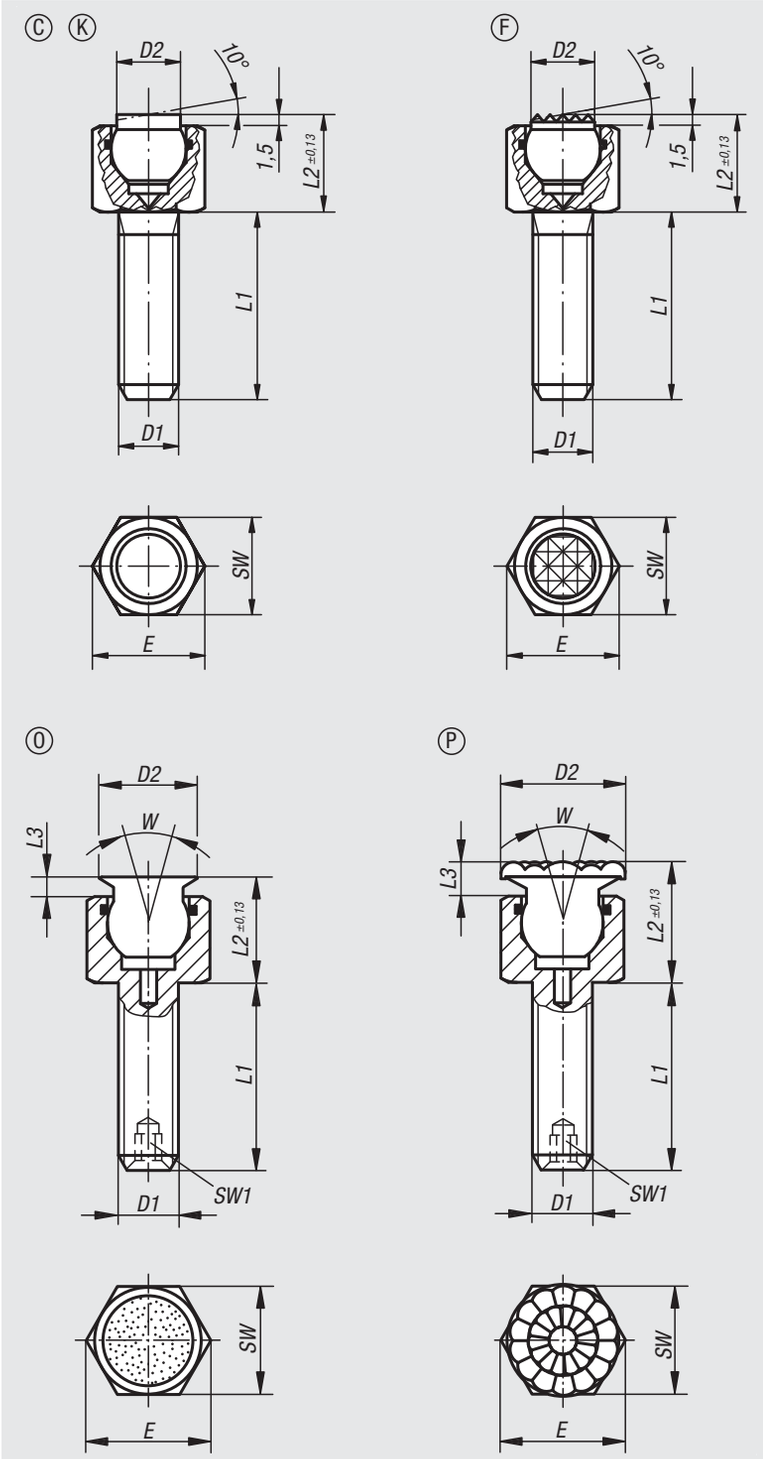

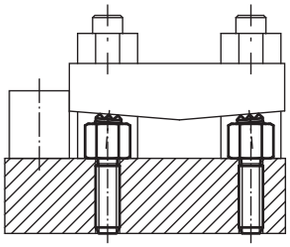

Self-aligning pads

adjustable with O-ring

Order No.	Form	D1	D2	L1	L2	E	SW	Ball-Ø	Load rating max. kN (static load only)
02006-106X012	C	M6	6	12	9,5	11,5	10	7	9
02006-106X025	C	M6	6	25	9,5	11,5	10	7	9
02006-106X040	C	M6	6	40	9,5	11,5	10	7	9
02006-108X012	C	M8	8,5	12	13	15	13	10	15
02006-108X025	C	M8	8,5	25	13	15	13	10	15
02006-108X040	C	M8	8,5	40	13	15	13	10	15

Order No.	Form	D1	D2	L1	L2	E	SW	Ball-Ø	Load rating max. kN (static load only)
02006-306X012	F	M6	6	12	9,5	11,5	10	7	9
02006-306X025	F	M6	6	25	9,5	11,5	10	7	9
02006-306X040	F	M6	6	40	9,5	11,5	10	7	9
02006-308X012	F	M8	8,5	12	13	15	13	10	15
02006-308X025	F	M8	8,5	25	13	15	13	10	15
02006-308X040	F	M8	8,5	40	13	15	13	10	15

Order No.	Form	D1	D2	L1	L2	E	SW	Ball-Ø	Load rating max. kN (static load only)
02006-706X012	K	M6	6	12	9,5	11,5	10	7	2
02006-706X025	K	M6	6	25	9,5	11,5	10	7	2
02006-706X040	K	M6	6	40	9,5	11,5	10	7	2
02006-708X012	K	M8	8,5	12	13	15	13	10	4
02006-708X025	K	M8	8,5	25	13	15	13	10	4
02006-708X040	K	M8	8,5	40	13	15	13	10	4

Order No.	Form	D1	D2	L1	L2	L3	E	SW	SW1	W	Ball-Ø	Load rating max. kN (static load only)
02006-506X	O	M6	8	12/25/40	10	2	11,5	10	-	28	7	9,2
02006-508X	O	M8	11	12/25/40	14,5	3	15	13	-	28	10	15,5
02006-510X	O	M10	14	15/30/50	16	3	19,6	17	3	28	13	18,8
02006-512X	O	M12	19	20/40/60	19	4	21,9	19	5	24	15	29,8
02006-516X	O	M16	21	25/50/80	23	4	27,7	24	6	24	20	50,3

Order No.	Form	D1	D2	L1	L2	L3	E	SW	SW1	W	Ball-Ø
02006-606X	P	M6	10	12/25/40	12	4	11,5	10	-	28	7
02006-608X	P	M8	13	12/25/40	16,5	5	15	13	-	28	10
02006-610X	P	M10	16	15/30/50	18	5	19,6	17	3	28	13
02006-612X	P	M12	21	20/40/60	21	6	21,9	19	5	24	15
02006-616X	P	M16	23	25/50/80	25	6	27,7	24	6	24	20

Self-aligning pads

adjustable with O-ring and exchangeable inserts

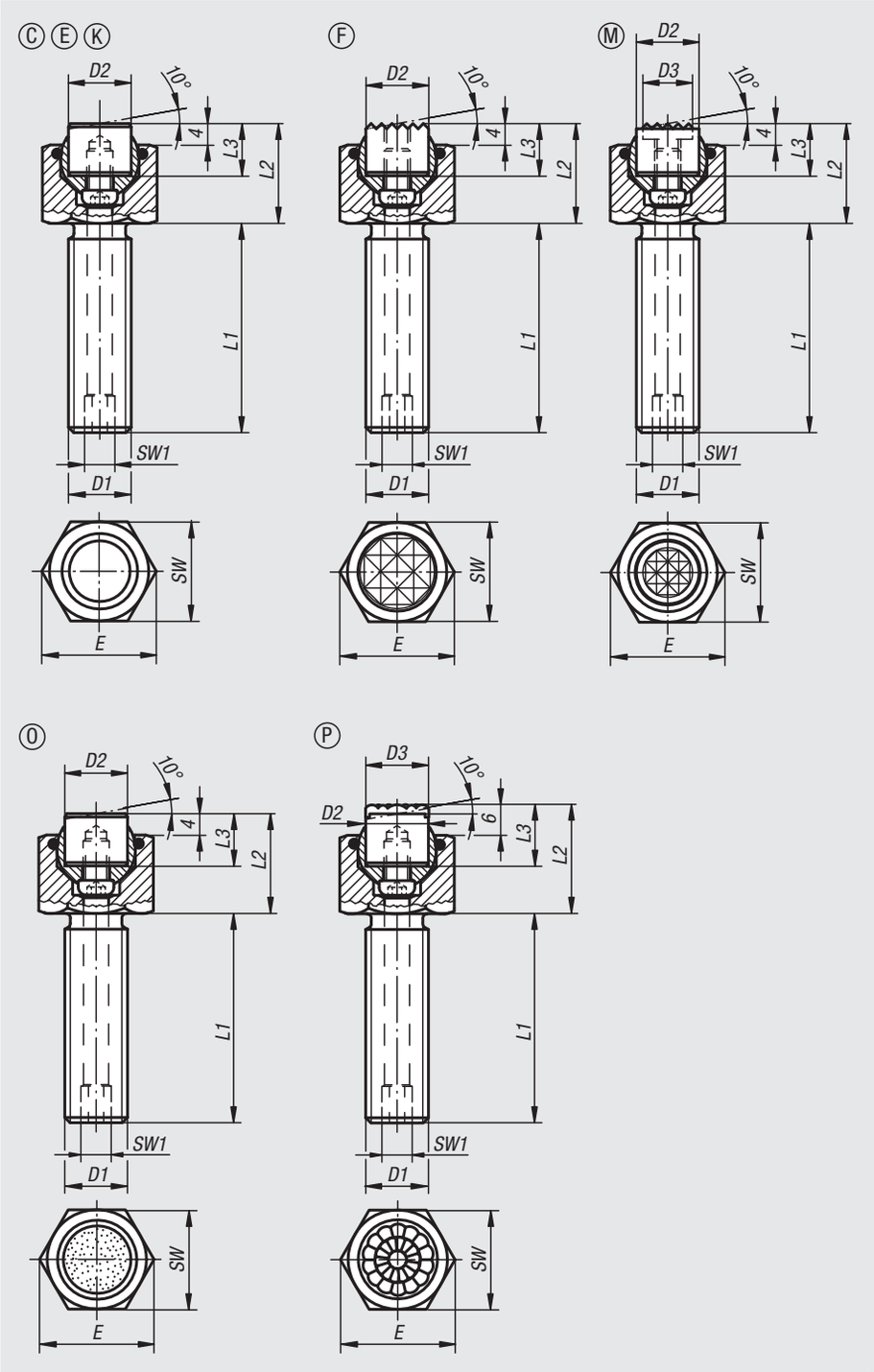

Material:
Body carbon steel.
Ball rust and acid resistant steel.
Inserts:
Form C, F, M tool steel
Form K POM
Form E stainless steel.
Form O stainless steel diamond impregnated.
Form P stainless steel with polyurethane surface.

Version:
Body tempered, black oxidised.
Ball hardened, bright.
Inserts:
Form C, F hardened, black oxidised.
Form M with carbide serrations, black oxidised.
Form K white.
Form E hardened, bright.
Form O diamond impregnated surface comparable to 100 grade abrasive grit.
Form P polyurethane surface, hardness 60 Shore.

Sample order:
nlm 02007-124X100

Note:
Self-aligning pads are used to support and clamp unmachined and machined workpieces.
They also serve as stops, supports and thrust pads in fixtures and toolmaking.
The ball can be removed from the housing by applying light pressure to the socket head screw.

Ball secured against rotation.

Advantages:
Highly cost-effective as inserts can be exchanged.
The built-in O-ring holds the ball in place and keeps dirt and foreign particles out, ensuring uniform movement.

Drawing reference:
Form C: flattened steel insert, smooth
Form E: flattened stainless steel insert, smooth
Form F: gripper face
Form K: flattened POM insert, smooth
Form M: gripper, with carbide serrations
Form O: stainless steel insert diamond impregnated
Form P: stainless steel insert with polyurethane surface

Self-aligning pads

adjustable with O-ring and exchangeable inserts

Order No.	Form	D1	D2	L1	L2	L3	E	SW	SW1	Ball-Ø	Load rating max. kN (static load only)	Order No. steel insert
02007-110X015	C	M10	10	15	17	10	19,6	17	3	13	19	07113-10108
02007-110X030	C	M10	10	30	17	10	19,6	17	3	13	19	07113-10108
02007-110X050	C	M10	10	50	17	10	19,6	17	3	13	19	07113-10108
02007-112X020	C	M12	12	20	19	10	21,9	19	5	15	30	07113-12108
02007-112X040	C	M12	12	40	19	10	21,9	19	5	15	30	07113-12108
02007-112X060	C	M12	12	60	19	10	21,9	19	5	15	30	07113-12108
02007-116X025	C	M16	16	25	23	10	27,7	24	6	20	50	07113-16108
02007-116X050	C	M16	16	50	23	10	27,7	24	6	20	50	07113-16108
02007-116X080	C	M16	16	80	23	10	27,7	24	6	20	50	07113-16108
02007-120X030	C	M20	20	30	24	10	34,6	30	8	23	85	07113-20108
02007-120X060	C	M20	20	60	24	10	34,6	30	8	23	85	07113-20108
02007-120X100	C	M20	20	100	24	10	34,6	30	8	23	85	07113-20108
02007-124X040	C	M24	25	40	30	10	41,6	36	10	28	121	07113-25108
02007-124X100	C	M24	25	100	30	10	41,6	36	10	28	121	07113-25108

Order No.	Form	D1	D2	L1	L2	L3	E	SW	SW1	Ball-Ø	Load rating max. kN (static load only)	Order No. stainless steel insert
02007-210X015	E	M10	10	15	17	10	19,6	17	3	13	19	07113-10102
02007-210X030	E	M10	10	30	17	10	19,6	17	3	13	19	07113-10102
02007-210X050	E	M10	10	50	17	10	19,6	17	3	13	19	07113-10102
02007-212X020	E	M12	12	20	19	10	21,9	19	5	15	30	07113-12102
02007-212X040	E	M12	12	40	19	10	21,9	19	5	15	30	07113-12102
02007-212X060	E	M12	12	60	19	10	21,9	19	5	15	30	07113-12102
02007-216X025	E	M16	16	25	23	10	27,7	24	6	20	50	07113-16102
02007-216X050	E	M16	16	50	23	10	27,7	24	6	20	50	07113-16102
02007-216X080	E	M16	16	80	23	10	27,7	24	6	20	50	07113-16102
02007-220X030	E	M20	20	30	24	10	34,6	30	8	23	85	07113-20102
02007-220X060	E	M20	20	60	24	10	34,6	30	8	23	85	07113-20102
02007-220X100	E	M20	20	100	24	10	34,6	30	8	23	85	07113-20102
02007-224X040	E	M24	25	40	30	10	41,6	36	10	28	121	07113-25102
02007-224X100	E	M24	25	100	30	10	41,6	36	10	28	121	07113-25102

Order No.	Form	D1	D2	L1	L2	L3	E	SW	SW1	Ball-Ø	Load rating max. kN (static load only)	Order No. gripper
02007-310X015	F	M10	10	15	17	10	19,6	17	3	13	19	07113-1010
02007-310X030	F	M10	10	30	17	10	19,6	17	3	13	19	07113-1010
02007-310X050	F	M10	10	50	17	10	19,6	17	3	13	19	07113-1010
02007-312X020	F	M12	12	20	19	10	21,9	19	5	15	30	07113-1210
02007-312X040	F	M12	12	40	19	10	21,9	19	5	15	30	07113-1210
02007-312X060	F	M12	12	60	19	10	21,9	19	5	15	30	07113-1210
02007-316X025	F	M16	16	25	23	10	27,7	24	6	20	50	07113-1610
02007-316X050	F	M16	16	50	23	10	27,7	24	6	20	50	07113-1610
02007-316X080	F	M16	16	80	23	10	27,7	24	6	20	50	07113-1610
02007-320X030	F	M20	20	30	24	10	34,6	30	8	23	85	07113-2010
02007-320X060	F	M20	20	60	24	10	34,6	30	8	23	85	07113-2010
02007-320X100	F	M20	20	100	24	10	34,6	30	8	23	85	07113-2010
02007-324X040	F	M24	25	40	30	10	41,6	36	10	28	121	07113-2510
02007-324X100	F	M24	25	100	30	10	41,6	36	10	28	121	07113-2510

Self-aligning pads

adjustable with O-ring and exchangeable inserts

Order No.	Form	D1	D2	L1	L2	L3	E	SW	SW1	Ball-Ø	Load rating max. kN (static load only)	Order No. POM insert
02007-710X015	K	M10	10	15	17	10	19,6	17	3	13	4	07113-10109
02007-710X030	K	M10	10	30	17	10	19,6	17	3	13	4	07113-10109
02007-710X050	K	M10	10	50	17	10	19,6	17	3	13	4	07113-10109
02007-712X020	K	M12	12	20	19	10	21,9	19	5	15	7	07113-12109
02007-712X040	K	M12	12	40	19	10	21,9	19	5	15	7	07113-12109
02007-712X060	K	M12	12	60	19	10	21,9	19	5	15	7	07113-12109
02007-716X025	K	M16	16	25	23	10	27,7	24	6	20	14	07113-16109
02007-716X050	K	M16	16	50	23	10	27,7	24	6	20	14	07113-16109
02007-716X080	K	M16	16	80	23	10	27,7	24	6	20	14	07113-16109
02007-720X030	K	M20	20	30	24	10	34,6	30	8	23	27	07113-20109
02007-720X060	K	M20	20	60	24	10	34,6	30	8	23	27	07113-20109
02007-720X100	K	M20	20	100	24	10	34,6	30	8	23	27	07113-20109
02007-724X040	K	M24	25	40	30	10	41,6	36	10	28	47	07113-25109
02007-724X100	K	M24	25	100	30	10	41,6	36	10	28	47	07113-25109

Order No.	Form	D1	D2	D3	L1	L2	L3	E	SW	SW1	Ball-Ø	Load rating max. kN (static load only)	Order No. gripper
02007-910X015	M	M10	10	7,9	15	17	10	19,6	17	3	13	19	07113-10107
02007-910X030	M	M10	10	7,9	30	17	10	19,6	17	3	13	19	07113-10107
02007-910X050	M	M10	10	7,9	50	17	10	19,6	17	3	13	19	07113-10107
02007-912X020	M	M12	12	9,5	20	19	10	21,9	19	5	15	30	07113-12107
02007-912X040	M	M12	12	9,5	40	19	10	21,9	19	5	15	30	07113-12107
02007-912X060	M	M12	12	9,5	60	19	10	21,9	19	5	15	30	07113-12107
02007-916X025	M	M16	16	12,7	25	23	10	27,7	24	6	20	50	07113-16107
02007-916X050	M	M16	16	12,7	50	23	10	27,7	24	6	20	50	07113-16107
02007-916X080	M	M16	16	12,7	80	23	10	27,7	24	6	20	50	07113-16107
02007-920X030	M	M20	20	15,9	30	24	10	34,6	30	8	23	85	07113-20107
02007-920X060	M	M20	20	15,9	60	24	10	34,6	30	8	23	85	07113-20107
02007-920X100	M	M20	20	15,9	100	24	10	34,6	30	8	23	85	07113-20107
02007-924X040	M	M24	25	19	40	30	10	41,6	36	10	28	121	07113-25107
02007-924X100	M	M24	25	19	100	30	10	41,6	36	10	28	121	07113-25107

Self-aligning pads

adjustable with O-ring and exchangeable inserts

Order No.	Form	D1	D2	L1	L2	L3	E	SW	SW1	Ball-Ø	Load rating max. kN (static load only)	Order No. stainless steel insert, diamond surface
02007-510X015	0	M10	10	15	17	10	19,6	17	3	13	19	07113-10105
02007-510X030	0	M10	10	30	17	10	19,6	17	3	13	19	07113-10105
02007-510X050	0	M10	10	50	17	10	19,6	17	3	13	19	07113-10105
02007-512X020	0	M12	12	20	19	10	21,9	19	5	15	30	07113-12105
02007-512X040	0	M12	12	40	19	10	21,9	19	5	15	30	07113-12105
02007-512X060	0	M12	12	60	19	10	21,9	19	5	15	30	07113-12105
02007-516X025	0	M16	16	25	23	10	27,7	24	6	20	50	07113-16105
02007-516X050	0	M16	16	50	23	10	27,7	24	6	20	50	07113-16105
02007-516X080	0	M16	16	80	23	10	27,7	24	6	20	50	07113-16105
02007-520X030	0	M20	20	30	24	10	34,6	30	8	23	85	07113-20105
02007-520X060	0	M20	20	60	24	10	34,6	30	8	23	85	07113-20105
02007-520X100	0	M20	20	100	24	10	34,6	30	8	23	85	07113-20105
02007-524X040	0	M24	25	40	30	10	41,6	36	10	28	121	07113-25105
02007-524X100	0	M24	25	100	30	10	41,6	36	10	28	121	07113-25105

Order No.	Form	D1	D2	D3	L1	L2	L3	E	SW	SW1	Ball-Ø	Order No. stainless steel insert, polyurethane surface
02007-620X030	P	M20	20	21	30	26	12	34,6	30	8	23	07113-20126
02007-612X020	P	M12	12	13	20	21	12	21,9	19	5	15	07113-12126
02007-610X015	P	M10	10	10	15	19	12	19,6	17	3	13	07113-10126
02007-624X100	P	M24	25	27	100	32	12	41,6	36	10	28	07113-25126
02007-616X025	P	M16	16	16	25	25	12	27,7	24	6	20	07113-16126
02007-616X050	P	M16	16	16	50	25	12	27,7	24	6	20	07113-16126
02007-612X060	P	M12	12	13	60	21	12	21,9	19	5	15	07113-12126
02007-610X030	P	M10	10	10	30	19	12	19,6	17	3	13	07113-10126
02007-620X100	P	M20	20	21	100	26	12	34,6	30	8	23	07113-20126
02007-624X040	P	M24	25	27	40	32	12	41,6	36	10	28	07113-25126
02007-610X050	P	M10	10	10	50	19	12	19,6	17	3	13	07113-10126
02007-616X080	P	M16	16	16	80	25	12	27,7	24	6	20	07113-16126
02007-620X060	P	M20	20	21	60	26	12	34,6	30	8	23	07113-20126
02007-612X040	P	M12	12	13	40	21	12	21,9	19	5	15	07113-12126

Self-aligning pads

adjustable with O-ring and hexagon socket

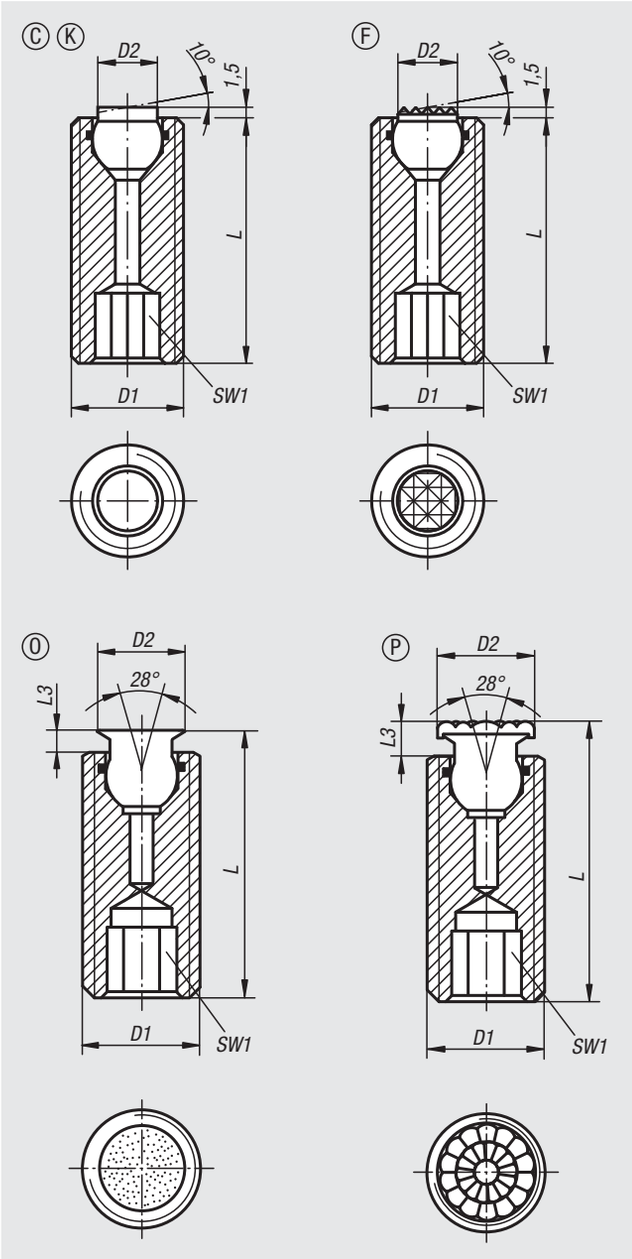

Material:
Body carbon steel.
Ball:
Form C, F, tool steel.
Form K POM.
Form O stainless steel diamond impregnated.
Form P stainless steel with polyurethane surface.

Version:
Body tempered, black oxidised.
Ball:
Form C, F hardened, black oxidised.
Form K POM ball white.
Form O surface comparable to 100 grade abrasive grit.
Form P polyurethane, hardness 60 Shore.

Sample order:
nlm 02008-112X050
(Include length L.)

Note:
Self-aligning pads are used to support and clamp unmachined and machined workpieces.
They also serve as stops, supports and thrust pads in fixtures and toolmaking.

Ball secured against rotation.

Form O: The abrasive diamond surface is bonded firmly to the ball. It is ideally suited to supporting smooth or slippery applications with a minimum of clamping pressure. This allows the diamond particles to get a firm grip on a very small area with minimum damage to the surface. The diamond surface offers excellent wear resistance.

Form P: The polyurethane surface is vulcanised firmly to the ball. It is abrasion-resistant and does not discolour. Offers optimum protection against damage to delicate surfaces. The pearl-like surface gives a firm grip and allows air to escape so as to prevent any suction effect between the contact surface and the toggle locator.

Advantages:
The built-in O-ring holds the ball in place and keeps dirt and foreign particles out, ensuring uniform movement.
The hexagon socket allows easy adjustment and positioning in through holes.

Drawing reference:
Form C: flattened steel ball, smooth
Form F: flattened steel ball, with serrations
Form K: POM ball, flattened, smooth
Form O: stainless steel ball diamond impregnated
Form P: stainless steel ball with polyurethane surface

Order No.	Form	D1	D2	L	SW1	Ball-Ø	Load rating max. kN (static load only)
02008-112X025	C	M12	6	25	6	7	15
02008-112X035	C	M12	6	35	6	7	15
02008-112X050	C	M12	6	50	6	7	15
02008-116X025	C	M16	8,5	25	8	10	23
02008-116X035	C	M16	8,5	35	8	10	23
02008-116X050	C	M16	8,5	50	8	10	23

Order No.	Form	D1	D2	L	SW1	Ball-Ø	Load rating max. kN (static load only)
02008-312X025	F	M12	6	25	6	7	15
02008-312X035	F	M12	6	35	6	7	15
02008-312X050	F	M12	6	50	6	7	15
02008-316X025	F	M16	8,5	25	8	10	23
02008-316X035	F	M16	8,5	35	8	10	23
02008-316X050	F	M16	8,5	50	8	10	23

Order No.	Form	D1	D2	L	SW1	Ball-Ø	Load rating max. kN (static load only)
02008-712X025	K	M12	6	25	6	7	2
02008-712X035	K	M12	6	35	6	7	2
02008-712X050	K	M12	6	50	6	7	2
02008-716X025	K	M16	8,5	25	8	10	4
02008-716X035	K	M16	8,5	35	8	10	4
02008-716X050	K	M16	8,5	50	8	10	4

Order No.	Form	D1	D2	L	L3	SW1	Ball-Ø	Load rating max. kN (static load only)
02008-510X026	O	M10	6	26,5	1,5	5	5	-
02008-510X036	O	M10	6	36,5	1,5	5	5	-
02008-510X051	O	M10	6	51,5	1,5	5	5	-
02008-512X027	O	M12	8	27	2	6	7	15,4
02008-512X037	O	M12	8	37	2	6	7	15,4
02008-512X052	O	M12	8	52	2	6	7	15,4
02008-516X028	O	M16	11	28	3	8	10	23,3
02008-516X038	O	M16	11	38	3	8	10	23,3
02008-516X053	O	M16	11	53	3	8	10	23,3
02008-520X033	O	M20	14	33	3	10	13	37,7
02008-520X053	O	M20	14	53	3	10	13	37,7
02008-520X073	O	M20	14	73	3	10	13	37,7

Order No.	Form	D1	D2	L	L3	SW1	Ball-Ø
02008-610X028	P	M10	8	28,5	3,5	5	5
02008-610X038	P	M10	8	38,5	3,5	5	5
02008-610X053	P	M10	8	53,5	3,5	5	5
02008-612X029	P	M12	10	29	4	6	7
02008-612X039	P	M12	10	39	4	6	7
02008-612X054	P	M12	10	54	4	6	7
02008-616X030	P	M16	13	30	5	8	10
02008-616X040	P	M16	13	40	5	8	10
02008-616X055	P	M16	13	55	5	8	10
02008-620X035	P	M20	16	35	5	10	13
02008-620X055	P	M20	16	55	5	10	13
02008-620X075	P	M20	16	75	5	10	13

Self-aligning pads

adjustable with O-ring, exchangeable inserts and hexagon socket

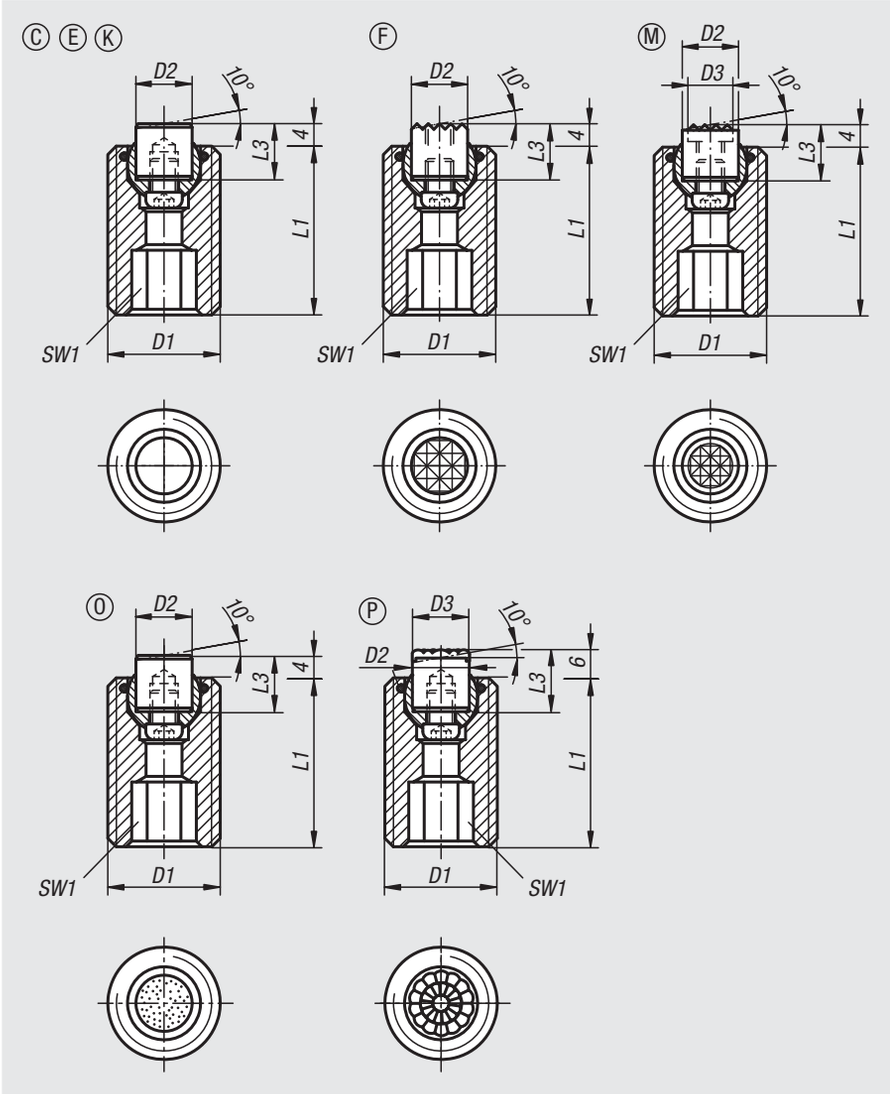

Material:
Body carbon steel.
Ball rust and acid resistant steel.
Inserts:
Form C, F, M tool steel
Form K POM
Form E stainless steel.
Form O stainless steel diamond impregnated.
Form P stainless steel with polyurethane surface.

Version:
Body tempered, black oxidised.
Ball hardened, bright.
Inserts:
Form C, F hardened, black oxidised.
Form M with carbide serrations, black oxidised.
Form K white.
Form E hardened, bright.
Form O diamond impregnated surface comparable to 100 grade abrasive grit.
Form P polyurethane surface, hardness 60 Shore.

Sample order:
nlm 02009-720X070

Note:
Self-aligning pads are used to support and clamp unmachined and machined workpieces.
They also serve as stops, supports and thrust pads in fixtures and toolmaking.
The ball can be removed from the housing by applying light pressure to the socket head screw.

Ball secured against rotation.

Advantages:
Highly cost-effective as inserts can be exchanged.
The built-in O-ring holds the ball in place and keeps dirt and foreign particles out, ensuring uniform movement.

Drawing reference:
Form C: flattened steel insert, smooth
Form E: flattened stainless steel insert, smooth
Form F: gripper face
Form K: flattened POM insert, smooth
Form M: gripper, with carbide serrations
Form O: stainless steel insert diamond impregnated
Form P: stainless steel insert with polyurethane surface

Order No.	Form	D1	D2	L1	L3	SW1	Ball-Ø	Load rating max. kN (static load only)	Order No. steel insert
02009-120X030	C	M20	10	30	10	10	13	37	07113-10108
02009-120X050	C	M20	10	50	10	10	13	37	07113-10108
02009-120X070	C	M20	10	70	10	10	13	37	07113-10108
02009-124X040	C	M24	12	40	10	10	15	55	07113-12108
02009-124X080	C	M24	12	80	10	10	15	55	07113-12108

Self-aligning pads

adjustable with O-ring, exchangeable inserts and hexagon socket

Order No.	Form	D1	D2	L1	L3	SW1	Ball-Ø	Load rating max. kN (static load only)	Order No. stainless steel insert
02009-220X030	E	M20	10	30	10	10	13	37	07113-10102
02009-220X050	E	M20	10	50	10	10	13	37	07113-10102
02009-220X070	E	M20	10	70	10	10	13	37	07113-10102
02009-224X040	E	M24	12	40	10	10	15	55	07113-12102
02009-224X080	E	M24	12	80	10	10	15	55	07113-12102

Order No.	Form	D1	D2	L1	L3	SW1	Ball-Ø	Load rating max. kN (static load only)	Order No. gripper
02009-320X030	F	M20	10	30	10	10	13	37	07113-1010
02009-320X050	F	M20	10	50	10	10	13	37	07113-1010
02009-320X070	F	M20	10	70	10	10	13	37	07113-1010
02009-324X040	F	M24	12	40	10	10	15	55	07113-1210
02009-324X080	F	M24	12	80	10	10	15	55	07113-1210

Order No.	Form	D1	D2	L1	L3	SW1	Ball-Ø	Load rating max. kN (static load only)	Order No. POM insert
02009-720X030	K	M20	10	30	10	10	13	4	07113-10109
02009-720X050	K	M20	10	50	10	10	13	4	07113-10109
02009-720X070	K	M20	10	70	10	10	13	4	07113-10109
02009-724X040	K	M24	12	40	10	10	15	7	07113-12109
02009-724X080	K	M24	12	80	10	10	15	7	07113-12109

Order No.	Form	D1	D2	D3	L1	L3	SW1	Ball-Ø	Load rating max. kN (static load only)	Order No. gripper
02009-920X030	M	M20	10	7,9	30	10	10	13	37	07113-10107
02009-920X050	M	M20	10	7,9	50	10	10	13	37	07113-10107
02009-920X070	M	M20	10	7,9	70	10	10	13	37	07113-10107
02009-924X040	M	M24	12	9,5	40	10	10	15	55	07113-12107
02009-924X080	M	M24	12	9,5	80	10	10	15	55	07113-12107

Order No.	Form	D1	D2	L1	L3	SW1	Ball-Ø	Load rating max. kN (static load only)	Order No. stainless steel insert, diamond surface
02009-520X030	O	M20	10	30	10	10	13	37	07113-10105
02009-520X050	O	M20	10	50	10	10	13	37	07113-10105
02009-520X070	O	M20	10	70	10	10	13	37	07113-10105
02009-524X040	O	M24	12	40	10	10	15	55	07113-12105
02009-524X080	O	M24	12	80	10	10	15	55	07113-12105

Order No.	Form	D1	D2	D3	L1	L3	SW1	Ball-Ø	Load rating max. kN (static load only)	Order No. stainless steel insert, polyurethane surface
02009-620X030	P	M20	10	10	30	12	10	13	37	07113-10126
02009-620X050	P	M20	10	10	50	12	10	13	37	07113-10126
02009-620X070	P	M20	10	10	70	12	10	13	37	07113-10126
02009-624X040	P	M24	12	13	40	12	10	15	55	07113-12126
02009-624X080	P	M24	12	13	80	12	10	15	55	07113-12126

Rest pads

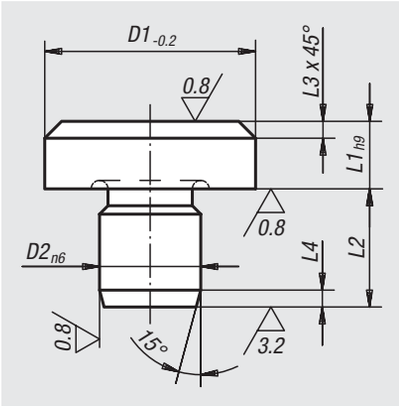

Material:
Tool steel.

Version:
Hardened and ground.
Top face without centerbore.

Sample order:
nlm 02010-041

Note:
If more than one rest pad is used, the support height can be reground. Rest pads can also be used as feet for jigs and fixtures.

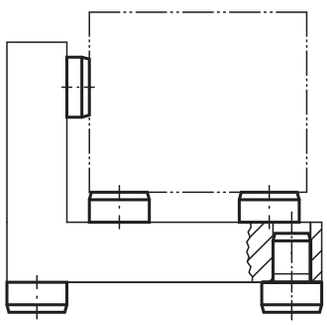

Order No.	D1	L1	D2	L2	L3	L4
02010-041	6	2,5	4	6,5	0,7	1,2
02010-042	6	4,5	4	8,5	0,7	1,2
02010-04	6	5	4	6	0,7	1,2
02010-061	10	4,5	6	8,5	0,9	1,5
02010-06	10	8	6	8,5	0,9	1,5
02010-08	16	5	8	10	2	2
02010-081	16	13	8	10	2	2
02010-10	20	6	10	12	2	2
02010-101	20	12	10	12	2	2
02010-12	25	8	12	14	2	2
02010-122	25	20	12	14	2	2
02010-123	25	30	12	14	2	2
02010-16	30	25	16	20	2,5	2,5
02010-164	30	40	16	20	2,5	2,5
02010-165	30	50	16	20	2,5	2,5
02010-166	30	65	16	20	2,5	2,5
02010-20	30	80	20	20	2,5	2,5
02010-201	30	100	20	20	2,5	2,5
02010-202	40	13	20	20	3,2	3,2
02010-203	40	32	20	20	3,2	3,2

Locating pins and rest pads

DIN 6321 (Issue 1973)

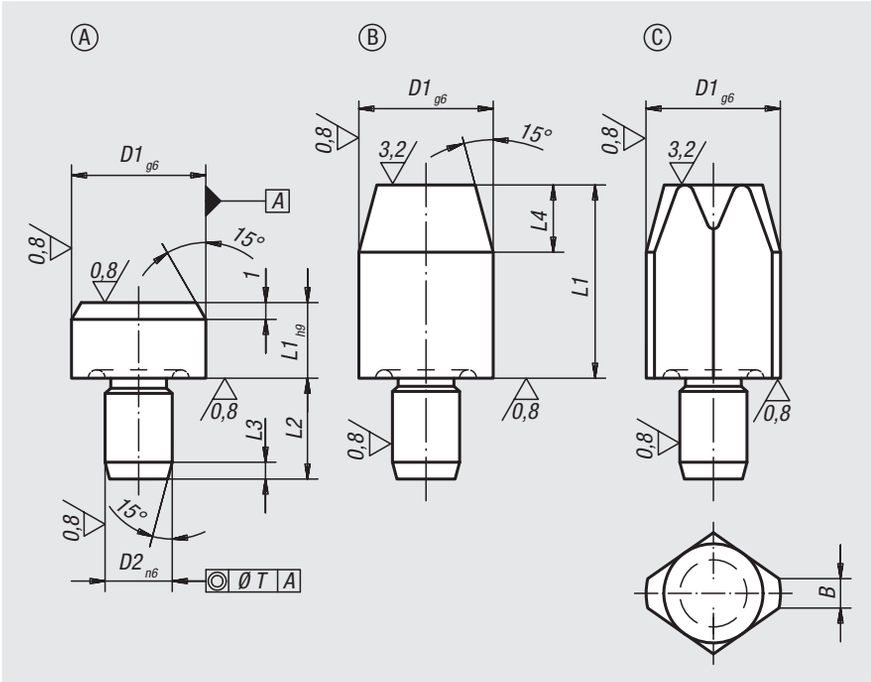

Material:
Tool steel.

Version:
Hardened and ground.

Sample order:
nlm 02020-212

Note:
Rest pads Form A are supports for workpieces and fixtures.
Locating pins Form B are for positioning workpieces and fixture components in reamed holes.
The flattened Form C can be used to bridge tolerances in hole spacing or to secure the part to be positioned in one direction only.
Form A and B can also be used as hardened stops and as fixture feet.
For similar pins see 03120, 03130, 03140 and 03150.

Drawing reference:
Form A: Rest pad
Form B: Cylindrical locating pin
Form C: Flattened locating pin

Other dimensions see Form A.

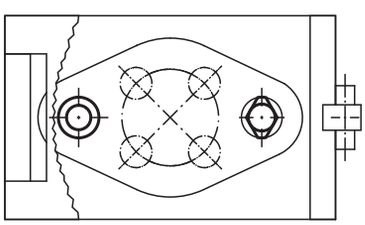

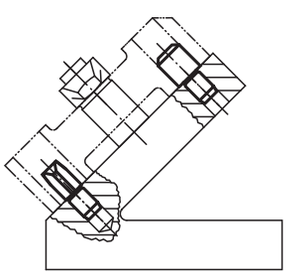

Rest pads, Form A

Order No. without centrebore	D1	L1	D2	L2	L3	T
02020-106	6	5	4	6	1,2	0,02
02020-110	10	6	6	9	1,6	0,02
02020-116	16	8	8	12	2	0,04
02020-125	25	10	12	18	2,5	0,04

Locating pin cylindrical, Form B

Order No. short	Order No. long	D1	L1	D2	L2	L3	L4	T
02020-206	**02020-306**	6	7/12	4	6	1,2	4	0,02
02020-208	**02020-308**	8	10/16	6	9	1,6	6	0,02
02020-210	**02020-310**	10	10/18	6	9	1,6	6	0,02
02020-212	**02020-312**	12	10/18	6	9	1,6	6	0,02
02020-216	**02020-316**	16	13/22	8	12	2	8	0,04
02020-220	**02020-320**	20	15/25	12	18	2	9	0,04
02020-225	**02020-325**	25	15/25	12	18	2,5	9	0,04

Locating pin rhombic, Form C

Order No. short	Order No. long	D1	L1	D2	L2	L3	L4	B	T
02020-406	**02020-506**	6	7/12	4	6	1,2	4	1	0,02
02020-408	**02020-508**	8	10/16	6	9	1,6	6	1,6	0,02
02020-410	**02020-510**	10	10/18	6	9	1,6	6	2,5	0,02
02020-412	**02020-512**	12	10/18	6	9	1,6	6	2,5	0,02
02020-416	**02020-516**	16	13/22	8	12	2	8	3,5	0,04
02020-420	**02020-520**	20	15/25	12	18	2	9	5	0,04
02020-425	**02020-525**	25	15/25	12	18	2,5	9	5	0,04

Locating pins

with internal thread

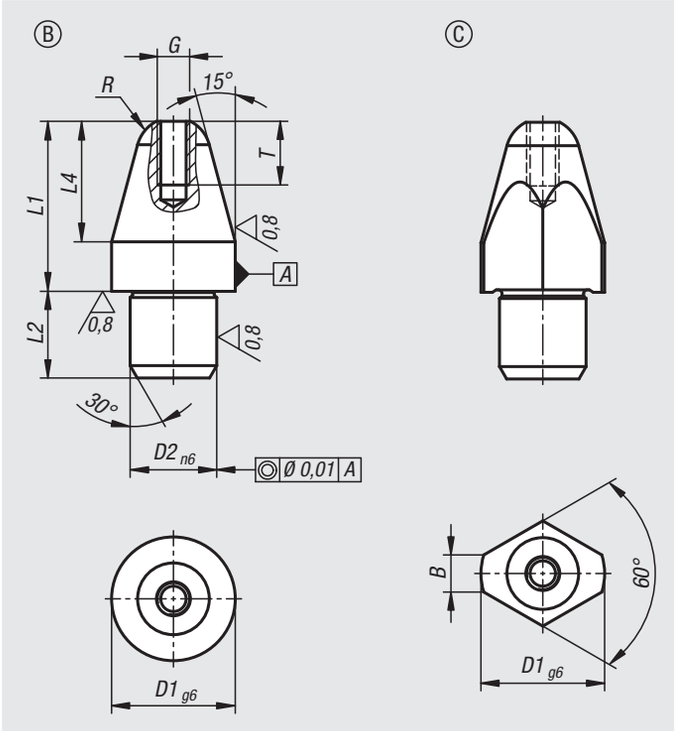

Material:
Steel.

Version:
Hardened and ground (HRC 60 ±2).

Sample order:
nlm 02025-208

Note:
Locating pins are specially designed to ease the locating process. When used in conjunction with the hardened locating bushes 02026, they allow for a rapid, precise and low-wear workpiece exchange.

Drawing reference:
Form B: cylindrical pin
Form C: rhomboid pin

Locating pins, short

Order No. Form B	Order No. Form C	Version	D1	D2	G	L1	L2	L4	R	B	T
02025-208	**02025-408**	short	8	6	M2,5	11,4	6	7,4	2,5	-/2,5	5
02025-210	**02025-410**	short	10	7	M2,5	13,7	7	9,7	3	-/3,0	5
02025-212	**02025-412**	short	12	8	M3	16	8	12	3,5	-/3,5	6
02025-216	**02025-416**	short	16	12	M4	20	12	15	5	-/5	8
02025-220	**02025-420**	short	20	14	M5	25,5	14	19,5	6	-/6	10

Locating pins, long

Order No. Form B	Order No. Form C	Version	D1	D2	G	L1	L2	L4	R	B	T
02025-308	**02025-508**	long	8	6	M2,5	17,4	6	7,4	2,5	-/2,5	5
02025-310	**02025-510**	long	10	7	M2,5	21,7	7	9,7	3	-/3,0	5
02025-312	**02025-512**	long	12	8	M3	24	8	12	3,5	-/3,5	6
02025-316	**02025-516**	long	16	12	M4	29	12	15	5	-/5	8
02025-320	**02025-520**	long	20	14	M5	35,5	14	19,5	6	-/6	10

Locating bushes

for locating pins

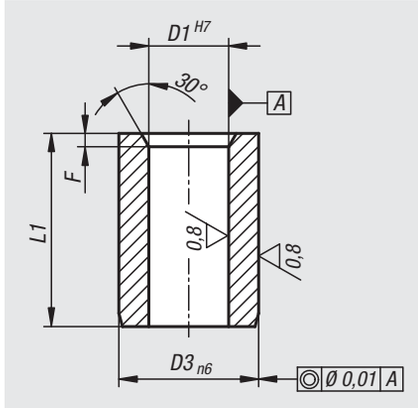

Material:
Steel.

Version:
Hardened and ground (HRC 60 ±2).

Sample order:
nlm 02026-0812

Order No.	Version	D1	D3	L1	F
02026-0812	short	8	12	12	1,2
02026-1014	short	10	15	14	1,5
02026-1216	short	12	18	16	1,5
02026-1620	short	16	26	20	1,5
02026-2026	short	20	30	26	2,5
02026-0818	long	8	12	18	1,2
02026-1022	long	10	15	22	1,5
02026-1224	long	12	18	24	1,5
02026-1630	long	16	26	30	1,5
02026-2036	long	20	30	36	2,5

Rest pads

pin form, internal thread

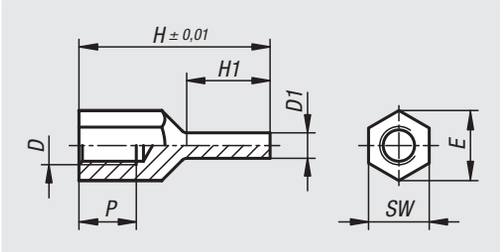

Material:
Carbon steel.

Version:
Tempered, black oxidised.
Seating face inductively hardened and ground.

Sample order:
nlm 02027-2060420

Note:
The rest pads can be used both as a stable and precise support and as a stop.
The pin form of the rest pad also allows it to be used with components with constricted support points.

Order No.	D	D1	E	H	H1	P	SW
02027-2060420	M6	4	11	20	8,5	6	10
02027-2060430	M6	4	11	30	13,5	9	10
02027-2080430	M8	4	14,4	30	13	10	13
02027-2080440	M8	4	14,4	40	18	14	13
02027-2080630	M8	6	14,4	30	13	10	13
02027-2080640	M8	6	14,4	40	18	14	13
02027-2100630	M10	6	19	30	12	10	17
02027-2100650	M10	6	19	50	25	15	17
02027-2100830	M10	8	19	30	12	10	17
02027-2100850	M10	8	19	50	25	15	17
02027-2120640	M12	6	21,2	40	18	12	19
02027-2120660	M12	6	21,2	60	28	18	19
02027-2120840	M12	8	21,2	40	18	12	19
02027-2120860	M12	8	21,2	60	28	18	19

Rest pads

pin form, external thread

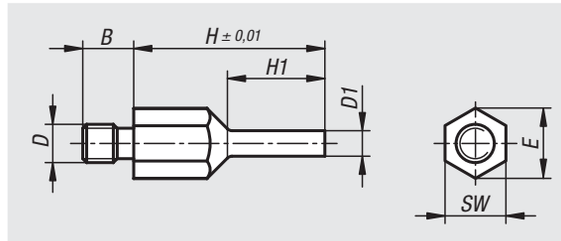

Material:
Carbon steel.

Version:
Tempered, black oxidised.
Seating face inductively hardened and ground.

Sample order:
nlm 02027-1060420

Note:
The rest pads can be used both as a stable and precise support and as a stop.
The pin form of the rest pad also allows it to be used with components with constricted support points.

Order No.	B	D	D1	E	H	H1	SW
02027-1060420	8	M6	4	11	20	10	10
02027-1060430	8	M6	4	11	30	15	10
02027-1080430	10	M8	4	14,4	30	15	13
02027-1080440	10	M8	4	14,4	40	20	13
02027-1080630	10	M8	6	14,4	30	15	13
02027-1080640	10	M8	6	14,4	40	20	13
02027-1100630	14	M10	6	19	30	15	17
02027-1100650	14	M10	6	19	50	25	17
02027-1100830	14	M10	8	19	30	15	17
02027-1100850	14	M10	8	19	50	25	17
02027-1120640	14	M12	6	21,2	40	20	19
02027-1120660	14	M12	6	21,2	60	30	19
02027-1120840	14	M12	8	21,2	40	20	19
02027-1120860	14	M12	8	21,2	60	30	19

Rest pads

Material:
Body carbon steel.

Version:
Body tempered and black oxidised.

Sample order:
nlm 02028-106012

Note:
Rest pads are for supporting machined and non-machined parts. They can also be used as stops and thrust pads in fixtures and toolmaking.
Studs or grub screws can be screwed and glued into the tapped hole D to make a rest pad with external thread.

Drawing reference:
Form A: flat face
Form B: ball end
Form C: diamond grip

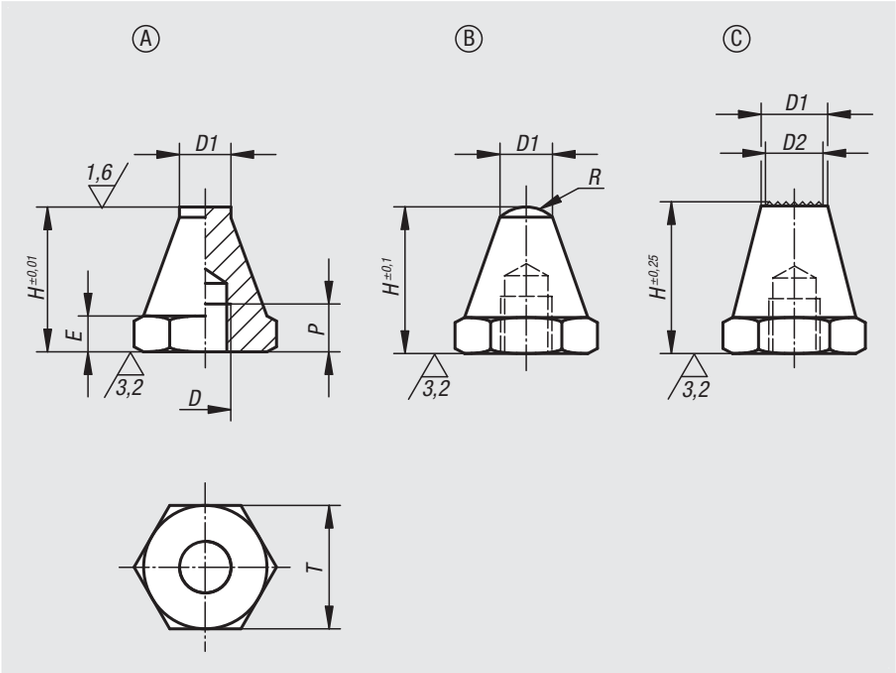

Order No. Form A	Order No. Form B	Order No. Form C	D	D1	D2	E	H	P	R	T
02028-106012	02028-206012	02028-306012	M6	6	-/-/5	3	12,5	4	-/5/-	11
02028-106025	02028-206025	02028-306025	M6	6	-/-/5	3	25	7	-/5/-	11
02028-108015	02028-208015	02028-308015	M8	8	-/-/6	4	15	6	-/8,5/-	13
02028-108030	02028-208030	02028-308030	M8	8	-/-/6	4	30	9	-/8,5/-	13
02028-110020	02028-210020	02028-310020	M10	10	-/-/8	5	20	9	-/9/-	17
02028-110040	02028-210040	02028-310040	M10	10	-/-/8	5	40	13	-/9/-	17
02028-112025	02028-212025	02028-312025	M12	12	-/-/9,5	6	25	11	-/12,75/-	19
02028-112050	02028-212050	02028-312050	M12	12	-/-/9,5	6	50	16	-/12,75/-	19
02028-116030	02028-216030	02028-316030	M16	16	-/-/13	8	30	12	-/17/-	24
02028-116060	02028-216060	02028-316060	M16	16	-/-/13	8	60	20	-/17/-	24

Rest pads

with positioning pin

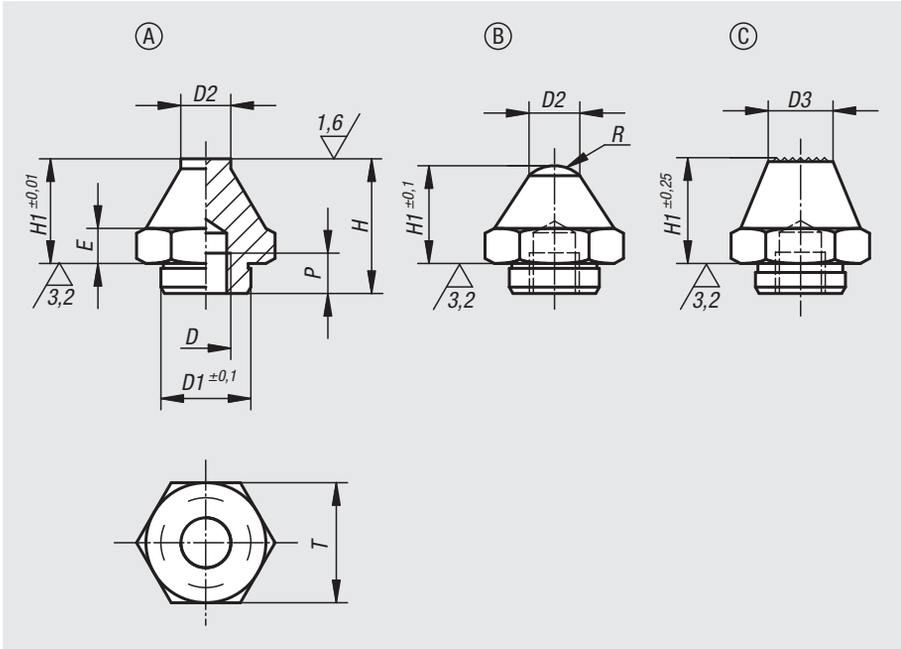

Material:
Body carbon steel.

Version:
Body tempered and black oxidised.
Contact faces case-hardened.

Sample order:
nlm 02029-106012

Note:
Rest pads are for supporting machined and unmachined parts. They can also be used as stops and thrust pads in fixtures and toolmaking. Studs or grub screws can be screwed and glued into the tapped hole D to make a support with external thread.

Drawing reference:
Form A: flat face
Form B: ball end
Form C: diamond grip

Order No.	Form	D	D1	D2	D3	E	H	H1	P	R	T
02029-106012	A	M6	11,9	7	-	4	16,5	12,5	6	-	17
02029-106025	A	M6	11,9	7	-	4	29	25	6	-	17
02029-110020	A	M10	17,8	10	-	7	25	20	10	-	24
02029-110040	A	M10	17,8	10	-	7	46	40	10	-	24
02029-116030	A	M16	25,8	20	-	13	40	30	16	-	41
02029-116060	A	M16	25,8	20	-	13	70	60	16	-	41
02029-206012	B	M6	11,9	7	-	4	16,5	12,5	6	6	17
02029-206025	B	M6	11,9	7	-	4	29	25	6	6	17
02029-210020	B	M10	17,8	10	-	7	25	20	10	7,5	24
02029-210040	B	M10	17,8	10	-	7	46	40	10	7,5	24
02029-216030	B	M16	25,8	20	-	13	40	30	16	26	41
02029-216060	B	M16	25,8	20	-	13	70	60	16	26	41
02029-310020	C	M10	17,8	-	15	7	25	20	10	-	24
02029-310040	C	M10	17,8	-	10	7	46	40	10	-	24
02029-316030	C	M16	25,8	-	20	13	40	30	16	-	41
02029-316060	C	M16	25,8	-	20	13	70	60	16	-	41

02030

Feet

with threaded pin, DIN 6320 (Edition 1971)

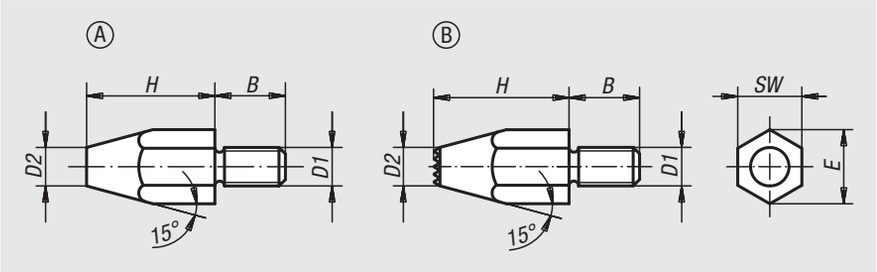

Material:
Carbon steel 1.1172.

Version:
Black oxidised.

Sample order:
nlm 02030-10

Note:
Rest pads 02010 and 02020 can also be used as feet.

Drawing reference:
Form A: Smooth face
Form B: Carbide tips

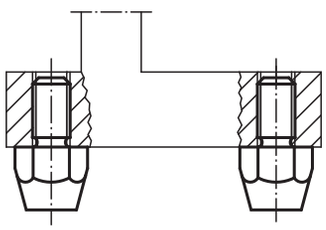

Order No.	Form	D1	D2	H	B	E	SW
02030-06	A	M6	8	10	11	11,5	10
02030-061	A	M6	6	20	11	11,5	10
02030-08	A	M8	10	15	13	15	13
02030-081	A	M8	9	30	13	15	13
02030-10	A	M10	13	20	16	19,6	17
02030-101	A	M10	13	40	16	19,6	17
02030-12	A	M12	15	25	20	21,9	19
02030-121	A	M12	15	50	20	21,9	19
02030-083	B	M8	11,5	15	13	15	13
02030-123	B	M12	15	25	20	21,9	19

02035

Extension pieces

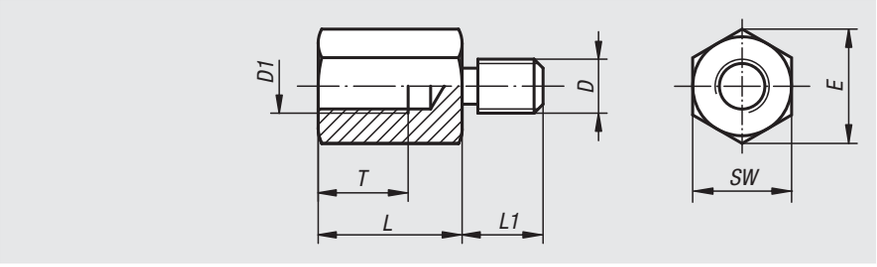

Material:
Carbon steel.

Version:
Black oxidised.

Sample order:
nlm 02035-120750

Note:
Extension pieces are used to extend self-aligning pads, spring plungers, positioning feet, rest pads etc.

Order No.	L	L1	T	D	D1	E	SW
02035-08025	25	13	15	M8	M8	15	13
02035-08032	32	13	15	M8	M8	15	13
02035-08040	40	13	15	M8	M8	15	13
02035-10025	25	15	17	M10	M10	19,6	17
02035-10032	32	15	17	M10	M10	19,6	17
02035-10040	40	15	17	M10	M10	19,6	17
02035-120320	32	18	20	M12	M12	25,4	22
02035-120500	50	18	20	M12	M12	25,4	22
02035-120750	75	18	20	M12	M12	25,4	22
02035-160320	32	25	20	M16	M16	31,2	27
02035-160500	50	25	30	M16	M16	31,2	27
02035-160750	75	25	30	M16	M16	31,2	27

Support bolts

Material:
Carbon steel, tempered.

Version:
Black oxidised.

Sample order:
nlm 02037-16016

Note:
The rounded nose also allows support bolts to be used as positioning elements for workpieces with matching holes.

The versions 02037-20020 and 02037-20040 have an octagonal collar.

Drawing reference:
1) locknut

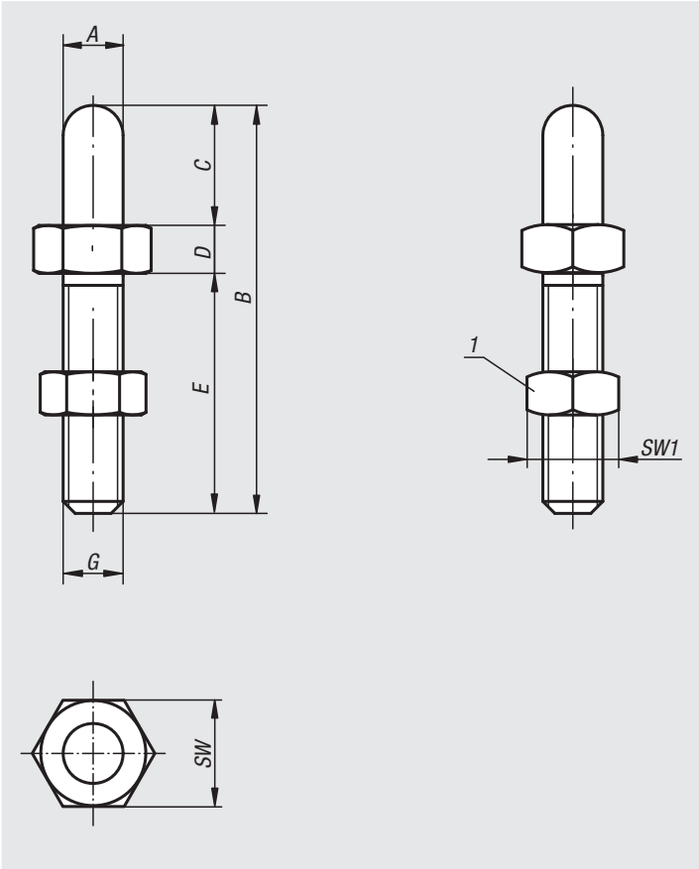

Order No.	A	B	C	D	E	G	SW	SW1
02037-06006	6	37	6	6	25	M6	13	10
02037-06012	6	43	12	6	25	M6	13	10
02037-08008	8	45	8	7	30	M8	13	13
02037-08016	8	53	16	7	30	M8	13	13
02037-10010	10	58	10	8	40	M10	17	17
02037-10020	10	68	20	8	40	M10	17	17
02037-12012	12	72	12	10	50	M12	19	19
02037-12024	12	84	24	10	50	M12	19	19
02037-16016	16	89	16	13	60	M16	24	24
02037-16032	16	105	32	13	60	M16	24	24
02037-20020	20	115	20	15	80	M20	36	30
02037-20040	20	135	40	15	80	M20	36	30

Positioning feet

Material:
Steel.

Version:
Case-hardened and black oxidised.

Sample order:
nlm 02040-215

Note:
Positioning feet are used as supports, stops and thrust pads for fixtures and general machine and appliance construction.

Drawing reference:
Form A: External thread and flat face
Form B: External thread and convex face
Form C: External thread and serrated face
Form K: External thread and carbide serrated face
Form L: External thread and POM insert
Form D: External thread and flat face
Form E: External thread and convex face
Form F: External thread and serrated face

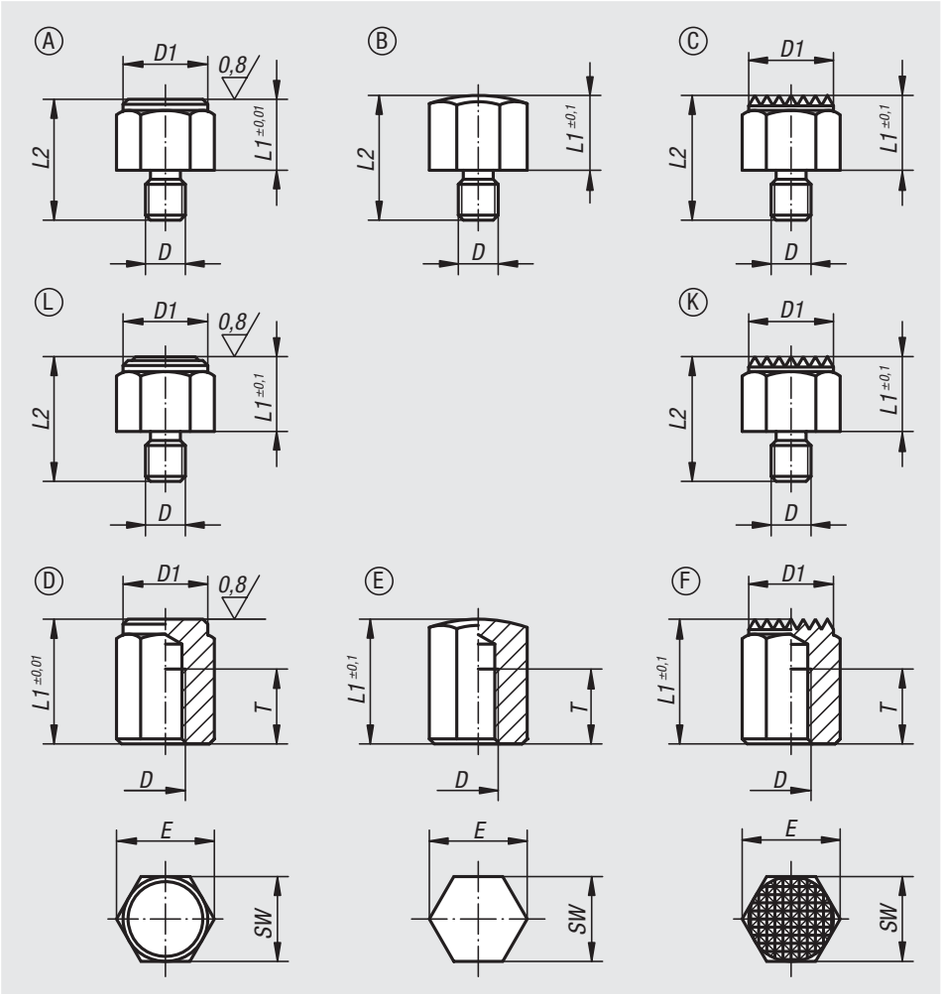

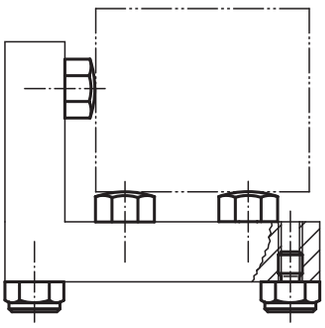

Order No.	Form	D	L1	D1	L2	E	SW	Tightening torque max. Nm
02040-108	A	M6	8	13	16	14,4	13	8,5
02040-1104	A	M6	10	13	20	14,4	13	8,5
02040-1081	A	M8	8	17	18	19,4	17	18
02040-1101	A	M8	10	17	20	19,4	17	18
02040-1103	A	M10	10	19	22	21,1	19	32
02040-1152	A	M10	15	19	27	21,1	19	32
02040-110	A	M12	10	22	24	25,2	22	60
02040-115	A	M12	15	22	29	25,2	22	60
02040-1151	A	M16	15	30	34	33	30	140
02040-1201	A	M16	20	30	39	33	30	140

Positioning feet

Order No.	Form	D	L1	L2	E	SW	Tightening torque max. Nm
02040-208	B	M6	8	16	14,4	13	8,5
02040-2104	B	M6	10	20	14,4	13	8,5
02040-2081	B	M8	8	18	19,4	17	18
02040-2101	B	M8	10	20	19,4	17	18
02040-2103	B	M10	10	22	21,1	19	32
02040-2152	B	M10	15	27	21,1	19	32
02040-210	B	M12	10	24	25,2	22	60
02040-215	B	M12	15	29	25,2	22	60
02040-2151	B	M16	15	34	33	30	140
02040-2201	B	M16	20	39	33	30	140

Order No.	Form	D	L1	D1	L2	E	SW	Tightening torque max. Nm
02040-308	C	M6	8	13	16	14,4	13	8,5
02040-3102	C	M6	10	13	20	14,4	13	8,5
02040-3081	C	M8	8	17	18	19,4	17	18
02040-3101	C	M8	10	17	20	19,4	17	18
02040-3103	C	M10	10	19	22	21,1	19	32
02040-3152	C	M10	15	19	27	21,1	19	32
02040-310	C	M12	10	22	24	25,2	22	60
02040-315	C	M12	15	22	29	25,2	22	60
02040-3151	C	M16	15	30	34	33	30	140
02040-3201	C	M16	20	30	39	33	30	140

Order No.	Form	D	L1	D1	L2	E	SW	Tightening torque max. Nm
02040-7101	K	M8	10	17	20	19,4	17	18
02040-710	K	M12	10	22	24	25,2	22	60
02040-715	K	M12	15	22	29	25,2	22	60
02040-7151	K	M16	15	30	34	33	30	140
02040-7201	K	M16	20	30	39	33	30	140

Order No.	Form	D	L1	D1	L2	E	SW	Tightening torque max. Nm
02040-8101	L	M8	10	17	20	19,4	17	18
02040-810	L	M12	10	22	24	25,2	22	60
02040-815	L	M12	15	22	29	25,2	22	60
02040-8151	L	M16	15	30	34	33	30	140
02040-8201	L	M16	20	30	39	33	30	140

Positioning feet

Order No.	Form	D	L1	D1	T	E	SW
02040-410	D	M6	10	13	6	14,4	13
02040-4151	D	M6	15	13	10	14,4	13
02040-4101	D	M8	10	17	6	19,4	17
02040-415	D	M8	15	17	6	19,4	17
02040-4251	D	M8	25	17	16	19,4	17
02040-4201	D	M10	20	19	10	21,1	19
02040-4302	D	M10	30	19	15	21,1	19
02040-4401	D	M10	40	19	15	21,1	19
02040-420	D	M12	20	22	10	25,2	22
02040-425	D	M12	25	22	15	25,2	22
02040-430	D	M12	30	22	20	25,2	22
02040-440	D	M12	40	22	25	25,2	22
02040-450	D	M12	50	22	25	25,2	22
02040-4301	D	M16	30	30	20	33	30
02040-4501	D	M16	50	30	25	33	30

Order No.	Form	D	L1	T	E	SW
02040-510	E	M6	10	6	14,4	13
02040-5151	E	M6	15	10	14,4	13
02040-5101	E	M8	10	6	19,4	17
02040-515	E	M8	15	6	19,4	17
02040-5251	E	M8	25	16	19,4	17
02040-5201	E	M10	20	10	21,1	19
02040-5302	E	M10	30	15	21,1	19
02040-5401	E	M10	40	15	21,1	19
02040-520	E	M12	20	10	25,2	22
02040-525	E	M12	25	15	25,2	22
02040-530	E	M12	30	20	25,2	22
02040-540	E	M12	40	25	25,2	22
02040-550	E	M12	50	25	25,2	22
02040-5301	E	M16	30	20	33	30
02040-5501	E	M16	50	25	33	30

Order No.	Form	D	L1	D1	T	E	SW
02040-610	F	M6	10	13	6	14,4	13
02040-6151	F	M6	15	13	10	14,4	13
02040-6101	F	M8	10	17	6	19,4	17
02040-615	F	M8	15	17	6	19,4	17
02040-6251	F	M8	25	17	16	19,4	17
02040-6201	F	M10	20	19	10	21,1	19
02040-6302	F	M10	30	19	15	21,1	19
02040-6401	F	M10	40	19	15	21,1	19
02040-620	F	M12	20	22	10	25,2	22
02040-625	F	M12	25	22	15	25,2	22
02040-630	F	M12	30	22	20	25,2	22
02040-640	F	M12	40	22	25	25,2	22
02040-650	F	M12	50	22	25	25,2	22
02040-6301	F	M16	30	30	20	33	30
02040-6501	F	M16	50	30	25	33	30

Positioning feet

Material:
Body carbon steel.

Version:
Body tempered and black oxidised.
Contact faces case-hardened.

Sample order:
nlm 02041-106010

Note:
The positioning feet act as supports for rough and machined parts. They can also be used as stops and thrust pads in fixtures and toolmaking.

Drawing reference:
Form A: Flat face hardened
Form B: Flat face hardened and ground
Form C: Spherical face hardened
Form D: Serrated face tempered

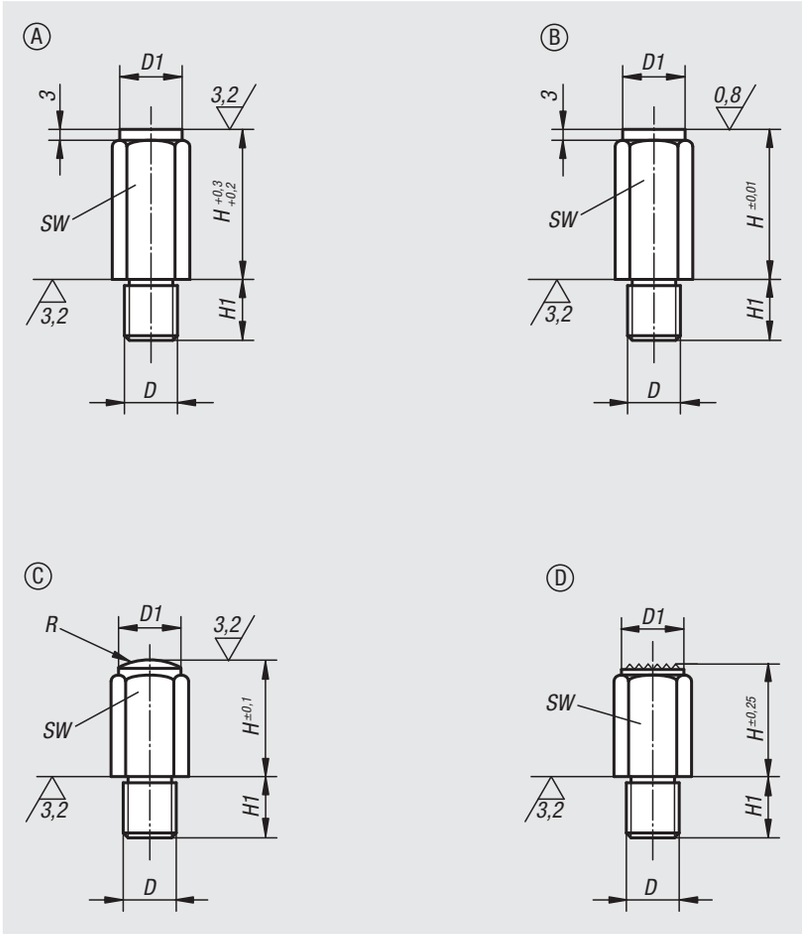

Order No. Form A	Order No. Form B	Order No. Form C	Order No. Form D	D	D1	H	H1	R	SW
02041-106010	02041-206010	02041-306010	02041-406010	M6	10	10	11	-/-/15/-	10
02041-106020	02041-206020	02041-306020	02041-406020	M6	10	20	11	-/-/15/-	10
02041-108010	02041-208010	02041-308010	-	M8	13	10	13	-/-/20	13
02041-108015	02041-208015	02041-308015	02041-408015	M8	13	15	13	-/-/20/-	13
02041-108030	02041-208030	02041-308030	02041-408030	M8	13	30	13	-/-/20/-	13
02041-110010	02041-210010	02041-310010	-	M10	17	10	16	-/-/30	17
02041-110020	02041-210020	02041-310020	02041-410020	M10	17	20	16	-/-/30/-	17
02041-110040	02041-210040	02041-310040	02041-410040	M10	17	40	16	-/-/30/-	17
02041-112010	02041-212010	02041-312010	-	M12	19	10	20	-/-/40	19
02041-112025	02041-212025	02041-312025	02041-412025	M12	19	25	20	-/-/35/-	19
02041-112050	02041-212050	02041-312050	02041-412050	M12	19	50	20	-/-/35/-	19
02041-116015	02041-216015	02041-316015	-	M16	27	15	24	-/-/50	27
02041-116030	02041-216030	02041-316030	02041-416030	M16	27	30	24	-/-/50/-	27
02041-116060	02041-216060	02041-316060	02041-416060	M16	27	60	24	-/-/50/-	27
02041-120040	02041-220040	02041-320040	02041-420040	M20	32	40	29	-/-/60/-	32
02041-120080	02041-220080	02041-320080	02041-420080	M20	32	80	29	-/-/60/-	32

Fixture feet

with external thread

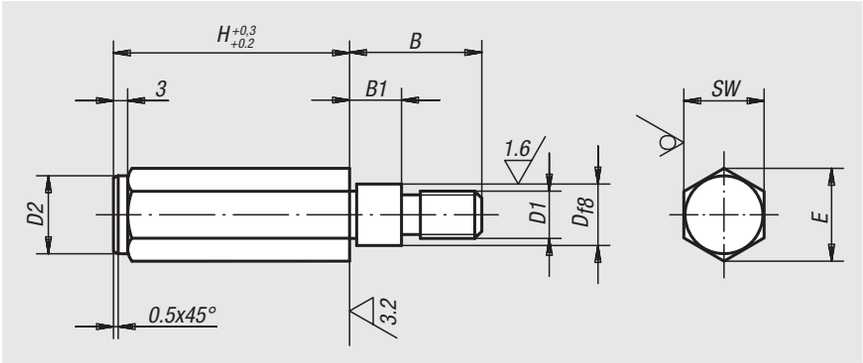

Material:
Carbon steel 1.1181.

Version:
Black oxidised.

Sample order:
nlm 02050-10X75 (include height H)

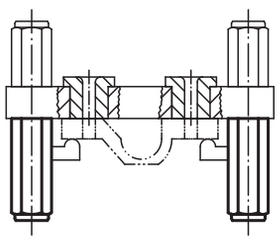

Order No.	H	B	B1	D	D1	D2	E	SW
02050-10X	50/75/100	28	11	11	M10	16,5	19,5	17
02050-12X	50/75/100/125	35	18	13	M12	18,5	21,5	19

Application of a drilling jig

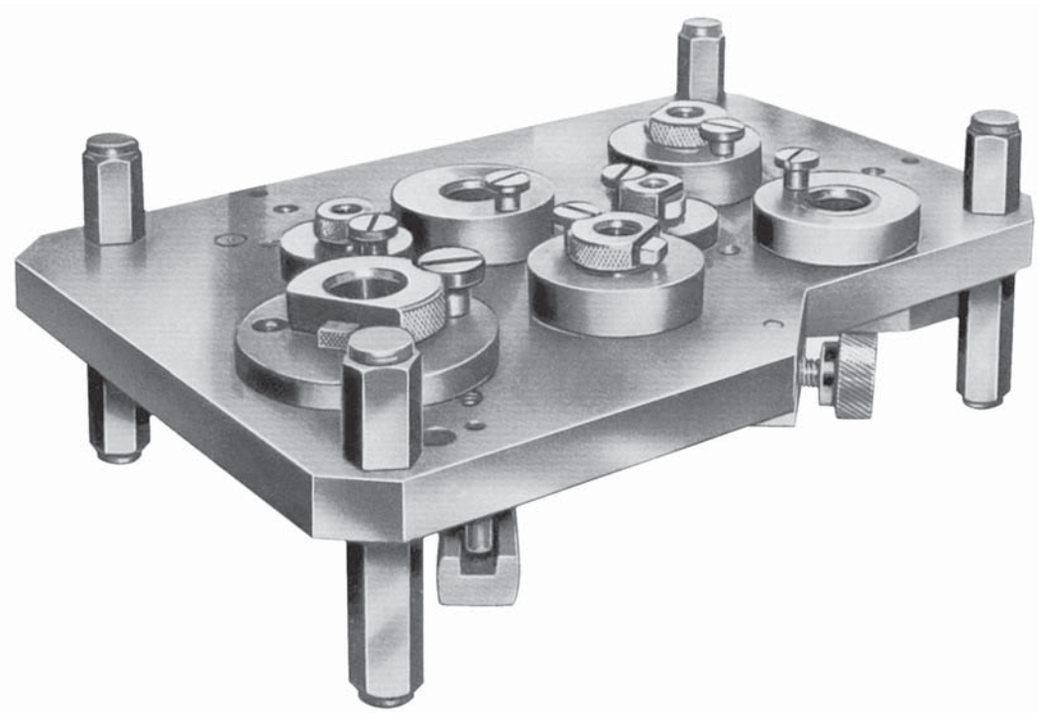

Fixture feet

with internal thread

Material:
Body carbon steel.

Version:
Body tempered and black oxidised.
Contact faces case-hardened.

Sample order:
nlm 02070-106X20

Note:
Fixture feet with internal thread are used as supports for fixtures or rough or machined workpieces. They can also be used as stops or thust pads in fixtures and toolmaking.

Drawing reference:
Form A: Flat face hardened
Form B: Flat face hardened and ground
Form C: Spherical face hardened
Form D: Serrated face tempered

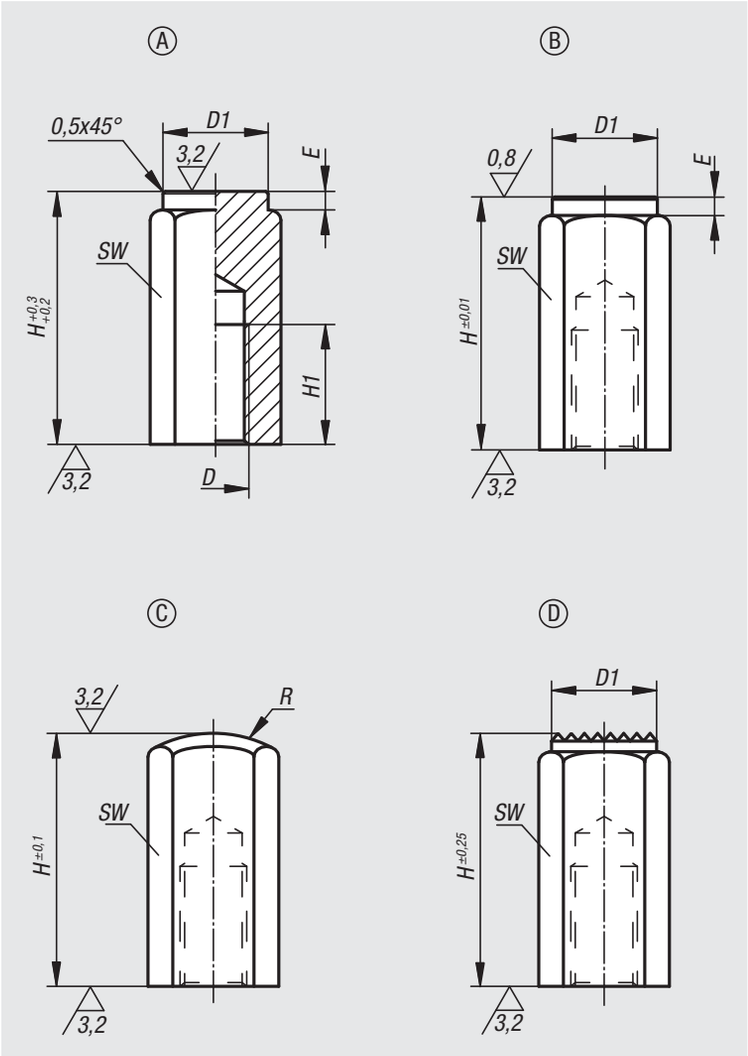

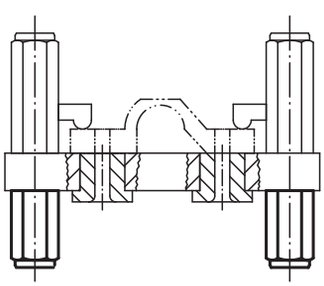

Order No. Form A	Order No. Form B	Order No. Form C	Order No. Form D	D	D1	E	H	H1	R	SW
02070-106X20	02070-206X20	02070-306X20	02070-406X20	M6	9,5/9,5/-/9,5	2/2/-/-	20	12	-/-/15/-	10
02070-106X40	02070-206X40	02070-306X40	02070-406X40	M6	9,5/9,5/-/9,5	2/2/-/-	40	12	-/-/15/-	10
02070-110X32	02070-210X32	02070-310X32	02070-410X32	M10	16,5/16,5/-/16,5	3/3/-/-	32	18	-/-/30/-	17
02070-110X63	02070-210X63	02070-310X63	02070-410X63	M10	16,5/16,5/-/16,5	3/3/-/-	63	18	-/-/30/-	17
02070-112X32	02070-212X32	02070-312X32	02070-412X32	M12	18,5/18,5/-/18,5	3/3/-/-	32	18	-/-/35/-	19
02070-112X63	02070-212X63	02070-312X63	02070-412X63	M12	18,5/18,5/-/18,5	3/3/-/-	63	18	-/-/35/-	19
02070-116X50	02070-216X50	02070-316X50	02070-416X50	M16	23/23/-/23	4/4/-/-	50	24	-/-/40/-	24
02070-116X100	02070-216X100	02070-316X100	02070-416X100	M16	23/23/-/23	4/4/-/-	100	24	-/-/40/-	24

Self-aligning pads

swivel 12°

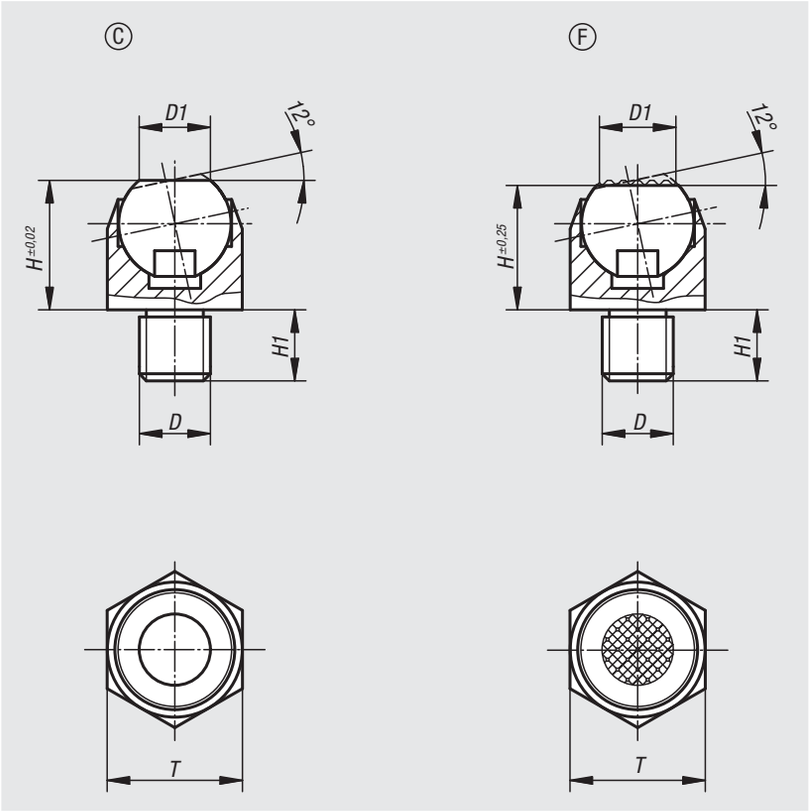

Material:
Body carbon steel.
Ball, ball-bearing steel 1.3505.

Version:
Body tempered.
Ball hardened (50 - 55 HRC).

Sample order:
nlm 02080-106

Note:
Self-aligning pads serve as stops, supports and thrust pads in fixture construction. They can also be installed in existing clamping devices, e.g. arness clamps.

Ball is secured against rotation.

Drawing reference:
Form C: male thread, smooth flattened ball
Form F: male thread, serrated flattened ball

Order No. Form C	Order No. Form F	D	D1	H	H1	Ball-Ø	T	Load rating max. kN (static load only)
02080-106	**02080-306**	M6	6,7	13	7	10	13	10
02080-108	**02080-308**	M8	6,7	13	8	10	13	10
02080-110	**02080-310**	M10	10	18	10	16	19	25
02080-112	**02080-312**	M12	10	18	12	16	19	25
02080-116	**02080-316**	M16	20	27	16	24	30	90
02080-120	**02080-320**	M20	20	27	20	24	30	90

Notes

Self-aligning pads

self-righting

Material:
Form C and F:
Ball steel, ball seat high-carbon steel.
Form G and J:
Ball high-carbon steel, ball seat steel.

Version:
Form C and F:
Ball hardened and black oxidised, ball seat phosphated.
Form G and J:
Ball phosphated, ball seat hardened and black oxidised.

Sample order:
nlm 02081-106

Note:
The self-aligning pads serve as stops, rests and thrust pads in fixture construction.
The seating face returns to the start position when the load is removed.

Ball secured against rotation.

Drawing reference:
Form C: male thread, flattened ball, smooth
Form F: male thread, flattened ball, diamond grip
Form G: press fit, flattened ball, smooth
Form J: press fit, flattened ball, diamond grip

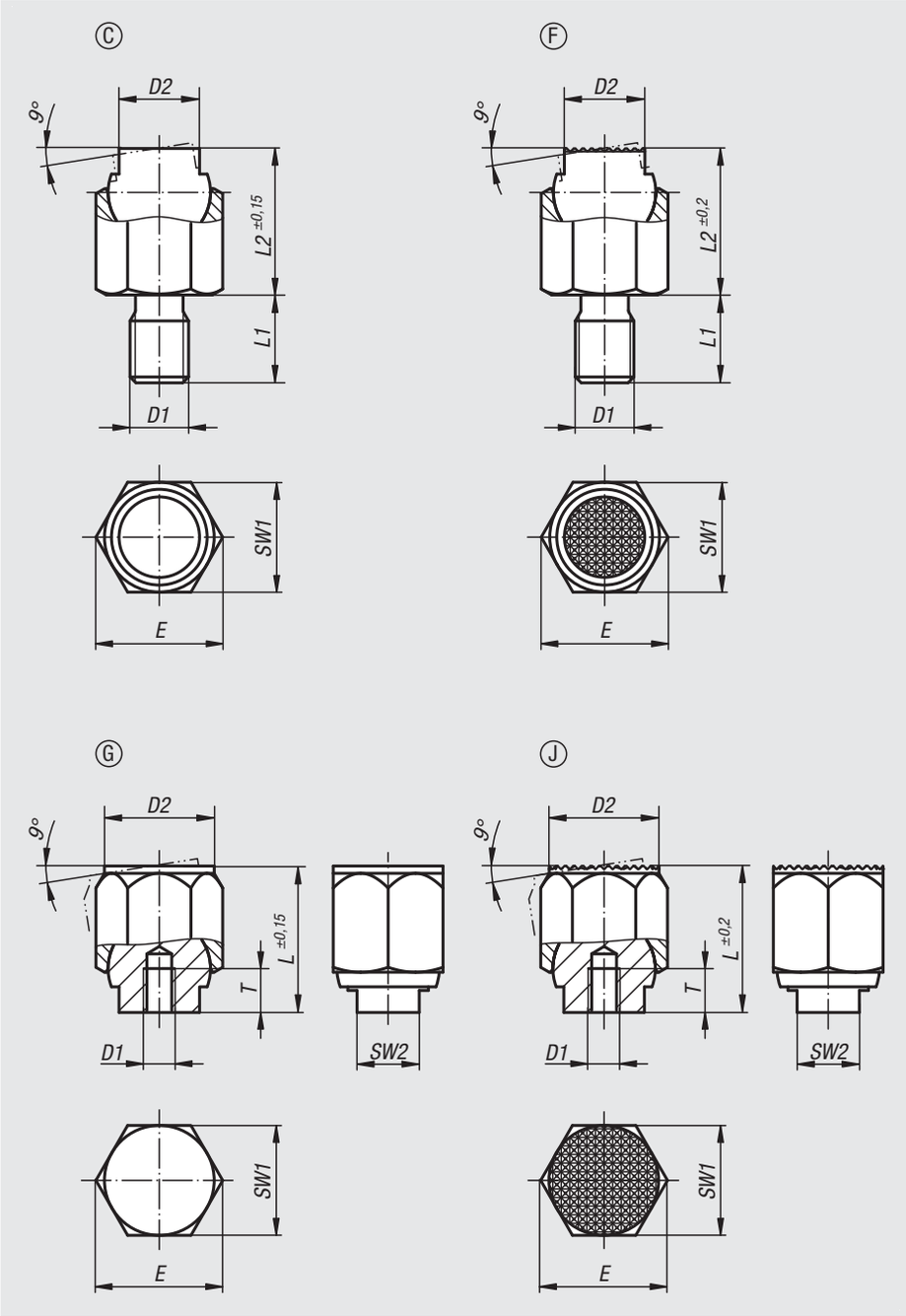

Self-aligning pads

self-righting

Order No.	Form	D1	D2	L1	L2	E	SW1	Ball-Ø	Load rating max. kN (static load only)
02081-106	C	M6	7	9	13	11,5	10	9	8
02081-108	C	M8	9,5	12	18	15	13	12	16
02081-110	C	M10	14	15	25	21,9	19	17	32
02081-112	C	M12	20	18	36	31,2	27	25	64
02081-116	C	M16	22	24	40	34,6	30	28	90

Order No.	Form	D1	D2	L1	L2	E	SW1	Ball-Ø	Load rating max. kN (static load only)
02081-306	F	M6	7	9	13	11,5	10	9	8
02081-308	F	M8	9,5	12	18	15	13	12	16
02081-310	F	M10	14	15	25	21,9	19	17	32
02081-312	F	M12	20	18	36	31,2	27	25	64
02081-316	F	M16	22	24	40	34,6	30	28	90

Order No.	Form	D1	D2	L	E	SW1	SW2	Ball-Ø	Load rating max. kN (static load only)
02081-403	G	M3	9	13	11,5	10	6	9	8
02081-404	G	M4	12	18	15	13	8	12	16
02081-405	G	M5	18	25	21,9	19	10	17	32
02081-406	G	M6	26	36	31,2	27	16	25	64
02081-408	G	M8	30	40	34,6	30	17	28	90

Order No.	Form	D1	D2	L	E	SW1	SW2	Ball-Ø	Load rating max. kN (static load only)
02081-603	J	M3	9	13	11,5	10	6	9	8
02081-604	J	M4	12	18	15	13	8	12	16
02081-605	J	M5	18	25	21,9	19	10	17	32
02081-606	J	M6	26	36	31,2	27	16	25	64
02081-608	J	M8	30	40	34,6	30	17	28	90

02090

Locating feet

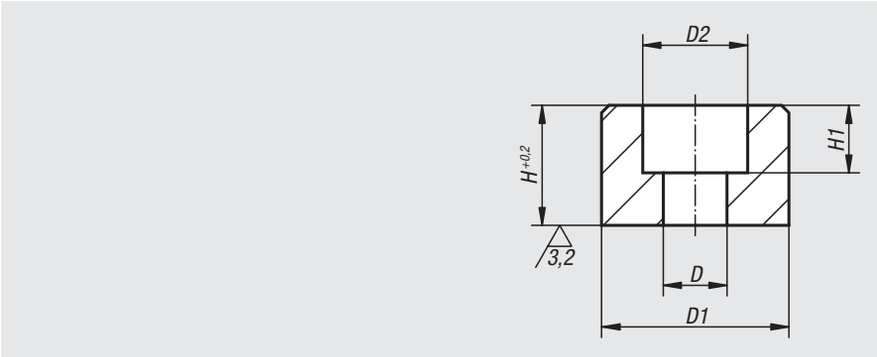

Material:
Free-cutting steel 1.0718.

Version:
Hardened, black oxidised.

Sample order:
nlm 02090-08

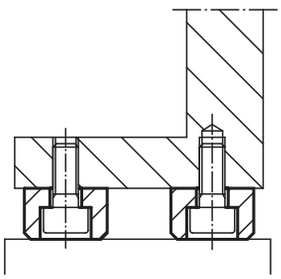

Order No.	D	D1	D2	H	H1
02090-05	5,5	16	10	10	5,7
02090-06	6,6	20	11	12	7
02090-08	9	25	15	16	9
02090-10	11	32	18	20	11
02090-12	13,5	36	20	25	13

02110

Swivel pads

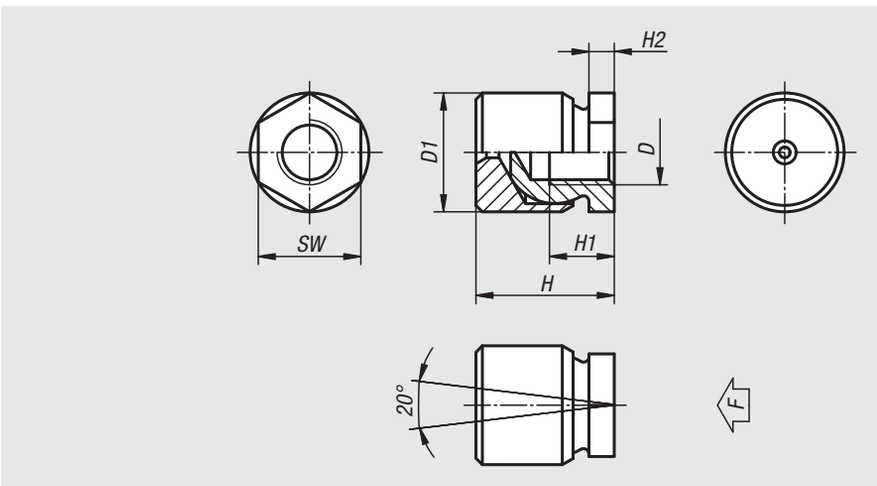

Material:
Ball element case-hardened steel.
Thrust pad ETG 100 steel.

Version:
Black oxidised.

Sample order:
nlm 02110-10

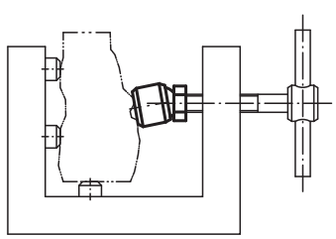

Order No.	D	D1	H	H1	H2	SW	F max. N
02110-05	M5	13	16,5	6,5	4	10	1620
02110-06	M6	13	16,5	8,5	4	10	2330
02110-08	M8	16	21	9	4	13	4150
02110-10	M10	19	23	10	4	17	6480
02110-12	M12	22	25,5	12	4,7	19	8320
02110-16	M16	25	29,5	14	5	24	13940
02110-20	M20	32	36	18	8,5	30	21000

02130

Rest pads

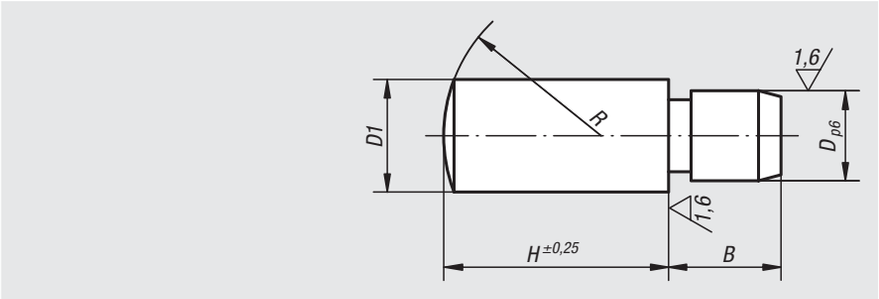

Material:
Steel 1.0301.

Version:
Case-hardened, black oxidised and ground.

Sample order:
nlm 02130-05X8 (include height H)

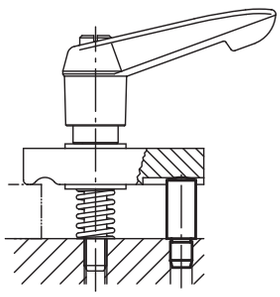

Order No.	H	B	D	D1	R
02130-05X	8/10/12/16	5	4	5	7
02130-06X	10/12/16/20	6	5	6	8
02130-08X	12/16/20/25	8	6	8	11
02130-10X	16/20/25/32	10	8	10	14
02130-12X	20/25/32/40	12	10	12	16
02130-14X	20/25/32/40	14	12	14	20
02130-16X	25/32/40/50	16	14	16	25
02130-20X	25/32/40/50	20	16	20	28

02150

Rest pads adjustable

with locknut

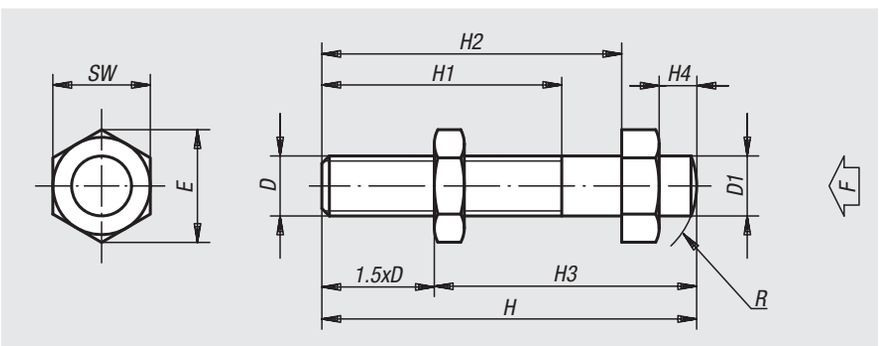

Material:
Carbon steel 1.1181.

Version:
Surface hardened, black oxidised.

Sample order:
nlm 02150-05

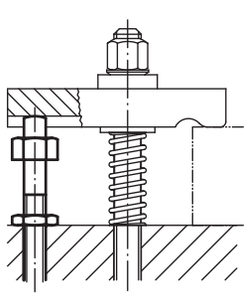

Order No.	D	D1	H	H1	H2	H3 min.	H3 max.	H4	E	SW	R	F ca.N
02150-05	M5	5	50	32	40	20,5	42,5	5	11,5	10	7	1000
02150-06	M6	6	50	32	40	21	41	5	11,5	10	8	1430
02150-08	M8	8	50	32	40	22	38	5	15	13	11	2620
02150-10	M10	10	52	32	40	25	37	5	19,6	17	14	4180
02150-101	M10	10	70	32	56	42	55	6	19,6	17	14	4180
02150-12	M12	12	70	40	56	36	52	6	21,9	19	16	6100
02150-121	M12	12	95	50	80	51	77	6	21,9	19	16	6100
02150-14	M14	14	100	63	80	44	79	8	25,4	22	20	8320
02150-16	M16	16	100	63	80	45	76	8	27,7	24	25	11520
02150-161	M16	16	120	63	100	65	96	8	27,7	24	25	11520
02150-20	M20	20	110	70	88	50	90	10	34,6	30	28	18000

Rest pads

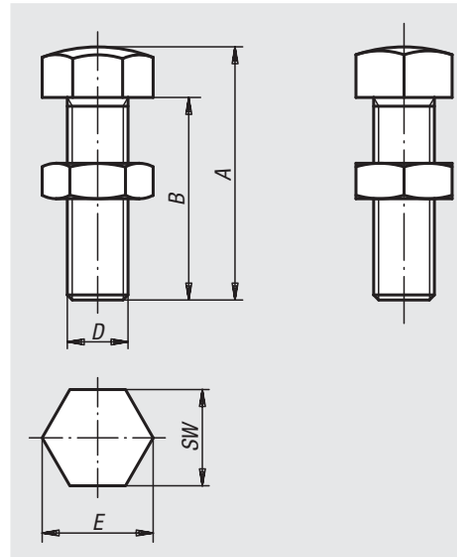

Material:
Carbon steel or brass

Version:
Tempered and black oxidised.

Sample order:
nlm 02153-16055

Order No.	Material	A	B	D	E	SW
02153-06030	high carbon steel	30	25	M6	11,5	10
02153-06040	high carbon steel	40	35	M6	11,5	10
02153-06050	high carbon steel	50	45	M6	11,5	10
02153-08036	high carbon steel	36	30	M8	15	13
02153-08046	high carbon steel	46	40	M8	15	13
02153-08056	high carbon steel	56	50	M8	15	13
02153-10042	high carbon steel	42	35	M10	19,6	17
02153-10048	high carbon steel	48	40	M10	19,6	17
02153-10058	high carbon steel	58	50	M10	19,6	17
02153-10068	high carbon steel	68	60	M10	19,6	17
02153-12048	high carbon steel	50	42	M12	21,9	19
02153-12070	high carbon steel	70	60	M12	21,9	19
02153-12080	high carbon steel	80	70	M12	21,9	19
02153-16055	high carbon steel	55	45	M16	27,7	24
02153-16075	high carbon steel	75	65	M16	27,7	24
02153-16085	high carbon steel	85	75	M16	27,7	24
02153-12148	brass	50	42	M12	21,9	19
02153-16155	brass	55	45	M16	27,7	24

Jack screws

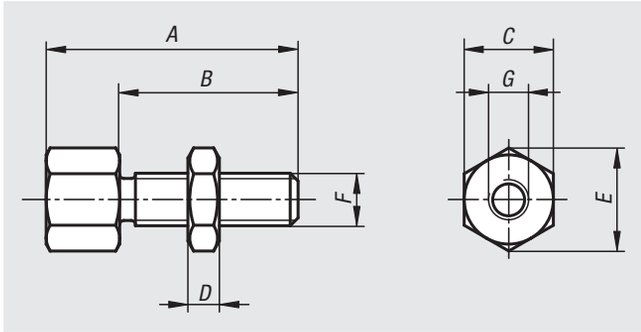

Material:
Carbon steel.

Version:
Black oxidised.

Sample order:
nlm 02155-0803006

Drawing reference:
1) screw rest
2) jack screw

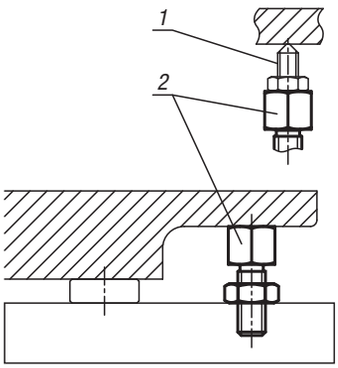

Order No.	A	B	C	D	E	F	G
02155-0803006	30	20	13	5	14,4	M8	M6x6
02155-0804006	40	30	13	5	14,4	M8	M6x6
02155-1003808	38	24	17	6	18,9	M10	M8x8
02155-1004808	48	34	17	6	18,9	M10	M8x8
02155-1205110	51	33	22	7	24,5	M12	M10x10
02155-1206610	66	48	22	7	24,5	M12	M10x10
02155-1606212	62	40	27	10	30,1	M16	M12x12
02155-1607712	77	55	27	10	30,1	M16	M12x12

Stop, adjustable

with end position feedback

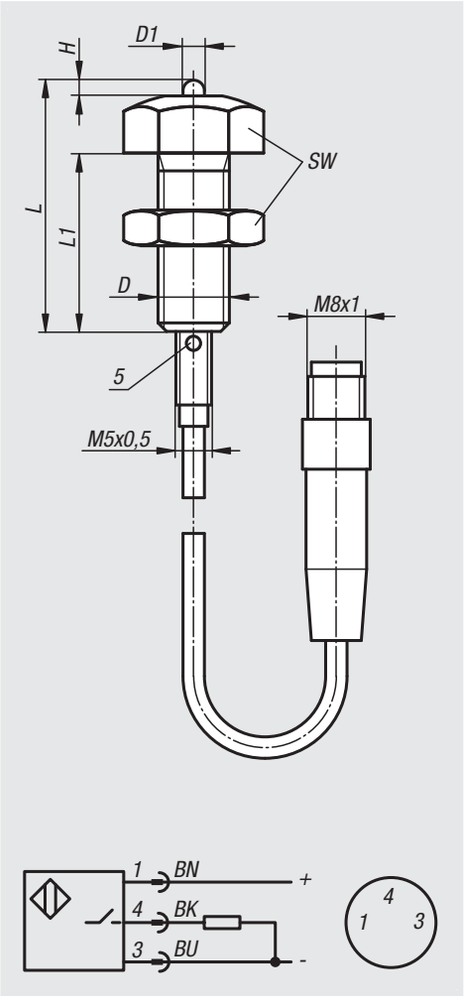

Material:
Screw and plunger stainless steel 1.4301
Guide bush stainless steel 1.4112
Sensor housing stainless steel.

Version:
Screw and plunger, bright.
Guide bushing, bright.
Sensor housing, bright.
Inductive sensor:
Relay (NO)
Operating voltage 10 - 30 V DC
Operating current 100 mA
Switching distance 0.8 mm
Protection class: IP 67
Connection type: 0.3 m PUR cable with connector plug
Temperature range: -25°C - +70°C
Approval: CE, c-UL-us

Sample order:
nlm 02160-080352

Note:
The ensured sensing distance is achieved if the plunger is actuated flush up to the stop surface of the guide bush. The sensor is supplied unassembled.

Installation recommendation: glue in with Loctite 638.

Caution: screw sensor in until it comes to a stop.

Safety:
End position feedback stops are not suitable for personal protection.

Drawing reference:
5) LED-indicator

BN = brown
BK = black
BU = blue

Order No.	Size	D	D1	H	L	L1	SW
02160-080352	1	M8	3	2	35,2	25	13
02160-100352	2	M10	3	2	35,2	25	17
02160-120352	3	M12	3	2	35,2	25	19

02170

Screw rest

with flat face, steel

Material:
Carbon steel.

Version:
Painted, trapezoidal thread - self-locking, spindle has end lock

Sample order:
nlm 02170-02

Note:
The version 02170-01 has no Ø 12 centring hole.

Drawing reference:
1) centring hole for 02210

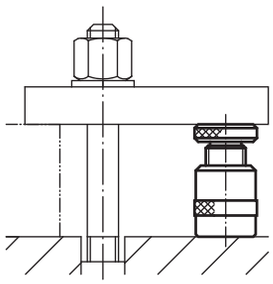

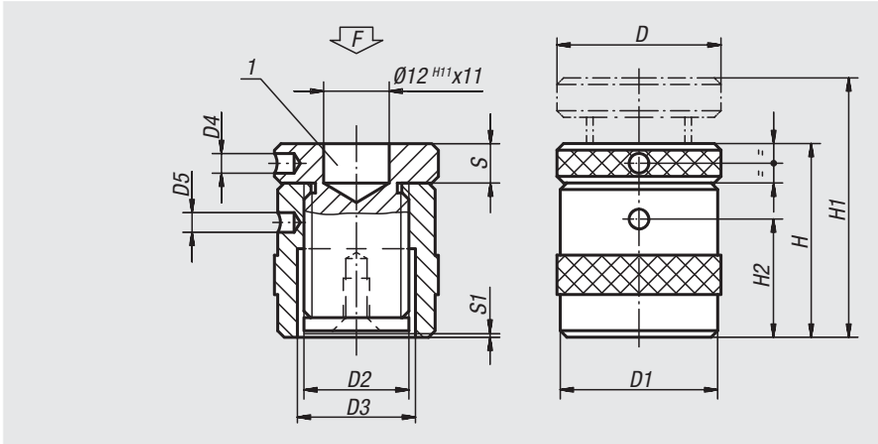

Order No.	D	D1	D2	D3	D4	D5	H	H1	H2	S	S1	F max. kN
02170-01	31	31	Tr 20X4	23	4	4	38	52	23	8	2	15
02170-015	50	49	Tr 30X4	36	6	6	42	52	24	12	2	60
02170-02	50	49	Tr 30X4	36	6	6	50	72	30	12	0,5	60
02170-03	50	49	Tr 30X4	36	6	6	71	102	43	16	1,5	60
02170-04	65	70	Tr 40X7	43	6	6	100	140	58	25	2,5	100
02170-05	70	80	Tr 50X8	55	6	6	140	212	90	30	4	170
02170-06	80	100	Tr 65X10	70	6	8	190	300	126	34	5	350

02171

Screw rest

with flat face, stainless steel

Material:
Stainless steel 1.4305.

Version:
Self-locking trapezoidal thread, spindle has end lock.

Sample order:
nlm 02171-02

Note:
The through hole allows easy clamping and positioning of the workpiece.

Drawing reference:
1) centring hole for 02210

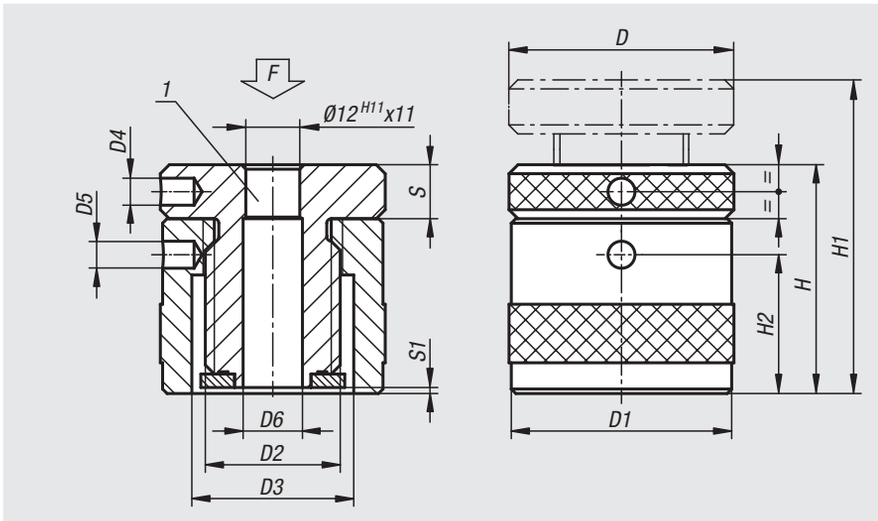

Order No.	D	D1	D2	D3	D4	D5	D6	H	H1	H2	S	S1	F max. kN
02171-015	50	49	Tr 30X4	36	6	6	13	42	52	24	12	2	50
02171-02	50	49	Tr 30X4	36	6	6	13	50	72	30	12	0,5	50
02171-03	50	49	Tr 30X4	36	6	6	13	71	102	43	16	1,5	50

02180

Screw rest

with flat face, aluminium

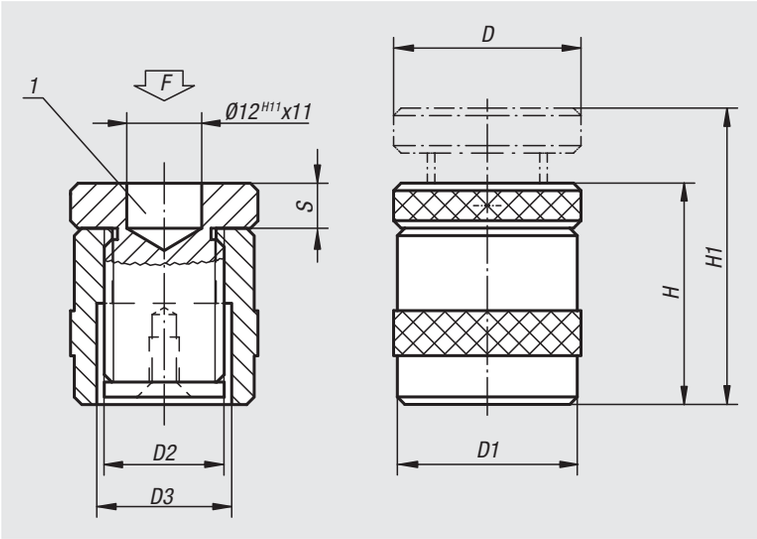

Material:
Aluminium (400 N/mm² tensile strength).
Spindle carbon steel.

Version:
Self-locking trapezoidal thread, spindle has end lock.

Sample order:
nlm 02180-01

Drawing reference:
1) centring hole for 02210

Order No.	D	D1	D2	D3	H	H1	S	F max. kN
02180-01	50	50	Tr 30X4	36	42	52	12	30
02180-02	50	50	Tr 30X4	36	50	70	12	30
02180-03	50	50	Tr 30X4	36	100	100	12	30

02182

Screw rest

with flat face and magnetic foot, aluminium

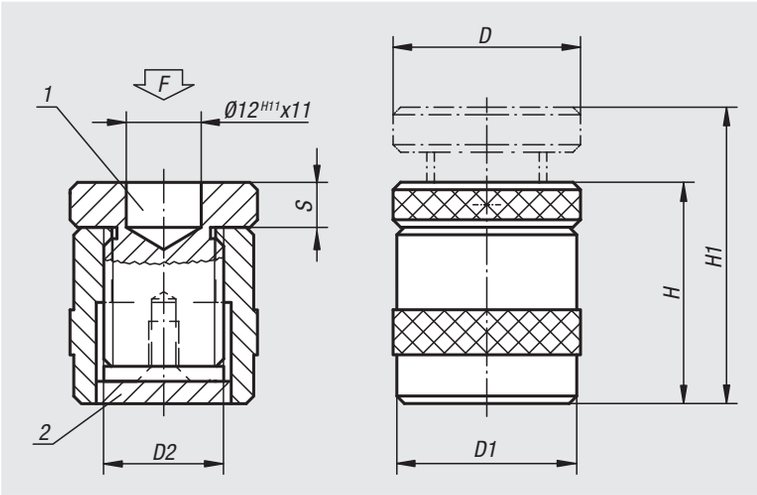

Material:
Aluminium (400 N/mm² tensile strength).
Spindle carbon steel.

Version:
Self-locking trapezoidal thread, spindle has end lock.

Sample order:
nlm 02182-01

Note:
Suitable for horizontal and vertical applications. The magnetic foot allows durable and accurate vertical positioning of the workpiece.

Drawing reference:
1) centring hole for 02210
2) magnetic foot

Order No.	D	D1	D2	H	H1	S	F max. kN
02182-01	50	50	Tr 30X4	52	62	12	30
02182-02	50	50	Tr 30X4	60	80	12	30
02182-03	50	50	Tr 30X4	80	110	12	30

Atlas jack

with locknut

Material:
Carbon steel.

Version:
Hammertone, spindle with 30 x 6 trapezoidal thread.

Sample order:
nlm 02190-03

Drawing reference:
1) centring hole for 02210

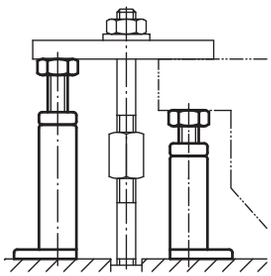

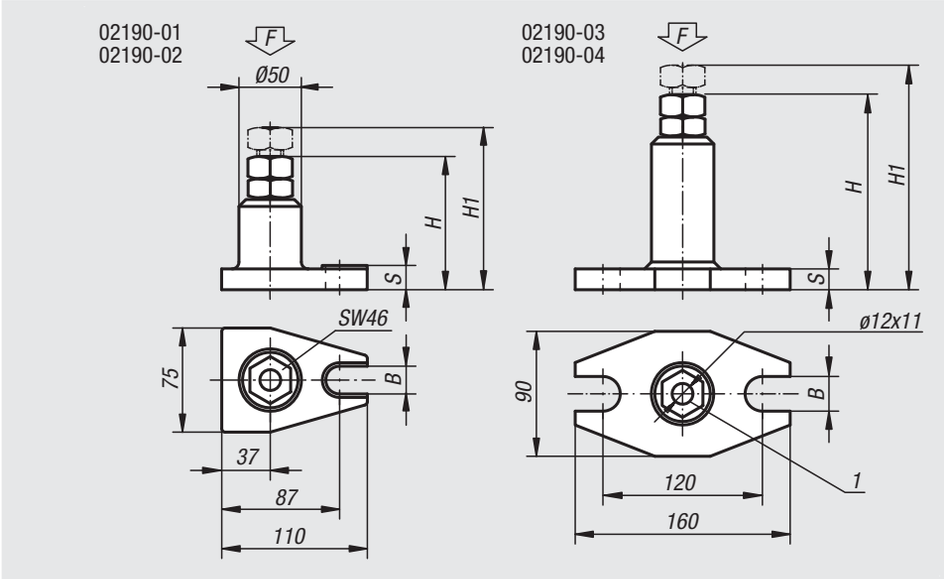

Order No.	Adjustment range	base plate	H	H1	B	S	F kN
02190-01	100 - 140	76x111	100	140	18	17	60
02190-02	140 - 200	76x111	140	200	18	17	60
02190-03	200 - 320	90x160	200	320	22	22	40
02190-04	320 - 540	90x160	320	540	22	25	25

Notes

Screw rest inserts

spherical, centring disc, prism, locating pin, revolving ball

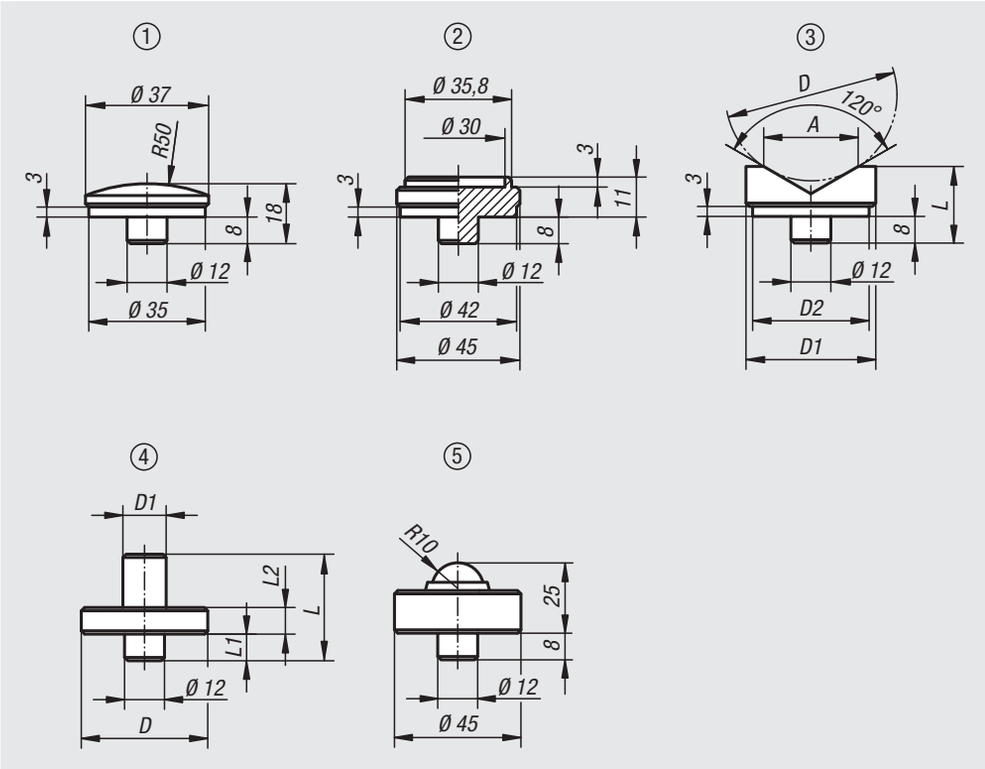

Material:
Carbon steel.

Version:
Tempered and black oxidised.
Ball hardened.

Sample order:
nlm 02210-021

Note:
Can be used with
02170
02180
02182
02190
02320
02330-020
02350-010

Drawing reference:
1) spherical
2) centring disc
3) prism
4) locating pin
5) revolving ball

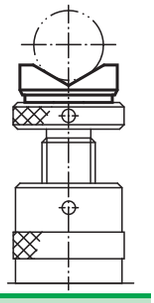

Order No.	Version
02210-01	spherical
02210-03	centring disc

Order No.	Version	D max.	D min.	D1	D2	L	A
02210-02	prism	50	10	45	42	23	32
02210-021	prism	100	22	65	62	38	56

Order No.	Version	D	D1	L	L1	L2
02210-04	locating pin	63	14	40	8	12
02210-041	locating pin	78	25	53	8	15

Order No.	Version	F max. kN
02210-05	revolving ball	30

Notes

02270

Step blocks

Material:
Carbon steel.

Version:
Painted

Sample order:
nlm 02270-02

Note:
For step block sets, see 02310.
Step blocks can also be used together with stepped-heel clamp straps 04070.

Vertical step height: 4.65 mm
Horizontal step height: 2.3 mm

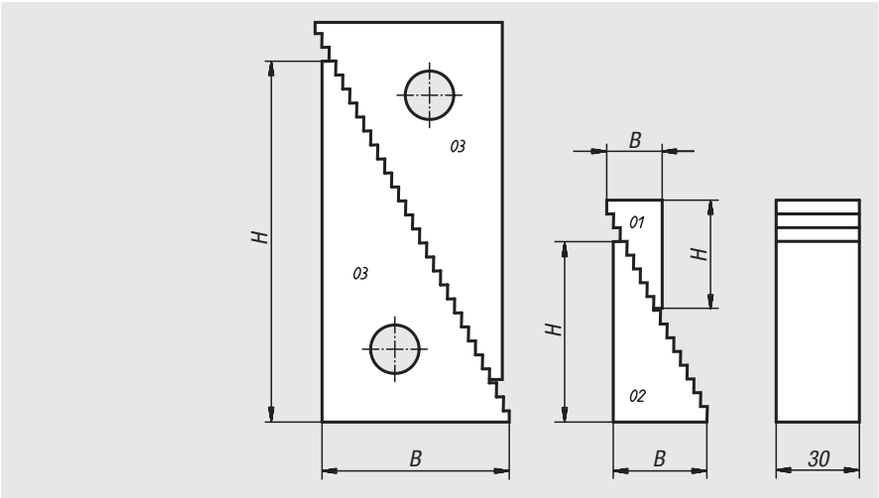

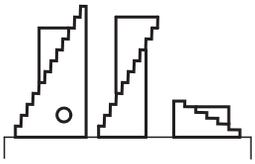

Order No.	B	H	Support height max.	Support height min.
02270-01	19	32	51	22
02270-02	35,5	65	107	39
02270-03	68	130	208	71

02310

Step block sets

Material:
Carbon steel.

Version:
Painted

Sample order:
nlm 02310-01

Note:
The special tooth form allow these blocks to be used vertically or horizontally. The complete set in a wooden box comprises 20 parts which are interchangeable and provide many possible uses. These blocks can also be ordered separately, see 02270. Step blocks can also be used together with stepped-heel clamp straps 04070.

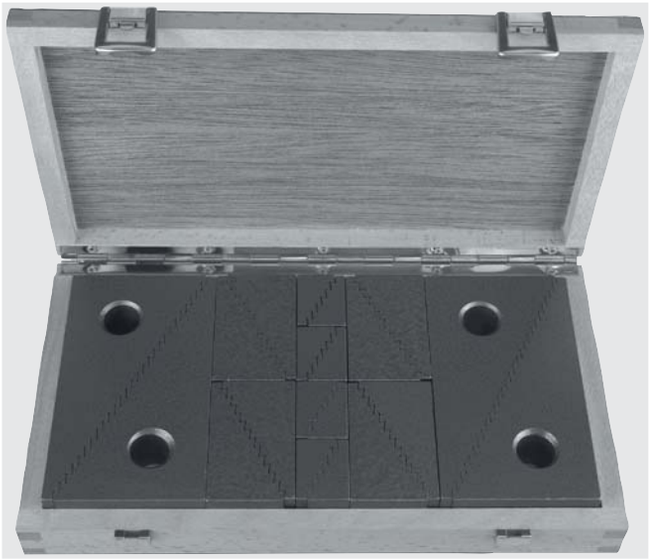

Order No.	Content	Support height mm	Box dimensions mm
02310-01	8x No. 01 8x No. 02 4x No. 03	from 22 to 208	280 x 155 x 40

Wedge supports

Material:
Carbon steel and ductile iron.

Version:
Tempered and black oxidised.
Wedge faces fine machined.

Sample order:
nlm 02320-50

Note:
Fine adjustments made using knurled screw or hexagon key. Vertical movement with no lateral shift. Particularly suited for marking out or machining heavy parts. A spherical insert 02210-01 is included with every support wedge.

Drawing reference:
1) centring hole for 02210

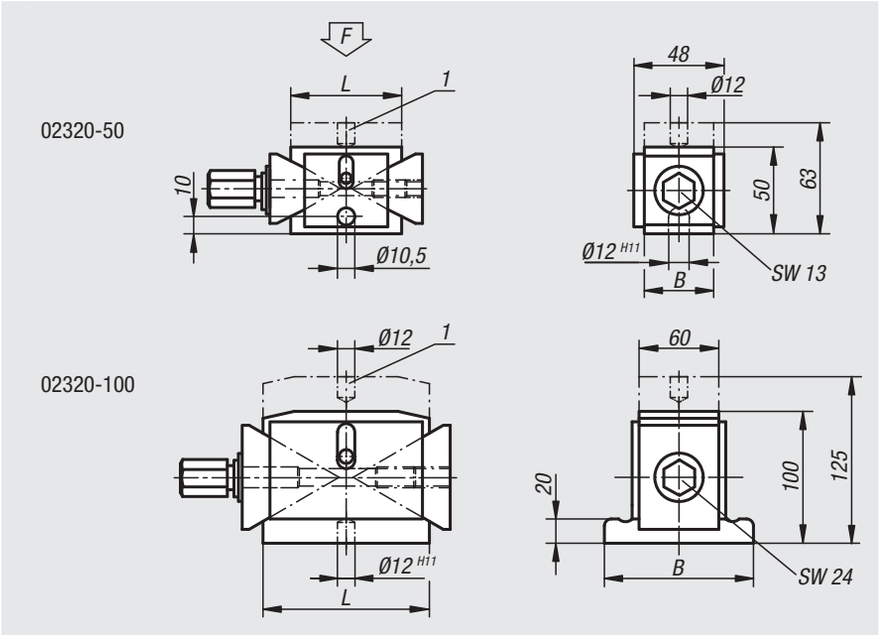

Order No.	Clamp range	L	B	travel per spindle rotation	F kN
02320-50	50 - 63	63	40	0,86	40
02320-100	100 - 125	125	115	1,16	100

Support elements cylindrical

Material:
Carbon steel
1.1181.

Version:
Black oxidised.

Sample order:
nlm 02330-040

Drawing reference:
1) centring hole for 02210
2) tapped hole for: 02000-110, 02000-310, 02000-910, 02030-10, 02030-101
3) spring force 0.8 - 2.1 N

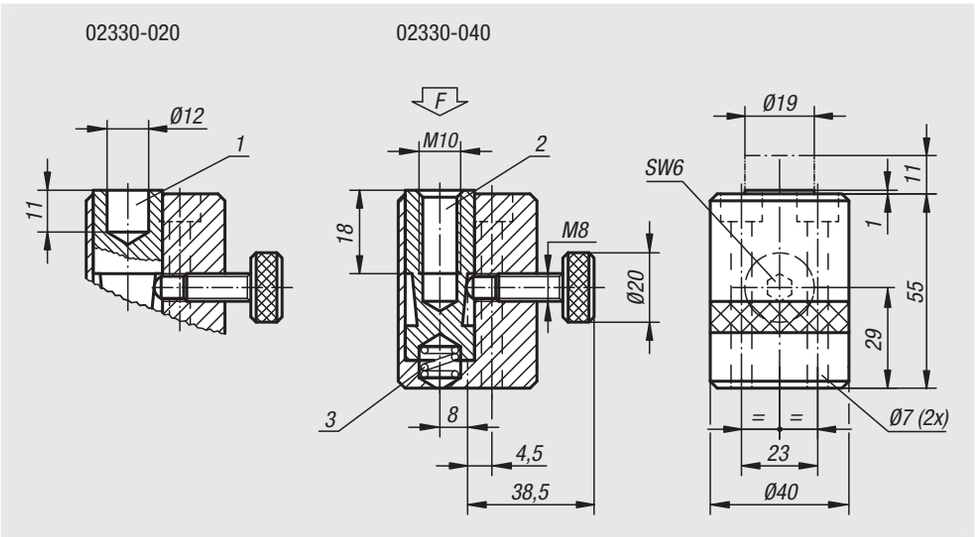

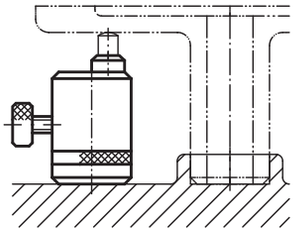

Order No.	F max. N
02330-020	4000
02330-040	4000

Workpiece supports

adjustable

Material:
Carbon steel.

Version:
Body black oxidised.
Rest pad hardened and black oxidised.

Sample order:
nlm 02333-08023

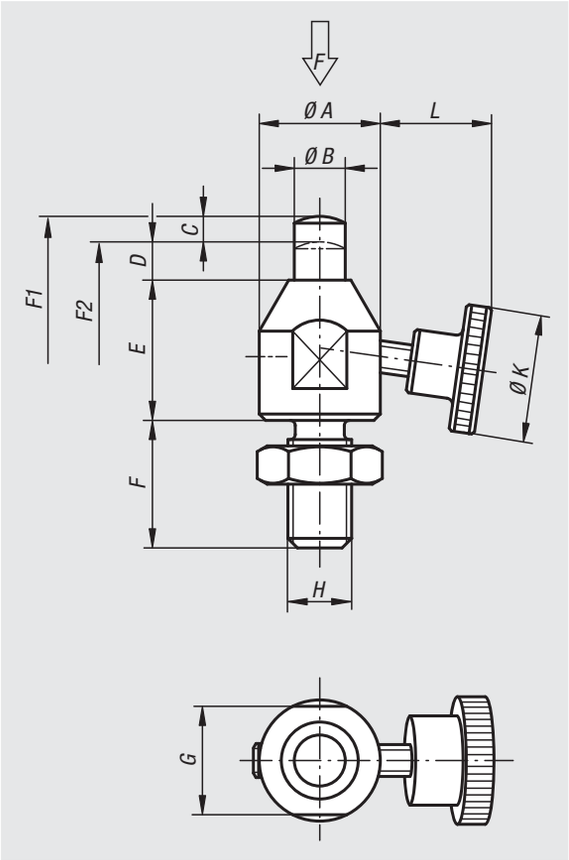

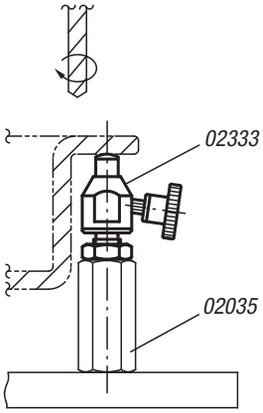

Order No.	A	B	C (travel)	D	E	F	G	H	K	L	F N	Spring force initial pressure F1 approx. N	Spring force final pressure F2 approx. N
02333-08023	15	6	3	5	18	16	13	M8	20	13,2	200	1,5	3
02333-10028	19	8	4	6	22	20	17	M10	25	16,3	300	1,8	3
02333-12031	22	10	4	6	25	24	19	M12	28	22,3	400	1,8	3

Workpiece supports

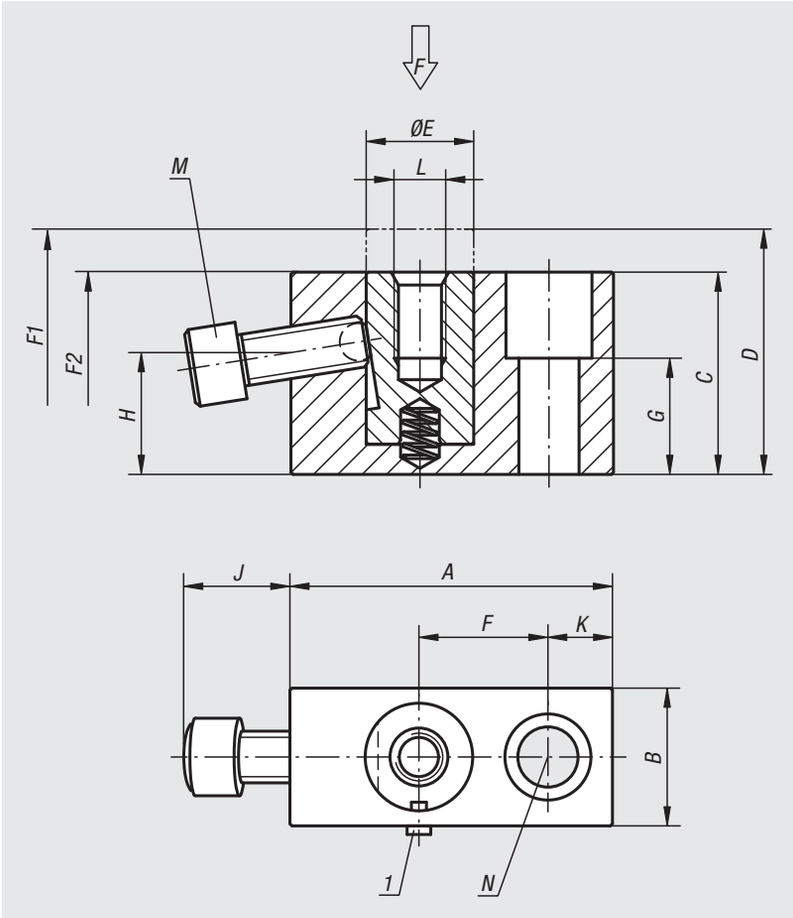

Material:
Carbon steel.

Version:
Body black oxidised.
Thrust pin tempered and black oxidised.

Sample order:
nlm 02334-06029

Drawing reference:
M = ball pressure screw
N = through hole for socket head screw DIN 912

1) rotation lock
2) screw rest
3) hexagonal nut

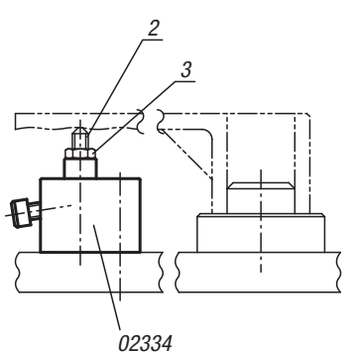

Order No.	A	B	C	D	E	F	G	H	J	K	L	M	N	F N	Spring force initial pressure F1 approx. N	Spring force final pressure F2 approx. N
02334-06029	38	19	29	35	12	15	15	17,6	13	8	M6x10	M6x16	M6	4000	0	6
02334-08037	50	22	37	47	16	20	20	21,1	16	10	M8x15	M8x20	M8	6000	0	7
02334-12047	75	32	47	57	25	30	27	28,3	25	15	M12x20	M12x30	M12	9000	1	11

Workpiece support cylinders

Material:
Carbon steel.

Version:
Body black oxidised.
Thrust pin hardened and black oxidised.

Sample order:
nlm 02335-06039

Drawing reference:
J = mounting screw
L = ball-end thrust screw
M = grub screw

1) screw rest
2) hexagonal nut
3) ball-end thrust screw

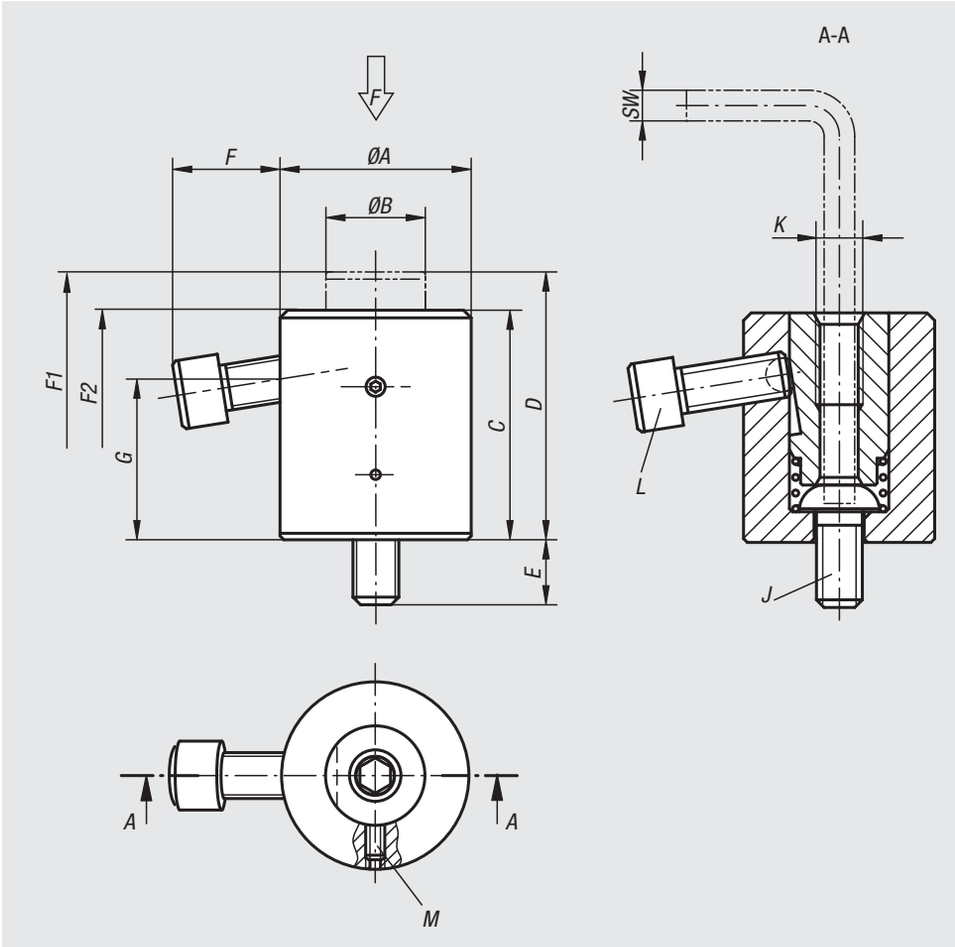

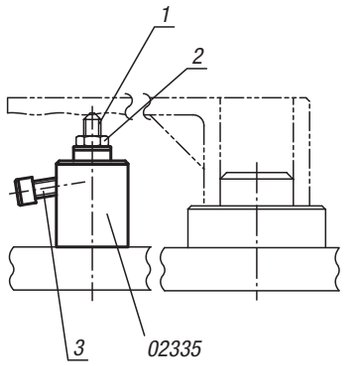

Order No.	A	B	C	D	E	F	G	J	K	L	M	SW	F N	Spring force initial pressure F1 approx. N	Spring force final pressure F2 approx. N
02335-06039	28	14	33	39	10	13,1	22,2	M6	M6x12	M6x16	M4x8	4	4000	10	22
02335-08052	35	19	42	52	14	17,2	27,5	M8	M8x16	M8x20	M4x8	5	6000	10	27
02335-12070	50	26	60	70	16	28,1	42,1	M12	M12x24	M12x30	M5x12	8	9000	15	30
02335-16080	60	33	70	80	22	26,6	47,4	M16	M16x32	M12x30	M5x15	10	9000	15	35

Support element

Material:
Main body hardened steel.
Housing aluminium.

Version:
Main body nitrated, manganese phosphated and ground.
Housing red anodized.

Sample order:
nlm 02340-0508

Note:
The support element is for supporting overhanging workpiece parts. It prevents vibration and bending during machining.

Method of operation:
1. Turn the cam screw (hex. socket SW 6) on the side of the housing, the support bolt will move out under light spring load until it makes contact with the workpiece.
2. Continue to turn to „lock“ position. The support bolt locks without changing position.
3. Turn the cam screw in the opposite direction and the support bolt will unlock. Continue turning to the „unlock“ position and the support bolt will slide back into the body.

Assembly:
Mount the support element to the fixture using the two M6 tapped holes.
Alternatively: Exchange the M12x10 plug screw for a M12x30 grub screw and mount the support directly onto the machine table with a T-nut.
For safe operation the M12 tapped hole must always be filled.
It is possible to countersink the support element by 16 mm.
Various rest pads can be mounted into the M8 tapped hole on the support bolt.
Supplied with M12x30 grub screw and M12 nut for T-slots (DIN 508).

Drawing reference:
1) grub screw M12x30 DIN 913 (exchangeable)
2) nut for T-slots M12x14 DIN 508

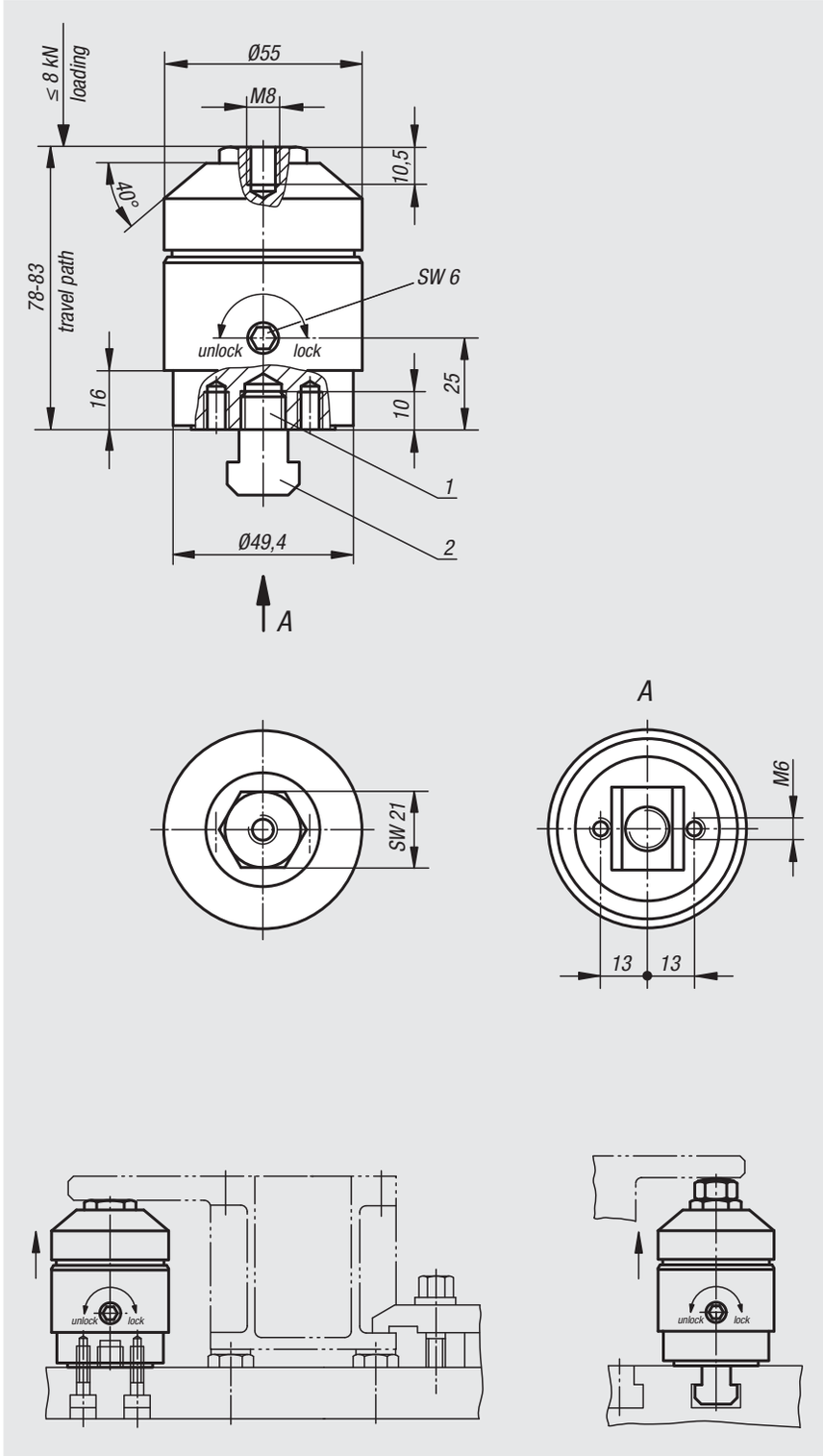

Order No.	Load capacity N	Travel path
02340-0508	8000	5 mm

02350

Rectangular support elements

Material:
Housing GJL 250, thrust pads and locking parts carbon steel.

Version:
Housing painted, steel parts black oxidised.

Sample order:
nlm 02350-030

Drawing reference:
1) centring hole for 02210
2) tapped hole for: 02000-110, 02000-310, 02000-910, 02030-10, 02030-101

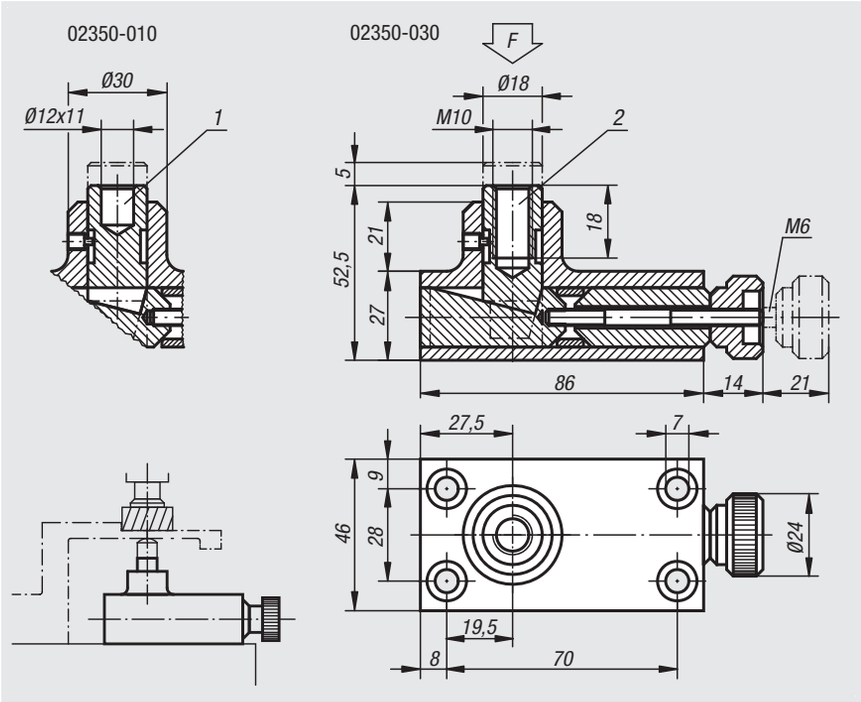

Order No.	F max. kN
02350-010	30
02350-030	30

02360

Workpiece supports

Material:
Steel.

Version:
Case-hardened, black oxidised and ground

Sample order:
nlm 02360-006

Note:
These supports are placed under long or thin workpieces to prevent vibration or bending during milling, drilling, grinding or shaping operations.

Drawing reference:
1) set screw

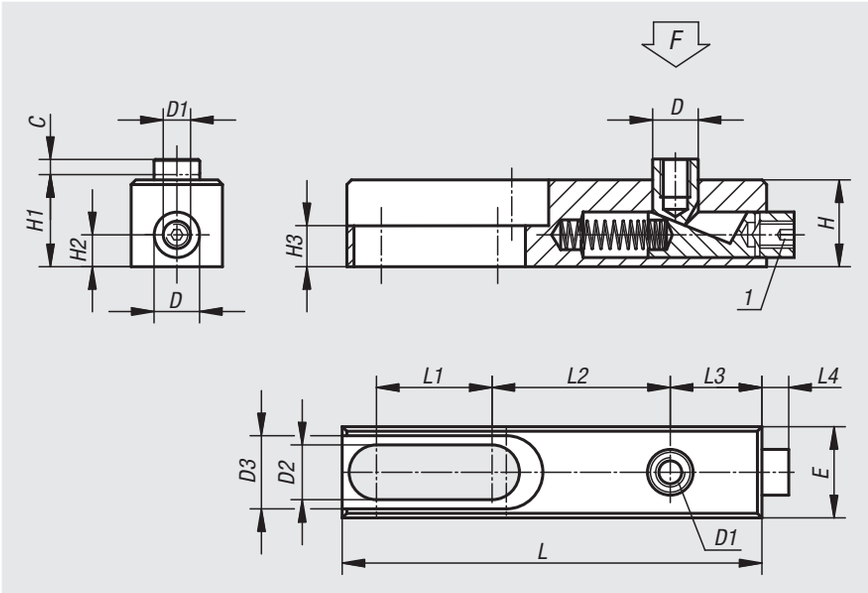

Order No.	C	D	D1	D2	D3	E	H	H1	H2	H3	L	L1	L2	L3	L4	F kN
02360-006	4	10	M6	8,2	16,2	20	19	19,5	7	9	92	25,5	39	20	6	3
02360-010	6	16	M10	12,5	24,4	30	30	31	10	10	149	44	61	32	11	15

Workpiece supports

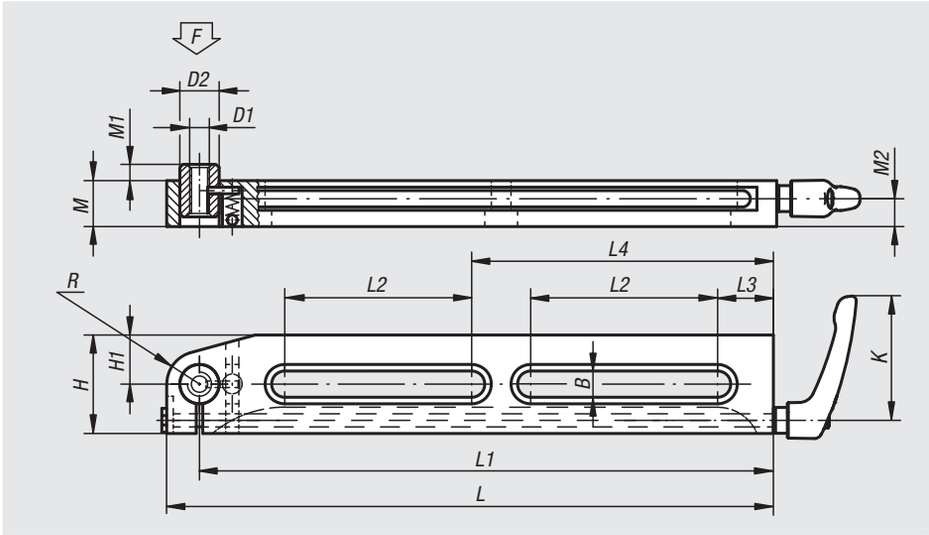

Material:
Steel.

Version:
Case-hardened, black oxidised and ground.

Sample order:
nlm 02380-150

Note:
These supports are placed under long or thin workpieces to prevent vibration or bending during milling, drilling, grinding or shaping operations. The support can be accurately placed without the need to reach under the workpiece. The support pin contacts the workpiece under light pressure. It can be tightened in any position. Various types of pins can be screwed into the tapped hole in the thrust pin to adapt the support height.

The supports 02380-075, 02380-150 and 02380-170 have only 1 slot.

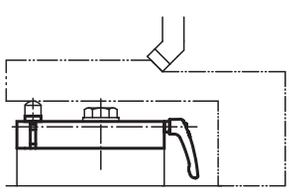

Order No.	K	L	L1	L2	L3	L4	B	H	H1	D1	D2	M	M1	M2	R	F N
02380-75	65	85	75	35	13	-	8,5	30	10	M8	13	19,5	3	11,5	-	500
02380-150	80	165	150	90	20	-	13	50	25	M10	20	24	6	14	15	2500
02380-170	110	190	170	100	25	-	17	60	20	M16	26	34	11	21,5	-	5000
02380-300	80	315	300	100	30	160	13	50	25	M10	20	24	6	14	15	2500

02385

Jack screws

Material:
Carbon steel.

Version:
Black oxidised.
Adjustment spindle tempered.

Sample order:
nlm 02385-16100

Note:
Use the inserts 02387 to adapt the contact face to requirements.

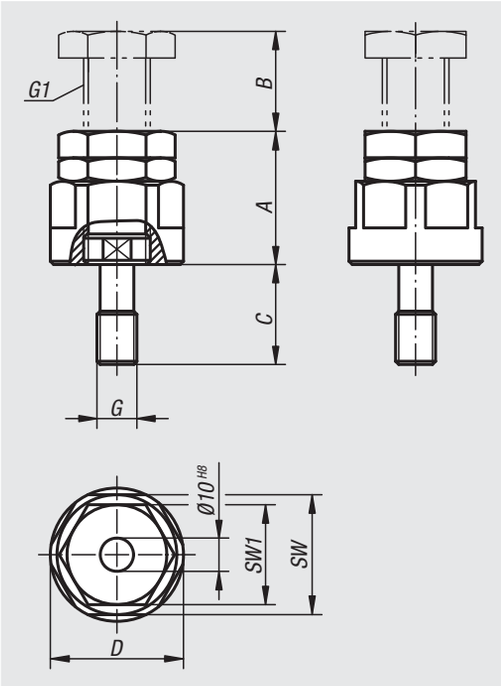

Order No.	A min.	B max.	C	D	SW	SW1	G	G1
02385-12040	40	10	30	40	36	30	M12	M20x1,5
02385-12050	50	20	30	40	36	30	M12	M20x1,5
02385-12070	70	40	30	40	36	30	M12	M20x1,5
02385-12100	100	50	30	50	46	36	M12	M24x2
02385-12150	150	100	30	50	46	36	M12	M24x2
02385-16040	40	10	30	40	36	30	M16	M20x1,5
02385-16050	50	20	30	40	36	30	M16	M20x1,5
02385-16070	70	40	30	40	36	30	M16	M20x1,5
02385-16100	100	50	30	50	46	36	M16	M24x2
02385-16150	150	100	30	50	46	36	M16	M24x2

02387

Inserts

Material:
Carbon steel.

Version:
Tempered to 1100-1200 N/mm², black oxidised.

Sample order:
nlm 02387-02

Drawing reference:
1) rounded insert
2) cone insert
3) prism insert

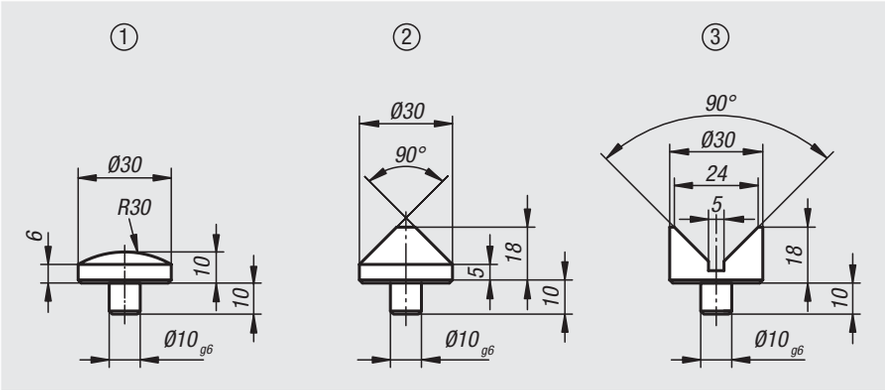

Order No.	Version
02387-01	rounded insert
02387-02	cone insert
02387-03	prism insert

Jack screws extended

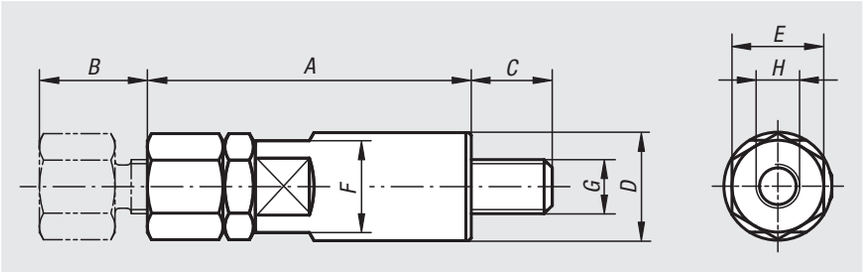

Material:
Carbon steel.

Version:
Black oxidised.

Sample order:
nlm 02388-08040

Drawing reference:
1) screw rest
2) jack screw

Jack screw for mounting various rests

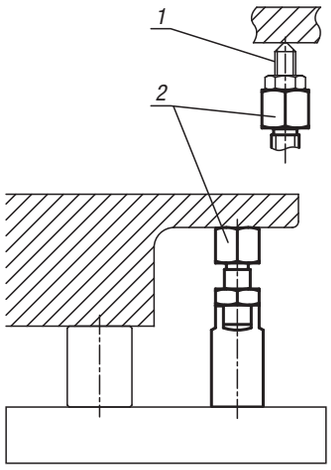

Order No.	A	B	C	D	E	F	G	H
02388-08040	40	10	12	16	13	13	M8	M6x6
02388-08050	50	20	12	16	13	13	M8	M6x6
02388-10050	50	10	14	20	17	17	M10	M8x8
02388-10060	60	20	14	20	17	17	M10	M8x8
02388-12065	65	15	19	24	22	22	M12	M10x10
02388-12080	80	30	19	24	22	22	M12	M10x10
02388-16080	80	15	24	32	27	27	M16	M12x12
02388-16095	95	30	24	32	27	27	M16	M12x12

Eccentric supports

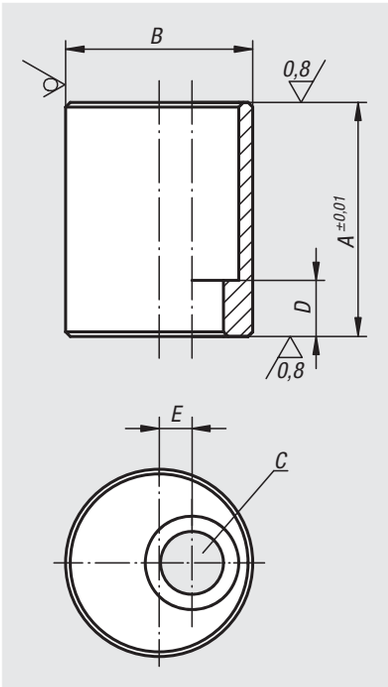

Material:
Special steel alloy.

Version:
Tempered, black oxidised.
Contact faces ground.

Sample order:
nlm 02390-10040

Order No.	A	B	C hole for DIN 912 cap screw	D	E
02390-08016	16	25	M8	7	3,5
02390-08020	20	25	M8	7	3,5
02390-08025	25	25	M8	7	3,5
02390-08032	32	25	M8	7	3,5
02390-08040	40	25	M8	7	3,5
02390-08050	50	25	M8	7	3,5
02390-10020	20	32	M10	9	5
02390-10025	25	32	M10	9	5
02390-10032	32	32	M10	9	5
02390-10040	40	32	M10	9	5
02390-10050	50	32	M10	9	5
02390-10063	63	32	M10	9	5
02390-12020	20	40	M12	7	7
02390-12025	25	40	M12	12	7
02390-12032	32	40	M12	12	7
02390-12040	40	40	M12	12	7
02390-12050	50	40	M12	12	7
02390-12063	63	40	M12	12	7
02390-12080	80	40	M12	22	7
02390-12100	100	40	M12	22	7
02390-12125	125	40	M12	22	7
02390-16025	25	50	M16	8	10
02390-16032	32	50	M16	15	10
02390-16040	40	50	M16	15	10
02390-16050	50	50	M16	15	10
02390-16063	63	50	M16	15	10
02390-16080	80	50	M16	35	10
02390-16100	100	50	M16	35	10
02390-16125	125	50	M16	35	10

03000

Spring plungers
Indexing plungers
Stops
Centring/positioning components
Ball lock pins
T-slot nuts

Spring plungers with LONG-LOK thread lock

LONG-LOK, the most advanced thread locking mechanism

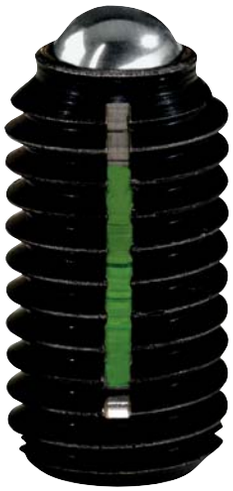

With the following crucial advantages:

1. Vibration resistant.

The integrated LONG-LOK thread lock secures spring plungers rationally and economically. No loosening or falling out after impacts, knocks or vibrations.

2. Extremly high loosening torque.

The elastic nylon insert is squeezed like a wedge between the internal and external threads. The nylon locking system pushes the play between the threads to one side causing surface pressure on the thread flanks. The resulting loosening torque is higher than that by most conventional mechanical methods.

3. Secure in every position.

The LONG-LOK thread lock requires neither initial tension nor any defined position. This is ideal for the positioning of the spring plungers.

4. Saves assembly time and stocking space.

The LONG-LOK thread lock is integrated into spring plungers. There are no additional components. No circlips, no spring washers, no locking nuts. As a result, assembly and stocking costs are reduced considerably.

5. For repeated use.

When using the LONG-LOK thread lock for the first time, it requires a slightly higher screw-in torque. After third or fourth use, the last reached value remains nearly constant.

6. Problem solver from M3 to M16.

Light-weight or heavy-weight: name your requirements! We will supply you with the suitable spring plungers with integrated LONG-LOK thread lock.

Spring plungers

with slot and ball, steel

handle indexing

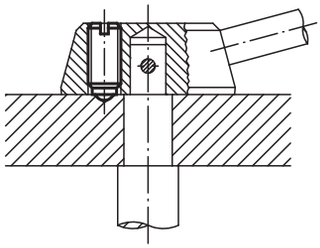

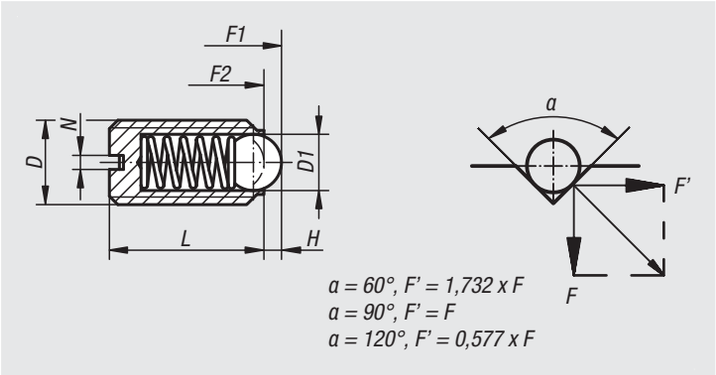

Material:
Sleeve steel grade 5.8.
Ball steel.
Spring steel grade D.

Version:
Black oxidised. Ball hardened.

Sample order:
nlm 03000-203

Spring plungers with slot and ball, standard spring

Order No.	D	D1	L	H	N	Spring force initial pressure F1 approx. N	Spring force final pressure F2 approx. N
03000-03	M3	1,5	7	0,4	0,4	1,5	3
03000-04	M4	2,5	9	0,8	0,6	4	10
03000-05	M5	3	12	0,9	0,8	6	11
03000-06	M6	3,5	14	1	1	9	13
03000-08	M8	5	16	1,5	1,2	15	30
03000-10	M10	6	19	2	1,6	20	35
03000-12	M12	8	22	2,5	2	30	55
03000-16	M16	10	24	3,5	2,5	65	125
03000-20	M20	12	30	4,5	2,5	80	160

Spring plungers with slot and ball, reinforced spring

Order No.	D	D1	L	H	N	Spring force initial pressure F1 approx. N	Spring force final pressure F2 approx. N
03000-203	M3	1,5	7	0,4	0,4	5	7
03000-204	M4	2,5	9	0,8	0,6	12	22
03000-205	M5	3	12	0,9	0,8	19	30
03000-206	M6	3,5	14	1	1	28	40
03000-208	M8	5	16	1,5	1,2	47	73
03000-210	M10	6	19	2	1,6	66	100
03000-212	M12	8	22	2,5	2	66	120
03000-216	M16	10	24	3,5	2,5	90	180
03000-220	M20	12	30	4,5	2,5	115	240

Spring plungers with slot and ball, long version, standard spring

Order No.	D	D1	L	H	N	Spring force initial pressure F1 approx. N	Spring force final pressure F2 approx. N
03000-404	M4	2,5	16	0,8	0,6	4	10
03000-405	M5	3	20	0,9	0,8	6	11
03000-406	M6	3,5	25	1	1	9	13
03000-408	M8	5	30	1,5	1,2	15	30
03000-410	M10	6	35	2	1,6	20	35
03000-412	M12	8	40	2,5	2	30	55
03000-416	M16	10	45	3,5	2,5	65	125

Spring plungers

with slot and ball, LONG-LOK secured, steel

Material:
Sleeve steel grade 5.8.
Ball steel.
Spring steel grade D.

LONG-LOK thread lock nylon.

Version:
Black oxidised. Ball hardened.

Sample order:
nlm 03001-12

Drawing reference:
L2 = approx. 2x thread pitch

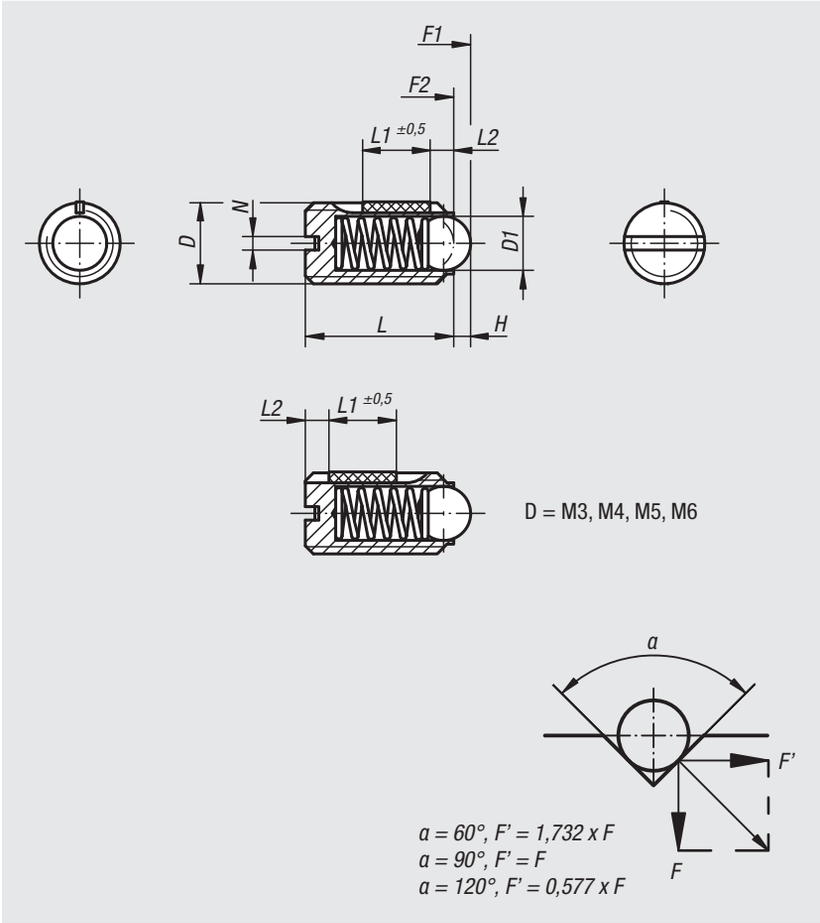

Spring plungers with slot and ball, standard spring, LONG-LOK secured

Order No.	D	D1	L	L1	H	N	Spring force initial pressure F1 approx. N	Spring force final pressure F2 approx. N	Tightening torque approx. Nm	Loosening torque approx. Nm
03001-03	M3	1,5	7	4	0,4	0,4	1,5	3	0,1	0,07
03001-04	M4	2,5	9	5	0,8	0,6	4	10	0,18	0,12
03001-05	M5	3	12	6	0,9	0,8	6	11	0,12	0,08
03001-06	M6	3,5	14	7	1	1	9	13	0,43	0,21
03001-08	M8	5	16	8	1,5	1,2	15	30	1,09	0,37
03001-10	M10	6	19	9	2	1,6	20	35	1,36	0,62
03001-12	M12	8	22	10	2,5	2	30	55	2,03	1,36
03001-16	M16	10	24	14	3,5	2,5	65	125	3,95	2,95

Spring plungers with slot and ball, reinforced spring, LONG-LOK secured

Order No.	D	D1	L	L1	H	N	Spring force initial pressure F1 approx. N	Spring force final pressure F2 approx. N	Tightening torque approx. Nm	Loosening torque approx. Nm
03001-203	M3	1,5	7	4	0,4	0,4	5	7	0,1	0,07
03001-204	M4	2,5	9	5	0,8	0,6	12	22	0,18	0,12
03001-205	M5	3	12	6	0,9	0,8	19	30	0,12	0,08
03001-206	M6	3,5	14	7	1	1	28	40	0,43	0,21
03001-208	M8	5	16	8	1,5	1,2	47	73	1,09	0,37
03001-210	M10	6	19	9	2	1,6	66	100	1,36	0,62
03001-212	M12	8	22	10	2,5	2	66	120	2,03	1,36
03001-216	M16	10	24	14	3,5	2,5	90	180	3,95	2,95

03004

Spring plungers

with slot and POM ball

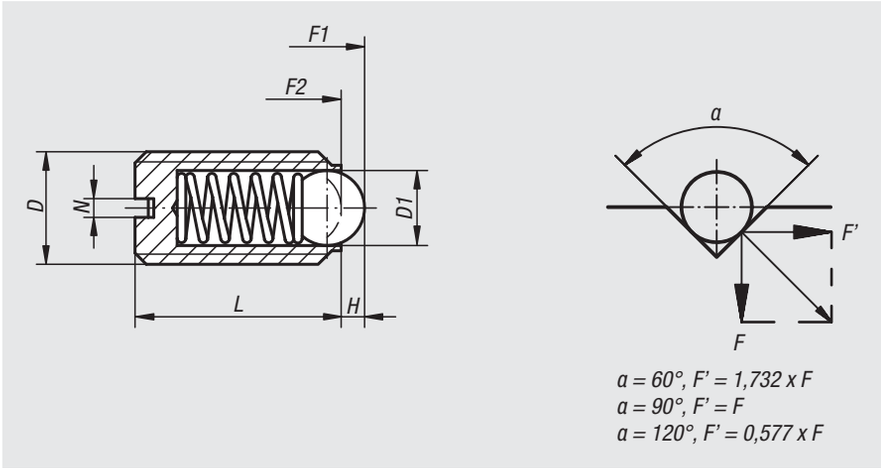

Material:
Sleeve, plastic.
Ball POM.
Spring 1.4310.

Version:
Ball, white.

Sample order:
nlm 03004-10

Note:
Spring plungers are used for indexing and positioning.
They can also be used as ejectors.

Order No.	D	D1	L	H	N	Spring force initial pressure F1 approx. N	Spring force final pressure F2 approx. N
03004-06	M6	3,5	14	1	1	9	13
03004-08	M8	5	16	1,5	1,2	15	30
03004-10	M10	6	19	2	1,6	20	40

03008

Spring plungers

with slot and ceramic ball, stainless steel

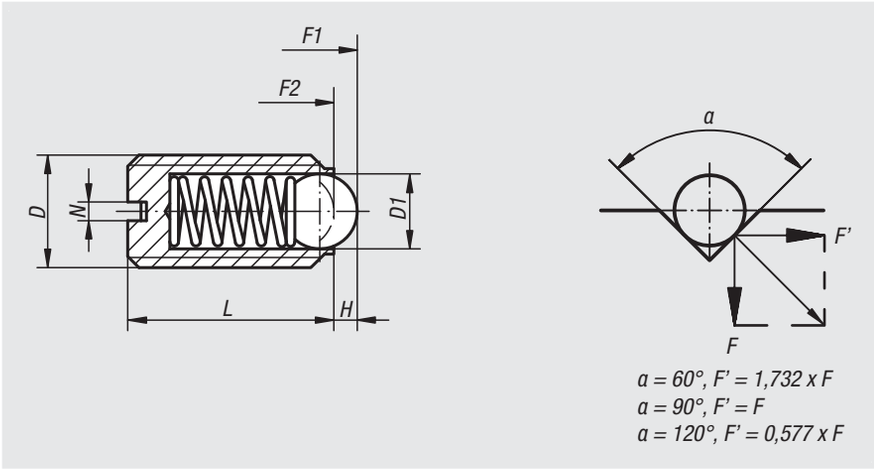

Material:
Sleeve 1.4305.
Ceramic ball Si_3N_4.
Spring 1.4310.

Version:
Bright.

Sample order:
nlm 03008-05

Note:
The combination of excellent material properties is a special feature of silicon nitride (Si_3N_4). These include for example high resiliance and stability, excellent wear properties and good chemical resistance.

Order No.	D	D1	L	H	N	Spring force initial pressure F1 approx. N	Spring force final pressure F2 approx. N
03008-05	M5	3	12	0,9	0,8	6	11
03008-06	M6	3,5	14	1	1	9	13
03008-08	M8	5	16	1,5	1,2	15	30
03008-10	M10	6	19	2	1,6	20	35
03008-12	M12	8	22	2,5	2	30	55
03008-16	M16	10	24	3,5	2,5	65	125

Spring plungers

with slot and ball, stainless steel

Material:
Sleeve 1.4305.
Ball 1.4034.
Spring 1.4310.

Version:
Bright. Ball hardened.

Sample order:
nlm 03010-203

handle indexing

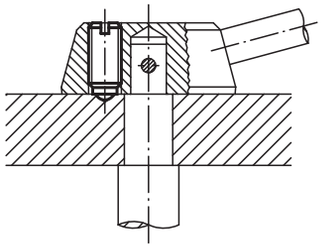

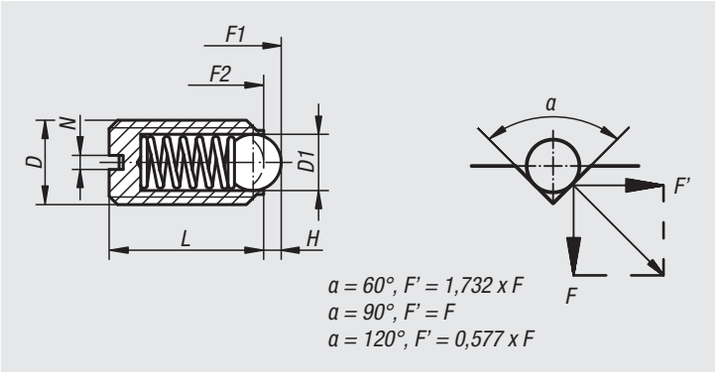

Spring plungers with slot and ball, standard spring

Order No.	D	D1	L	H	N	Spring force initial pressure F1 approx. N	Spring force final pressure F2 approx. N
03010-03	M3	1,5	7	0,4	0,4	1,5	3
03010-04	M4	2,5	9	0,8	0,6	4	10
03010-05	M5	3	12	0,9	0,8	6	11
03010-06	M6	3,5	14	1	1	9	13
03010-08	M8	5	16	1,5	1,2	15	30
03010-10	M10	6	19	2	1,6	20	35
03010-12	M12	8	22	2,5	2	30	55
03010-16	M16	10	24	3,5	2,5	65	125
03010-20	M20	12	30	4,5	2,5	80	160

Spring plungers with slot and ball, reinforced spring

Order No.	D	D1	L	H	N	Spring force initial pressure F1 approx. N	Spring force final pressure F2 approx. N
03010-203	M3	1,5	7	0,4	0,4	5	7
03010-204	M4	2,5	9	0,8	0,6	12	22
03010-205	M5	3	12	0,9	0,8	19	30
03010-206	M6	3,5	14	1	1	28	40
03010-208	M8	5	16	1,5	1,2	47	73
03010-210	M10	6	19	2	1,6	66	100
03010-212	M12	8	22	2,5	2	66	120
03010-216	M16	10	24	3,5	2,5	90	180
03010-220	M20	12	30	4,5	2,5	115	240

Spring plungers with slot and ball, long version, standard spring

Order No.	D	D1	L	H	N	Spring force initial pressure F1 approx. N	Spring force final pressure F2 approx. N
03010-404	M4	2,5	16	0,8	0,6	4	10
03010-405	M5	3	20	0,9	0,8	6	11
03010-406	M6	3,5	25	1	1	9	13
03010-408	M8	5	30	1,5	1,2	15	30
03010-410	M10	6	35	2	1,6	20	35
03010-412	M12	8	40	2,5	2	30	55
03010-416	M16	10	45	3,5	2,5	65	125

Spring plungers

with slot and ball, LONG-LOK secured, stainless steel

Material:
Sleeve 1.4305.
Ball 1.4034.
Spring 1.4310.

LONG-LOK thread lock in nylon.

Version:
Bright. Ball hardened.

Sample order:
nlm 03011-12

Drawing reference:
L2 = approx. 2x thread pitch

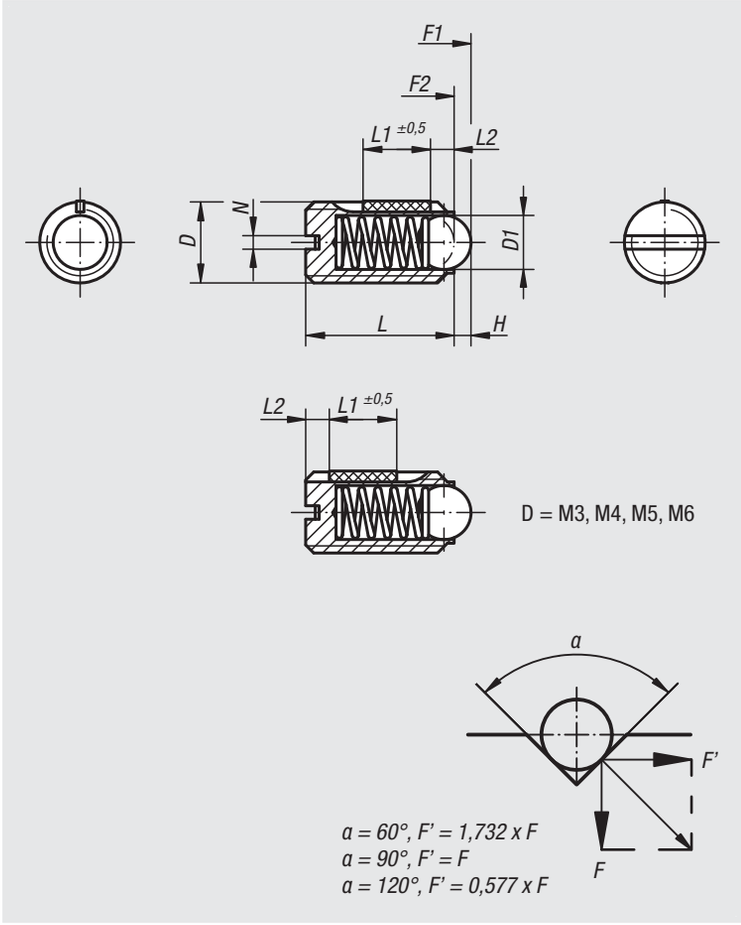

Spring plungers with slot and ball, standard spring, LONG-LOK secured

Order No.	D	D1	L	L1	H	N	Spring force initial pressure F1 approx. N	Spring force final pressure F2 approx. N	Tightening torque approx. Nm	Loosening torque approx. Nm
03011-03	M3	1,5	7	4	0,4	0,4	1,5	3	0,1	0,07
03011-04	M4	2,5	9	5	0,8	0,6	4	10	0,18	0,12
03011-05	M5	3	12	6	0,9	0,8	6	11	0,12	0,08
03011-06	M6	3,5	14	7	1	1	9	13	0,43	0,21
03011-08	M8	5	16	8	1,5	1,2	15	30	1,09	0,37
03011-10	M10	6	19	9	2	1,6	20	35	1,36	0,62
03011-12	M12	8	22	10	2,5	2	30	55	2,03	1,36
03011-16	M16	10	24	14	3,5	2,5	65	125	3,95	2,95

Spring plungers with slot and ball, reinforced spring, LONG-LOK secured

Order No.	D	D1	L	L1	H	N	Spring force initial pressure F1 approx. N	Spring force final pressure F2 approx. N	Tightening torque approx. Nm	Loosening torque approx. Nm
03011-203	M3	1,5	7	4	0,4	0,4	5	7	0,1	0,07
03011-204	M4	2,5	9	5	0,8	0,6	12	22	0,18	0,12
03011-205	M5	3	12	6	0,9	0,8	19	30	0,12	0,08
03011-206	M6	3,5	14	7	1	1	28	40	0,43	0,21
03011-208	M8	5	16	8	1,5	1,2	47	73	1,09	0,37
03011-210	M10	6	19	9	2	1,6	66	100	1,36	0,62
03011-212	M12	8	22	10	2,5	2	66	120	2,03	1,36
03011-216	M16	10	24	14	3,5	2,5	90	180	3,95	2,95

Spring plungers

plastic, with slot and stainless steel ball

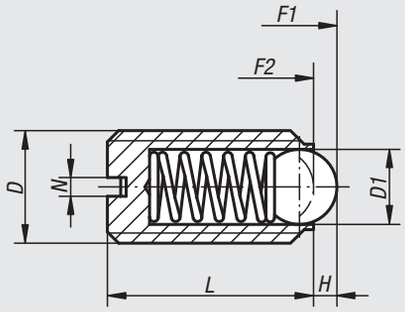

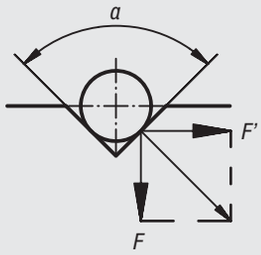

α = 60°, F' = 1,732 x F
α = 90°, F' = F
α = 120°, F' = 0,577 x F

Material:
Sleeve plastic.
Ball stainless steel 1.4034.
Spring 1.4310.

Version:
Ball, hardened.

Sample order:
nlm 03014-10

Note:
Spring plungers are used for indexing and positioning. They can also be used as ejectors.

Order No.	D	D1	L	H	N	Spring force initial pressure F1 approx. N	Spring force final pressure F2 approx. N
03014-06	M6	3,5	14	1	1	9	13
03014-08	M8	5	16	1,5	1,2	15	30
03014-10	M10	6	19	2	1,6	20	40

Spring plungers

with slot and thrust pin, steel

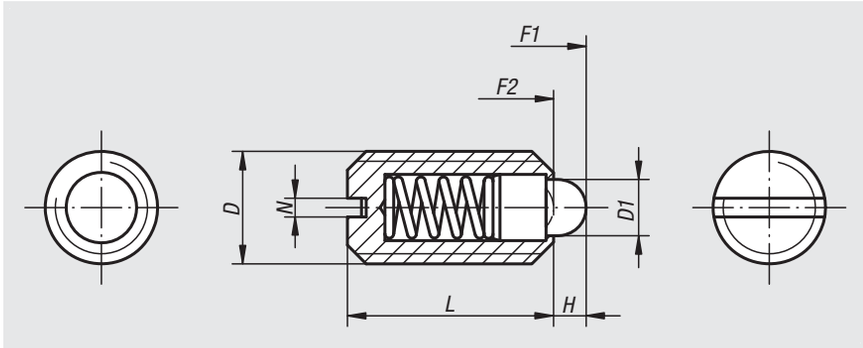

Material:
Sleeve steel grade 5.8.
Thrust pin steel.
Spring steel grade D.

Version:
Black oxidised.
Thrust pin hardened.

Sample order:
nlm 03020-10

Spring plungers with slot and thrust pin, standard spring force

Order No.	D	D1	L	H	N	Spring force initial pressure F1 approx. N	Spring force final pressure F2 approx. N
03020-04	M4	1,8	9	1,5	0,6	6	20
03020-05	M5	2,4	12	2	0,8	6	20
03020-06	M6	2,7	14	2	1	7	20
03020-08	M8	4	16	2	1,2	15	30
03020-10	M10	4,5	19	2,5	1,6	20	35
03020-12	M12	6	22	3,5	2	30	55
03020-16	M16	8,5	24	4,5	2,5	45	100
03020-20	M20	10	30	6,5	2,5	60	120

Spring plungers with slot and thrust pin, light spring force

Order No.	D	D1	L	H	N	Spring force initial pressure F1 approx. N	Spring force final pressure F2 approx. N
03020-104	M4	1,8	9	1,5	0,6	3	10
03020-105	M5	2,4	12	2	0,8	3	10
03020-106	M6	2,7	14	2	1	4	10
03020-108	M8	4	16	2	1,2	7	15
03020-110	M10	4,5	19	2,5	1,6	9	16
03020-112	M12	6	22	3,5	2	14	26
03020-116	M16	8,5	24	4,5	2,5	22	50
03020-120	M20	10	30	6,5	2,5	30	60

Spring plungers with slot and thrust pin, reinforced spring force

Order No.	D	D1	L	H	N	Spring force initial pressure F1 approx. N	Spring force final pressure F2 approx. N
03020-205	M5	2,4	12	2	0,8	9	25
03020-206	M6	2,7	14	2	1	11	25
03020-208	M8	4	16	2	1,2	22	43
03020-210	M10	4,5	19	2,5	1,6	20	54
03020-212	M12	6	22	3,5	2	36	94
03020-216	M16	8,5	24	4,5	2,5	60	110

Spring plungers

with end position feedback

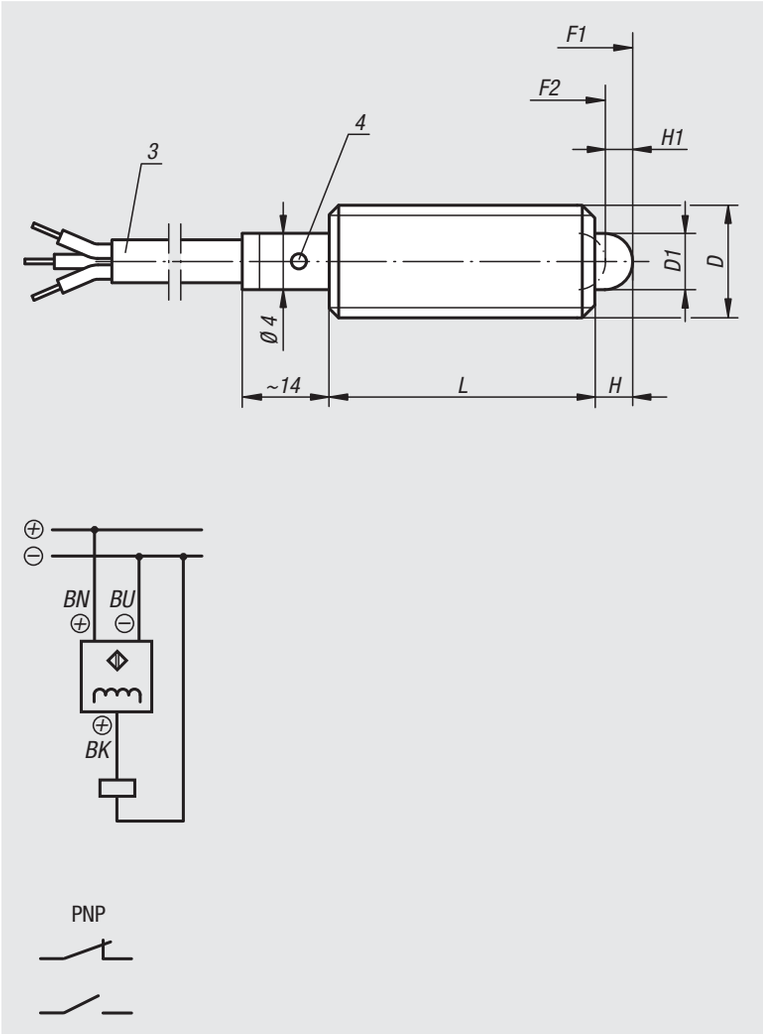

Material:
Sleeve, thrust pin and spring steel.
Inductive proximity switch.

Version:
Black oxidised.
Thrust pin hardened.

Sample order:
nlm 03020-5081

Note:
An electrical control signal can be sent via the built-in end switch.
Voltage: U = 10 – 30 V DC
Current: I max. = 200 mA
Temperature range: -25 °C – +70 °C
Protection class: IP 67

Safety:
Spring plungers with end position feedback are not suitable for personal protection.

Drawing reference:
3) cable Ø 3.5 mm; length ca. 2 m
4) LED-indicator

BN = brown
BK = black
BU = blue

Example of position feedback:
Pos. 1: slide engaged
Pos. 2: slide disengaged

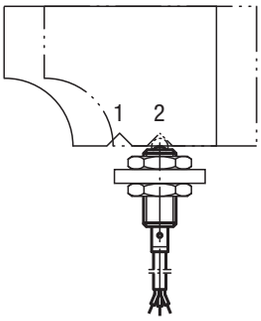

Order No.	Type	D	D1	L	H	H1	Switching contact from stroke H1	Spring force initial pressure F1 approx. N	Spring force final pressure F2 approx. N
03020-5061	normally closed	M6	2,7	27	3	2	1,2 - 1,6	7	20
03020-5081	normally closed	M8	4	29	3	2	1,2 - 1,8	15	30
03020-5101	normally closed	M10	4,5	36	4	3	2,2 - 2,8	26	44
03020-5062	normally open	M6	2,7	27	3	2	1,2 - 1,6	7	20
03020-5082	normally open	M8	4	29	3	2	1,2 - 1,8	15	30
03020-5102	normally open	M10	4,5	36	4	3	2,2 - 2,8	26	44

Spring plungers

with slot and thrust pin, LONG-LOK secured, steel

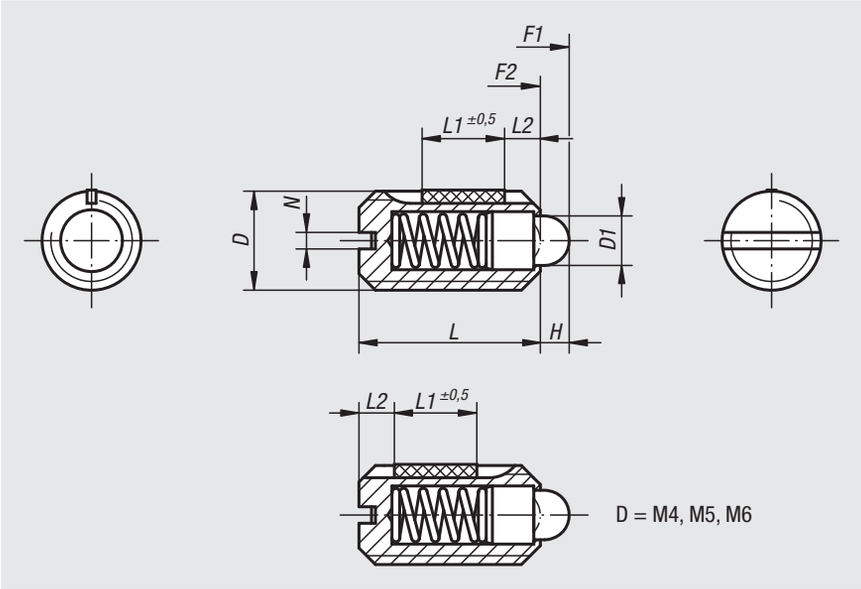

Material:
Sleeve steel grade 5.8.
Thrust pin steel.
Spring steel grade D.

LONG-LOK thread lock nylon.

Version:
Black oxidised.
Thrust pin hardened.

Sample order:
nlm 03021-10

Drawing reference:
L2 = approx. 2x thread pitch

Spring plungers with slot and thrust pin, standard spring force, LONG-LOK secured

Order No.	D	D1	L	L1	H	N	Spring force initial pressure F1 approx. N	Spring force final pressure F2 approx. N	Tightening torque approx. Nm	Loosening torque approx. Nm
03021-04	M4	1,8	9	5	1,5	0,6	6	20	0,18	0,12
03021-05	M5	2,4	12	6	2	0,8	6	20	0,12	0,08
03021-06	M6	2,7	14	7	2	1	7	20	0,44	0,21
03021-08	M8	4	16	8	2	1,2	15	30	1,1	0,38
03021-10	M10	4,5	19	9	2,5	1,6	20	35	1,36	0,62
03021-12	M12	6	22	10	3,5	2	30	55	2,11	1,41
03021-16	M16	8,5	24	14	4,5	2,5	45	100	3,95	3,05

Spring plungers with slot and thrust pin, light spring force, LONG-LOK secured

Order No.	D	D1	L	L1	H	N	Spring force initial pressure F1 approx. N	Spring force final pressure F2 approx. N	Tightening torque approx. Nm	Loosening torque approx. Nm
03021-104	M4	1,8	9	5	1,5	0,6	3	10	0,18	0,12
03021-105	M5	2,4	12	6	2	0,8	3	10	0,12	0,08
03021-106	M6	2,7	14	7	2	1	4	10	0,44	0,21
03021-108	M8	4	16	8	2	1,2	7	15	1,1	0,38
03021-110	M10	4,5	19	9	2,5	1,6	9	16	1,36	0,62
03021-112	M12	6	22	10	3,5	2	14	26	2,11	1,41
03021-116	M16	8,5	24	14	4,5	2,5	22	50	3,95	3,05

Spring plungers with slot and thrust pin, reinforced spring force, LONG-LOK secured

Order No.	D	D1	L	L1	H	N	Spring force initial pressure F1 approx. N	Spring force final pressure F2 approx. N	Tightening torque approx. Nm	Loosening torque approx. Nm
03021-205	M5	2,4	12	6	2	0,8	9	25	0,12	0,08
03021-206	M6	2,7	14	7	2	1	11	25	0,44	0,21
03021-208	M8	4	16	8	2	1,2	22	43	1,1	0,38
03021-210	M10	4,5	19	9	2,5	1,6	20	54	1,36	0,62
03021-212	M12	6	22	10	3,5	2	36	94	2,11	1,41
03021-216	M16	8,5	24	14	4,5	2,5	60	110	3,99	3,05

Spring plungers

with slot and thrust pin, stainless steel

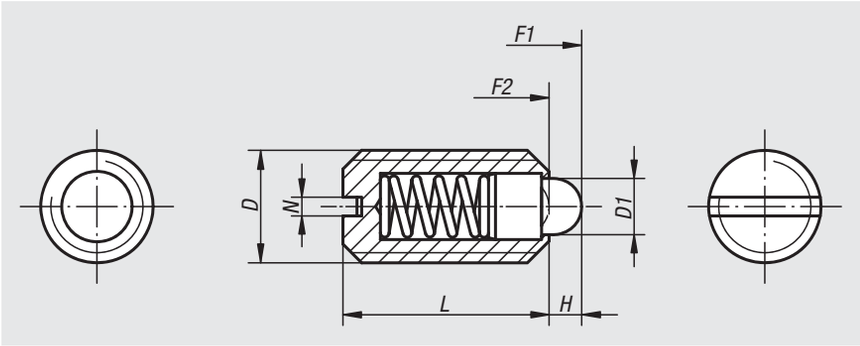

Material:
Sleeve 1.4305.
Thrust pin 1.4034.
Spring 1.4310.

Version:
Bright.
Thrust pin hardened.

Sample order:
nlm 03025-10

Spring plungers with slot and thrust pin, standard spring force

Order No.	D	D1	L	H	N	Spring force initial pressure F1 approx. N	Spring force final pressure F2 approx. N
03025-04	M4	1,8	9	1,5	0,6	6	20
03025-05	M5	2,4	12	2	0,8	6	20
03025-06	M6	2,7	14	2	1	7	20
03025-08	M8	4	16	2	1,2	15	30
03025-10	M10	4,5	19	2,5	1,6	20	35
03025-12	M12	6	22	3,5	2	30	55
03025-16	M16	8,5	24	4,5	2,5	45	100
03025-20	M20	10	30	6,5	2,5	60	120

Spring plungers with slot and thrust pin, light spring force

Order No.	D	D1	L	H	N	Spring force initial pressure F1 approx. N	Spring force final pressure F2 approx. N
03025-104	M4	1,8	9	1,5	0,6	3	10
03025-105	M5	2,4	12	2	0,8	3	10
03025-106	M6	2,7	14	2	1	4	10
03025-108	M8	4	16	2	1,2	7	15
03025-110	M10	4,5	19	2,5	1,6	9	16
03025-112	M12	6	22	3,5	2	14	26
03025-116	M16	8,5	24	4,5	2,5	22	50
03025-120	M20	10	30	6,5	2,5	30	60

Spring plungers with slot and thrust pin, reinforced spring force

Order No.	D	D1	L	H	N	Spring force initial pressure F1 approx. N	Spring force final pressure F2 approx. N
03025-205	M5	2,4	12	2	0,8	9	25
03025-206	M6	2,7	14	2	1	11	25
03025-208	M8	4	16	2	1,2	22	43
03025-210	M10	4,5	19	2,5	1,6	20	54
03025-212	M12	6	22	3,5	2	36	94
03025-216	M16	8,5	24	4,5	2,5	60	110

Spring plungers

with slot and thrust pin, LONG-LOK secured, stainless steel

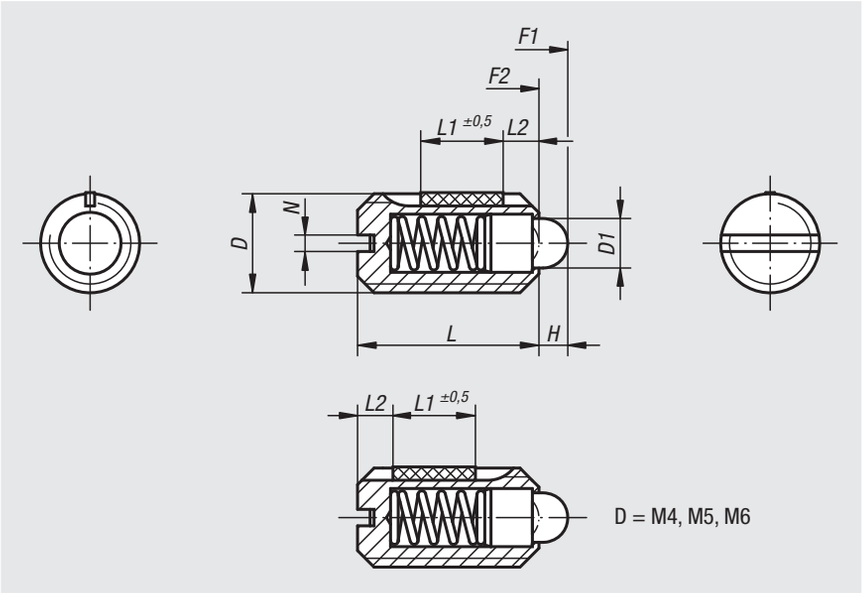

Material:
Sleeve 1.4305.
Thrust pin 1.4034.
Spring 1.4310.

LONG-LOK thread lock in nylon.

Version:
Bright.
Thrust pin hardened.

Sample order:
nlm 03026-10

Drawing reference:
L2 = approx. 2x thread pitch

Spring plungers with slot and thrust pin, standard spring force, LONG-LOK secured

Order No.	D	D1	L	L1	H	N	Spring force initial pressure F1 approx. N	Spring force final pressure F2 approx. N	Tightening torque approx. Nm	Loosening torque approx. Nm
03026-04	M4	1,8	9	5	1,5	0,6	6	20	0,18	0,12
03026-05	M5	2,4	12	6	2	0,8	6	20	0,12	0,08
03026-06	M6	2,7	14	7	2	1	7	20	0,44	0,21
03026-08	M8	4	16	8	2	1,2	15	30	1,1	0,38
03026-10	M10	4,5	19	9	2,5	1,6	20	35	1,36	0,62
03026-12	M12	6	22	10	3,5	2	30	55	2,11	1,41
03026-16	M16	8,5	24	14	4,5	2,5	45	100	3,95	3,05

Spring plungers with slot and thrust pin, light spring force, LONG-LOK secured

Order No.	D	D1	L	L1	H	N	Spring force initial pressure F1 approx. N	Spring force final pressure F2 approx. N	Tightening torque approx. Nm	Loosening torque approx. Nm
03026-104	M4	1,8	9	5	1,5	0,6	3	10	0,18	0,12
03026-105	M5	2,4	12	6	2	0,8	3	10	0,12	0,08
03026-106	M6	2,7	14	7	2	1	4	10	0,44	0,21
03026-108	M8	4	16	8	2	1,2	7	15	1,1	0,38
03026-110	M10	4,5	19	9	2,5	1,6	9	16	1,36	0,62
03026-112	M12	6	22	10	3,5	2	14	26	2,11	1,41
03026-116	M16	8,5	24	14	4,5	2,5	22	50	3,95	3,05

Spring plungers with slot and thrust pin, reinforced spring force, LONG-LOK secured

Order No.	D	D1	L	L1	H	N	Spring force initial pressure F1 approx. N	Spring force final pressure F2 approx. N	Tightening torque approx. Nm	Loosening torque approx. Nm
03026-205	M5	2,4	12	6	2	0,8	9	25	0,12	0,08
03026-206	M6	2,7	14	7	2	1	11	25	0,44	0,21
03026-208	M8	4	16	8	2	1,2	22	43	1,1	0,38
03026-210	M10	4,5	19	9	2,5	1,6	20	54	1,36	0,62
03026-212	M12	6	22	10	3,5	2	36	94	2,11	1,41
03026-216	M16	8,5	24	14	4,5	2,5	60	110	3,99	3,05

Spring plungers

with hexagon socket and ball, steel

Material:
Sleeve steel grade 5.8.
Ball steel.
Spring steel grade D.

Version:
Black oxidised. Ball hardened.

Sample order:
nlm 03030-210

column indexing

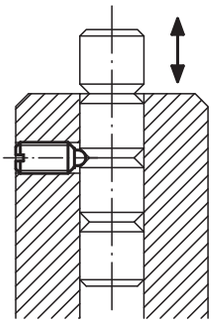

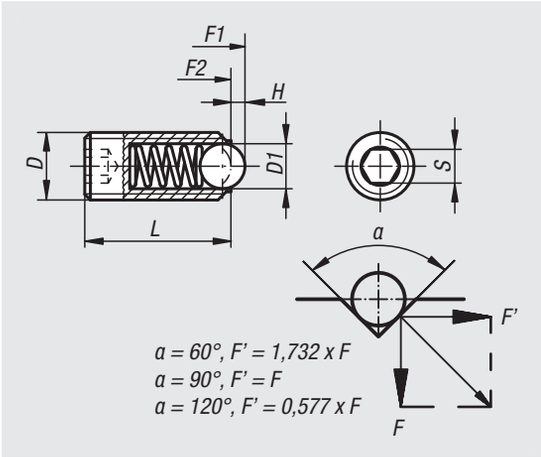

Spring plungers with hexagon socket and ball, standard spring

Order No.	D	D1	L	H	S	Spring force initial pressure F1 approx. N	Spring force final pressure F2 approx. N
03030-03	M3	1,5	9	0,4	1,5	1,5	3
03030-04	M4	2,5	10	0,8	2	4	10
03030-05	M5	3	14	0,9	2,5	6	11
03030-06	M6	3,5	15	1	3	9	13
03030-08	M8	5	18	1,5	4	15	30
03030-10	M10	6	23	2	5	20	35
03030-12	M12	8	26	2,5	6	30	55
03030-16	M16	10	33	3,5	8	65	125
03030-20	M20	12	43	4,5	10	80	160
03030-24	M24	15	48	5,5	12	90	180

Spring plungers with hexagon socket and ball, reinforced spring

Order No.	D	D1	L	H	S	Spring force initial pressure F1 approx. N	Spring force final pressure F2 approx. N
03030-203	M3	1,5	9	0,4	1,5	5	7
03030-204	M4	2,5	10	0,8	2	12	22
03030-205	M5	3	14	0,9	2,5	19	30
03030-206	M6	3,5	15	1	3	28	40
03030-208	M8	5	18	1,5	4	47	73
03030-210	M10	6	23	2	5	66	100
03030-212	M12	8	26	2,5	6	66	120
03030-216	M16	10	33	3,5	8	90	180
03030-220	M20	12	43	4,5	10	115	240
03030-224	M24	15	48	5,5	12	130	270

Spring plungers with hexagon socket and ball, long version, standard spring

Order No.	D	D1	L	H	S	Spring force initial pressure F1 approx. N	Spring force final pressure F2 approx. N
03030-404	M4	2,5	16	0,8	2	4	10
03030-405	M5	3	20	0,9	2,5	6	11
03030-406	M6	3,5	25	1	3	9	13
03030-408	M8	5	30	1,5	4	15	30
03030-410	M10	6	35	2	5	20	35
03030-412	M12	8	40	2,5	6	30	55
03030-416	M16	10	45	3,5	8	65	125

Spring plungers

with hexagon socket and ball, LONG-LOK secured, steel

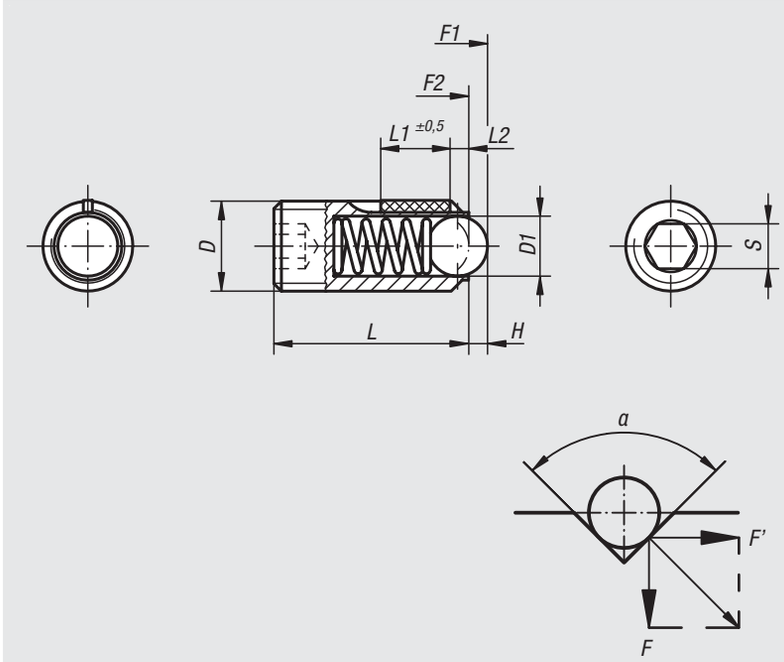

Material:
Sleeve steel grade 5.8.
Ball steel.
Spring steel grade D.

LONG-LOK thread lock nylon.

Version:
Black oxidised. Ball hardened.

Sample order:
nlm 03031-08

Drawing reference:
L2 = approx. 2x thread pitch

Spring plungers with hexagon socket and ball, standard spring, LONG-LOK secured

Order No.	D	D1	L	L1	H	S	Spring force initial pressure F1 approx. N	Spring force final pressure F2 approx. N	Tightening torque approx. Nm	Loosening torque approx. Nm
03031-03	M3	1,5	9	4	0,4	1,5	1,5	3	0,1	0,07
03031-04	M4	2,5	10	5	0,8	2	4	10	0,18	0,12
03031-05	M5	3	14	6	0,9	2,5	6	11	0,12	0,08
03031-06	M6	3,5	15	7	1	3	9	13	0,44	0,21
03031-08	M8	5	18	8	1,5	4	15	30	1,1	0,38
03031-10	M10	6	23	9	2	5	20	35	1,3	0,6
03031-12	M12	8	26	10	2,5	6	30	55	2	1,3
03031-16	M16	10	33	14	3,5	8	65	125	3,9	3

Spring plungers with hexagon socket and ball, reinforced spring, LONG-LOK secured

Order No.	D	D1	L	L1	H	S	Spring force initial pressure F1 approx. N	Spring force final pressure F2 approx. N	Tightening torque approx. Nm	Loosening torque approx. Nm
03031-203	M3	1,5	9	4	0,4	1,5	5	7	0,1	0,07
03031-204	M4	2,5	10	5	0,8	2	12	22	0,18	0,12
03031-205	M5	3	14	6	0,9	2,5	19	30	0,12	0,08
03031-206	M6	3,5	15	7	1	3	28	40	0,44	0,21
03031-208	M8	5	18	8	1,5	4	47	73	1,1	0,38
03031-210	M10	6	23	9	2	5	66	100	1,3	0,6
03031-212	M12	8	26	10	2,5	6	66	120	2	1,3
03031-216	M16	10	33	14	3,5	8	90	180	3,9	3

Spring plungers

with hexagon socket and ceramic ball

Material:
Sleeve 1.4305.
Ceramic ball Si_3N_4.
Spring 1.4310.

Version:
Bright.

Sample order:
nlm 03033-05

Note:
The combination of excellent material properties is a special feature of silicon nitride (Si_3N_4). These include for example high resiliance and stability, excellent wear properties and good chemical resistance.

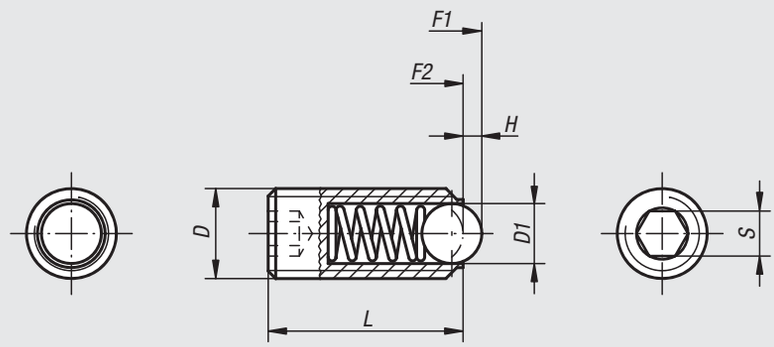

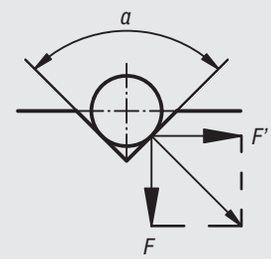

a = 60°, F' = 1,732 x F
a = 90°, F' = F
a = 120°, F' = 0,577 x F

column indexing

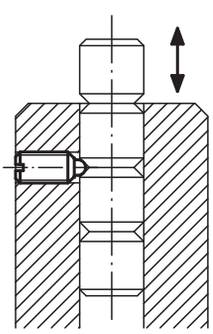

Order No.	D	D1	L	H	S	Spring force initial pressure F1 approx. N	Spring force final pressure F2 approx. N
03033-05	M5	3	14	0,9	2,5	6	11
03033-06	M6	3,5	15	1	3	9	13
03033-08	M8	5	18	1,5	4	15	30
03033-10	M10	6	23	2	5	20	35
03033-12	M12	8	26	2,5	6	30	55
03033-16	M16	10	33	3,5	8	65	125

Spring plungers

with hexagon socket and ball, stainless steel

Material:
Sleeve 1.4305.
Ball 1.4034.
Spring 1.4310.

Version:
Bright. Ball hardened.

Sample order:
nlm 03030-210

column indexing

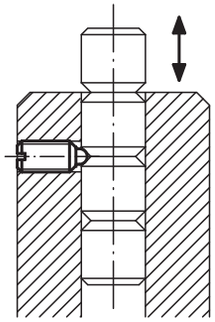

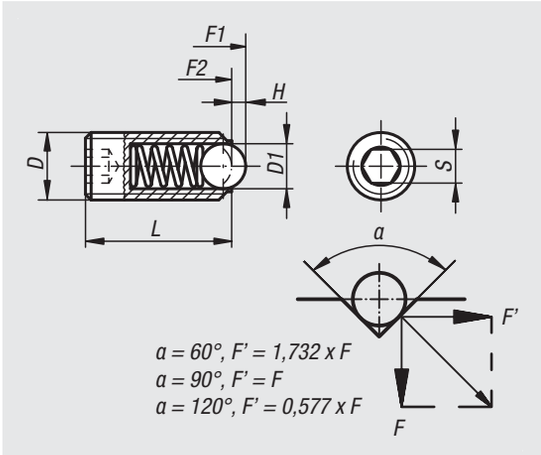

Spring plungers with hexagon socket and ball, standard spring

Order No.	D	D1	L	H	S	Spring force initial pressure F1 approx. N	Spring force final pressure F2 approx. N
03035-03	M3	1,5	9	0,4	1,5	1,5	3
03035-04	M4	2,5	10	0,8	2	4	10
03035-05	M5	3	14	0,9	2,5	6	11
03035-06	M6	3,5	15	1	3	9	13
03035-08	M8	5	18	1,5	4	15	30
03035-10	M10	6	23	2	5	20	35
03035-12	M12	8	26	2,5	6	30	55
03035-16	M16	10	33	3,5	8	65	125
03035-20	M20	12	43	4,5	10	80	160
03035-24	M24	15	48	5,5	12	90	180

Spring plungers with hexagon socket and ball, reinforced spring

Order No.	D	D1	L	H	S	Spring force initial pressure F1 approx. N	Spring force final pressure F2 approx. N
03035-203	M3	1,5	9	0,4	1,5	5	7
03035-204	M4	2,5	10	0,8	2	12	22
03035-205	M5	3	14	0,9	2,5	19	30
03035-206	M6	3,5	15	1	3	28	40
03035-208	M8	5	18	1,5	4	47	73
03035-210	M10	6	23	2	5	66	100
03035-212	M12	8	26	2,5	6	66	120
03035-216	M16	10	33	3,5	8	90	180
03035-220	M20	12	43	4,5	10	115	240
03035-224	M24	15	48	5,5	12	130	270

Spring plungers with hexagon socket and ball, long version, standard spring

Order No.	D	D1	L	H	S	Spring force initial pressure F1 approx. N	Spring force final pressure F2 approx. N
03035-404	M4	2,5	16	0,8	2	4	10
03035-405	M5	3	20	0,9	2,5	6	11
03035-406	M6	3,5	25	1	3	9	13
03035-408	M8	5	30	1,5	4	15	30
03035-410	M10	6	35	2	5	20	35
03035-412	M12	8	40	2,5	6	30	55
03035-416	M16	10	45	3,5	8	65	125

Spring plungers

with hexagon socket and ball, LONG-LOK secured stainless steel

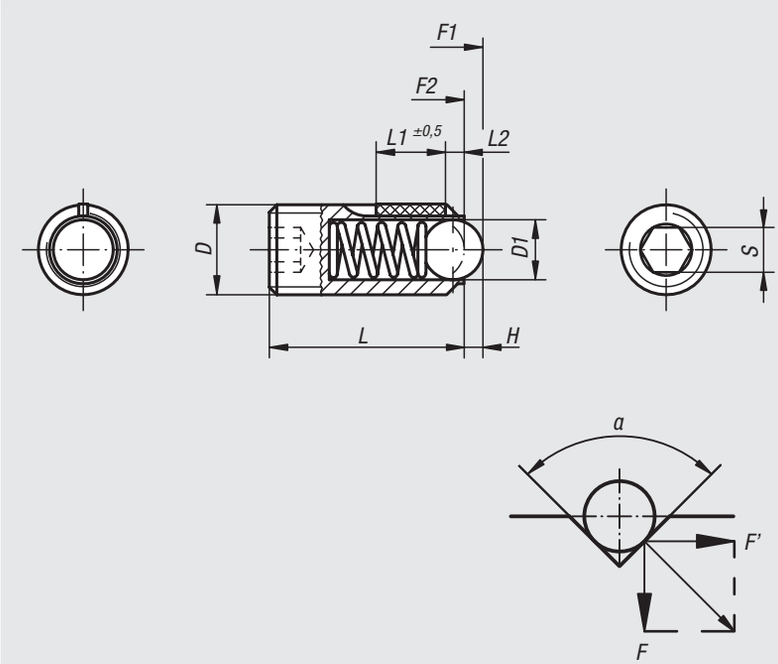

Material:
Sleeve 1.4305.
Ball 1.4034.
Spring 1.4310.

LONG-LOK thread lock, Nylon.

Version:
Bright. Ball hardened.

Sample order:
nlm 03036-08

Drawing reference:
L2 = approx. 2x thread pitch

Spring plungers with hexagon socket and ball, standard spring, LONG-LOK secured

Order No.	D	D1	L	L1	H	S	Spring force initial pressure F1 approx. N	Spring force final pressure F2 approx. N	Tightening torque approx. Nm	Loosening torque approx. Nm
03036-03	M3	1,5	9	4	0,4	1,5	1,5	3	0,1	0,07
03036-04	M4	2,5	10	5	0,8	2	4	10	0,18	0,12
03036-05	M5	3	14	6	0,9	2,5	6	11	0,12	0,08
03036-06	M6	3,5	15	7	1	3	9	13	0,44	0,21
03036-08	M8	5	18	8	1,5	4	15	30	1,1	0,38
03036-10	M10	6	23	9	2	5	20	35	1,3	0,6
03036-12	M12	8	26	10	2,5	6	30	55	2	1,3
03036-16	M16	10	33	14	3,5	8	65	125	3,9	3

Spring plungers with hexagon socket and ball, reinforced spring, LONG-LOK secured

Order No.	D	D1	L	L1	H	S	Spring force initial pressure F1 approx. N	Spring force final pressure F2 approx. N	Tightening torque approx. Nm	Loosening torque approx. Nm
03036-203	M3	1,5	9	4	0,4	1,5	5	7	0,1	0,07
03036-204	M4	2,5	10	5	0,8	2	12	22	0,18	0,12
03036-205	M5	3	14	6	0,9	2,5	19	30	0,12	0,08
03036-206	M6	3,5	15	7	1	3	28	40	0,44	0,21
03036-208	M8	5	18	8	1,5	4	47	73	1,1	0,38
03036-210	M10	6	23	9	2	5	66	100	1,3	0,6
03036-212	M12	8	26	10	2,5	6	66	120	2	1,3
03036-216	M16	10	33	14	3,5	8	90	180	3,9	3

Spring plungers

with hexagon socket and thrust pin, long version

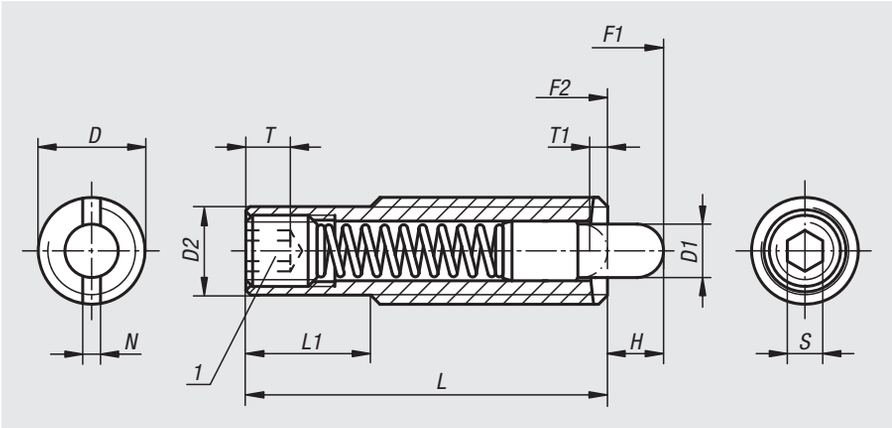

Material:
Sleeve steel grade 5.8.
Thrust pin steel.
Spring steel grade D.

Version:
Black oxidised.
Thrust pin hardened.

Sample order:
nlm 03040-616

Note:
These spring plungers are chiefly used as ejectors and spring stops in machine construction.

Drawing reference:
1) grub screw glued in

bending

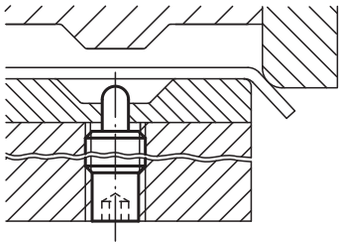

ready to eject

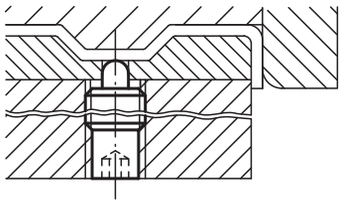

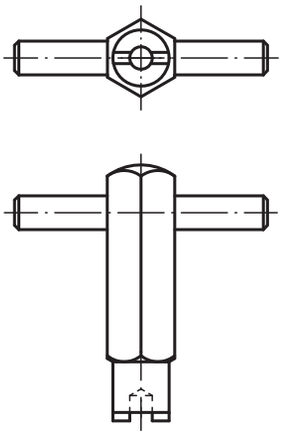

Order No.	D	D1	D2	L	L1	H	T	T1	N	S	Spring force initial pressure F1 approx. N	Spring force final pressure F2 approx. N	Order No. assembly key
03040-608X30	M8	3,5	6,2	30	10	6	2	1,4	1,2	2,5	8	20	03040-908
03040-608X40	M8	3,5	6,2	40	20	8	2	1,4	1,2	2,5	10	28	03040-908
03040-608X50	M8	3,5	6,2	50	30	10	2	1,4	1,2	2,5	12	38	03040-908
03040-608X60	M8	3,5	6,2	60	40	15	2	1,4	1,2	2,5	15	45	03040-908
03040-610X40	M10	4	8	40	10	8	2	1,4	1,6	3	12	30	03040-910
03040-610X50	M10	4	8	50	20	10	2	1,4	1,6	3	16	46	03040-910
03040-610X60	M10	4	8	60	30	15	2	1,4	1,6	3	20	55	03040-910
03040-610X80	M10	4	8	80	50	20	2	1,4	1,6	3	25	65	03040-910
03040-612X50	M12	6	9,6	50	20	10	3	2	2	4	20	50	03040-912
03040-612X60	M12	6	9,6	60	30	15	3	2	2	4	25	76	03040-912
03040-612X80	M12	6	9,6	80	50	20	3	2	2	4	35	102	03040-912
03040-612X100	M12	6	9,6	100	70	25	3	2	2	4	40	102	03040-912
03040-616X60	M16	7,5	13,4	60	30	12	6	2,5	2,5	5	30	64	03040-916
03040-616X80	M16	7,5	13,4	80	50	20	6	2,5	2,5	5	30	110	03040-916
03040-616X100	M16	7,5	13,4	100	70	30	6	2,5	2,5	5	30	120	03040-916
03040-616X120	M16	7,5	13,4	120	90	40	6	2,5	2,5	5	20	130	03040-916

Spring plungers

with hexagon socket and thrust pin, steel

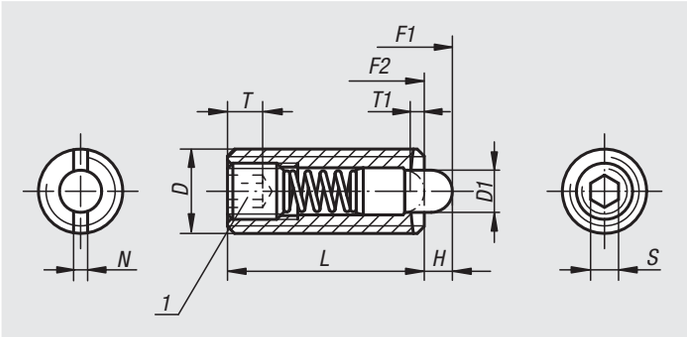

Material:
Sleeve steel grade 5.8.
Thrust pin steel.
Spring steel grade D.

Version:
Black oxidised.
Thrust pin hardened.

Sample order:
nlm 03040-16

Drawing reference:
1) grub screw glued in

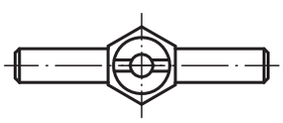

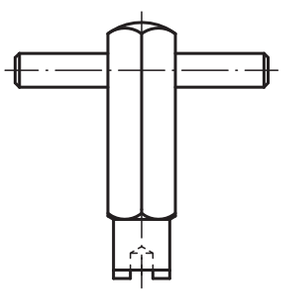

Spring plunger
sectional view

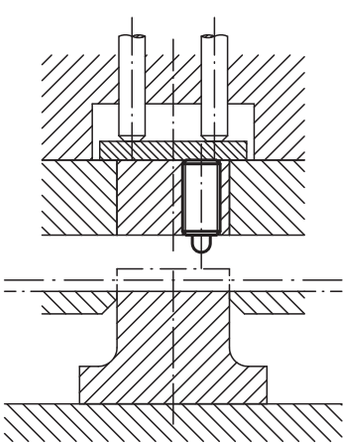

Spring plungers with hexagon socket and thrust pin, standard spring force

Order No.	D	D1	L	H	T	T1	N	S	Spring force initial pressure F1 approx. N	Spring force final pressure F2 approx. N	Order No. assembly key
03040-03	M3	1	10	1,5	1,5	1	0,4	0,7	0,5	3	03040-903
03040-04	M4	1,5	15	1,5	2	0,6	0,6	1,3	5	16	03040-904
03040-05	M5	2,4	18	2,3	2	0,8	0,8	1,5	6	20	03040-905
03040-06	M6	2,7	20	2,5	2,5	1	1	2	7	20	03040-906
03040-08	M8	3,5	22	3	3	1,4	1,2	2,5	9	35	03040-908
03040-10	M10	4	22	3	3,5	1,4	1,6	3	9	35	03040-910
03040-12	M12	6	28	4	5	2	2	4	12	55	03040-912
03040-16	M16	7,5	32	5	6	2,5	2,5	5	45	100	03040-916
03040-20	M20	10	40	7	8	3	2,5	6	60	120	-
03040-24	M24	12	52	10	10	3	2,5	8	80	160	-

Spring plungers with hexagon socket and thrust pin, light spring force

Order No.	D	D1	L	H	T	T1	N	S	Spring force initial pressure F1 approx. N	Spring force final pressure F2 approx. N	Order No. assembly key
03040-104	M4	1,5	15	1,5	2	0,6	0,6	1,3	2	7	03040-904
03040-105	M5	2,4	18	2,3	2	0,8	0,8	1,5	3	10	03040-905
03040-106	M6	2,7	20	2,5	2,5	1	1	2	3	9	03040-906
03040-108	M8	3,5	22	3	3	1,4	1,2	2,5	4	16	03040-908
03040-110	M10	4	22	3	3,5	1,4	1,6	3	4	16	03040-910
03040-112	M12	6	28	4	5	2	2	4	5	27	03040-912
03040-116	M16	7,5	32	5	6	2,5	2,5	5	20	45	03040-916

Spring plungers with hexagon socket and thrust pin, reinforced spring force

Order No.	D	D1	L	H	T	T1	N	S	Spring force initial pressure F1 approx. N	Spring force final pressure F2 approx. N	Order No. assembly key
03040-205	M5	2,4	18	2,3	2	0,8	0,8	1,5	11	29	03040-905
03040-206	M6	2,7	20	2,5	2,5	1	1	2	14	37	03040-906
03040-208	M8	3,5	22	3	3	1,4	1,2	2,5	22	65	03040-908
03040-210	M10	4	22	3	3,5	1,4	1,6	3	19	70	03040-910
03040-212	M12	6	28	4	5	2	2	4	25	85	03040-912
03040-216	M16	7,5	32	5	6	2,5	2,5	5	60	150	03040-916
03040-220	M20	10	40	7	8	3	2,5	6	75	190	-
03040-224	M24	12	52	10	10	3	2,5	8	95	240	-

Spring plungers

with hexagon socket and thrust pin, LONG-LOK secured, steel

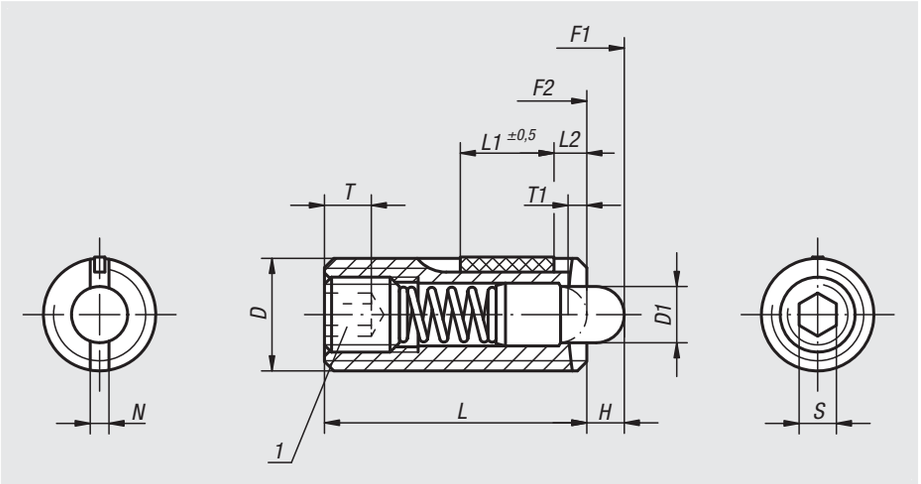

Material:
Sleeve steel grade 5.8.
Thrust pin steel.
Spring steel grade D.

LONG-LOK thread lock nylon.

Version:
Black oxidised.
Thrust pin hardened.

Sample order:
nlm 03041-12

Drawing reference:
L2 = ca. two full threads

1) grub screw glued-in

Spring plungers with hexagon socket and thrust pin, standard spring force, LONG-LOK secured

Order No.	D	D1	L	L1	H	T	T1	N	S	Spring force initial pressure F1 approx. N	Spring force final pressure F2 approx. N	Tightening torque approx. Nm	Loosening torque approx. Nm	Order No. assembly key
03041-05	M5	2,4	18	7	2,3	2	0,8	0,8	1,5	6	20	0,12	0,08	03040-905
03041-06	M6	2,7	20	7	2,5	2,5	1	1	2	7	20	0,45	0,22	03040-906
03041-08	M8	3,5	22	8	3	3	1,4	1,2	2,5	9	35	1,05	0,37	03040-908
03041-10	M10	4	22	9	3	3,5	1,4	1,6	3	9	35	1,3	0,6	03040-910
03041-12	M12	6	28	10	4	5	2	2	4	12	55	2	1,3	03040-912
03041-16	M16	7,5	32	14	5	6	2,5	2,5	5	45	100	3,9	3	03040-916

Spring plungers with hexagon socket and thrust pin, light spring force, LONG-LOK secured

Order No.	D	D1	L	L1	H	T	T1	N	S	Spring force initial pressure F1 approx. N	Spring force final pressure F2 approx. N	Tightening torque approx. Nm	Loosening torque approx. Nm	Order No. assembly key
03041-105	M5	2,4	18	7	2,3	2	0,8	0,8	1,5	3	10	0,12	0,08	03040-905
03041-106	M6	2,7	20	7	2,5	2,5	1	1	2	3	9	0,45	0,22	03040-906
03041-108	M8	3,5	22	8	3	3	1,4	1,2	2,5	4	16	1,05	0,37	03040-908
03041-110	M10	4	22	9	3	3,5	1,4	1,6	3	4	16	1,3	0,6	03040-910
03041-112	M12	6	28	10	4	5	2	2	4	5	27	2	1,3	03040-912
03041-116	M16	7,5	32	14	5	6	2,5	2,5	5	20	45	3,9	3	03040-916

Spring plungers with hexagon socket and thrust pin, reinforced spring force, LONG-LOK secured

Order No.	D	D1	L	L1	H	T	T1	N	S	Spring force initial pressure F1 approx. N	Spring force final pressure F2 approx. N	Tightening torque approx. Nm	Loosening torque approx. Nm	Order No. assembly key
03041-205	M5	2,4	18	7	2,3	2	0,8	0,8	1,5	11	29	0,12	0,08	03040-905
03041-206	M6	2,7	20	7	2,5	2,5	1	1	2	14	37	0,45	0,22	03040-906
03041-208	M8	3,5	22	8	3	3	1,4	1,2	2,5	22	65	1,05	0,37	03040-908
03041-210	M10	4	22	9	3	3,5	1,4	1,6	3	19	70	1,3	0,6	03040-910
03041-212	M12	6	28	10	4	5	2	2	4	25	85	2	1,3	03040-912
03041-216	M16	7,5	32	14	5	6	2,5	2,5	5	60	150	3,9	3	03040-916

Spring plungers

with hexagon socket and POM thrust pin, steel

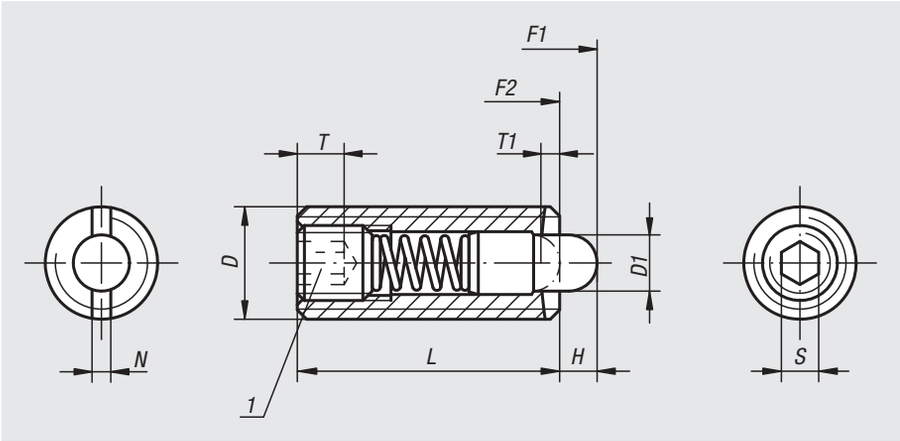

Material:
Sleeve steel grade 5.8.
Thrust pin POM.
Spring steel grade D.

Version:
Black oxidised.

Sample order:
nlm 03050-16

Drawing reference:
1) grub screw glued in

Spring plunger
sectional view

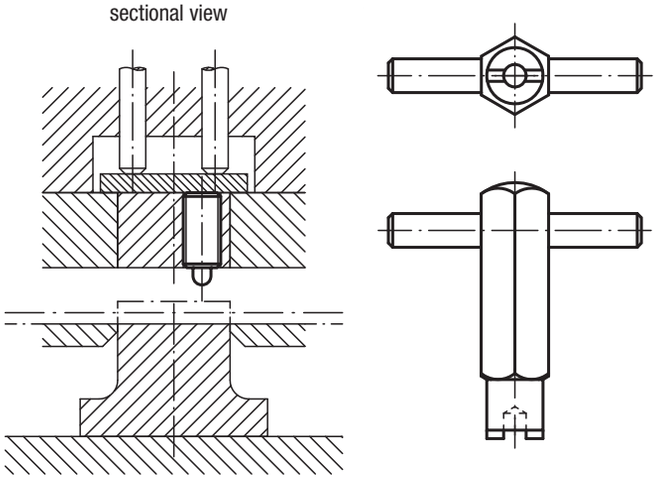

Spring plungers with hexagon socket and thrust pin, standard spring force

Order No.	D	D1	L	H	T	T1	N	S	Spring force initial pressure F1 approx. N	Spring force final pressure F2 approx. N	Order No. assembly key
03050-03	M3	1	10	1,5	1,5	1	0,4	0,7	0,5	3	03040-903
03050-04	M4	1,5	15	1,5	2	0,6	0,6	1,3	5	16	03040-904
03050-05	M5	2,4	18	2,3	2	0,8	0,8	1,5	6	20	03040-905
03050-06	M6	2,7	20	2,5	2,5	1	1	2	7	20	03040-906
03050-08	M8	3,5	22	3	3	1,4	1,2	2,5	9	35	03040-908
03050-10	M10	4	22	3	3,5	1,4	1,6	3	9	35	03040-910
03050-12	M12	6	28	4	5	2	2	4	12	55	03040-912
03050-16	M16	7,5	32	5	6	2,5	2,5	5	45	100	03040-916

Spring plungers with hexagon socket and thrust pin, light spring force

Order No.	D	D1	L	H	T	T1	N	S	Spring force initial pressure F1 approx. N	Spring force final pressure F2 approx. N	Order No. assembly key
03050-104	M4	1,5	15	1,5	2	0,6	0,6	1,3	2	7	03040-904
03050-105	M5	2,4	18	2,3	2	0,8	0,8	1,5	3	10	03040-905
03050-106	M6	2,7	20	2,5	2,5	1	1	2	3	9	03040-906
03050-108	M8	3,5	22	3	3	1,4	1,2	2,5	4	16	03040-908
03050-110	M10	4	22	3	3,5	1,4	1,6	3	4	16	03040-910
03050-112	M12	6	28	4	5	2	2	4	5	27	03040-912
03050-116	M16	7,5	32	5	6	2,5	2,5	5	20	45	03040-916

Spring plungers

with hexagon socket and POM thrust pin, LONG-LOK secured, steel

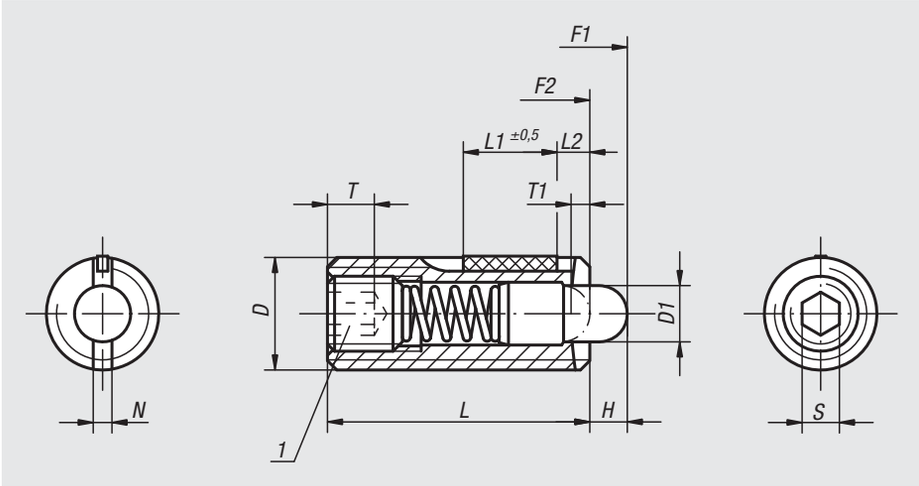

Material:
Sleeve steel grade 5.8.
Thrust pin POM.
Spring steel grade D.

LONG-LOK thread lock nylon.

Version:
Black oxidised.

Sample order:
nlm 03051-12

Drawing reference:
L2 = ca. two full threads

1) grub screw glued-in

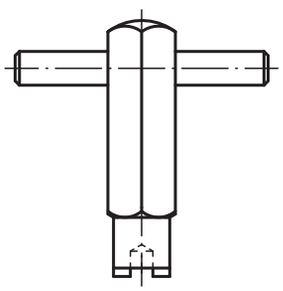

Spring plungers with hexagon socket and thrust pin, standard spring force, LONG-LOK secured

Order No.	D	D1	L	L1	H	T	T1	N	S	Spring force initial pressure F1 approx. N	Spring force final pressure F2 approx. N	Tightening torque approx. Nm	Loosening torque approx. Nm	Order No. assembly key
03051-05	M5	2,4	18	7	2,3	2	0,8	0,8	1,5	6	20	0,12	0,08	03040-905
03051-06	M6	2,7	20	7	2,5	2,5	1	1	2	7	20	0,45	0,22	03040-906
03051-08	M8	3,5	22	8	3	3	1,4	1,2	2,5	9	35	1,05	0,37	03040-908
03051-10	M10	4	22	9	3	3,5	1,4	1,6	3	9	35	1,3	0,6	03040-910
03051-12	M12	6	28	10	4	5	2	2	4	12	55	2	1,3	03040-912
03051-16	M16	7,5	32	14	5	6	2,5	2,5	5	45	100	3,9	3	03040-916

Spring plungers with hexagon socket and thrust pin, light spring force, LONG-LOK secured

Order No.	D	D1	L	L1	H	T	T1	N	S	Spring force initial pressure F1 approx. N	Spring force final pressure F2 approx. N	Tightening torque approx. Nm	Loosening torque approx. Nm	Order No. assembly key
03051-105	M5	2,4	18	7	2,3	2	0,8	0,8	1,5	3	10	0,12	0,08	03040-905
03051-106	M6	2,7	20	7	2,5	2,5	1	1	2	3	9	0,45	0,22	03040-906
03051-108	M8	3,5	22	8	3	3	1,4	1,2	2,5	4	16	1,05	0,37	03040-908
03051-110	M10	4	22	9	3	3,5	1,4	1,6	3	4	16	1,3	0,6	03040-910
03051-112	M12	6	28	10	4	5	2	2	4	5	27	2	1,3	03040-912
03051-116	M16	7,5	32	14	5	6	2,5	2,5	5	20	45	3,9	3	03040-916

Spring plungers

with hexagon socket and thrust pin, stainless steel

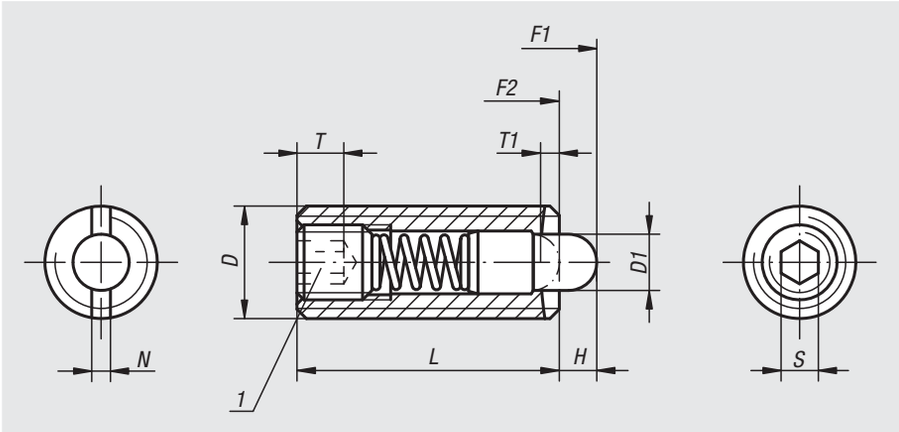

Material:
Sleeve 1.4305.
Thrust pin 1.4034.
Spring 1.4310.

Version:
Bright.
Thrust pin hardened.

Sample order:
nlm 03055-16

Drawing reference:
1) grub screw glued in

Spring plunger
sectional view

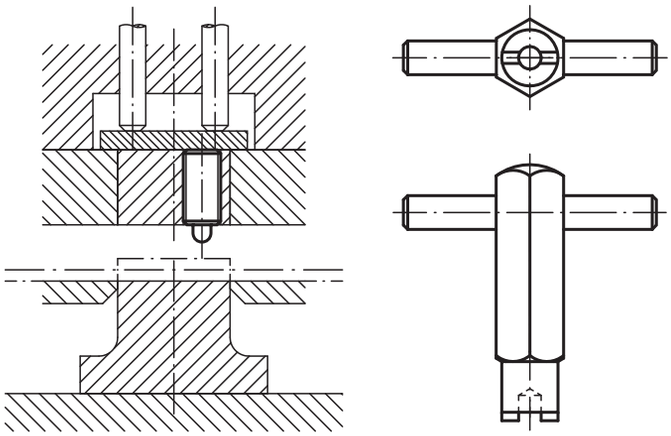

Spring plungers with hexagon socket and thrust pin, standard spring force

Order No.	D	D1	L	H	T	T1	N	S	Spring force initial pressure F1 approx. N	Spring force final pressure F2 approx. N	Order No. assembly key
03055-03	M3	1	10	1,5	1,5	1	0,4	0,7	0,5	3	03040-903
03055-04	M4	1,5	15	1,5	2	0,6	0,6	1,3	5	16	03040-904
03055-05	M5	2,4	18	2,3	2	0,8	0,8	1,5	5	17	03040-905
03055-06	M6	2,7	20	2,5	2,5	1	1	2	6	17	03040-906
03055-08	M8	3,5	22	3	3	1,4	1,2	2,5	7	29	03040-908
03055-10	M10	4	22	3	3,5	1,4	1,6	3	8	31	03040-910
03055-12	M12	6	28	4	5	2	2	4	10	47	03040-912
03055-16	M16	7,5	32	5	6	2,5	2,5	5	45	100	03040-916

Spring plungers with hexagon socket and thrust pin, reinforced spring force

Order No.	D	D1	L	H	T	T1	N	S	Spring force initial pressure F1 approx. N	Spring force final pressure F2 approx. N	Order No. assembly key
03055-205	M5	2,4	18	2,3	2	0,8	0,8	1,5	9	26	03040-905
03055-206	M6	2,7	20	2,5	2,5	1	1	2	11	35	03040-906
03055-208	M8	3,5	22	3	3	1,4	1,2	2,5	15	48	03040-908
03055-210	M10	4	22	3	3,5	1,4	1,6	3	15	58	03040-910
03055-212	M12	6	28	4	5	2	2	4	19	74	03040-912

Spring plungers

with hexagon socket and thrust pin, LONG-LOK secured, stainless steel

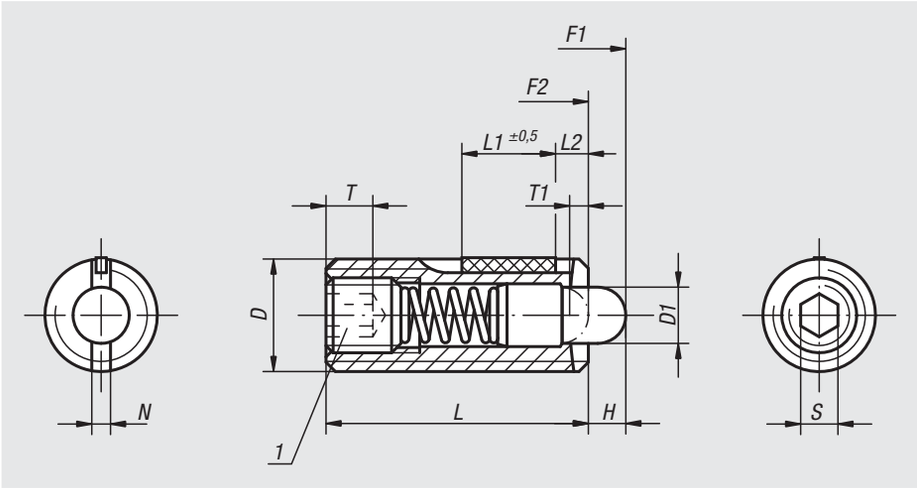

Material:
Sleeve 1.4305.
Thrust pin 1.4034.
Spring 1.4310.

LONG-LOK thread lock in nylon.

Version:
Bright.
Thrust pin hardened.

Sample order:
nlm 03056-12

Drawing reference:
L2 = ca. two full threads

1) grub screw glued-in

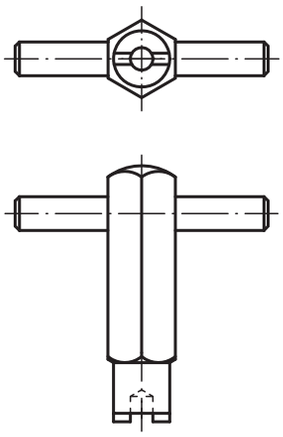

Spring plungers with hexagon socket and thrust pin, standard spring force, LONG-LOK secured

Order No.	D	D1	L	L1	H	T	T1	N	S	Spring force initial pressure F1 approx. N	Spring force final pressure F2 approx. N	Tightening torque approx. Nm	Loosening torque approx. Nm	Order No. assembly key
03056-05	M5	2,4	18	7	2,3	2	0,8	0,8	1,5	5	17	0,12	0,08	03040-905
03056-06	M6	2,7	20	7	2,5	2,5	1	1	2	6	17	0,45	0,22	03040-906
03056-08	M8	3,5	22	8	3	3	1,4	1,2	2,5	7	29	1,05	0,37	03040-908
03056-10	M10	4	22	9	3	3,5	1,4	1,6	3	8	31	1,3	0,6	03040-910
03056-12	M12	6	28	10	4	5	2	2	4	10	47	2	1,3	03040-912
03056-16	M16	7,5	32	14	5	6	2,5	2,5	5	45	100	3,9	3	03040-916

Spring plungers with hexagon socket and thrust pin, reinforced spring force, LONG-LOK secured

Order No.	D	D1	L	L1	H	T	T1	N	S	Spring force initial pressure F1 approx. N	Spring force final pressure F2 approx. N	Tightening torque approx. Nm	Loosening torque approx. Nm	Order No. assembly key
03056-205	M5	2,4	18	7	2,3	2	0,8	0,8	1,5	9	26	0,12	0,08	03040-905
03056-206	M6	2,7	20	7	2,5	2,5	1	1	2	11	35	0,45	0,22	03040-906
03056-208	M8	3,5	22	8	3	3	1,4	1,2	2,5	15	48	1,05	0,37	03040-908
03056-210	M10	4	22	9	3	3,5	1,4	1,6	3	15	58	1,3	0,6	03040-910
03056-212	M12	6	28	10	4	5	2	2	4	19	74	2	1,3	03040-912

Spring plungers

with hexagon socket and POM thrust pin, stainless steel

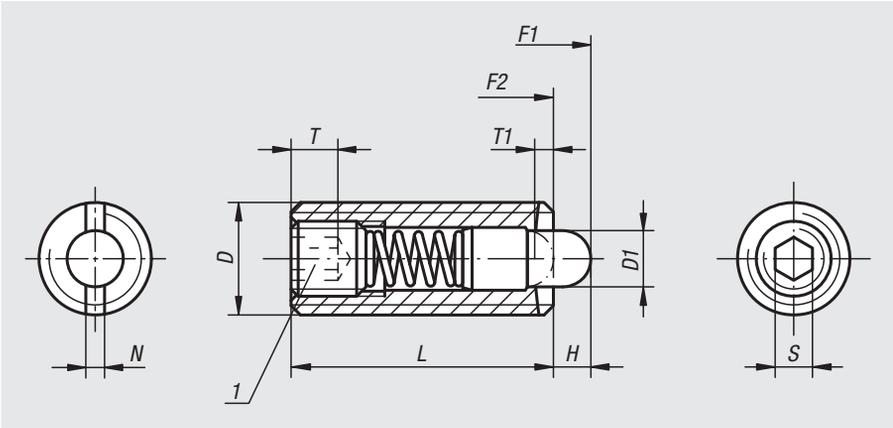

Material:
Sleeve 1.4305.
Thrust pin POM.
Spring 1.4310.

Version:
Bright.

Sample order:
nlm 03058-16

Drawing reference:
1) grub screw glued in

Spring plunger
sectional view

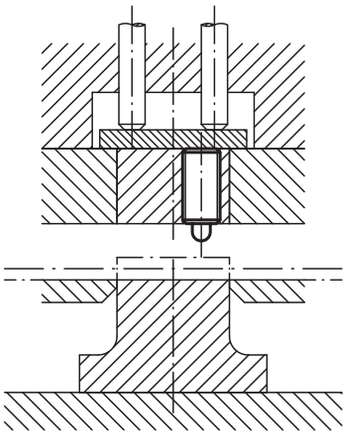

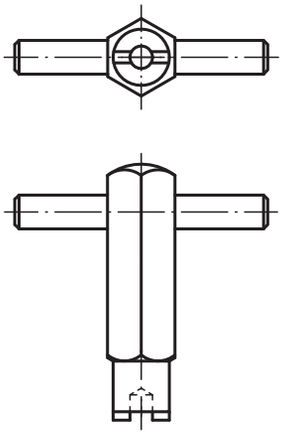

Order No.	D	D1	L	H	T	T1	N	S	Spring force initial pressure F1 approx. N	Spring force final pressure F2 approx. N	Order No. assembly key
03058-03	M3	1	10	1,5	1,5	1	0,4	0,7	0,5	3	03040-903
03058-04	M4	1,5	15	1,5	2	0,6	0,6	1,3	5	16	03040-904
03058-05	M5	2,4	18	2,3	2	0,8	0,8	1,5	5	17	03040-905
03058-06	M6	2,7	20	2,5	2,5	1	1	2	6	17	03040-906
03058-08	M8	3,5	22	3	3	1,4	1,2	2,5	7	29	03040-908
03058-10	M10	4	22	3	3,5	1,4	1,6	3	8	31	03040-910
03058-12	M12	6	28	4	5	2	2	4	10	47	03040-912
03058-16	M16	7,5	32	5	6	2,5	2,5	5	45	100	03040-916

Spring plungers

with hexagon socket and POM thrust pin, LONG-LOK secured, stainless steel

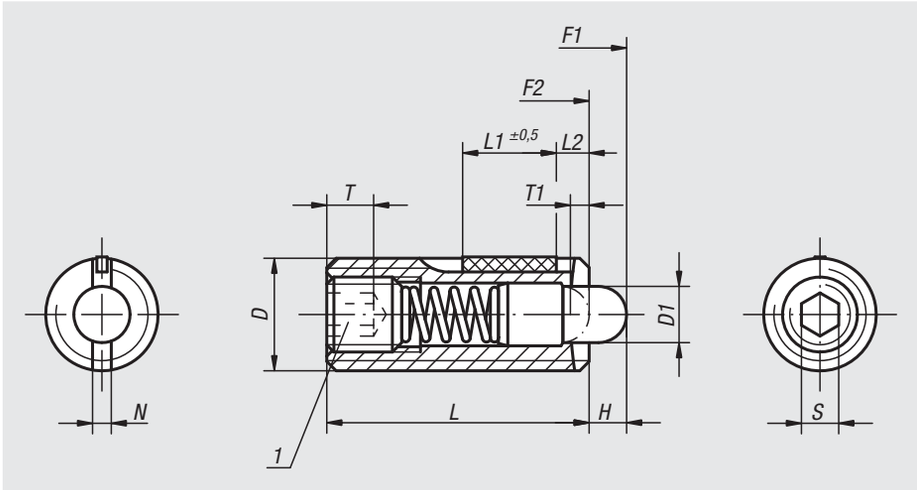

Material:
Sleeve 1.4305.
Thrust pin POM.
Spring 1.4310.

LONG-LOK thread lock Nylon.

Version:
Bright.

Sample order:
nlm 03059-12

Drawing reference:
L2 = ca. two full threads

1) grub screw glued-in

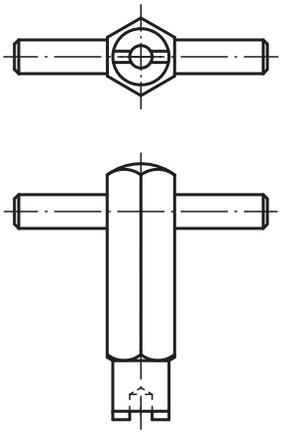

Order No.	D	D1	L	L1	H	T	T1	N	S	Spring force initial pressure F1 approx. N	Spring force final pressure F2 approx. N	Tightening torque approx. Nm	Loosening torque approx. Nm	Order No. assembly key
03059-05	M5	2,4	18	7	2,3	2	0,8	0,8	1,5	5	17	0,12	0,08	03040-905
03059-06	M6	2,7	20	7	2,5	2,5	1	1	2	6	17	0,45	0,22	03040-906
03059-08	M8	3,5	22	8	3	3	1,4	1,2	2,5	7	29	1,05	0,37	03040-908
03059-10	M10	4	22	9	3	3,5	1,4	1,6	3	8	31	1,3	0,6	03040-910
03059-12	M12	6	28	10	4	5	2	2	4	10	47	2	1,3	03040-912
03059-16	M16	7,5	32	14	5	6	2,5	2,5	5	45	100	3,9	3	03040-916

Spring plungers

with head

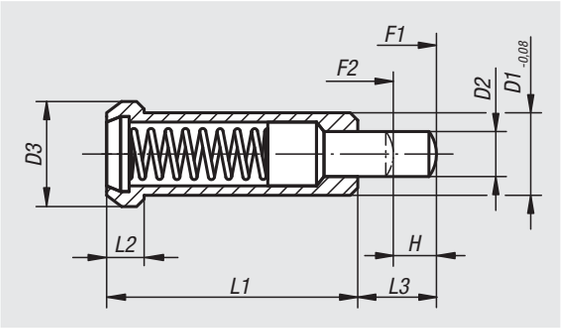

Material:
Steel.

Version:
Black oxidised.
Thrust pin hardened.

Sample order:
nlm 03060-10

Note:
These spring plungers are chiefly used as ejectors and spring stops in machine construction.

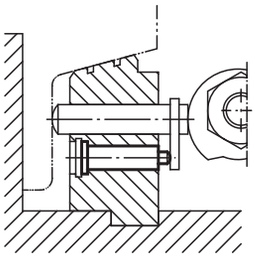

Order No.	D1	D2	D3	L1	L2	L3	H	Spring force initial pressure F1 approx. N	Spring force final pressure F2 approx. N
03060-06	6	2,95	8	20	3,2	6	3,5	10	22
03060-08	8	3,95	10	24	3,2	8	4,5	30	90
03060-10	10	5,95	13	30	4	10	5,5	42	110
03060-12	12	7,95	16	36	5	12	6,5	50	130

Spring plungers

with detent ring

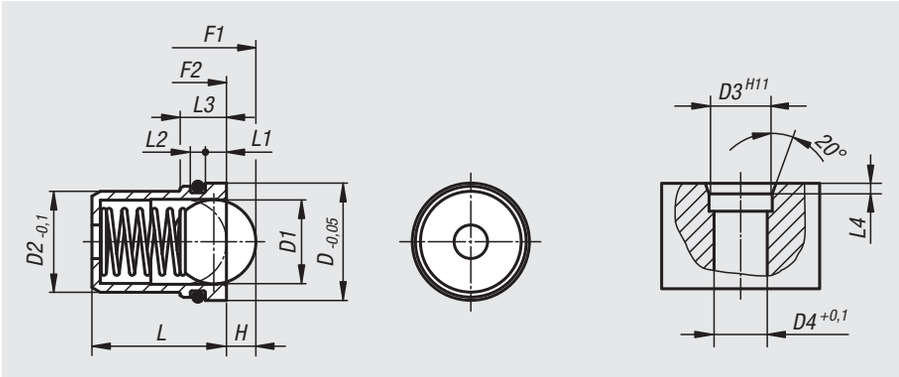

Material:
Sleeve, spring and ball in stainless steel.
O-ring NBR.

Version:
Sleeve bright.
Ball hardened, bright.
O-ring black.

Sample order:
nlm 03065-05

Note:
These spring plungers with O-ring are suitable for overhead installation or for installing in difficult to access positions.

They can be pressed into the location hole by hand or using simple assembly tools. The O-ring holds the plunger in place and prevents it falling out. Other components can be easily installed without the need for further assembly aids.

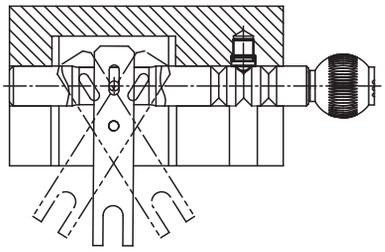

Order No.	D	D1	D2	D3	D4	H	L	L1	L2	L3	L4	Spring force initial pressure F1 approx. N	Spring force final pressure F2 approx. N
03065-05	4,95	3	4	5	4,1	0,8	5	1	0,7	2,3	0,7	3	7
03065-06	5,95	4	5	6	5,1	1	6	1	0,7	2,3	0,7	4	7
03065-08	7,95	5	6	8	6,1	1,5	7	1,5	1,2	3,7	1	6	12
03065-10	9,95	6,5	8	10	8,1	1,8	9	2	1,2	4,2	1,5	6	12
03065-12	11,95	8	10	12	10,1	2,7	13,5	2,5	1,8	5,3	2	10	20
03065-14	13,95	10	12	14	12,1	3,5	16	2,5	1,8	5,5	2	15	25

03069

Locators

Material:
Steel.

Version:
Bright, hardened.

Sample order:
nlm 03069-05020

Note:
If abrasion-resistant and exact locking is necessary, locators can be used together with spring plungers, especially with strong spring force.

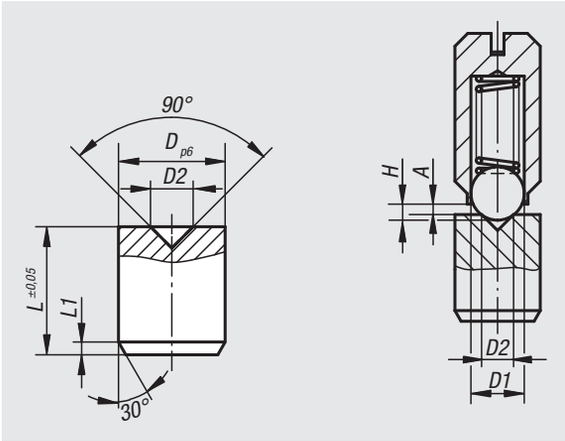

$$A = H - \left(\frac{D1 + D2}{2} - \frac{\sqrt{2}}{2} \times D1 \right)$$

Order No.	Suitable for spring plungers with ØD	D	D1	D2	H	L	L1
03069-04015	- / M4	4	See relevant products for dimensions	1,5	See relevant products for dimensions	5	0,5
03069-05020	Ø4 / M5	5	See relevant products for dimensions	2	See relevant products for dimensions	6	0,5
03069-06020	Ø5 / M6	6	See relevant products for dimensions	2	See relevant products for dimensions	8	0,7
03069-08030	Ø6 / M8	8	See relevant products for dimensions	3	See relevant products for dimensions	10	1
03069-10040	Ø8 / M10	10	See relevant products for dimensions	4	See relevant products for dimensions	12	1,2
03069-12060	Ø10 / M12	12	See relevant products for dimensions	6	See relevant products for dimensions	14	1,5
03069-16080	Ø12 / M16	16	See relevant products for dimensions	8	See relevant products for dimensions	18	2

03070

Spring plungers

smooth version, extended, stainless steel

Material:
Sleeve and spring stainless steel.
Ball stainless steel or POM.

Version:
Sleeve bright.
Ball hardened, bright.

Sample order:
nlm 03070-104

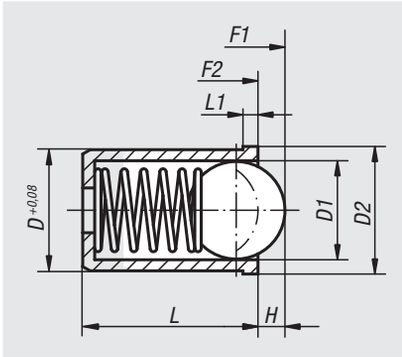

Order No.	Component material	D	D1	D2	L	L1	H	Spring force initial pressure F1 approx. N	Spring force final pressure F2 approx. N
03070-104	stainless steel	4	3	4,6	9	1	0,8	12	22
03070-105	stainless steel	5	4	5,6	12	1	1	19	30
03070-106	stainless steel	6	5	6,5	14	1	1,5	22	40
03070-108	stainless steel	8	6	8,5	16	1	1,8	42	73
03070-110	stainless steel	10	8	12	22	2,5	2,7	54	100
03070-112	stainless steel	12	10	14	24	2,5	3,2	54	122
03070-404	POM	4	3	4,6	9	1	0,8	12	22
03070-405	POM	5	4	5,6	12	1	1	19	30
03070-406	POM	6	5	6,5	14	1	1,5	22	40
03070-408	POM	8	6	8,5	16	1	1,8	42	73
03070-410	POM	10	8	12	22	2,5	2,7	54	100
03070-412	POM	12	10	14	24	2,5	3,2	54	122

Spring plungers

smooth version, stainless steel

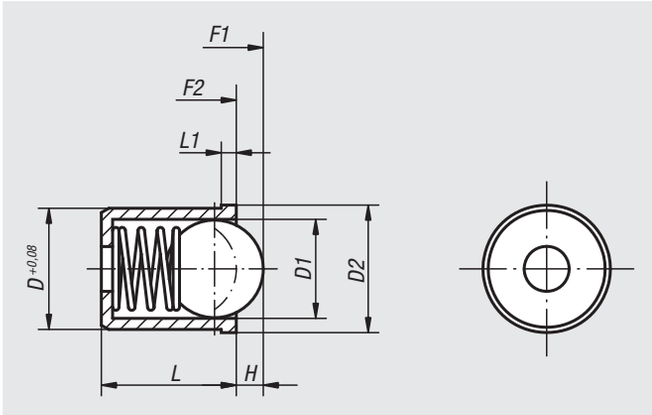

Material:
Sleeve and spring stainless steel.
Ball stainless steel or POM.

Version:
Sleeve bright.
Ball hardened, bright.

Sample order:
nlm 03070-05

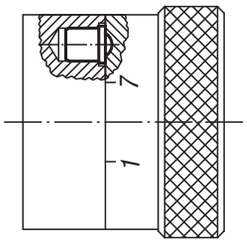

Order No.	Component material	D	D1	D2	L	L1	H	Spring force initial pressure F1 approx. N	Spring force final pressure F2 approx. N
03070-02	stainless steel	2	1,5	2,5	3	0,6	0,4	1,2	2,5
03070-03	stainless steel	3	2,5	3,5	4	0,8	0,65	1,7	3,4
03070-04	stainless steel	4	3	4,6	5	1	0,8	3	7
03070-05	stainless steel	5	4	5,6	6	1	1	4	7
03070-06	stainless steel	6	5	6,5	7	1	1,5	6	12
03070-08	stainless steel	8	6,5	8,5	9	1	1,8	6	12
03070-10	stainless steel	10	8	12	13,5	2,5	2,7	10	20
03070-12	stainless steel	12	10	14	16	2,5	3,5	15	25
03070-304	POM	4	3	4,6	5	1	0,6	3	7
03070-305	POM	5	4	5,6	6	1	0,8	4	7
03070-306	POM	6	5	6,5	7	1	1,3	6	12
03070-308	POM	8	6,5	8,5	9	1	1,6	6	12
03070-310	POM	10	8	12	13,5	2,5	2,6	10	20
03070-312	POM	12	10	14	16	2,5	3,3	15	25

Spring plungers

smooth version, plastic

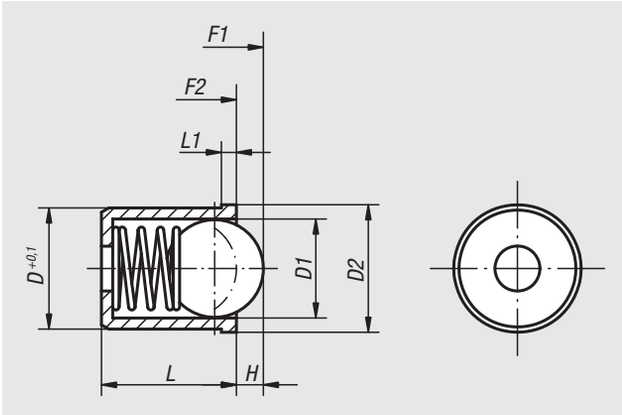

Material:
Sleeve thermoplastic.
Spring stainless steel.
Ball stainless steel or POM.

Version:
Sleeve black.
Ball hardened, bright.

Sample order:
nlm 03071-05

Order No.	Component material	D	D1	D2	L	L1	H	Spring force initial pressure F1 approx. N	Spring force final pressure F2 approx. N
03071-04	stainless steel	4	3	4,6	5	1	0,7	3	7
03071-05	stainless steel	5	4	5,6	6	1	1	4	7
03071-06	stainless steel	6	5	6,5	7	1	1,5	6	12
03071-08	stainless steel	8	6,5	8,5	9	1	1,8	6	12
03071-10	stainless steel	10	8	12	13,5	2,5	2,7	10	20
03071-12	stainless steel	12	10	14	16	2,5	3,5	15	25
03071-204	POM	4	3	4,6	5	1	0,7	3	7
03071-205	POM	5	4	5,6	6	1	1	4	7
03071-206	POM	6	5	6,5	7	1	1,5	6	12
03071-208	POM	8	6,5	8,5	9	1	1,8	6	12
03071-210	POM	10	8	12	13,5	2,5	2,7	10	20
03071-212	POM	12	10	14	16	2,5	3,5	15	25

03072

Spring plungers

smooth version without collar, stainless steel

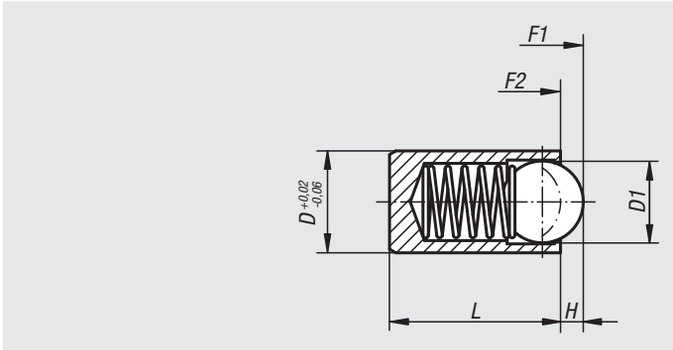

Material:
Sleeve and spring stainless steel.
Ball stainless steel or POM.

Version:
Ball hardened, bright.

Sample order:
nlm 03072-208

Order No.	Component material	D	D1	L	H	Spring force initial pressure F1 approx. N	Spring force final pressure F2 approx. N
03072-203	stainless steel	3	2	7	0,65	5	7
03072-204	stainless steel	4	3	9	0,8	12	22
03072-205	stainless steel	5	4	12	1	19	30
03072-206	stainless steel	6	5	14	1,5	22	40
03072-208	stainless steel	8	6	16	1,8	42	73
03072-210	stainless steel	10	8	22	2,7	54	100
03072-212	stainless steel	12	10	24	3,2	54	122

Order No.	Component material	D	D1	L	H	Spring force initial pressure F1 approx. N	Spring force final pressure F2 approx. N
03072-304	POM	4	3	9	0,6	12	22
03072-305	POM	5	4	12	0,9	19	30
03072-306	POM	6	5	14	1,3	22	40
03072-308	POM	8	6	16	1,7	42	73
03072-310	POM	10	8	22	2,6	54	100
03072-312	POM	12	10	24	3,1	54	122

03073

Spring plungers

with head

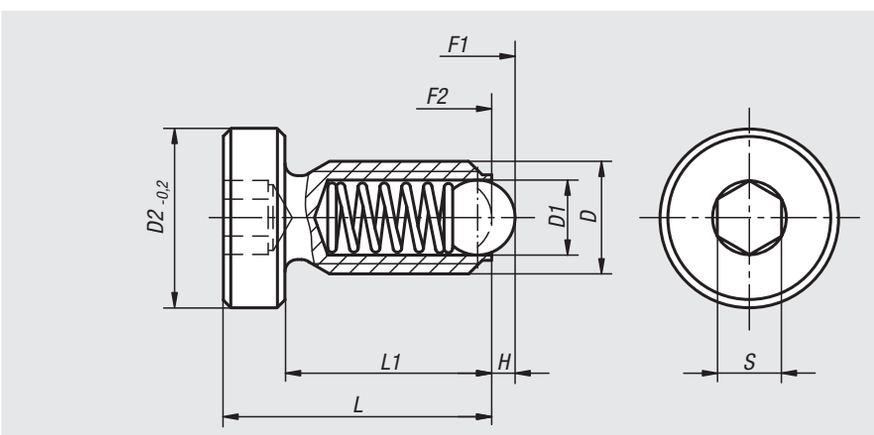

Material:
Steel or stainless steel.

Version:
Steel black oxidised.
Stainless steel bright.
Ball steel or stainless steel, hardened, bright.

Sample order:
nlm 03073-10

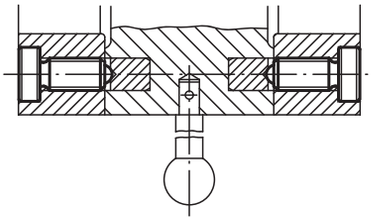

Order No. steel	Order No. stainless steel	D	D1	D2	L	L1	H	S	Spring force initial pressure F1 approx. N	Spring force final pressure F2 approx. N
03073-04	**03073-041**	M4	2,5	7	13	10	0,8	2	4	10
03073-05	**03073-051**	M5	3	8,5	17	13	0,9	2,5	6	11
03073-06	**03073-061**	M6	3,5	10	16	12	1	3	9	13
03073-08	**03073-081**	M8	5	13	21	16	1,5	4	15	30
03073-10	**03073-101**	M10	6	16	26	20	2	5	20	35
03073-12	**03073-121**	M12	8	18	32	25	2,5	6	30	55

Spring plungers

smooth version, double-sided

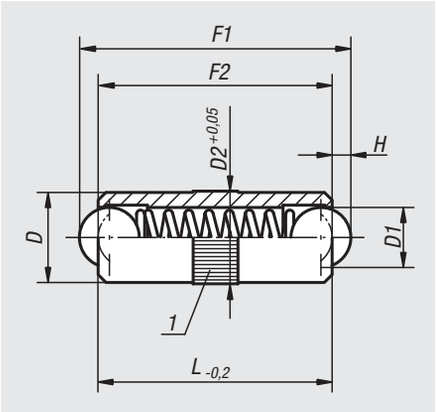

Material:
Sleeve brass. Ball and spring stainless steel.

Version:
Balls hardened, bright.

Sample order:
nlm 03074-05

Drawing reference:
1) knurl

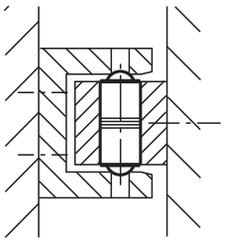

Order No.	D	D1	D2	L	H	Spring force initial pressure F1 approx. N	Spring force final pressure F2 approx. N
03074-025	2,5	2	2,55	6	0,65	1,5	2,8
03074-03	3	2,5	3,05	8	0,8	2,5	6
03074-04	4	3	4,05	10	0,9	3	7
03074-05	5	4	5,05	12	1,2	4	8
03074-06	6	5	6,05	16	1,6	6	10
03074-08	8	6	8,05	20	2	8	12
03074-10	10	8	10,05	24	2,9	10	16

Double ball catch

Material:
Housing and latch chrome plated brass.
Balls and springs stainless steel.

Sample order:
nlm 03075-50

Note:
Quick catch for various applications such as holding doors, hatches, screens etc. closed. The double ball catch consists of a housing and a latch bracket that engages between the two balls. The latch bracket can engage from the front or the side. The engagement pressure is adjustable.

Drawing reference:
1) counterbore DIN 74-A

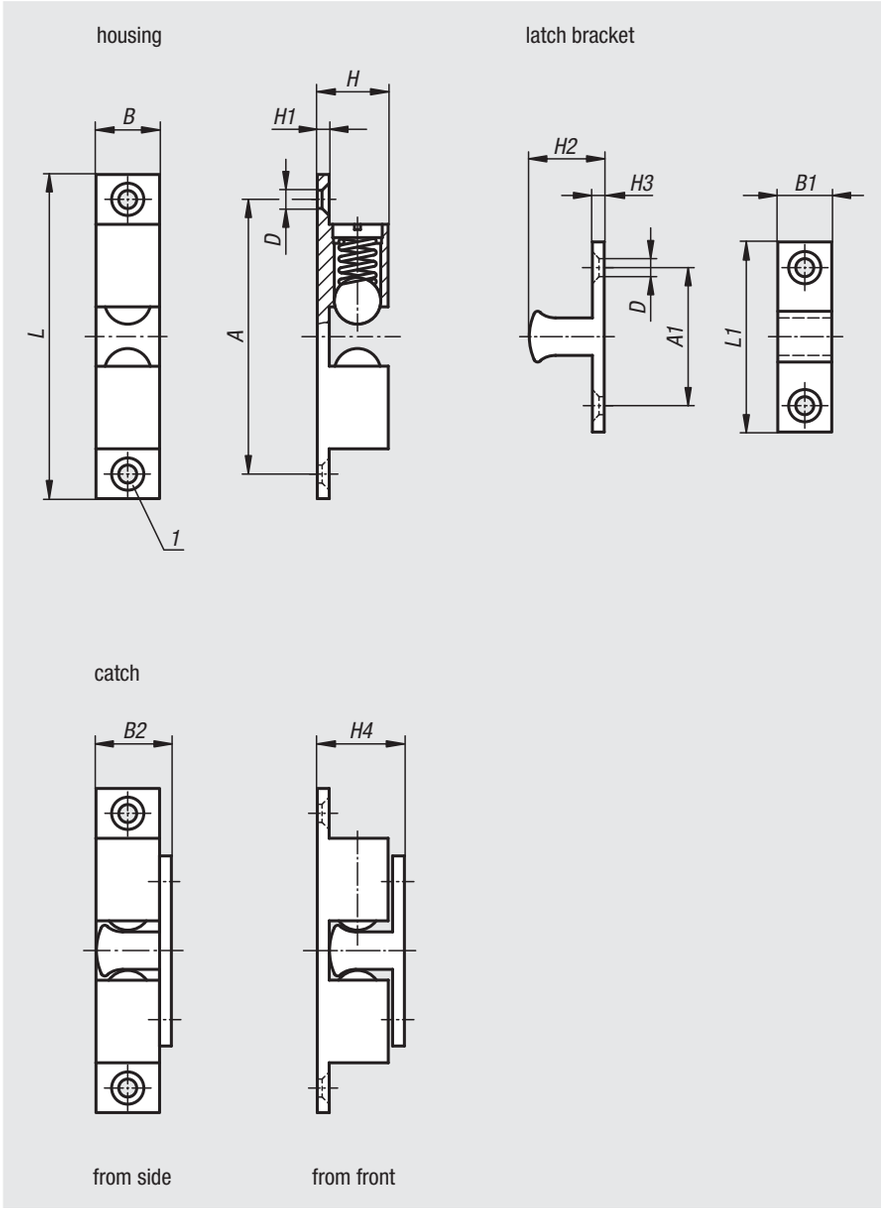

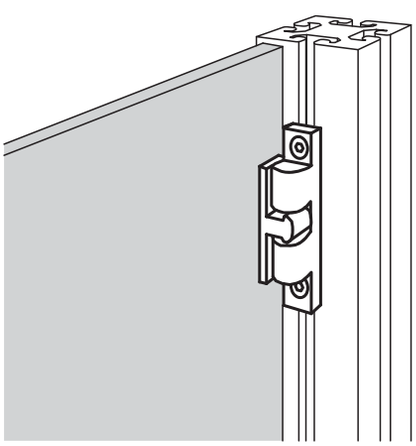

Order No.	A	A1	B	B1	B2	D	H	H1	H2	H3	H4	L	L1	Clamping force ca. N
03075-50	39,8	19,8	8,8	7,6	10,8	3,8	10,6	2	11,2	2	13,2	49	28,8	35±5
03075-60	50	23,5	11	9	13,5	4,8	13,2	2,4	13,5	2,2	15,5	60	35	30±7
03075-70	58	30	13	12	15,2	4,8	15	2,4	15,7	2,2	18,1	68,4	40,2	25±5

03075-10

Ball catch

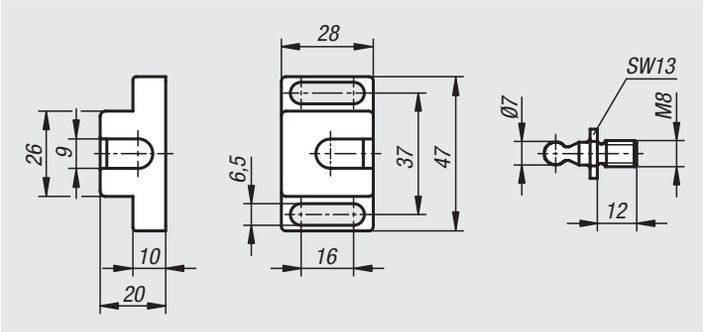

Material:
Polyamide fibreglass reinforced.
Ball pins, steel or stainless steel 1.4301.

Version:
black.

Sample order:
nlm 03075-10-400

Note:
Quick lock for swing and sliding doors. The elongated holes enable flexible positioning on aluminium profiles and panel elements.

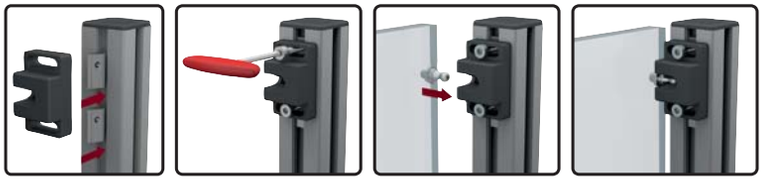

Order No.	Component material	Retaining force F1 N
03075-10-400	steel	40
03075-10-401	stainless steel	40
03075-10-500	steel	50
03075-10-501	stainless steel	50

03075-10

Spacer for ball catch

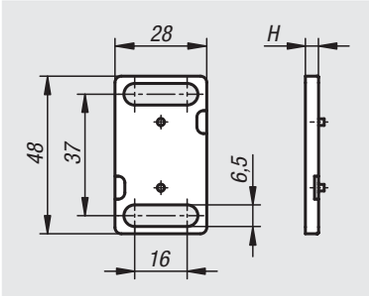

Material:
Polyamide fibreglass reinforced.

Version:
black.

Sample order:
nlm 03075-10-94

Note:
These riser plates enable the height of the ball catch to be increased.

Order No.	H
03075-10-94	4

Angle bracket for ball catch

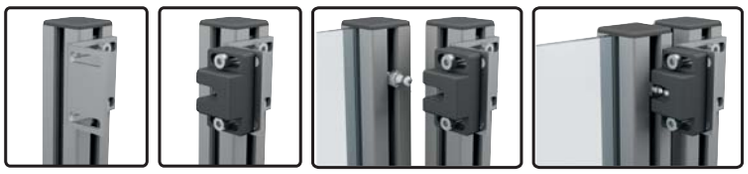

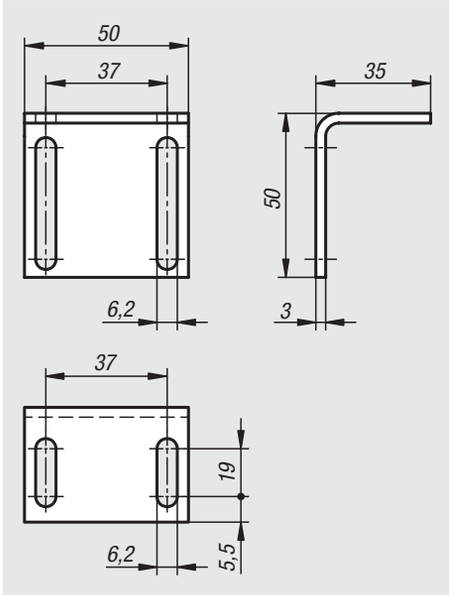

Material:
Steel.

Version:
galvanized.

Sample order:
nlm 03075-10-9503550

Note:
These angle brackets enable the ball catch to be flexibly positioned.

Order No.	Dimensions
03075-10-9503550	see drawing

Notes

Magnetic lock

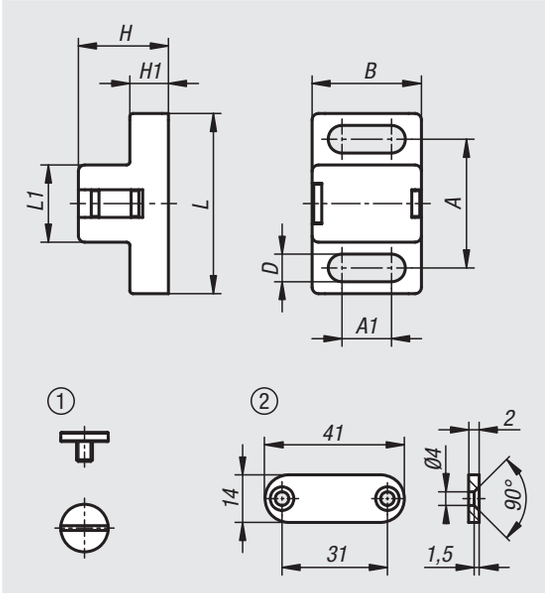

Material:
Polyamide fibreglass reinforced
DIN 921 pan head screw, steel.
Retaining plate, steel.

Version:
Black.
Pan head screw and retaining plate galvanized.

Sample order:
nlm 03075-11-17281

Note:
Magnetic catch for swing and sliding doors. The elongated holes enable flexible positioning on aluminium profiles and panel elements.

Drawing reference:
1) Pan head screw
2) Retaining plate

Order No.	A	A1	B	D	H	H1	L	L1	Retaining force F1 N	Retaining force F2 N	Counterpart
03075-11-17281	20	7,7	17	4,3	14	6	28	12	5	3	M4x5 pan head screw
03075-11-28401	30	13,5	28	6,3	20	10	40	19	20	10	M5x6 pan head screw
03075-11-28402	30	13,5	28	6,3	20	10	40	19	20	10	M5x6 pan head screw and 14x41x2 retaining plate

Angle bracket for magnetic lock

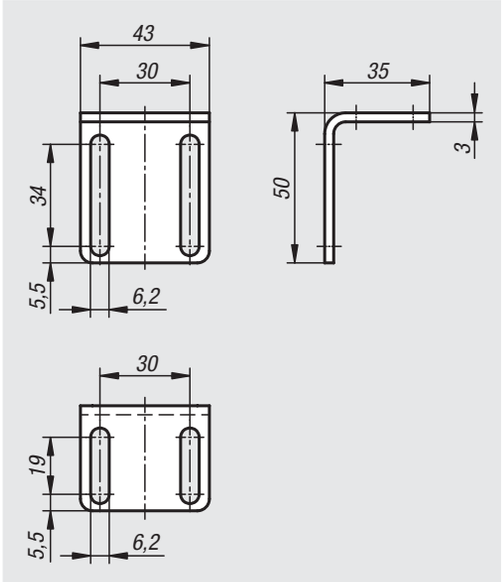

Material:
Steel.

Version:
galvanized.

Sample order:
nlm 03075-11-9503543

Note:
These angle brackets enable the magnetic catch to be flexibly positioned.

Order No.	Dimensions
03075-11-9503543	see drawing

Notes

Spring plungers,

smooth version, self-clamping, plastic

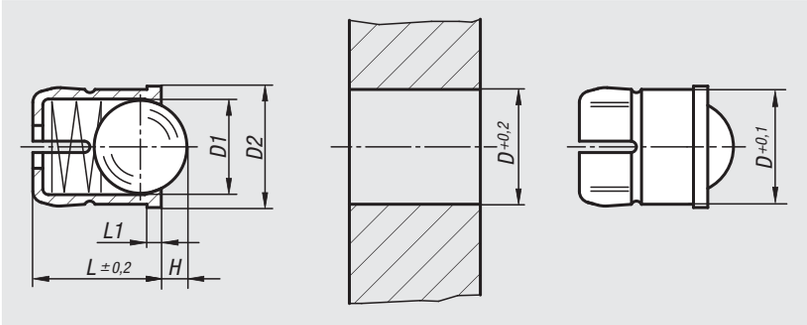

Material:
Sleeve thermoplastic.
Spring stainless steel.
Ball stainless steel or POM.

Version:
Sleeve black.
Ball hardened, bright.

Sample order:
nlm 03076-410

Note:
The self-locking function of the spring plunger enables simple assembly and secure overhead installation.

Order No.	Component material	D	D1	D2	L	L1	H	Spring force initial pressure F1 approx. N	Spring force final pressure F2 approx. N
03076-04	stainless steel	4	3	4,6	5	1	0,8	3	6,5
03076-05	stainless steel	5	4	5,6	6	1	1	6	9,4
03076-06	stainless steel	6	5	6,5	7	1	1,6	6,2	12,6
03076-08	stainless steel	8	6,5	8,5	9	1	1,9	10	20,4
03076-10	stainless steel	10	8	11	13,5	1,5	2,4	11,9	22,3
03076-204	POM	4	3	4,6	5	1	0,8	3	6,5
03076-205	POM	5	4	5,6	6	1	1	6	9,4
03076-206	POM	6	5	6,5	7	1	1,6	6,2	12,6
03076-208	POM	8	6,5	8,5	9	1	1,9	10	20,4
03076-210	POM	10	8	11	13,5	1,5	2,4	11,9	22,3

Spring plungers

smooth version

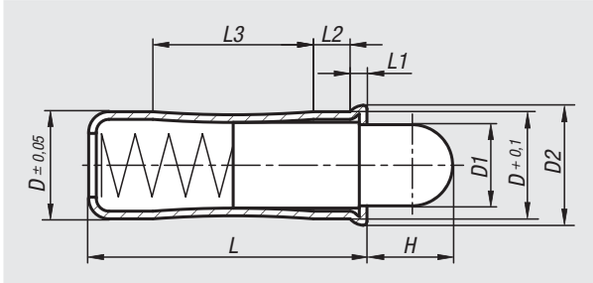

Material:
Sleeve and spring stainless steel.
Pin stainless steel or POM.

Version:
Pins, white POM, temperature-resistant to +50°C.

Sample order:
nlm 03077-08

Note:
Smooth version to press-in.
A H7 tolerance is recommended for the receiving hole with diameter D.

Order No.	Component material	D	D1	D2	L	L1	L2	L3	H	Spring force initial pressure F1 approx. N	Spring force final pressure F2 approx. N
03077-04	stainless steel	4	2,8	4,6	10,7	0,9	1,8	5,6	2,7	3	8,2
03077-05	stainless steel	5	3,8	5,6	12	0,9	2,1	6	4	3,3	9
03077-06	stainless steel	6	4,8	6,5	15	1	2,3	8,2	5,5	6,1	12
03077-08	stainless steel	8	6,2	8,5	18	1,1	2,9	9,5	6,5	10,7	17
03077-10	stainless steel	10	8	11	26	1,5	4,2	14,3	8	16,2	29
03077-204	POM	4	2,8	4,6	10,7	0,9	1,8	5,6	2,7	3	8,2
03077-205	POM	5	3,8	5,6	12	0,9	2,1	6	4	3,3	9
03077-206	POM	6	4,8	6,5	15	1	2,3	8,2	5,5	6,1	12
03077-208	POM	8	6,2	8,5	18	1,1	2,9	9,5	6,5	10,7	17
03077-210	POM	10	8	11	26	1,5	4,2	14,3	8	16,2	29

Eccentric stops

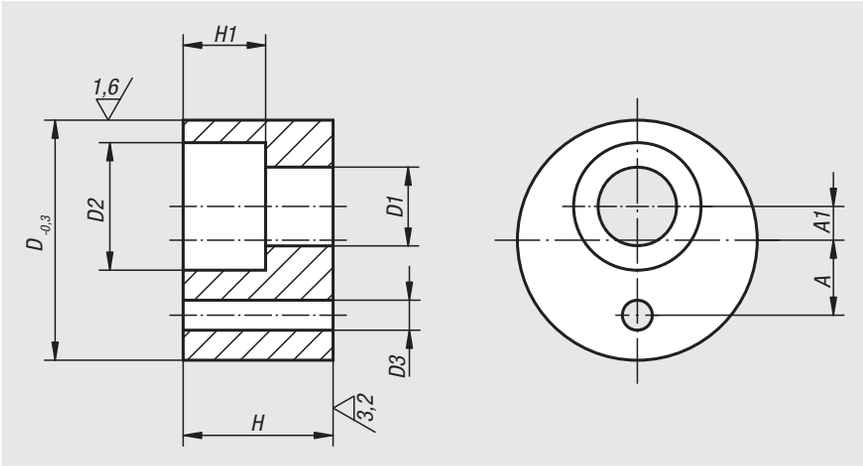

Material:
Carbon steel.

Version:
Tempered and black oxidised.

Sample order:
nlm 03080-10

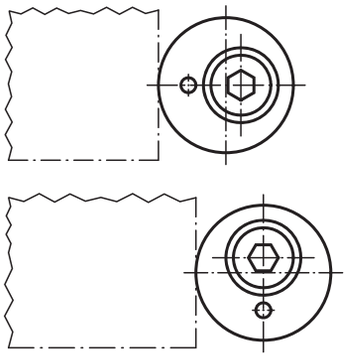

Order No.	D	D1	D2	D3	H	H1	A	A1
03080-05	16	5,5	10	2	10	6	5	1,5
03080-06	20	6,6	11	2	12	7	6	2,5
03080-08	25	9	15	4	16	9	8	3,5
03080-10	32	11	18	4	20	11	10	4,5
03080-12	36	13,5	20	4	25	13	12	5,5

Clamp stops adjustable

for slot profiles

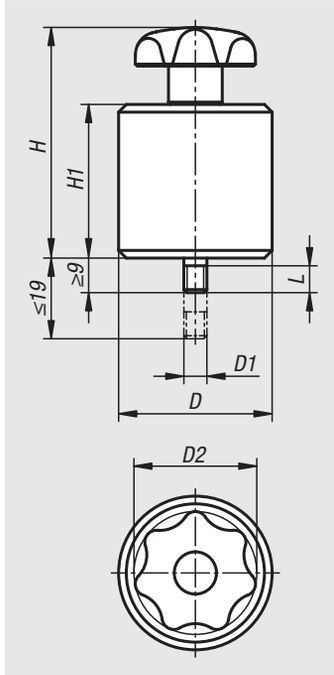

Material:
Body aluminium.
Other metal components steel.
Plastic components PA6.

Version:
Body natural tone anodized.
Other metal components blue passivated.

Sample order:
nlm 03081-064040

Note:
Sliding stop for profile systems type B, type I, and DIN 650 T-slots. Locked by turning the star grip. Sprung threaded pin ensures smooth sliding without tilting the slot key when loosened.

Accessories:
07071-0806
07073-0606
07073-0806
07075-0806
07077-1006
07078-1006
07060-06
07060-061
07060-806
07060-2061
07060-206

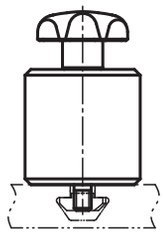

Order No.	D	D1	D2	H	H1	L
03081-064040	40	M6	32	60	40	7

03083

Stops

adjustable

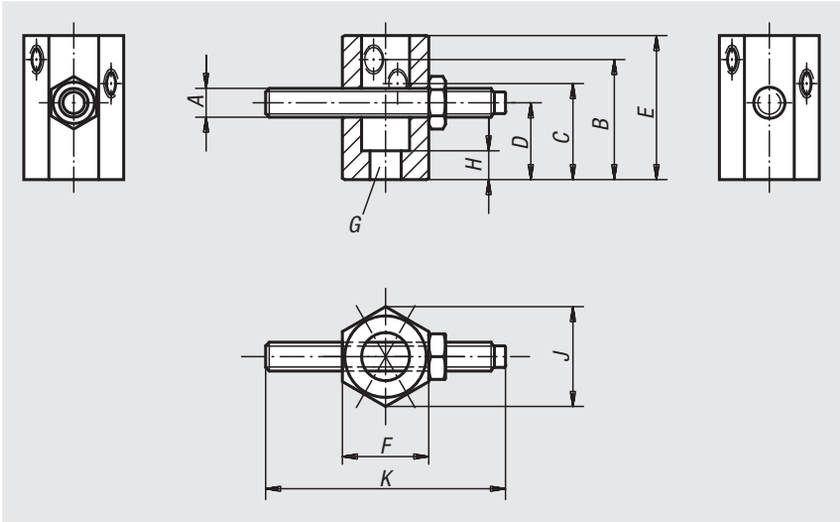

Material:
Body and set screw carbon steel.

Version:
Body black oxidised.
Set screw tempered and black oxidised.

Sample order:
nlm 03083-16063

Note:
The adjustable stops have three tapped holes to accept the set screws.

Order No.	A	B	C	D	E	F	G hole for DIN 912 cap screw	H	J	K
03083-08032	M8	32	25	20	40	21	M8	7	24,3	50
03083-12050	M12	50	40	32	60	36	M12	12	41,6	100
03083-16063	M16	63	50	40	80	46	M16	16	53,1	100

03085

Screw stops

adjustable

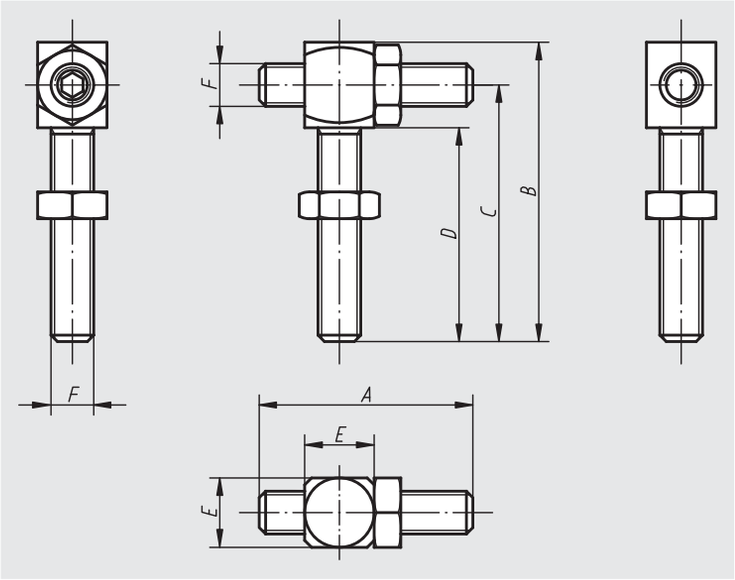

Material:
Carbon steel, tempered.

Version:
Black oxidised.

Sample order:
nlm 03085-10

Order No.	A	B	C	D	E	F
03085-06	30	44	37	30	10	M6
03085-08	40	56	48	40	13	M8
03085-10	50	70	60	50	17	M10
03085-12	60	84	72	60	19	M12
03085-16	80	112	96	80	24	M16

03086

Stop screws

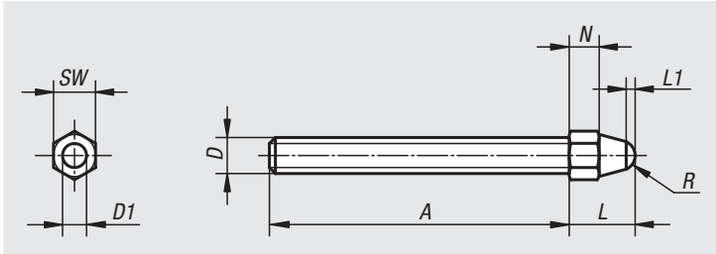

Material:
Steel.

Version:
Black oxidised. Domed head hardened.

Sample order:
nlm 03086-108

Order No.	A	D	D1	L	L1	N	R	SW
03086-106	50	M6	4	10	1,5	4	2,5	7
03086-108	65	M8	6	14	1,5	6	3,75	10
03086-110	85	M10	8	17	2	7	5	11
03086-112	110	M12	10	20	2,5	8	6,25	13
03086-116	130	M16	12	26	3	10	7,5	17

20010

Stop screws

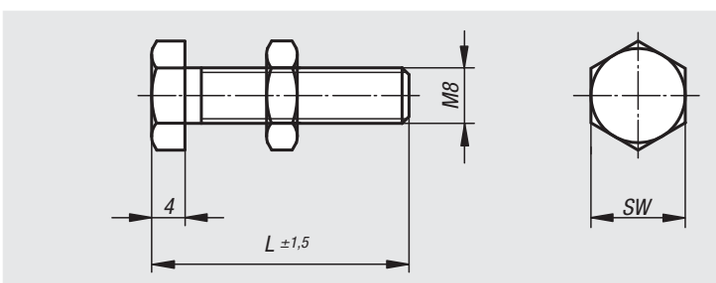

Material:
Steel
grade 8.8.

Version:
Stop screw black oxidised.
Stop face hardened (52 HRC).
Nut galvanized.

Sample order:
nlm 20010-08017

Note:
The screw heads are machined before being hardened giving a defined and permanently consistent stop face.

Order No.	L	SW
20010-08017	17	13
20010-08022	22	13
20010-08027	27	13
20010-08032	32	13
20010-08035	35	13
20010-08045	45	13
20010-08055	55	13
20010-08065	65	13
20010-08073	73	13
20010-08088	88	13

Stop screws

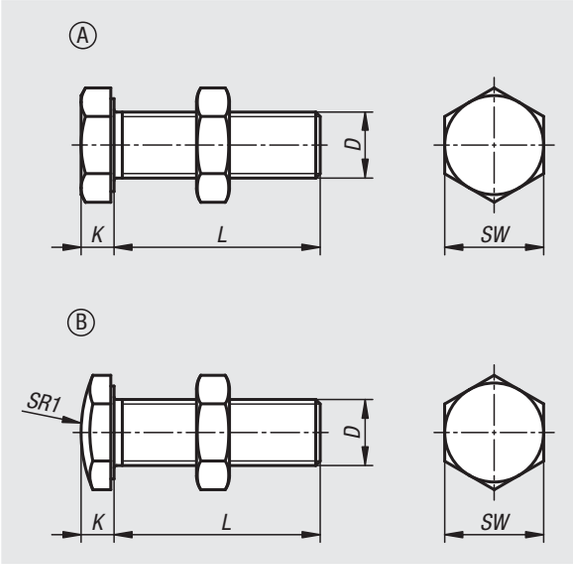

Material:
Steel grade 10.9
(M3 8.8)

Version:
Stop screw black oxidised.
Nut galvanized.

Sample order:
nlm 03087-10820 (include length L)

Note:
Size M3 stop screw only available in grade 8.8.

Order No.	Form	D	L	K	SW	SR1
03087-103**	A	M3	16/25	2	5,5	-
03087-104**	A	M4	16/25/35	2,5	7	-
03087-105**	A	M5	16/25/35	3,5	8	-
03087-106**	A	M6	25/35/40	3,8	10	-
03087-108**	A	M8	12/16/20/25/30/35/40/45/50/55/65/70/85	5	13	-
03087-110**	A	M10	35/40/50/60	6	17	-
03087-112**	A	M12	40/60/70	7	19	-
03087-116**	A	M16	50/60/70	9,5	24	-
03087-203**	B	M3	16/25	2	5,5	10
03087-204**	B	M4	16/25/35	2,5	7	10
03087-205**	B	M5	16/25/35	3,5	8	12
03087-206**	B	M6	25/35/40	3,8	10	15
03087-208**	B	M8	12/16/20/25/30/35/40/45/50/55/65/70/85	5	13	20
03087-210**	B	M10	35/40/50/60	6	17	30
03087-212**	B	M12	40/60/70	7	19	30
03087-216**	B	M16	50/60/70	9,5	24	35

5D workpiece stops

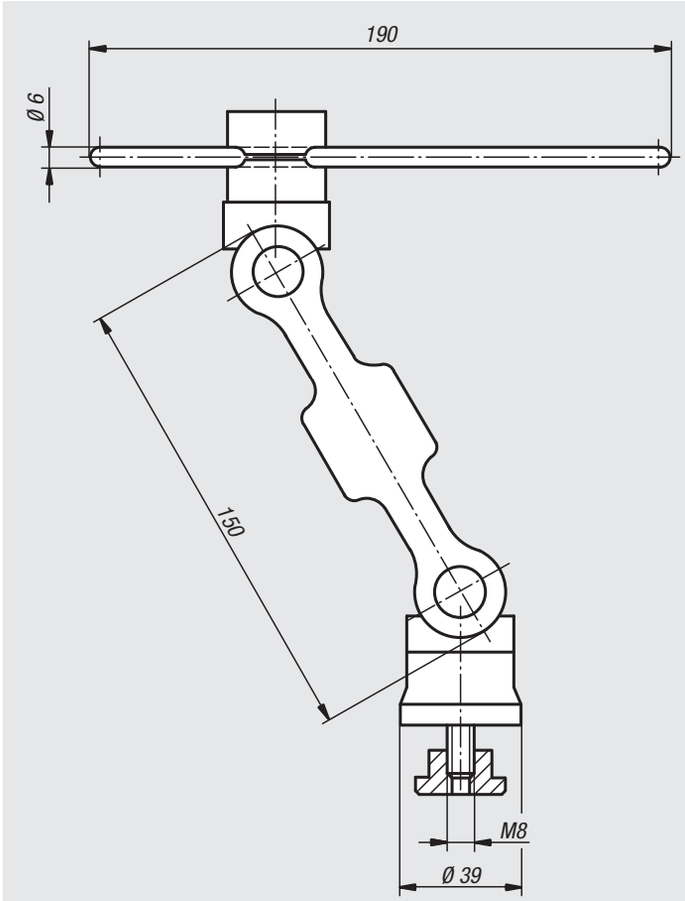

Material:
Clamping joint high-tensile aluminium.
Hinge pin, support plate and stop bar, steel.

Version:
Clamping joint anodized blue and black.
Hinge pins, support plate and stop bar black oxidised.

Sample order:
nlm 03088-15012

Note:
The 5D-swivelling stop serves, among other things, as a versatile instrument for positioning on machining tools or for assembly work. It is infinitely adjustable, quickly and flexibly in 5 axes. Supplied complete with M8x12 T-slot nut and hex key.

On request:
Connecting element for combining several 5D-swivelling stops.

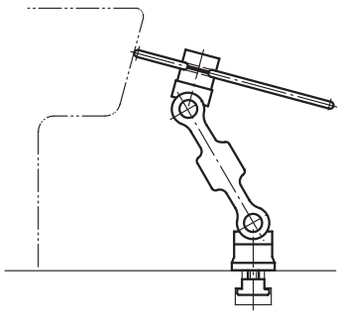

Order No.	Size
03088-15012	150

Indexing plungers

Material:
Steel version:
Grub screw and indexing pin steel.

Stainless-steel version:
Indexing pin hardened:
Threaded sleeve 1.4305.
Indexing pin 1.4034.

Indexing pin not hardened:
Threaded sleeve 1.4305.
Indexing pin 1.4305.

Mushroom grip black grey thermoplastic.

Version:
Steel version:
Threaded sleeve, black oxidised.
Indexing pin hardened, ground and black oxidised.

Stainless-steel version:
Indexing pin hardened, ground and bright. Threaded sleeve, bright.
Indexing pin not hardened, ground and bright.

Sample order:
nlm 03089-04206

Note:
Indexing plungers are used to prevent any change in locking position due to lateral forces. A new locking position can only be set after the pin has been manually disengaged. Form C or D is recommended for applications where the plunger remains disengaged over a long period and the pin should be prevented from springing back.

On request:
Special versions.

Accessories:
Spacer rings 03089

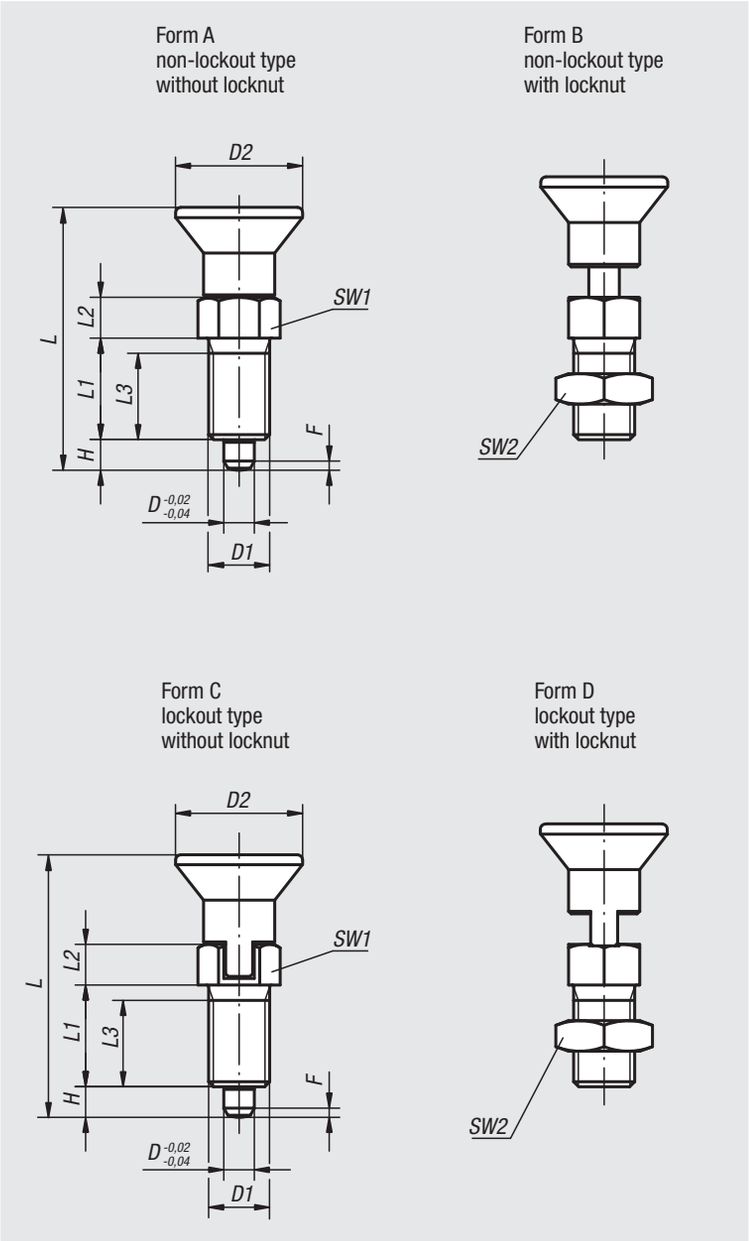

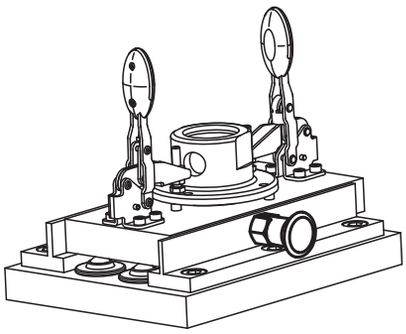

Indexing plungers

Indexing plungers, steel, indexing pin hardened

Order No. Form A	Order No. Form B	Order No. Form C	Order No. Form D	D	D1	D2	L	L1	L2	L3	H	SW1	SW2	Fx30°	Spring force initial pressure F1 approx. N	Spring force final pressure F2 approx. N
03089-1903	03089-2903	03089-3903	03089-4903	3	M6x0,75	14	31,5	12	5	10	3,5	8	-/10/-/10	0,8	4,5	10
03089-1004	03089-2004	03089-3004	03089-4004	4	M8x1	18	38,5	15	6	13	4	10	-/13/-/13	1	6	12
03089-1105	03089-2105	03089-3105	03089-4105	5	M10x1	21	43,5	17	7	15	5	13	-/17/-/17	1,3	5	12
03089-1206	03089-2206	03089-3206	03089-4206	6	M12x1,5	25	51,7	20	8	17	6	14	-/19/-/19	1,8	6	14
03089-1308	03089-2308	03089-3308	03089-4308	8	M16x1,5	33	68	26	10	23	8	19	-/24/-/24	2,3	15	35
03089-1410	03089-2410	03089-3410	03089-4410	10	M20x1,5	33	74	28	12	25	10	22	-/30/-/30	2,8	15	34
03089-1412	03089-2412	03089-3412	03089-4412	12	M20x1,5	33	78	28	14	25	12	22	-/30/-/30	2,8	15	39
03089-1516	03089-2516	03089-3516	03089-4516	16	M24x2	40	96	32	18	28	16	27	-/36/-/36	3,2	20	46

Indexing plungers, stainless steel, indexing pin hardened

Order No. Form A	Order No. Form B	Order No. Form C	Order No. Form D	D	D1	D2	L	L1	L2	L3	H	SW1	SW2	Fx30°	Spring force initial pressure F1 approx. N	Spring force final pressure F2 approx. N
03089-01903	03089-02903	03089-03903	03089-04903	3	M6x0,75	14	31,5	12	5	10	3,5	8	-/10/-/10	0,8	4,5	10
03089-01004	03089-02004	03089-03004	03089-04004	4	M8x1	18	38,5	15	6	13	4	10	-/13/-/13	1	6	12
03089-01105	03089-02105	03089-03105	03089-04105	5	M10x1	21	43,5	17	7	15	5	13	-/17/-/17	1,3	5	12
03089-01206	03089-02206	03089-03206	03089-04206	6	M12x1,5	25	51,7	20	8	17	6	14	-/19/-/19	1,8	6	14
03089-01308	03089-02308	03089-03308	03089-04308	8	M16x1,5	33	68	26	10	23	8	19	-/24/-/24	2,3	15	35
03089-01410	03089-02410	03089-03410	03089-04410	10	M20x1,5	33	74	28	12	25	10	22	-/30/-/30	2,8	15	34
03089-01412	03089-02412	03089-03412	03089-04412	12	M20x1,5	33	78	28	14	25	12	22	-/30/-/30	2,8	15	39
03089-01516	03089-02516	03089-03516	03089-04516	16	M24x2	40	96	32	18	28	16	27	-/36/-/36	3,2	20	46

Indexing plungers, stainless steel, indexing pin not hardened

Order No. Form A	Order No. Form B	Order No. Form C	Order No. Form D	D	D1	D2	L	L1	L2	L3	H	SW1	SW2	Fx30°	Spring force initial pressure F1 approx. N	Spring force final pressure F2 approx. N
03089-11903	03089-12903	03089-13903	03089-14903	3	M6x0,75	14	31,5	12	5	10	3,5	8	-/10/-/10	0,8	4,5	10
03089-11004	03089-12004	03089-13004	03089-14004	4	M8x1	18	38,5	15	6	13	4	10	-/13/-/13	1	6	12
03089-11105	03089-12105	03089-13105	03089-14105	5	M10x1	21	43,5	17	7	15	5	13	-/17/-/17	1,3	5	12
03089-11206	03089-12206	03089-13206	03089-14206	6	M12x1,5	25	51,7	20	8	17	6	14	-/19/-/19	1,8	6	14
03089-11308	03089-12308	03089-13308	03089-14308	8	M16x1,5	33	68	26	10	23	8	19	-/24/-/24	2,3	15	35
03089-11410	03089-12410	03089-13410	03089-14410	10	M20x1,5	33	74	28	12	25	10	22	-/30/-/30	2,8	15	34
03089-11412	03089-12412	03089-13412	03089-14412	12	M20x1,5	33	78	28	14	25	12	22	-/30/-/30	2,8	15	39
03089-11516	03089-12516	03089-13516	03089-14516	16	M24x2	40	96	32	18	28	16	27	-/36/-/36	3,2	20	46

Indexing plungers

Material:
Steel version:
Indexing pin hardened:
grade 5.8.

Stainless steel version,
Indexing pin hardened
Threaded sleeve 1.4305
Indexing pin 1.4034

Indexing pin not hardened
Threaded sleeve 1.4305
Indexing pin 1.4305

Mushroom knob red thermoplastic

Version:
Steel version:
Indexing pin hardened, ground, black oxidised.

Stainless steel version:
Indexing pin hardened, ground and bright.
Indexing pin not hardened, ground and bright.

Sample order:
nlm 03089-0420684

Note:
Indexing plungers are used to prevent any change in locking position due to lateral forces. A new locking position can only be set after the pin has been manually disengaged. Form C or D is recommended for applications where the plunger remains disengaged over a long period and the pin should be prevented from springing back.

On request:
Special versions.

Accessories:
Spacer rings 03089

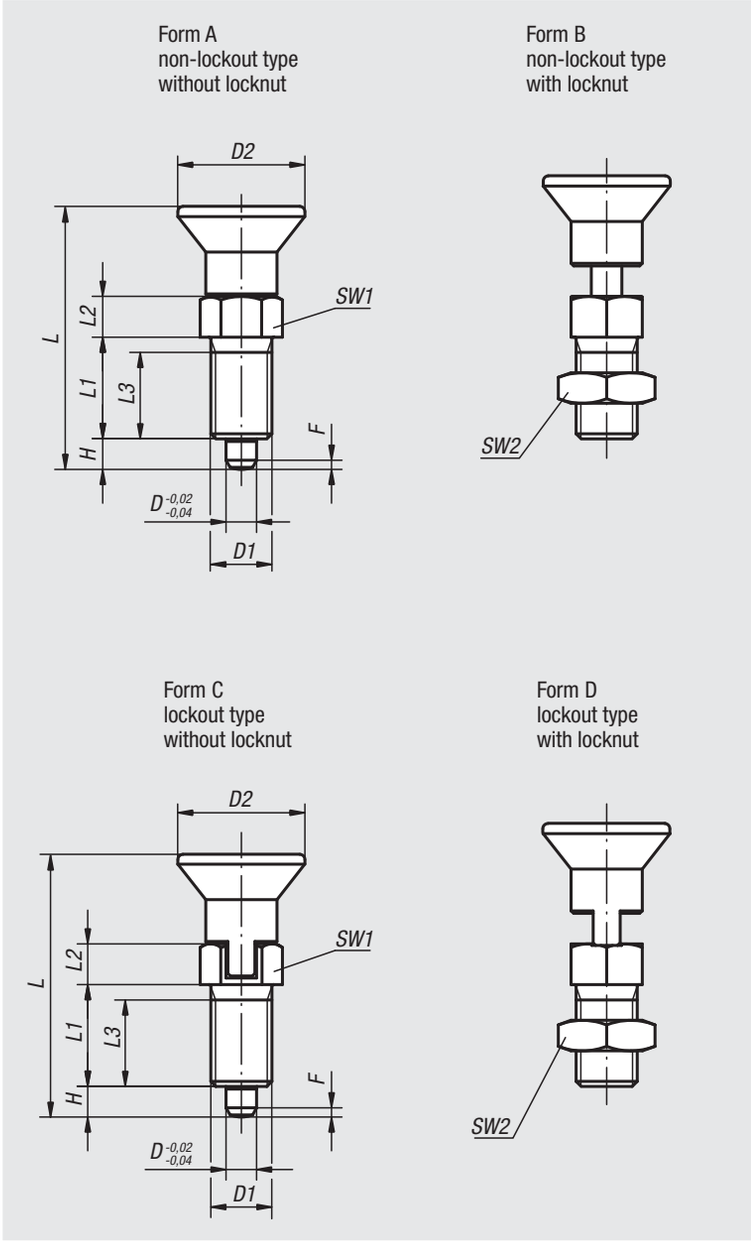

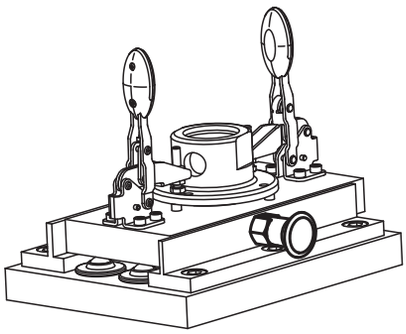

Indexing plungers

Indexing plungers, steel, indexing pin hardened

Order No. Form A	Order No. Form B	Order No. Form C	Order No. Form D	D	D1	D2	L	L1	L2	L3	H	SW1	SW2	Fx30°	Spring force initial pressure F1 approx. N	Spring force final pressure F2 approx. N
03089-190384	03089-290384	03089-390384	03089-490384	3	M6x0,75	14	31,5	12	5	10	3,5	8	-/10/-/10	0,8	4,5	10
03089-100484	03089-200484	03089-300484	03089-400484	4	M8x1	18	38,5	15	6	13	4	10	-/13/-/13	1	6	12
03089-110584	03089-210584	03089-310584	03089-410584	5	M10x1	21	43,5	17	7	15	5	13	-/17/-/17	1,3	5	12
03089-120684	03089-220684	03089-320684	03089-420684	6	M12x1,5	25	51,7	20	8	17	6	14	-/19/-/19	1,8	6	14
03089-130884	03089-230884	03089-330884	03089-430884	8	M16x1,5	33	68	26	10	23	8	19	-/24/-/24	2,3	15	35
03089-141084	03089-241084	03089-341084	03089-441084	10	M20x1,5	33	74	28	12	25	10	22	-/30/-/30	2,8	15	34
03089-141284	03089-241284	03089-341284	03089-441284	12	M20x1,5	33	78	28	14	25	12	22	-/30/-/30	2,8	15	39
03089-151684	03089-251684	03089-351684	03089-451684	16	M24x2	40	96	32	18	28	16	27	-/36/-/36	3,2	20	46

Indexing plungers, stainless steel, indexing pin hardened

Order No. Form A	Order No. Form B	Order No. Form C	Order No. Form D	D	D1	D2	L	L1	L2	L3	H	SW1	SW2	Fx30°	Spring force initial pressure F1 approx. N	Spring force final pressure F2 approx. N
03089-0190384	03089-0290384	03089-0390384	03089-0490384	3	M6x0,75	14	31,5	12	5	10	3,5	8	-/10/-/10	0,8	4,5	10
03089-0100484	03089-0200484	03089-0300484	03089-0400484	4	M8x1	18	38,5	15	6	13	4	10	-/13/-/13	1	6	12
03089-0110584	03089-0210584	03089-0310584	03089-0410584	5	M10x1	21	43,5	17	7	15	5	13	-/17/-/17	1,3	5	12
03089-0120684	03089-0220684	03089-0320684	03089-0420684	6	M12x1,5	25	51,7	20	8	17	6	14	-/19/-/19	1,8	6	14
03089-0130884	03089-0230884	03089-0330884	03089-0430884	8	M16x1,5	33	68	26	10	23	8	19	-/24/-/24	2,3	15	35
03089-0141084	03089-0241084	03089-0341084	03089-0441084	10	M20x1,5	33	74	28	12	25	10	22	-/30/-/30	2,8	15	34
03089-0141284	03089-0241284	03089-0341284	03089-0441284	12	M20x1,5	33	78	28	14	25	12	22	-/30/-/30	2,8	15	39
03089-0151684	03089-0251684	03089-0351684	03089-0451684	16	M24x2	40	96	32	18	28	16	27	-/36/-/36	3,2	20	46

Indexing plungers, stainless steel, indexing pin not hardened

Order No. Form A	Order No. Form B	Order No. Form C	Order No. Form D	D	D1	D2	L	L1	L2	L3	H	SW1	SW2	Fx30°	Spring force initial pressure F1 approx. N	Spring force final pressure F2 approx. N
03089-1190384	03089-1290384	03089-1390384	03089-1490384	3	M6x0,75	14	31,5	12	5	10	3,5	8	-/10/-/10	0,8	4,5	10
03089-1100484	03089-1200484	03089-1300484	03089-1400484	4	M8x1	18	38,5	15	6	13	4	10	-/13/-/13	1	6	12
03089-1110584	03089-1210584	03089-1310584	03089-1410584	5	M10x1	21	43,5	17	7	15	5	13	-/17/-/17	1,3	5	12
03089-1120684	03089-1220684	03089-1320684	03089-1420684	6	M12x1,5	25	51,7	20	8	17	6	14	-/19/-/19	1,8	6	14
03089-1130884	03089-1230884	03089-1330884	03089-1430884	8	M16x1,5	33	68	26	10	23	8	19	-/24/-/24	2,3	15	35
03089-1141084	03089-1241084	03089-1341084	03089-1441084	10	M20x1,5	33	74	28	12	25	10	22	-/30/-/30	2,8	15	34
03089-1141284	03089-1241284	03089-1341284	03089-1441284	12	M20x1,5	33	78	28	14	25	12	22	-/30/-/30	2,8	15	39
03089-1151684	03089-1251684	03089-1351684	03089-1451684	16	M24x2	40	96	32	18	28	16	27	-/36/-/36	3,2	20	46

Indexing plungers

with thread lock

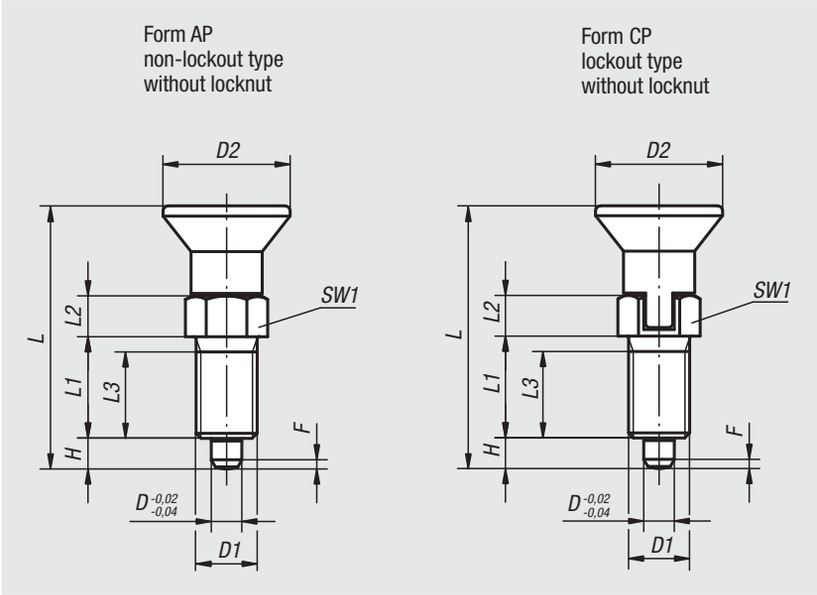

Material:
Steel version:
thread and indexing pin free-cutting steel

Stainless steel version:
indexing pin hardened:
threaded sleeve 1.4305
indexing pin 1.4034

Mushroom knob black grey thermoplastic.

Thread lock blue polyamide.

Version:
Steel version:
indexing pin hardened, ground and black oxidised.

Stainless steel version:
indexing pin hardened, ground and bright.

Sample order:
nlm 03089-091206

Note:
Indexing plungers are used to prevent any change in locking position due to lateral forces. A new locking position can only be set after the pin has been manually disengaged. Form CP is recommended for applications where the plunger remains disengaged over a long period and the pin should be prevented from springing back.
The screw lock allows the plunger to be screwed in to the exact depth required, no spacer ring is required.
The screw lock is a spotted-on polyamide coating that grips the screw flank.

On request:
Special versions.

Indexing plungers

with thread lock

Steel, indexing pin hardened

Order No. Form AP	Order No. Form CP	D	D1	D2	L	L1	L2	L3	H	SW1	Fx30°	Spring force initial pressure F1 approx. N	Spring force final pressure F2 approx. N
03089-91903	**03089-93903**	3	M6x0,75	14	31,5	12	5	10	3,5	8	0,8	4,5	10
03089-91004	**03089-93004**	4	M8x1	18	38,5	15	6	13	4	10	1	6	12
03089-91105	**03089-93105**	5	M10x1	21	43,5	17	7	15	5	13	1,3	5	12
03089-91206	**03089-93206**	6	M12x1,5	25	51,7	20	8	17	6	14	1,8	6	14
03089-91308	**03089-93308**	8	M16x1,5	33	68	26	10	23	8	19	2,3	15	35
03089-91410	**03089-93410**	10	M20x1,5	33	74	28	12	25	10	22	2,8	15	34
03089-91412	**03089-93412**	12	M20x1,5	33	78	28	14	25	12	22	2,8	15	39
03089-91516	**03089-93516**	16	M24x2	40	96	32	18	28	16	27	3,2	20	46

Stainless steel, indexing pin hardened

Order No. Form AP	Order No. Form CP	D	D1	D2	L	L1	L2	L3	H	SW1	Fx30°	Spring force initial pressure F1 approx. N	Spring force final pressure F2 approx. N
03089-091903	**03089-093903**	3	M6x0,75	14	31,5	12	5	10	3,5	8	0,8	4,5	10
03089-091004	**03089-093004**	4	M8x1	18	38,5	15	6	13	4	10	1	6	12
03089-091105	**03089-093105**	5	M10x1	21	43,5	17	7	15	5	13	1,3	5	12
03089-091206	**03089-093206**	6	M12x1,5	25	51,7	20	8	17	6	14	1,8	6	14
03089-091308	**03089-093308**	8	M16x1,5	33	68	26	10	23	8	19	2,3	15	35
03089-091410	**03089-093410**	10	M20x1,5	33	74	28	12	25	10	22	2,8	15	34
03089-091412	**03089-093412**	12	M20x1,5	33	78	28	14	25	12	22	2,8	15	39
03089-091516	**03089-093516**	16	M24x2	40	96	32	18	28	16	27	3,2	20	46

Indexing plungers

with extended indexing pin

Material:
Steel version:
Indexing pin hardened:
grade 5.8.

Stainless steel version,
Indexing pin hardened
Threaded sleeve 1.4305
Indexing pin 1.4034

Indexing pin not hardened
Threaded sleeve 1.4305
Indexing pin 1.4305

Mushroom knob black grey thermoplastic

Version:
Steel version:
Indexing pin hardened, ground, black oxidised.

Stainless steel version:
Indexing pin hardened, ground and bright.
Indexing pin not hardened, ground and bright.

Sample order:
nlm 03089-21004

Note:
Indexing plungers are used to prevent any change in locking position due to lateral forces. A new locking position can only be set after the pin has been manually disengaged.

On request:
Special versions.

Accessories:
Spacer rings 03089

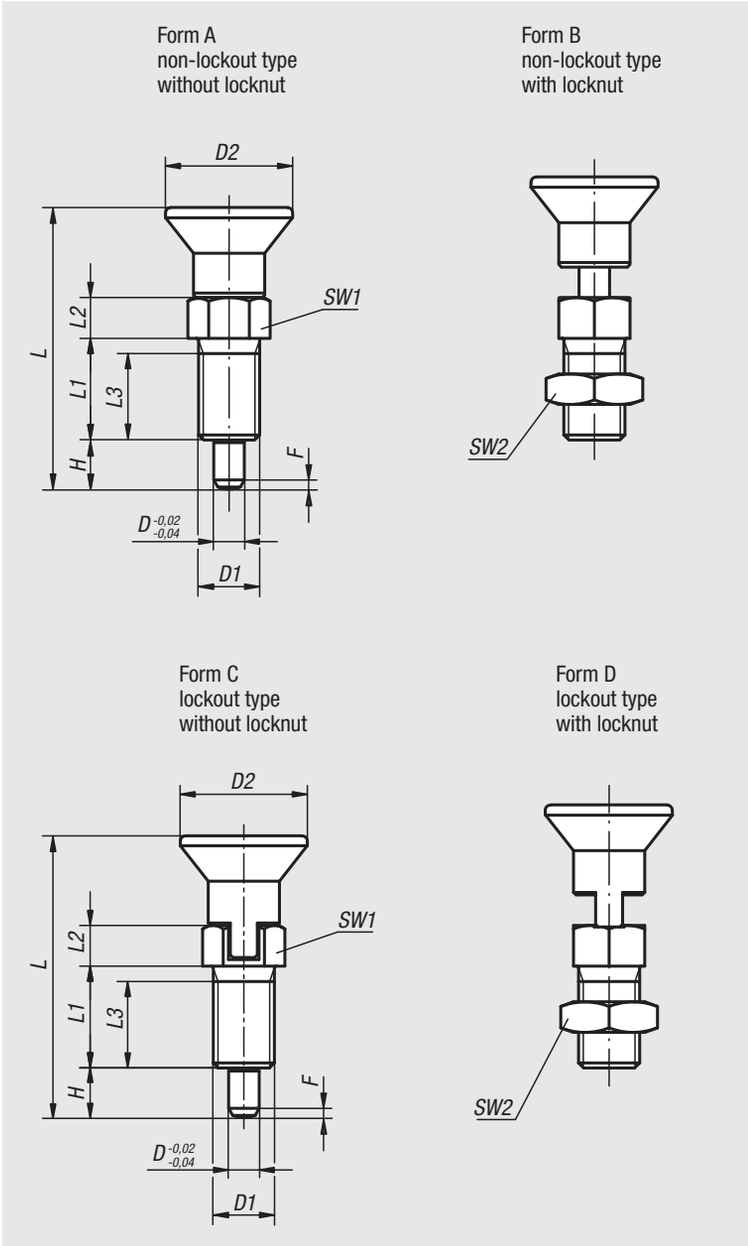

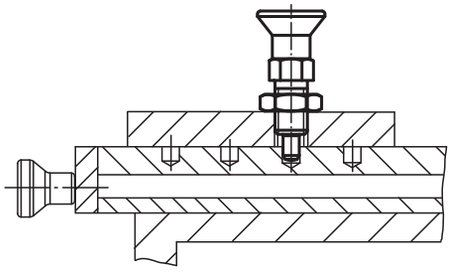

Indexing plungers with extended indexing pins, steel, indexing pins hardened

Order No. Form A	Order No. Form B	D	D1	D2	L	L1	L2	L3	H	SW1	SW2	Fx30°	Spring force initial pressure F1 approx. N	Spring force final pressure F2 approx. N
03089-21903	03089-22903	3	M6x0,75	14	33	12	5	10	5	8	-/10	0,8	4,5	12
03089-21004	03089-22004	4	M8x1	18	40,5	15	6	13	6	10	-/13	1	6	15
03089-21105	03089-22105	5	M10x1	21	46,5	17	7	15	8	13	-/17	1,3	5	16
03089-21206	03089-22206	6	M12x1,5	25	54,7	20	8	17	9	14	-/19	1,8	6	18
03089-21308	03089-22308	8	M16x1,5	33	72	26	10	23	12	19	-/24	2,3	15	45
03089-21410	03089-22410	10	M20x1,5	33	79	28	12	25	15	22	-/30	2,8	15	43
03089-21412	03089-22412	12	M20x1,5	33	84	28	14	25	18	22	-/30	2,8	15	51
03089-21516	03089-22516	16	M24x2	40	104	32	18	28	24	27	-/36	3,2	20	60

Order No. Form C	Order No. Form D	D	D1	D2	L	L1	L2	L3	H	SW1	SW2	Fx30°	Spring force initial pressure F1 approx. N	Spring force final pressure F2 approx. N
03089-23105	03089-24105	5	M10x1	21	49,5	17	10	15	8	13	-/17	1,3	5	16
03089-23206	03089-24206	6	M12x1,5	25	57,7	20	11	17	9	14	-/19	1,8	6	18
03089-23308	03089-24308	8	M16x1,5	33	76	26	14	23	12	19	-/24	2,3	15	45

Indexing plungers with extended indexing pins, stainless steel, indexing pins hardened

Order No. Form A	Order No. Form B	D	D1	D2	L	L1	L2	L3	H	SW1	SW2	Fx30°	Spring force initial pressure F1 approx. N	Spring force final pressure F2 approx. N
03089-201903	03089-202903	3	M6x0,75	14	33	12	5	10	5	8	-/10	0,8	4,5	12
03089-201004	03089-202004	4	M8x1	18	40,5	15	6	13	6	10	-/13	1	6	15
03089-201105	03089-202105	5	M10x1	21	46,5	17	7	15	8	13	-/17	1,3	5	16
03089-201206	03089-202206	6	M12x1,5	25	54,7	20	8	17	9	14	-/19	1,8	6	18
03089-201308	03089-202308	8	M16x1,5	33	72	26	10	23	12	19	-/24	2,3	15	45
03089-201410	03089-202410	10	M20x1,5	33	79	28	12	25	15	22	-/30	2,8	15	43
03089-201412	03089-202412	12	M20x1,5	33	84	28	14	25	18	22	-/30	2,8	15	51
03089-201516	03089-202516	16	M24x2	40	104	32	18	28	24	27	-/36	3,2	20	60

Order No. Form C	Order No. Form D	D	D1	D2	L	L1	L2	L3	H	SW1	SW2	Fx30°	Spring force initial pressure F1 approx. N	Spring force final pressure F2 approx. N
03089-203105	03089-204105	5	M10x1	21	49,5	17	10	15	8	13	-/17	1,3	5	16
03089-203206	03089-204206	6	M12x1,5	25	57,7	20	11	17	9	14	-/19	1,8	6	18
03089-203308	03089-204308	8	M16x1,5	33	76	26	14	23	12	19	-/24	2,3	15	45

Indexing plungers with extended indexing pins, stainless steel, indexing pins not hardened

Order No. Form A	Order No. Form B	D	D1	D2	L	L1	L2	L3	H	SW1	SW2	Fx30°	Spring force initial pressure F1 approx. N	Spring force final pressure F2 approx. N
03089-211903	03089-212903	3	M6x0,75	14	33	12	5	10	5	8	-/10	0,8	4,5	12
03089-211004	03089-212004	4	M8x1	18	40,5	15	6	13	6	10	-/13	1	6	15
03089-211105	03089-212105	5	M10x1	21	46,5	17	7	15	8	13	-/17	1,3	5	16
03089-211206	03089-212206	6	M12x1,5	25	54,7	20	8	17	9	14	-/19	1,8	6	18
03089-211308	03089-212308	8	M16x1,5	33	72	26	10	23	12	19	-/24	2,3	15	45
03089-211410	03089-212410	10	M20x1,5	33	79	28	12	25	15	22	-/30	2,8	15	43
03089-211412	03089-212412	12	M20x1,5	33	84	28	14	25	18	22	-/30	2,8	15	51
03089-211516	03089-212516	16	M24x2	40	104	32	18	28	24	27	-/36	3,2	20	60

Order No. Form C	Order No. Form D	D	D1	D2	L	L1	L2	L3	H	SW1	SW2	Fx30°	Spring force initial pressure F1 approx. N	Spring force final pressure F2 approx. N
03089-213105	03089-214105	5	M10x1	21	49,5	17	10	15	8	13	-/17	1,3	5	16
03089-213206	03089-214206	6	M12x1,5	25	57,7	20	11	17	9	14	-/19	1,8	6	18
03089-213308	03089-214308	8	M16x1,5	33	76	26	14	23	12	19	-/24	2,3	15	45

Indexing plungers

short version

Material:
Steel version:
Indexing pin hardened:
grade 5.8

Stainless steel version:
Indexing pin not hardened
Threaded sleeve 1.4305
Indexing pin 1.4305

Mushroom knob black grey thermoplastic.

Version:
Steel version:
Indexing pin hardened, ground, black oxidised.

Stainless steel version:
Indexing pin not hardened, ground, bright.

Sample order:
nlm 03089-16206

Note:
Indexing plungers are used to prevent any change in position due to lateral forces. A new locking position can only be set after the pin has been manually disengaged. Form C or D is recommended for applications in which the pin is disengaged over extended periods and should be prevented from springing back.

On request:
Special versions.

Accessories:
Spacer rings 03089

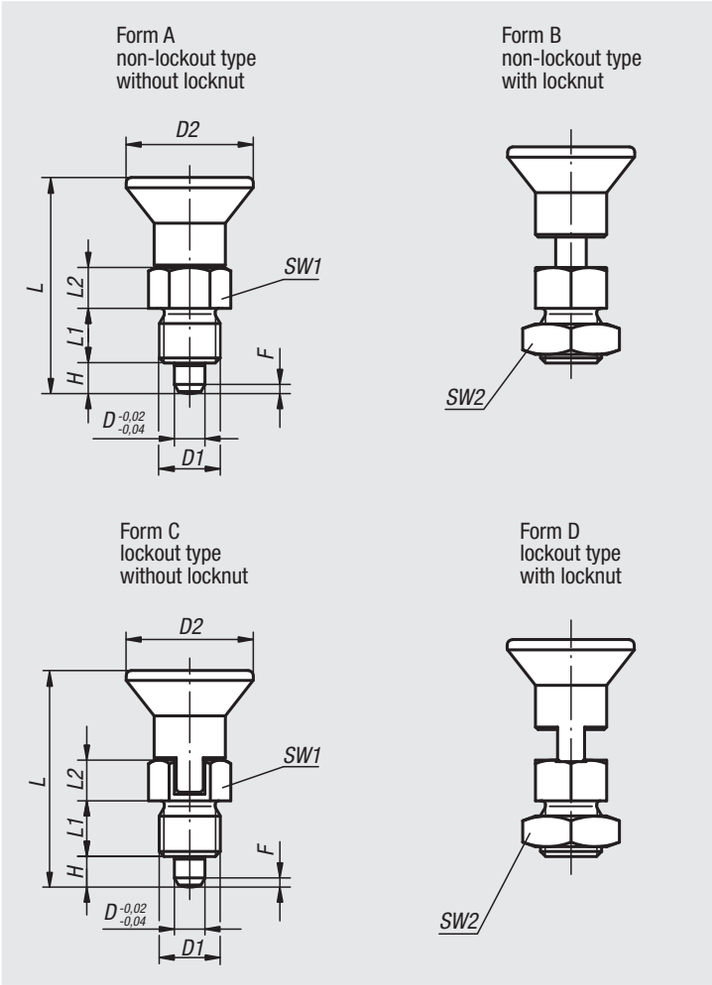

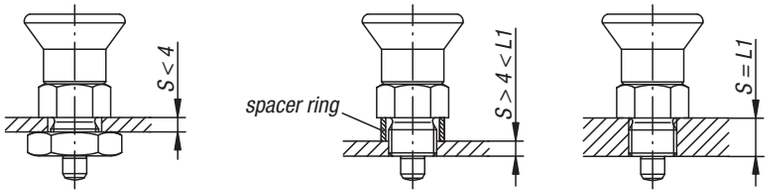

Indexing plungers

short version

Indexing plungers, short version, steel, indexing pin hardened

Order No. Form A	Order No. Form B	Order No. Form C	Order No. Form D	D	D1	D2	L	L1	L2	H	SW1	SW2	Fx30°	Spring force initial pressure F1 approx. N	Spring force final pressure F2 approx. N
03089-5903	03089-6903	03089-7903	03089-8903	3	M6x0,75	14	25,5	6	5	3,5	8	-/10/-/10	0,8	4	10
03089-5004	03089-6004	03089-7004	03089-8004	4	M8x1	18	29,5	6	6	4	10	-/13/-/13	1	4	12
03089-5105	03089-6105	03089-7105	03089-8105	5	M10x1	21	34,5	8	7	5	13	-/17/-/17	1,3	5	12
03089-5206	03089-6206	03089-7206	03089-8206	6	M12x1,5	25	41,7	10	8	6	14	-/19/-/19	1,8	6	14
03089-5308	03089-6308	03089-7308	03089-8308	8	M16x1,5	33	54	12	10	8	19	-/24/-/24	2,3	14	28
03089-5410	03089-6410	03089-7410	03089-8410	10	M20x1,5	33	61	15	12	10	22	-/30/-/30	2,8	15	32

Indexing plungers, short version, stainless steel, indexing pin not hardened

Order No. Form A	Order No. Form B	Order No. Form C	Order No. Form D	D	D1	D2	L	L1	L2	H	SW1	SW2	Fx30°	Spring force initial pressure F1 approx. N	Spring force final pressure F2 approx. N
03089-15903	03089-16903	03089-17903	03089-18903	3	M6x0,75	14	25,5	6	5	3,5	8	-/10/-/10	0,8	4	10
03089-15004	03089-16004	03089-17004	03089-18004	4	M8x1	18	29,5	6	6	4	10	-/13/-/13	1	4	12
03089-15105	03089-16105	03089-17105	03089-18105	5	M10x1	21	34,5	8	7	5	13	-/17/-/17	1,3	5	12
03089-15206	03089-16206	03089-17206	03089-18206	6	M12x1,5	25	41,7	10	8	6	14	-/19/-/19	1,8	6	14
03089-15308	03089-16308	03089-17308	03089-18308	8	M16x1,5	33	54	12	10	8	19	-/24/-/24	2,3	14	28
03089-15410	03089-16410	03089-17410	03089-18410	10	M20x1,5	33	61	15	12	10	22	-/30/-/30	2,8	15	32

Indexing plungers

short version

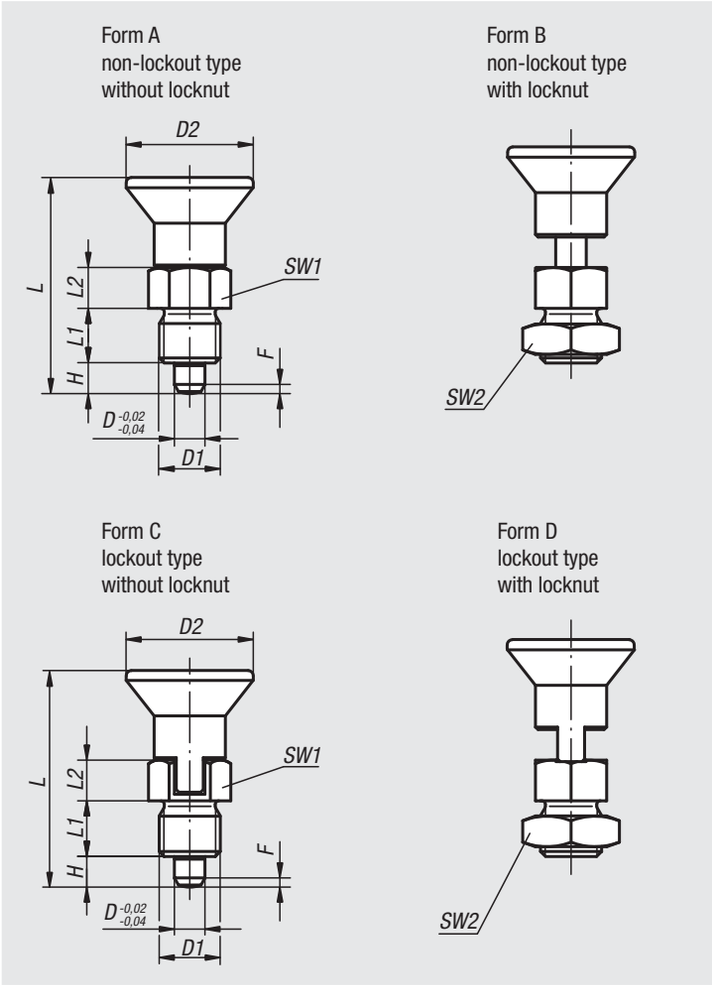

Material:
Steel version:
Indexing pin hardened:
grade 5.8.

Stainless steel version,
Indexing pin not hardened
Threaded sleeve 1.4305
Indexing pin 1.4305

Mushroom knob red thermoplastic

Version:
Steel version:
Indexing pin hardened, ground, black oxidised.

Stainless steel version:
Indexing pin not hardened, ground, bright.

Sample order:
nlm 03089-1620684

Note:
Indexing plungers are used to prevent any change in position due to lateral forces. A new locking position can only be set after the pin has been manually disengaged. Form C or D is recommended for applications in which the pin is disengaged over extended periods and should be prevented from springing back.

On request:
Special versions.

Accessories:
Spacer rings 03089

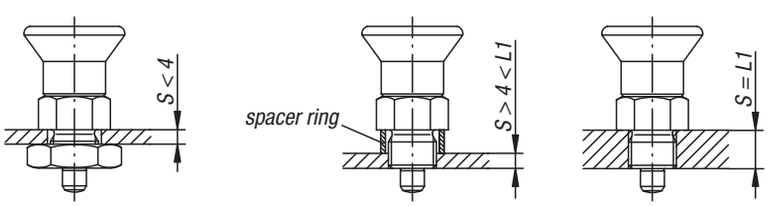

Indexing plungers

short version

Indexing plungers, short version, steel, indexing pin hardened

Order No. Form A	Order No. Form B	Order No. Form C	Order No. Form D	D	D1	D2	L	L1	L2	H	SW1	SW2	Fx30°	Spring force initial pressure F1 approx. N	Spring force final pressure F2 approx. N
03089-590384	03089-690384	03089-790384	03089-890384	3	M6x0,75	14	25,5	6	5	3,5	8	-/10/-/10	0,8	4	10
03089-500484	03089-600484	03089-700484	03089-800484	4	M8x1	18	29,5	6	6	4	10	-/13/-/13	1	4	12
03089-510584	03089-610584	03089-710584	03089-810584	5	M10x1	21	34,5	8	7	5	13	-/17/-/17	1,3	5	12
03089-520684	03089-620684	03089-720684	03089-820684	6	M12x1,5	25	41,7	10	8	6	14	-/19/-/19	1,8	6	14
03089-530884	03089-630884	03089-730884	03089-830884	8	M16x1,5	33	54	12	10	8	19	-/24/-/24	2,3	14	28
03089-541084	03089-641084	03089-741084	03089-841084	10	M20x1,5	33	61	15	12	10	22	-/30/-/30	2,8	15	32

Indexing plungers, short version, stainless steel, indexing pin not hardened

Order No. Form A	Order No. Form B	Order No. Form C	Order No. Form D	D	D1	D2	L	L1	L2	H	SW1	SW2	Fx30°	Spring force initial pressure F1 approx. N	Spring force final pressure F2 approx. N
03089-1590384	03089-1690384	03089-1790384	03089-1890384	3	M6x0,75	14	25,5	6	5	3,5	8	-/10/-/10	0,8	4	10
03089-1500484	03089-1600484	03089-1700484	03089-1800484	4	M8x1	18	29,5	6	6	4	10	-/13/-/13	1	4	12
03089-1510584	03089-1610584	03089-1710584	03089-1810584	5	M10x1	21	34,5	8	7	5	13	-/17/-/17	1,3	5	12
03089-1520684	03089-1620684	03089-1720684	03089-1820684	6	M12x1,5	25	41,7	10	8	6	14	-/19/-/19	1,8	6	14
03089-1530884	03089-1630884	03089-1730884	03089-1830884	8	M16x1,5	33	54	12	10	8	19	-/24/-/24	2,3	14	28
03089-1541084	03089-1641084	03089-1741084	03089-1841084	10	M20x1,5	33	61	15	12	10	22	-/30/-/30	2,8	15	32

Indexing plungers

short version, with thread lock

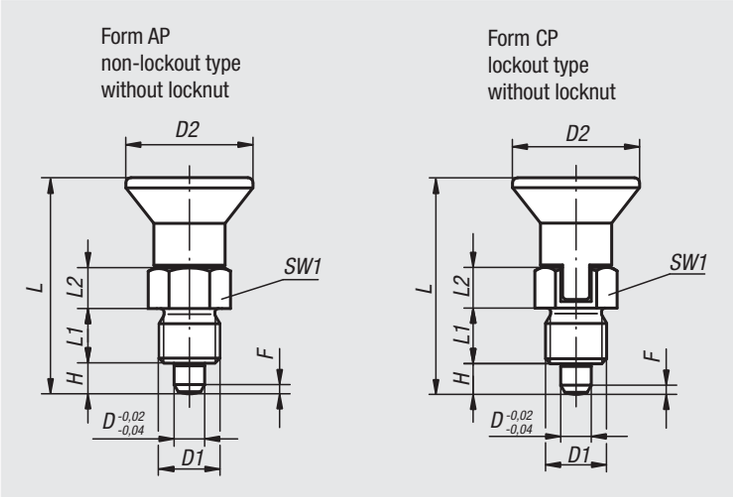

Material:
Steel version:
thread and indexing pin free-cutting steel

Stainless steel version:
indexing pin not hardened:
threaded sleeve 1.4305
indexing pin 1.4305

Mushroom knob black grey thermoplastic.

Thread lock blue polyamide.

Version:
Steel version:
Indexing pin hardened, ground, black oxidised.

Stainless steel version:
Indexing pin not hardened, ground, bright.

Sample order:
nlm 03089-95903

Note:
Indexing plungers are used to prevent any change in locking position due to lateral forces. A new locking position can only be set after the pin has been manually disengaged. Form CP is recommended for applications where the plunger remains disengaged over a long period and the pin should be prevented from springing back.
The screw lock allows the plunger to be screwed in to the exact depth required, no spacer ring is required.
The screw lock is a spotted-on polyamide coating that grips the screw flank.

On request:
Special versions.

Accessories:
Spacer rings 03089

Indexing plungers

short version, with thread lock

Steel, indexing pin hardened

Order No. Form AP	Order No. Form CP	D	D1	D2	L	L1	L2	H	SW1	Fx30°	Spring force initial pressure F1 approx. N	Spring force final pressure F2 approx. N
03089-95903	**03089-97903**	3	M6x0,75	14	25,5	6	6	3,5	8	0,8	4	10
03089-95004	**03089-97004**	4	M8x1	18	29,5	6	6	4	10	1	4	12
03089-95105	**03089-97105**	5	M10x1	21	34,5	8	7	5	13	1,3	5	12
03089-95206	**03089-97206**	6	M12x1,5	25	41,7	10	8	6	14	1,8	6	14
03089-95308	**03089-97308**	8	M16x1,5	33	54	12	10	8	19	2,3	14	28
03089-95410	**03089-97410**	10	M20x1,5	33	61	15	12	10	22	2,8	15	32

Stainless steel, indexing pin not hardened

Order No. Form AP	Order No. Form CP	D	D1	D2	L	L1	L2	H	SW1	Fx30°	Spring force initial pressure F1 approx. N	Spring force final pressure F2 approx. N
03089-195903	**03089-197903**	3	M6x0,75	14	25,5	6	6	3,5	8	0,8	4	10
03089-195004	**03089-197004**	4	M8x1	18	29,5	6	6	4	10	1	4	12
03089-195105	**03089-197105**	5	M10x1	21	34,5	8	7	5	13	1,3	5	12
03089-195206	**03089-197206**	6	M12x1,5	25	41,7	10	8	6	14	1,8	6	14
03089-195308	**03089-197308**	8	M16x1,5	33	54	12	10	8	19	2,3	14	28
03089-195410	**03089-197410**	10	M20x1,5	33	61	15	12	10	22	2,8	15	32

Indexing plungers stainless steel

Material:
Indexing pin hardened:
Threaded sleeve 1.4305.
Indexing pin 1.4034.

Indexing pin not hardened:
Threaded sleeve 1.4305.
Indexing pin 1.4305.

Mushroom knob 1.4305, electrolytic-polish.

Version:
Bright.
Indexing pin ground.

Sample order:
nlm 03089-001004

Note:
Indexing plungers are used to prevent any change in locking position due to lateral forces. A new locking position can only be set after the pin has been manually disengaged. Form C or D is recommended for applications in which the pin is disengaged over extended periods and should be prevented from springing back.

On request:
Special versions.

Accessories:
Spacer rings 03089

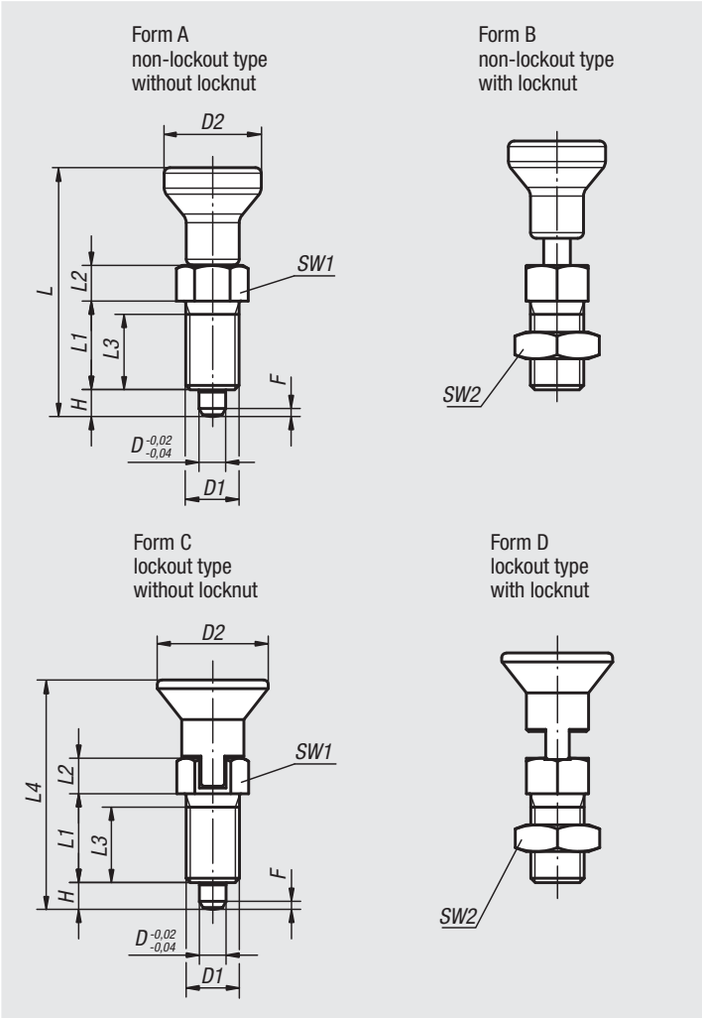

Indexing plungers stainless steel, indexing pin hardened

Order No. Form A	Order No. Form B	Order No. Form C	Order No. Form D	D	D1	D2	L	L1	L2	L3	H	SW1	SW2	Fx30°	Spring force initial pressure F1 approx. N	Spring force final pressure F2 approx. N	L4
03089-001903	03089-002903	03089-003903	03089-004903	3	M6x0,75	14	34,5/-	12	5	10	3,5	8	-/10/-/10	0,8	4,5	10	-/-/31,5/31,5
03089-001004	03089-002004	03089-003004	03089-004004	4	M8x1	18	43/-	15	6	13	4	10	-/13/-/13	1	6	12	-/-/38,5/38,5
03089-001105	03089-002105	03089-003105	03089-004105	5	M10x1	21	50/-	17	7	15	5	13	-/17/-/17	1,3	5	12	-/-/43,5/43,5
03089-001206	03089-002206	03089-003206	03089-004206	6	M12x1,5	25	59/-	20	8	17	6	14	-/19/-/19	1,8	6	14	-/-/51,7/51,7
03089-001308	03089-002308	03089-003308	03089-004308	8	M16x1,5	33	77/-	26	10	23	8	19	-/24/-/24	2,3	15	35	-/-/68/68
03089-001410	03089-002410	03089-003410	03089-004410	10	M20x1,5	33	83/-	28	12	25	10	22	-/30/-/30	2,8	15	34	-/-/74/74
03089-001412	03089-002412	03089-003412	03089-004412	12	M20x1,5	33	87/-	28	14	25	12	22	-/30/-/30	2,8	15	39	-/-/78/78
03089-001516	03089-002516	03089-003516	03089-004516	16	M24x2	40	106/-	32	18	28	16	27	-/36/-/36	3,2	20	46	-/-/96/96

Indexing plungers stainless steel, indexing pin not hardened

Order No. Form A	Order No. Form B	Order No. Form C	Order No. Form D	D	D1	D2	L	L1	L2	L3	H	SW1	SW2	Fx30°	Spring force initial pressure F1 approx. N	Spring force final pressure F2 approx. N	L4
03089-111903	03089-112903	03089-113903	03089-114903	3	M6x0,75	14	34,5/-	12	5	10	3,5	8	-/10/-/10	0,8	4,5	10	-/-/31,5/31,5
03089-111004	03089-112004	03089-113004	03089-114004	4	M8x1	18	43/-	15	6	13	4	10	-/13/-/13	1	6	12	-/-/38,5/38,5
03089-111105	03089-112105	03089-113105	03089-114105	5	M10x1	21	50/-	17	7	15	5	13	-/17/-/17	1,3	5	12	-/-/43,5/43,5
03089-111206	03089-112206	03089-113206	03089-114206	6	M12x1,5	25	59/-	20	8	17	6	14	-/19/-/19	1,8	6	14	-/-/51,7/51,7
03089-111308	03089-112308	03089-113308	03089-114308	8	M16x1,5	33	77/-	26	10	23	8	19	-/24/-/24	2,3	15	35	-/-/68/68
03089-111410	03089-112410	03089-113410	03089-114410	10	M20x1,5	33	83/-	28	12	25	10	22	-/30/-/30	2,8	15	34	-/-/74/74
03089-111412	03089-112412	03089-113412	03089-114412	12	M20x1,5	33	87/-	28	14	25	12	22	-/30/-/30	2,8	15	39	-/-/78/78
03089-111516	03089-112516	03089-113516	03089-114516	16	M24x2	40	106/-	32	18	28	16	27	-/36/-/36	3,2	20	46	-/-/96/96

Indexing plungers

for thin-walled parts

Material:
Steel version:
Indexing pin hardened:
grade 5.8

Stainless steel version:
Indexing pin not hardened
Threaded sleeve 1.4305
Indexing pin 1.4305

Mushroom knob black grey thermoplastic.

Version:
Steel version:
Indexing pin hardened, ground, black oxidised.

Stainless steel version:
Indexing pin not hardened, ground, bright.

Sample order:
nlm 03089-31105 (indexing plunger)
nlm 03089-91416 (ring spanner)

Note:
These indexing plungers are especially well-suited for assembly in thin-walled parts.
Indexing plungers are used where any change in locking position due to lateral forces should be prevented. A new locking position can be set only after the pin has been manually disengaged.
Form C is recommended for applications where the locking pin should remain disengaged for an extended period and be prevented from springing back.

Accessories:
A double-ended ring spanner can be supplied as an accessory to tighten the nut.

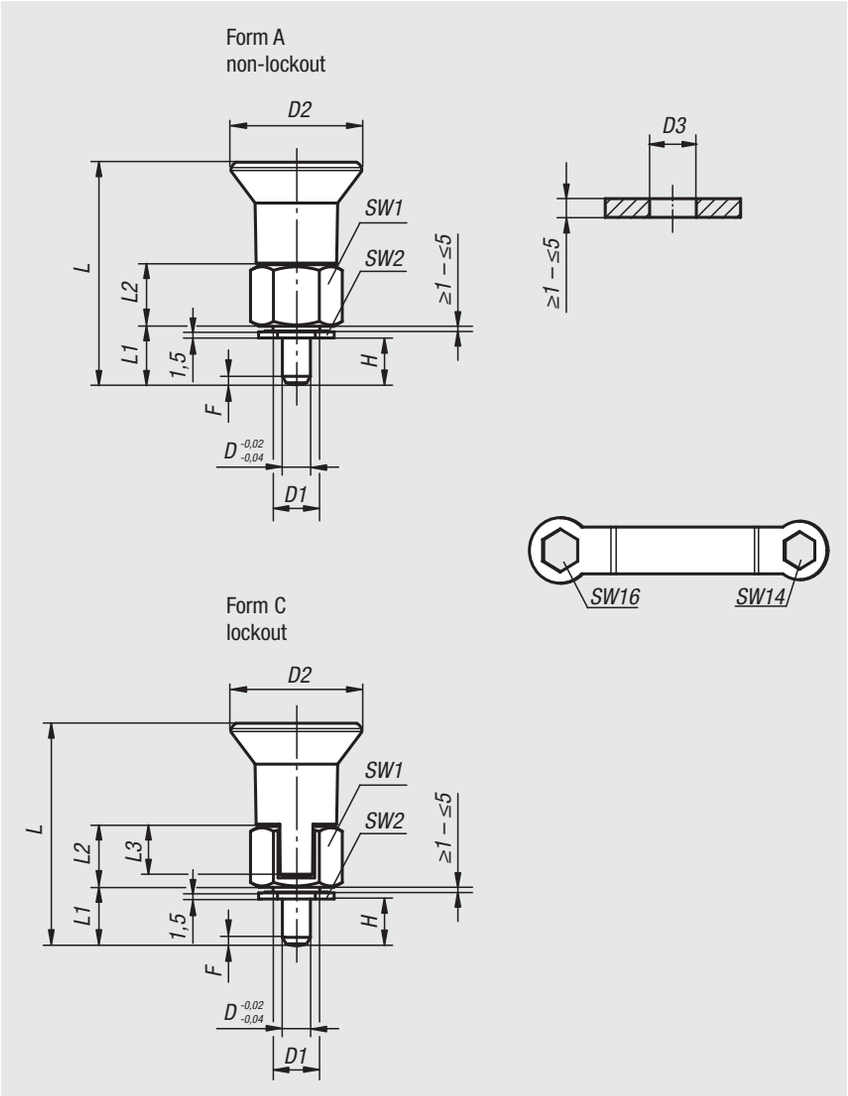

Indexing plungers for thin-walled parts, steel, indexing pin hardened

Order No.	Form	D	D1	D2	D3	L	L1	L2	L3	H	SW1	SW2	Fx30°	Spring force initial pressure F1 approx. N	Spring force final pressure F2 approx. N	Article number double-ended ring spanner
03089-31105	A	5	M10x1	28	10	46,5	11,5	13	10,5	5-9	17	14	1,3	6	15	03089-91416
03089-31206	A	6	M10x1	28	10	47,5	12,5	13	10,5	6-10	17	14	1,8	7	19	03089-91416
03089-33105	C	5	M10x1	28	10	46,5	11,5	13	10,5	5-9	17	14	1,3	6	15	03089-91416
03089-33206	C	6	M10x1	28	10	47,5	12,5	13	10,5	6-10	17	14	1,8	7	19	03089-91416

Indexing plungers for thin-walled parts, stainless steel, indexing pin not hardened

Order No.	Form	D	D1	D2	D3	L	L1	L2	L3	H	SW1	SW2	Fx30°	Spring force initial pressure F1 approx. N	Spring force final pressure F2 approx. N	Article number double-ended ring spanner
03089-311105	A	5	M10x1	28	10	46,5	11,5	13	10,5	5-9	17	14	1,3	6	15	03089-91416
03089-311206	A	6	M10x1	28	10	47,5	12,5	13	10,5	6-10	17	14	1,8	7	19	03089-91416
03089-313105	C	5	M10x1	28	10	46,5	11,5	13	10,5	5-9	17	14	1,3	6	15	03089-91416
03089-313206	C	6	M10x1	28	10	47,5	12,5	13	10,5	6-10	17	14	1,8	7	19	03089-91416

Indexing plungers - Premium

with cylindrical pin

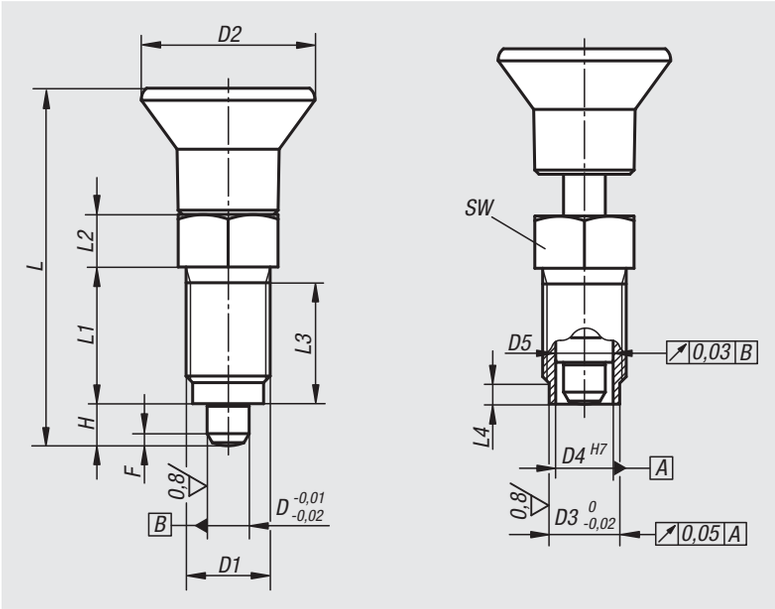

Material:
Steel version:
indexing pin hardened:
grade 5.8

Stainless steel version:
indexing pin hardened
threaded sleeve 1.4305
indexing pin 1.4034

Mushroom knob black grey thermoplastic.

Version:
Steel version:
indexing pin hardened, ground and black oxidised.

Stainless steel version:
indexing pin hardened, ground and bright.

Sample order:
nlm 03089-41105

Note:
Premium indexing plungers are characterized by more stringent manufacturing requirements for the indexing plungers and threaded sleeve. In addition, a centring locator that can be used to increase the positioning accuracy is provided on the threaded sleeve. These indexing plungers are used when it is necessary to prevent shifting of the locked position by transverse forces and greater positioning accuracy is required. A new locking position can only be set after the pin has been manually disengaged. When high lateral forces are to be expected, the centring locator should be used.

Fixation with bush:

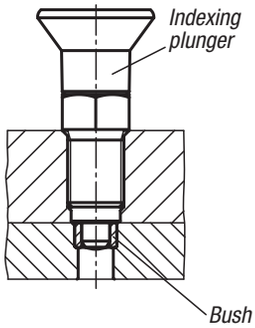

Fixation without bush:

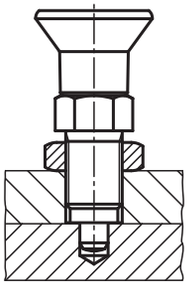

Assembly:
When using the threaded sleeve centring, it is recommended the receiving reamed hole be machined before tapping.

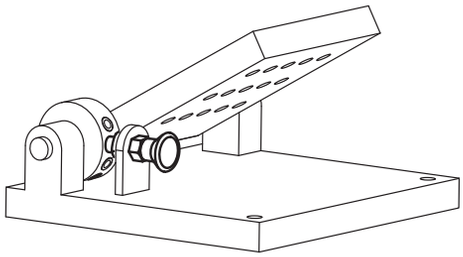

On request:
Special versions and spacer rings.

Accessories:
Matching cylindrical bush 03089.
Locknut 07212-….

Order No.	Main material	D	D1	D2	D3	D4	D5	L	L1	L2	L3	L4	H	SW	Fx30°	Spring force initial pressure F1 approx. N	Spring force final pressure F2 approx. N
03089-41105	steel	5	M10x1	21	8	6	6 -0,01/-0,02	43,5	17	7	15	3	5	13	1,3	5	12
03089-41206	steel	6	M12x1,5	25	10	8,5	8,5 -0,01/-0,03	51,7	20	8	17	3	6	14	1,8	6	14
03089-41308	steel	8	M16x1,5	33	13,5	11	11 -0,01/-0,03	68	26	10	23	4	8	19	2,3	15	35
03089-41410	steel	10	M20x1,5	33	17	11	11 -0,01/-0,03	74	28	12	25	4	10	22	2,8	15	34

Order No.	Main material	D	D1	D2	D3	D4	D5	L	L1	L2	L3	L4	H	SW	Fx30°	Spring force initial pressure F1 approx. N	Spring force final pressure F2 approx. N
03089-401105	stainless steel	5	M10x1	21	8	6	6 -0,01/-0,02	43,5	17	7	15	3	5	13	1,3	5	12
03089-401206	stainless steel	6	M12x1,5	25	10	8,5	8,5 -0,01/-0,03	51,7	20	8	17	3	6	14	1,8	6	14
03089-401308	stainless steel	8	M16x1,5	33	13,5	11	11 -0,01/-0,03	68	26	10	23	4	8	19	2,3	15	35
03089-401410	stainless steel	10	M20x1,5	33	17	11	11 -0,01/-0,03	74	28	12	25	4	10	22	2,8	15	34

Bushes cylindrical

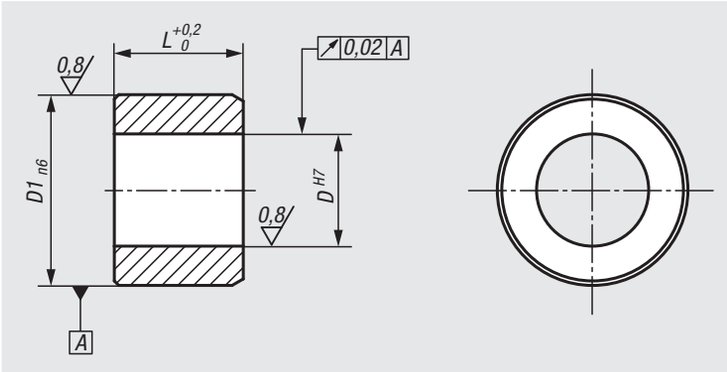

Material:
Steel or stainless steel 1.4034.

Version:
Steel version:
black oxidised, hardened and ground.
Stainless steel version:
bright, hardened and ground.

Sample order:
nlm 03089-9005

Note:
Bush for premium indexing plungers with cylindrical indexing pin 03089.

Assembly:
To increase the coaxial alignment accuracy, the hole for the bush and the premium indexing plunger can be machined simultaniously.

Order No.	Main material	D	D1	L
03089-9005	steel	5	8	6
03089-9006	steel	6	10	7
03089-9008	steel	8	13,5	9,5
03089-9010	steel	10	17	11,5
03089-90005	stainless steel	5	8	6
03089-90006	stainless steel	6	10	7
03089-90008	stainless steel	8	13,5	9,5
03089-90010	stainless steel	10	17	11,5

Notes

Indexing plungers - Premium

with tapered pin

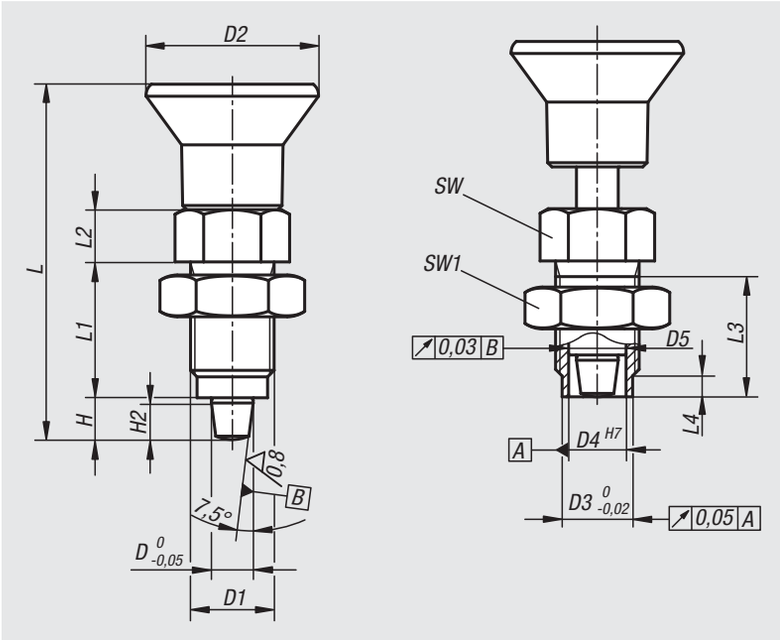

Material:
Steel version:
indexing pin hardened:
grade 5.8

Stainless steel version:
indexing pin hardened
threaded sleeve 1.4305
indexing pin 1.4034

Mushroom knob black grey thermoplastic.

Version:
Steel version:
indexing pin hardened, ground and black oxidised.

Stainless steel version:
indexing pin hardened, ground and bright.

Sample order:
nlm 03089-52206

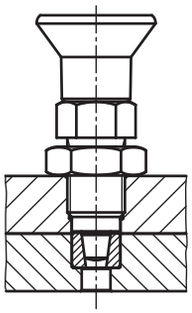

Note:
Premium indexing plungers are characterized by more stringent manufacturing requirements for the indexing plungers and the threaded sleeve. In addition, a centring locator that can be used to increase the positioning accuracy is provided on the threaded sleeve. These indexing plungers are used when it is necessary to prevent shifting of the locked position by transverse forces and greater positioning accuracy is required. A new locking position can only be set after the pin has been manually disengaged. When high lateral forces are to be expected, the centring locator should be used.

Assembly:
When using the threaded sleeve centring, it is recommended the receiving reamed hole be machined before tapping.
The conical contact surface is aligned by the threaded sleeve and locking nut.

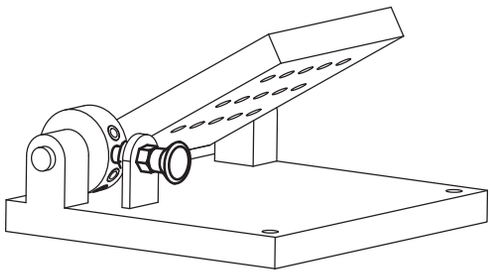

On request:
Special versions and spacer rings.

Accessories:
Matching tapered bush 03089.

Order No.	Main material	D	D1	D2	D3	D4	D5	L	L1	L2	L3	L4	H	H2	SW	SW1	Spring force initial pressure F1 approx. N	Spring force final pressure F2 approx. N
03089-52105	steel	5	M10x1	21	8	6	6 -0,01/-0,02	43,5	17	7	15	3	5	4	13	13	5	12
03089-52206	steel	6	M12x1,5	25	10	8,5	8,5 -0,01/-0,03	51,7	20	8	17	3	6	5	14	14	6	14
03089-52308	steel	8	M16x1,5	33	13,5	11	11 -0,01/-0,03	68	26	10	23	4	8	7	19	19	15	35
03089-52410	steel	10	M20x1,5	33	17	11	11 -0,01/-0,03	74	28	12	25	4	10	9	22	22	15	34

Order No.	Main material	D	D1	D2	D3	D4	D5	L	L1	L2	L3	L4	H	H2	SW	SW1	Spring force initial pressure F1 approx. N	Spring force final pressure F2 approx. N
03089-502105	stainless steel	5	M10x1	21	8	6	6 -0,01/-0,02	43,5	17	7	15	3	5	4	13	13	5	12
03089-502206	stainless steel	6	M12x1,5	25	10	8,5	8,5 -0,01/-0,03	51,7	20	8	17	3	6	5	14	14	6	14
03089-502308	stainless steel	8	M16x1,5	33	13,5	11	11 -0,01/-0,03	68	26	10	23	4	8	7	19	19	15	35
03089-502410	stainless steel	10	M20x1,5	33	17	11	11 -0,01/-0,03	74	28	12	25	4	10	9	22	22	15	34

Bushes tapered

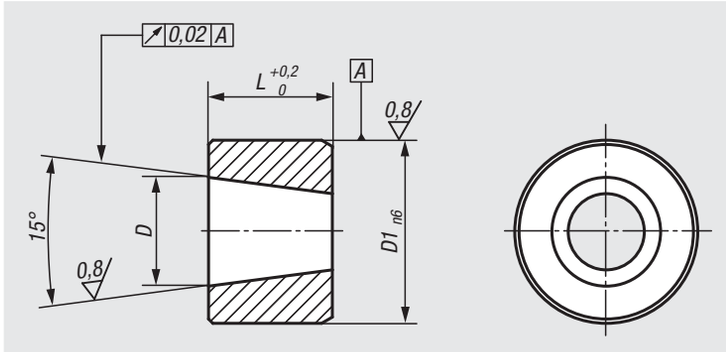

Material:
Steel or stainless steel 1.4034.

Version:
Steel version:
black oxidised, hardened and ground.
Stainless steel version:
bright, hardened and ground.

Sample order:
nlm 03089-9106

Note:
Matching bush for premium indexing plungers with tapered pin 03089.

Assembly:
To increase the coaxial alignment accuracy, the holes for the bush and the premium indexing plunger can be machined simultaniously.

Order No.	Main material	D	D1	L
03089-9105	steel	5	8	6
03089-9106	steel	6	10	7
03089-9108	steel	8	13,5	9,5
03089-9110	steel	10	17	11,5
03089-91005	stainless steel	5	8	6
03089-91006	stainless steel	6	10	7
03089-91008	stainless steel	8	13,5	9,5
03089-91010	stainless steel	10	17	11,5

Notes

Spacer rings

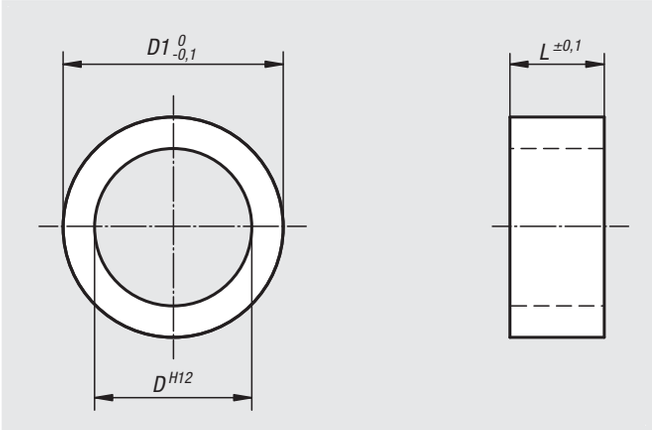

Material:
Stainless steel

Version:
Bright.

Sample order:
nlm 03089-90811021

Note:
Spacer rings are used to adjust the indexing plunger thread length to suit the application wall thickness.

Drawing reference:
1) Indexing plunger
2) Spacer ring

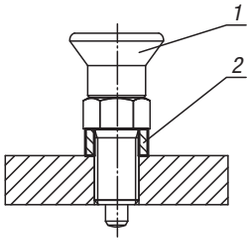

Order No.	D	D1	L
03089-90811021	8	11	2
03089-90811031	8	11	3
03089-90811041	8	11	4
03089-90811061	8	11	6
03089-90811081	8	11	8
03089-91014021	10	14	2
03089-91014031	10	14	3
03089-91014041	10	14	4
03089-91014061	10	14	6
03089-91014081	10	14	8
03089-91215021	12	15	2
03089-91215041	12	15	4
03089-91215051	12	15	5
03089-91215061	12	15	6
03089-91215081	12	15	8
03089-91217021	12	17	2
03089-91217041	12	17	4
03089-91217051	12	17	5
03089-91217061	12	17	6
03089-91217081	12	17	8
03089-91621041	16	21	4
03089-91621051	16	21	5
03089-91621061	16	21	6
03089-91621081	16	21	8
03089-91621101	16	21	10

Indexing plungers ECO

Material:
Steel version:
Indexing pin not hardened.
Threaded sleeve 1.0718.
Indexing pin 1.4305.

Stainless steel version:
Indexing pin not hardened.
Threaded sleeve 1.4305.
Indexing pin 1.4305.

Mushroom knob black grey thermoplastic.

Version:
Steel version:
Indexing pin hardened.
Threaded sleeve blue passivated.
Indexing pin bright.

Stainless steel version:
Indexing pin not hardened.
Steel parts bright.

Sample order:
nlm 03089-01903060

Note:
This article is a cost-efficient alternative to the existing indexing plungers. It is suitable for applications which require less precision.
The max. tightening torque should be observed when assembling.

On request:
Special versions and fine thread

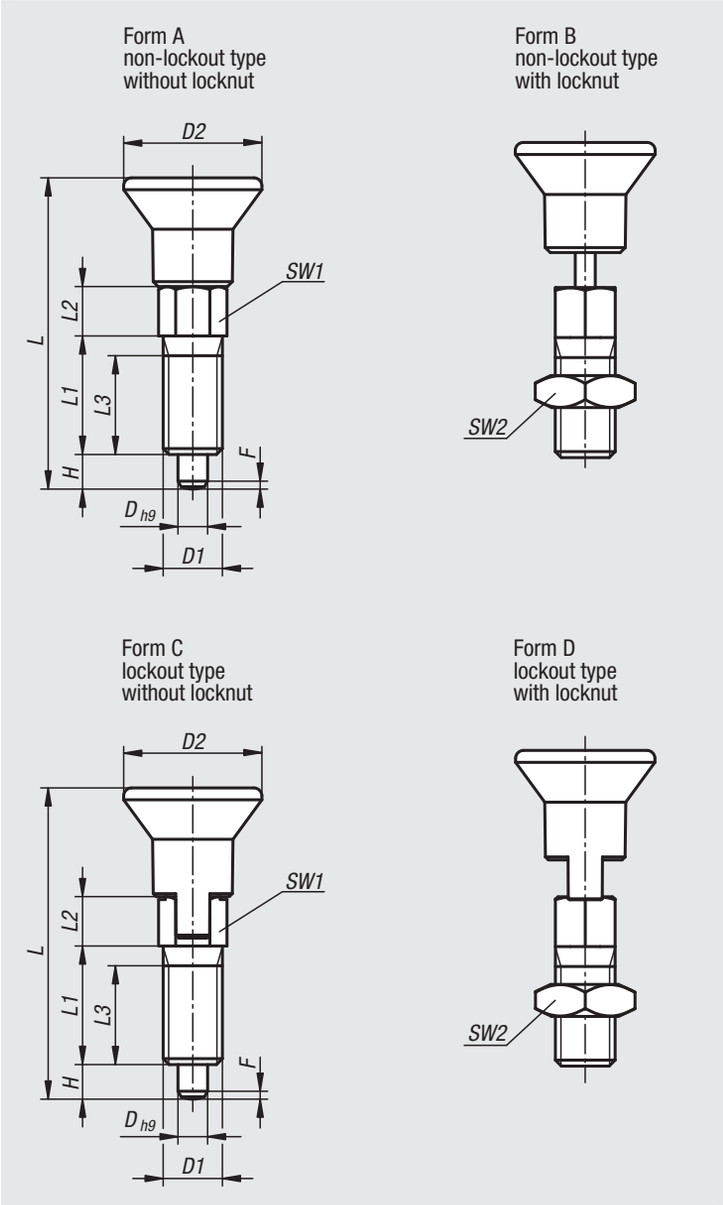

Indexing plunger ECO, steel, indexing pin not hardened

Order No. Form A	Order No. Form B	Order No. Form C	Order No. Form D	D	D1	D2	L	L1	L2	L3	H	SW1	SW2	Fx30°	Spring force initial pressure F1 approx. N	Spring force final pressure F2 approx. N	Tightening torque max. Nm
03089-01903060	03089-02903060	03089-03903060	03089-04903060	3	M6	14	31,5	12	5	10	3,5	6	-/10/-/10	0,8	4	10	2
03089-01004060	03089-02004060	03089-03004060	03089-04004060	4	M6	14	36	15	6	13	4	6	-/10/-/10	1	6	12	2
03089-01105080	03089-02105080	03089-03105080	03089-04105080	5	M8	14	40	17	7	15	5	8	-/13/-/13	1,3	6	12	7
03089-01206100	03089-02206100	03089-03206100	03089-04206100	6	M10	18	47,5	20	8	17	6	10	-/17/-/17	1,8	8	15	15
03089-01308120	03089-02308120	03089-03308120	03089-04308120	8	M12	25	61,7	26	10	23	8	12	-/19/-/19	2,3	8	19	20

Indexing plunger ECO, stainless steel, indexing pin not hardened

Order No. Form A	Order No. Form B	Order No. Form C	Order No. Form D	D	D1	D2	L	L1	L2	L3	H	SW1	SW2	Fx30°	Spring force initial pressure F1 approx. N	Spring force final pressure F2 approx. N	Tightening torque max. Nm
03089-11903060	03089-12903060	03089-13903060	03089-14903060	3	M6	14	31,5	12	5	10	3,5	6	-/10/-/10	0,8	4	10	2
03089-11004060	03089-12004060	03089-13004060	03089-14004060	4	M6	14	36	15	6	13	4	6	-/10/-/10	1	6	12	2
03089-11105080	03089-12105080	03089-13105080	03089-14105080	5	M8	14	40	17	7	15	5	8	-/13/-/13	1,3	6	12	7
03089-11206100	03089-12206100	03089-13206100	03089-14206100	6	M10	18	47,5	20	8	17	6	10	-/17/-/17	1,8	8	15	15
03089-11308120	03089-12308120	03089-13308120	03089-14308120	8	M12	25	61,7	26	10	23	8	12	-/19/-/19	2,3	8	19	20

Indexing plunger

with lock

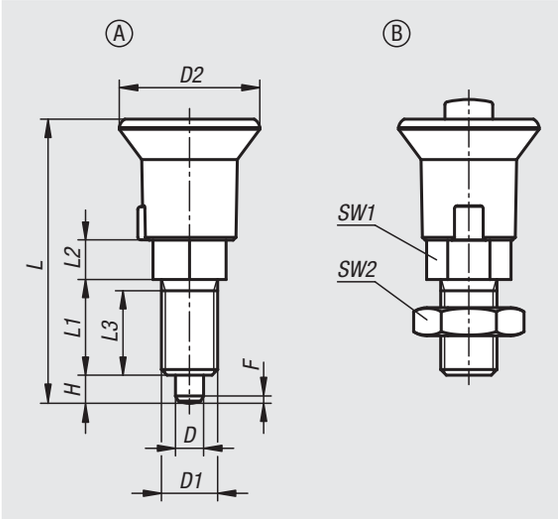

Material:
Steel version:
threaded sleeve and indexing pin, free-cutting steel.

Stainless steel version:
indexing pin not hardened.
Threaded sleeve 1.4305.
Indexing pin 1.4305.

Mushroom grip, black grey thermoplastic.
Release button, red thermoplastic.

Version:
Steel version:
threaded sleeve, black oxidised.
Indexing pin hardened, ground and black oxidised.

Stainless steel version:
threaded sleeve, bright.
Indexing pin not hardened, ground and bright.

Sample order:
nlm 03089-11051

Note:
Indexing plungers are used where any change in locking position due to lateral forces should be prevented.
The locking mechanism is activated by pressing the push button.
The red release button enables the indexed position to be changed.

Drawing reference:
Form A: without locknut
Form B: with locknut

Order No. Form A	Order No. Form B	Main material	Version	D	D1	D2	L	L1	L2	L3	H	SW1	SW2	Fx30°	return force N
03089-11051	**03089-21051**	steel	hardened	5	M10x1	25	50,5	17	7	15	5	13	-/17	1,3	8-12
03089-12061	**03089-22061**	steel	hardened	6	M12x1,5	25	55,5	20	8	17	6	14	-/19	1,8	4-12
03089-13081	**03089-23081**	steel	hardened	8	M16x1,5	33	76	26	10	23	8	19	-/24	2,3	10-20
03089-14101	**03089-24101**	steel	hardened	10	M20x1,5	33	82	28	12	25	10	22	-/30	2,8	3-23
03089-111051	**03089-121051**	stainless steel	not hardened	5	M10x1	25	50,5	17	7	15	5	13	-/17	1,3	8-12
03089-112061	**03089-122061**	stainless steel	not hardened	6	M12x1,5	25	55,5	20	8	17	6	14	-/19	1,8	4-12
03089-113081	**03089-123081**	stainless steel	not hardened	8	M16x1,5	33	76	26	10	23	8	19	-/24	2,3	10-20
03089-114101	**03089-124101**	stainless steel	not hardened	10	M20x1,5	33	82	28	12	25	10	22	-/30	2,8	3-23

Notes

Indexing plungers

Material:
Steel version:
Indexing pin hardened:
grade 5.8.

Stainless steel version,
Indexing pin hardened
Threaded sleeve 1.4305
Indexing pin 1.4034

Indexing pin not hardened
Threaded sleeve 1.4305
Indexing pin 1.4305

Mushroom knob black grey thermoplastic

Version:
Steel version:
Indexing pin hardened, ground, black oxidised.

Stainless steel version:
Indexing pin hardened, ground and bright.
Indexing pin not hardened, ground and bright.

Sample order:
nlm 03090-04206

Note:
Indexing plungers are used to prevent any change in locking position due to lateral forces. A new locking position can only be set after the pin has been manually disengaged. Form C or D is recommended for applications in which the pin is disengaged over extended periods and should be prevented from springing back.

On request:
Special versions.

Accessories:
Spacer rings 03089

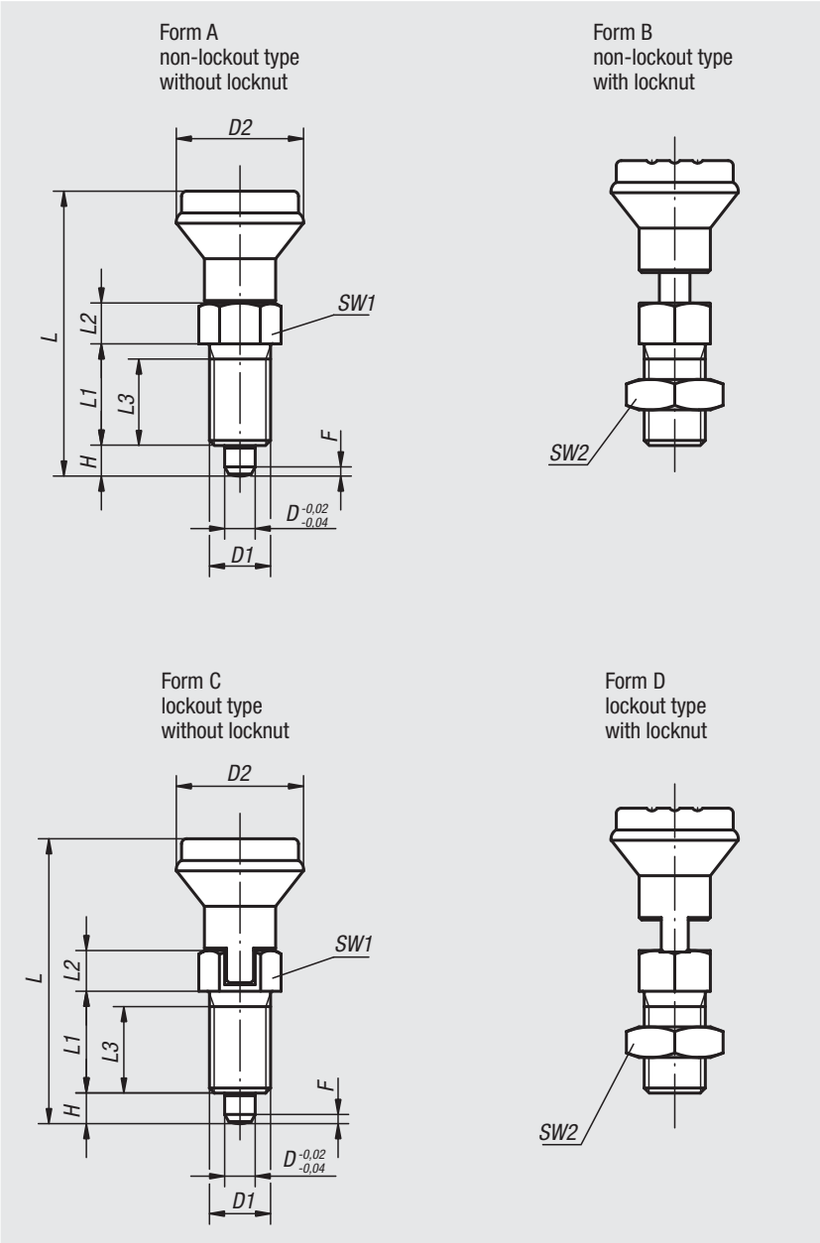

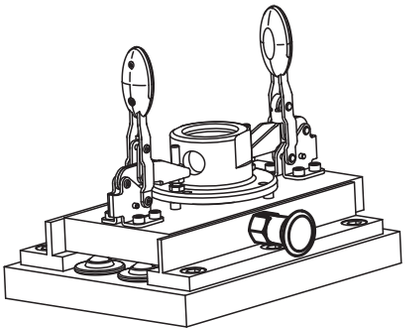

Indexing plungers

Indexing plungers, steel, indexing pin hardened

Order No. Form A	Order No. Form B	Order No. Form C	Order No. Form D	D	D1	D2	L	L1	L2	L3	H	SW1	SW2	Fx30°	Spring force initial pressure F1 approx. N	Spring force final pressure F2 approx. N
03090-1105	03090-2105	03090-3105	03090-4105	5	M10x1	21	47	17	7	15	5	13	-/17/-/17	1,3	5	12
03090-1206	03090-2206	03090-3206	03090-4206	6	M12x1,5	25	56	20	8	17	6	14	-/19/-/19	1,8	6	14
03090-1308	03090-2308	03090-3308	03090-4308	8	M16x1,5	33	74	26	10	23	8	19	-/24/-/24	2,3	15	35
03090-1410	03090-2410	03090-3410	03090-4410	10	M20x1,5	33	80	28	12	25	10	22	-/30/-/30	2,8	15	34

Indexing plungers, stainless steel, indexing pin hardened

Order No. Form A	Order No. Form B	Order No. Form C	Order No. Form D	D	D1	D2	L	L1	L2	L3	H	SW1	SW2	Fx30°	Spring force initial pressure F1 approx. N	Spring force final pressure F2 approx. N
03090-01105	03090-02105	03090-03105	03090-04105	5	M10x1	21	47	17	7	15	5	13	-/17/-/17	1,3	5	12
03090-01206	03090-02206	03090-03206	03090-04206	6	M12x1,5	25	56	20	8	17	6	14	-/19/-/19	1,8	6	14
03090-01308	03090-02308	03090-03308	03090-04308	8	M16x1,5	33	74	26	10	23	8	19	-/24/-/24	2,3	15	35
03090-01410	03090-02410	03090-03410	03090-04410	10	M20x1,5	33	80	28	12	25	10	22	-/30/-/30	2,8	15	34

Indexing plungers, stainless steel, indexing pin not hardened

Order No. Form A	Order No. Form B	Order No. Form C	Order No. Form D	D	D1	D2	L	L1	L2	L3	H	SW1	SW2	Fx30°	Spring force initial pressure F1 approx. N	Spring force final pressure F2 approx. N
03090-11105	03090-12105	03090-13105	03090-14105	5	M10x1	21	47	17	7	15	5	13	-/17/-/17	1,3	5	12
03090-11206	03090-12206	03090-13206	03090-14206	6	M12x1,5	25	56	20	8	17	6	14	-/19/-/19	1,8	6	14
03090-11308	03090-12308	03090-13308	03090-14308	8	M16x1,5	33	74	26	10	23	8	19	-/24/-/24	2,3	15	35
03090-11410	03090-12410	03090-13410	03090-14410	10	M20x1,5	33	80	28	12	25	10	22	-/30/-/30	2,8	15	34

Indexing plungers

with locked mark

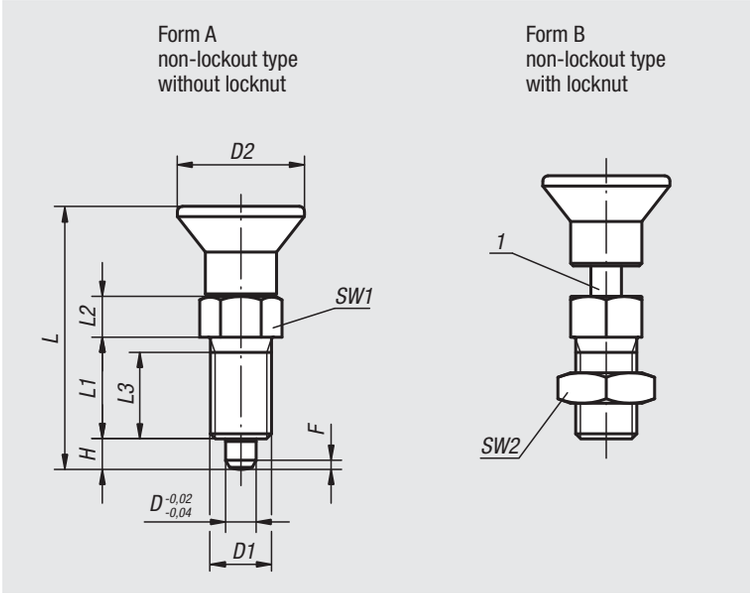

Material:
Indexing pin steel.
Threaded sleeve 1.0718.
Mushroom knob black grey thermoplastic.
Lock mark aluminium.

Version:
Indexing pin steel, hardened, ground and black oxidised.
Threaded sleeve black oxidised.
Lock mark red anodised.

Sample order:
nlm 03090-71105

Note:
Indexing plungers are used to prevent any change in locking position due to lateral forces. A new locking position can only be set after the plunger has been manually disengaged.
When the lock mark is visible the plunger is either completely disengaged or only partly in the index position.

On request:
Special versions.

Accessories:
Spacer rings 03089

Drawing reference:
1) marking ring

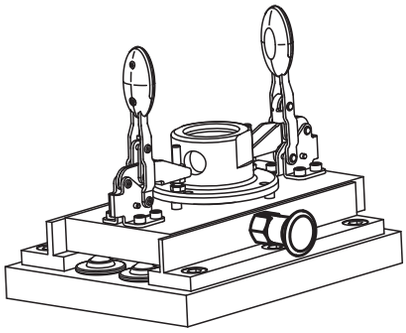

Order No. Form A	Order No. Form B	D	D1	D2	L	L1	L2	L3	H	SW1	SW2	Fx30°	Spring force initial pressure F1 approx. N	Spring force final pressure F2 approx. N
03090-71105	**03090-72105**	5	M10x1	21	43,5	17	7	15	5	13	-/17	1,3	5	12
03090-71206	**03090-72206**	6	M12x1,5	25	51,7	20	8	17	6	14	-/19	1,8	6	14
03090-71308	**03090-72308**	8	M16x1,5	33	68	26	10	23	8	19	-/24	2,3	15	35

Notes

Indexing plungers

with T-grip

Material:
Steel version:
Indexing pin hardened:
pin 1.0718
threaded sleeve 1.0718.

Stainless steel version:
Indexing pin hardened:
pin 1.4034
threaded sleeve 1.4305.

T-grip thermoplastic, black grey or traffic red RAL 3020.

Version:
Steel version:
indexing pin hardened, ground and black oxidised.
Threaded sleeve black oxidised

Stainless steel version:
indexing pin hardened, ground and bright.
Threaded sleeve bright.

Sample order:
nlm 03090-5308

Note:
Indexing plungers are used to prevent any change in locking position due to lateral forces. A new locking position can only be set after the pin has been manually disengaged. The ergonomic T-grip enables easy handling and low effort.

On request:
Special versions.

Accessories:
Spacer rings 03089

Drawing reference:
Form A: without locknut
Form B: with locknut

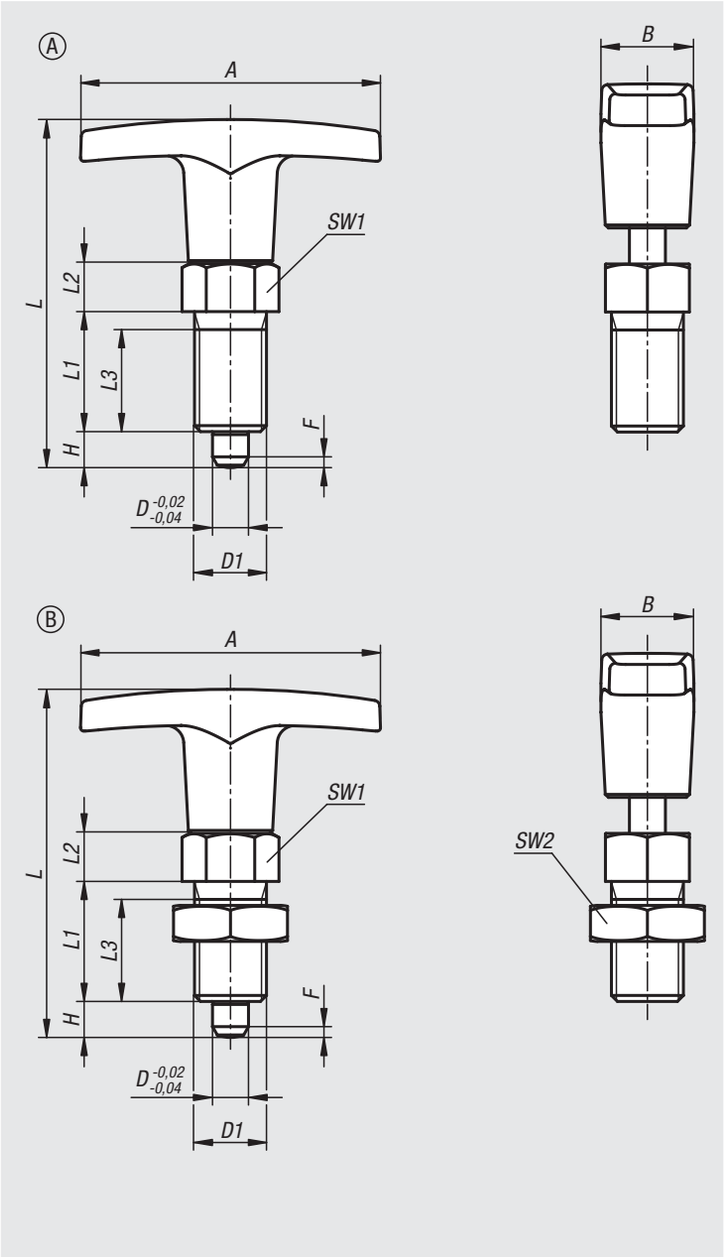

Indexing plungers

with T-grip

Indexing plungers, steel, indexing pin hardened

Order No. Form A	Order No. Form B	Component colour	A	B	D	D1	L	L1	L2	L3	H	SW1	SW2	Fx30°	Spring force initial pressure F1 approx. N	Spring force final pressure F2 approx. N
03090-5206	**03090-6206**	black grey RAL 7021	50	15,5	6	M12x1,5	58	20	8	17	6	14	-/19	1,8	6	14
03090-5308	**03090-6308**	black grey RAL 7021	60	18	8	M16x1,5	77	26	10	23	8	19	-/24	2,3	15	35
03090-5410	**03090-6410**	black grey RAL 7021	72	19	10	M20x1,5	84	28	12	25	10	22	-/30	2,8	15	34
03090-520684	**03090-620684**	traffic red RAL 3020	50	15,5	6	M12x1,5	58	20	8	17	6	14	-/19	1,8	6	14
03090-530884	**03090-630884**	traffic red RAL 3020	60	18	8	M16x1,5	77	26	10	23	8	19	-/24	2,3	15	35
03090-541084	**03090-641084**	traffic red RAL 3020	72	19	10	M20x1,5	84	28	12	25	10	22	-/30	2,8	15	34

Indexing plungers, stainless steel, indexing pin hardened

Order No. Form A	Order No. Form B	Component colour	A	B	D	D1	L	L1	L2	L3	H	SW1	SW2	Fx30°	Spring force initial pressure F1 approx. N	Spring force final pressure F2 approx. N
03090-05206	**03090-06206**	black grey RAL 7021	50	15,5	6	M12x1,5	58	20	8	17	6	14	-/19	1,8	6	14
03090-05308	**03090-06308**	black grey RAL 7021	60	18	8	M16x1,5	77	26	10	23	8	19	-/24	2,3	15	35
03090-05410	**03090-06410**	black grey RAL 7021	72	19	10	M20x1,5	84	28	12	25	10	22	-/30	2,8	15	34
03090-0520684	**03090-0620684**	traffic red RAL 3020	50	15,5	6	M12x1,5	58	20	8	17	6	14	-/19	1,8	6	14
03090-0530884	**03090-0630884**	traffic red RAL 3020	60	18	8	M16x1,5	77	26	10	23	8	19	-/24	2,3	15	35
03090-0541084	**03090-0641084**	traffic red RAL 3020	72	19	10	M20x1,5	84	28	12	25	10	22	-/30	2,8	15	34

Indexing plungers ECO short version

Material:
Steel version:
Indexing pin not hardened.
Threaded sleeve 1.0718.
Indexing pin 1.4305.

Stainless steel version:
Indexing pin not hardened.
Threaded sleeve 1.4305.
Indexing pin 1.4305.

Mushroom knob black grey thermoplastic.

Version:
Steel version:
Indexing pin hardened.
Threaded sleeve blue passivated.
Indexing pin bright.

Stainless steel version:
Indexing pin not hardened.
Steel parts bright.

Sample order:
nlm 03090-01903060

Note:
This article is a cost-efficient alternative to the existing indexing plungers. It is suitable for applications which require less precision.
The max. tightening torque should be observed when assembling.

On request:
Special versions.

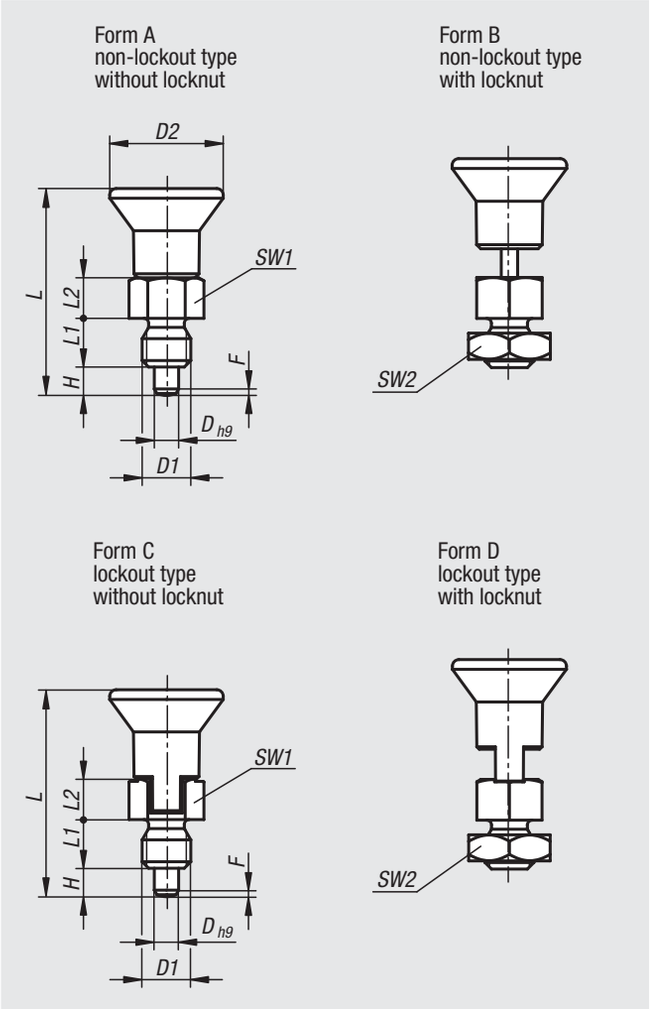

Indexing plungers ECO, short version, steel, indexing pin not hardened

Order No. Form A	Order No. Form B	Order No. Form C	Order No. Form D	D	D1	D2	L	L1	L2	H	SW1	SW2	Fx30°	Spring force initial pressure F1 approx. N	Spring force final pressure F2 approx. N	Tightening torque max. Nm
03090-01903060	03090-02903060	03090-03903060	03090-04903060	3	M6	14	25,5	6	5	3,5	8	-/10/-/10	0,8	3,5	8	2
03090-01004080	03090-02004080	03090-03004080	03090-04004080	4	M8	18	29,5	6	6	4	10	-/13/-/13	1	3,5	9	2
03090-01105100	03090-02105100	03090-03105100	03090-04105100	5	M10	21	34,5	8	7	5	13	-/17/-/17	1,3	6	12	7
03090-01206120	03090-02206120	03090-03206120	03090-04206120	6	M12	25	41,7	10	8	6	14	-/19/-/19	1,8	6	12	15
03090-01308160	03090-02308160	03090-03308160	03090-04308160	8	M16	33	54	12	10	8	19	-/24/-/24	2,3	6	13	20

Indexing plungers ECO, short version, stainless steel, indexing pin not hardened

Order No. Form A	Order No. Form B	Order No. Form C	Order No. Form D	D	D1	D2	L	L1	L2	H	SW1	SW2	Fx30°	Spring force initial pressure F1 approx. N	Spring force final pressure F2 approx. N	Tightening torque max. Nm
03090-11903060	03090-12903060	03090-13903060	03090-14903060	3	M6	14	25,5	6	5	3,5	8	-/10/-/10	0,8	3,5	8	2
03090-11004080	03090-12004080	03090-13004080	03090-14004080	4	M8	18	29,5	6	6	4	10	-/13/-/13	1	3,5	9	2
03090-11105100	03090-12105100	03090-13105100	03090-14105100	5	M10	21	34,5	8	7	5	13	-/17/-/17	1,3	6	12	7
03090-11206120	03090-12206120	03090-13206120	03090-14206120	6	M12	25	41,7	10	8	6	14	-/19/-/19	1,8	6	12	15
03090-11308160	03090-12308160	03090-13308160	03090-14308160	8	M16	33	54	12	10	8	19	-/24/-/24	2,3	6	13	20

Indexing plungers

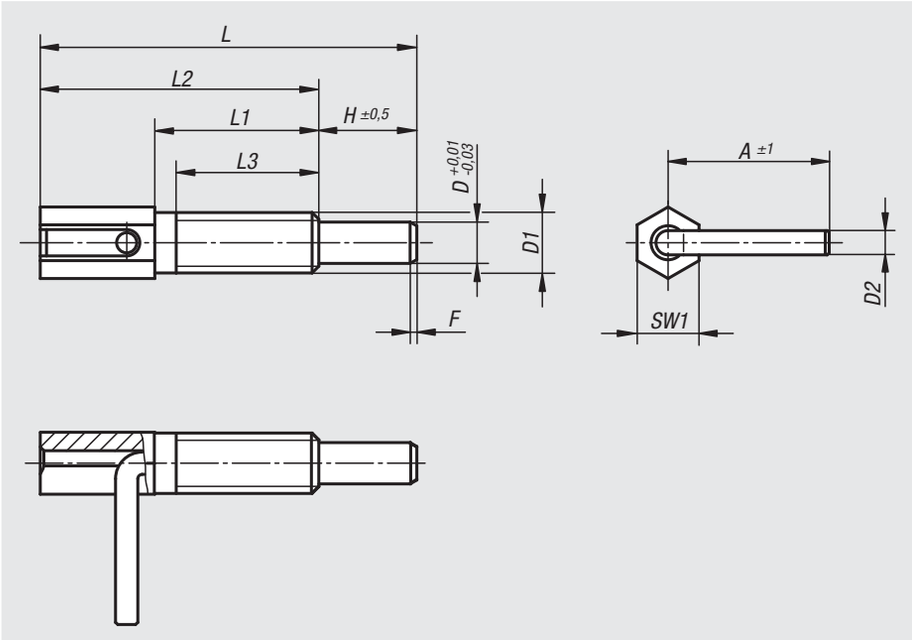

Material:
Steel grade 5.8.

Version:
Blue passivated.

Sample order:
nlm 03091-1206

Note:
Indexing plungers are used to prevent any change in locking position due to lateral forces. A new locking position can only be set after the pin has been manually disengaged.

On request:
Special versions.

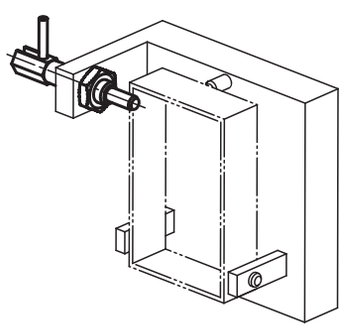

Order No.	D	D1	D2	L	L1	L2	L3	H	A	SW1	Fx30°	Spring force initial pressure F1 approx. N	Spring force final pressure F2 approx. N	Tightening torque max. Nm
03091-1104	4	M6	2,3	41,5	20	32	17	9,5	16	6	0,7	3	10	1,6
03091-1905	5	M8	3	54	27	42	24	12	19	8	0,9	3,5	13,5	4,5
03091-1206	6	M10	3,5	65	33,5	51	30	14	23,5	10	1,1	4	16	10
03091-1308	8	M12	4,7	73	31,8	54	28	19	31	12	1,3	4	22	13
03091-1410	10	M16	4,7	102,5	50,5	77,5	44,5	25	33	16	1,6	4	23	42

Indexing plungers

Material:
Steel version:
Indexing pin hardened:
grade 5.8.

Stainless steel version:
Indexing pin hardened:
Threaded sleeve 1.4305.
Indexing pin 1.4034.

Indexing pin not hardened:
Threaded sleeve 1.4305.
Indexing pin 1.4305.

Version:
Steel version:
Indexing pin hardened, ground, black oxidised.

Stainless steel version:
Indexing pin hardened, ground and bright.
Indexing pin not hardened, ground and bright.

Sample order:
nlm 03092-02308

Note:
Indexing plungers are used to prevent any change in locking position due to lateral forces. A new locking position can only be set after the pin has been disengaged. Special grips can be fitted on the projecting threaded pin. This pin is also suitable for automatic actuation e.g. programme controlled pneumatic cylinder or by remote control using bowden cables.

On request:
Special versions.

Accessories:
Spacer rings 03089

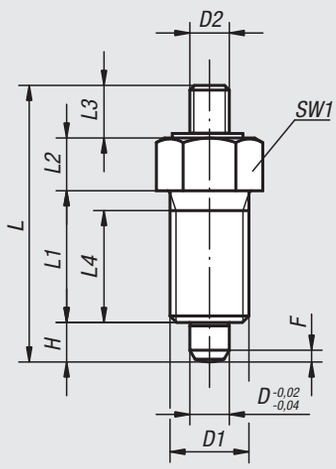

Form E
with threaded pin
without locknut

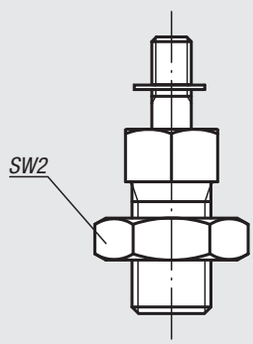

Form F
with threaded pin
with locknut

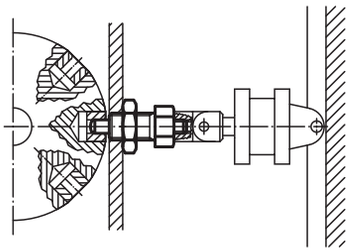

Indexing plungers

Indexing plungers, steel, indexing pin hardened

Order No. Form E	Order No. Form F	D	D1	D2	L	L1	L2	L3	L4	H	SW1	SW2	Fx30°	Spring force initial pressure F1 approx. N	Spring force final pressure F2 approx. N
03092-1903	**03092-2903**	3	M6x0,75	M2	24	12	5	3,5	10	3,5	8	- / 10	0,8	4,5	10
03092-1004	**03092-2004**	4	M8x1	M3	32	15	6	7	13	4	10	- / 13	1	6	12
03092-1105	**03092-2105**	5	M10x1	M4	37	17	7	8	15	5	13	- / 17	1,3	5	12
03092-1206	**03092-2206**	6	M12x1,5	M6	42	20	8	8	17	6	14	- / 19	1,8	6	14
03092-1308	**03092-2308**	8	M16X1,5	M8	56	26	10	12	23	8	19	- / 24	2,3	15	35
03092-1410	**03092-2410**	10	M20x1,5	M8	62	28	12	12	25	10	22	- / 30	2,8	15	34
03092-1412	**03092-2412**	12	M20x1,5	M8	66	28	14	12	25	12	22	- / 30	2,8	15	39
03092-1516	**03092-2516**	16	M24x2	M10	80	32	18	14	28	16	27	- / 36	3,2	20	46

Indexing plungers, stainless steel, indexing pin hardened

Order No. Form E	Order No. Form F	D	D1	D2	L	L1	L2	L3	L4	H	SW1	SW2	Fx30°	Spring force initial pressure F1 approx. N	Spring force final pressure F2 approx. N
03092-01903	**03092-02903**	3	M6x0,75	M2	24	12	5	3,5	10	3,5	8	- / 10	0,8	4,5	10
03092-01004	**03092-02004**	4	M8x1	M3	32	15	6	7	13	4	10	- / 13	1	6	12
03092-01105	**03092-02105**	5	M10x1	M4	37	17	7	8	15	5	13	- / 17	1,3	5	12
03092-01206	**03092-02206**	6	M12x1,5	M6	42	20	8	8	17	6	14	- / 19	1,8	6	14
03092-01308	**03092-02308**	8	M16X1,5	M8	56	26	10	12	23	8	19	- / 24	2,3	15	35
03092-01410	**03092-02410**	10	M20x1,5	M8	62	28	12	12	25	10	22	- / 30	2,8	15	34
03092-01412	**03092-02412**	12	M20x1,5	M8	66	28	14	12	25	12	22	- / 30	2,8	15	39
03092-01516	**03092-02516**	16	M24x2	M10	80	32	18	14	28	16	27	- / 36	3,2	20	46

Indexing plungers, stainless steel, indexing pin not hardened

Order No. Form E	Order No. Form F	D	D1	D2	L	L1	L2	L3	L4	H	SW1	SW2	Fx30°	Spring force initial pressure F1 approx. N	Spring force final pressure F2 approx. N
03092-11903	**03092-12903**	3	M6x0,75	M2	24	12	5	3,5	10	3,5	8	- / 10	0,8	4,5	10
03092-11004	**03092-12004**	4	M8x1	M3	32	15	6	7	13	4	10	- / 13	1	6	12
03092-11105	**03092-12105**	5	M10x1	M4	37	17	7	8	15	5	13	- / 17	1,3	5	12
03092-11206	**03092-12206**	6	M12x1,5	M6	42	20	8	8	17	6	14	- / 19	1,8	6	14
03092-11308	**03092-12308**	8	M16X1,5	M8	56	26	10	12	23	8	19	- / 24	2,3	15	35
03092-11410	**03092-12410**	10	M20x1,5	M8	62	28	12	12	25	10	22	- / 30	2,8	15	34
03092-11412	**03092-12412**	12	M20x1,5	M8	66	28	14	12	25	12	22	- / 30	2,8	15	39
03092-11516	**03092-12516**	16	M24x2	M10	80	32	18	14	28	16	27	- / 36	3,2	20	46

Indexing plungers

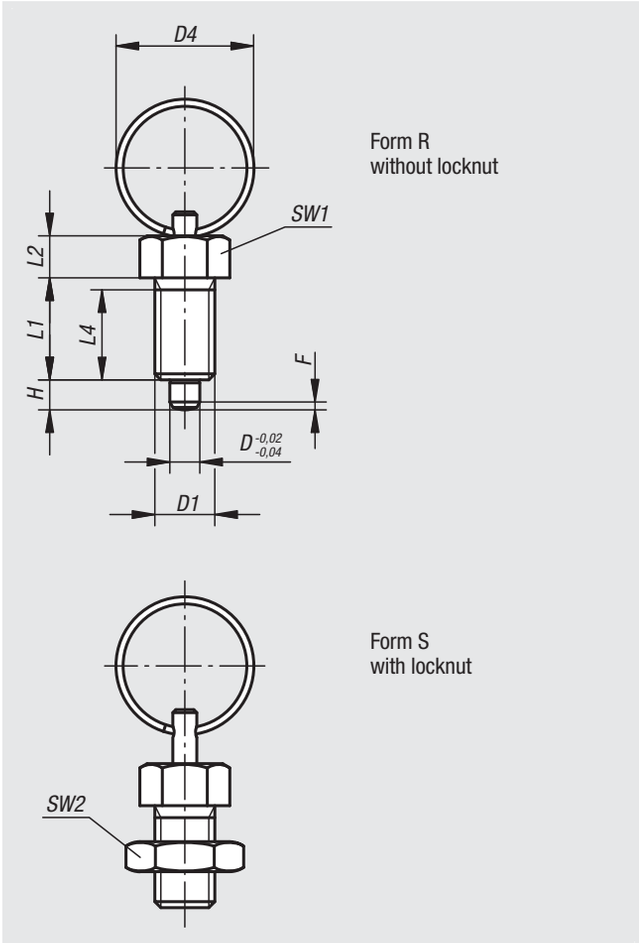

Form R
without locknut

Form S
with locknut

Material:
Steel version:
Indexing pin hardened:
grade 5.8.

Stainless steel version:
Indexing pin hardened:
Threaded sleeve 1.4305
Indexing pin 1.4034

Indexing pin not hardened
Threaded sleeve 1.4305
Indexing pin 1.4305

Key ring 1.4310, bright.

Version:
Steel version:
Indexing pin hardened, ground, black oxidised.

Stainless steel version:
Indexing pin hardened, ground and bright.
Indexing pin not hardened, ground and bright.

Sample order:
nlm 03092-03308

Note:
Indexing plungers are used to prevent any change in locking position due to lateral forces. A new locking position can only be set after the pin has been disengaged. The key ring is also suitable for automatic actuation of the indexing plunger by e.g. programme-controlled pneumatic cylinder or by remote control using bowden cables.

On request:
Special versions.

Accessories:
Spacer rings 03089

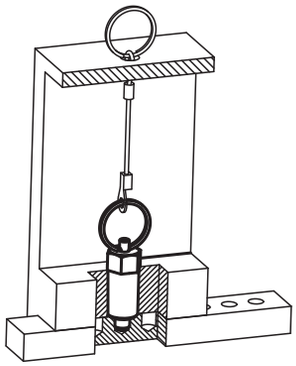

Indexing plungers

Indexing plungers, steel, indexing pin hardened

Order No. Form R	Order No. Form S	D	D1	D4	L1	L2	L4	H	SW1	SW2	Fx30°	Spring force initial pressure F1 approx. N	Spring force final pressure F2 approx. N
03092-3004	**03092-4004**	4	M8x1	15	15	6	13	4	10	- / 13	1	6	12
03092-3105	**03092-4105**	5	M10x1	23	17	7	15	5	13	- / 17	1,3	5	12
03092-3206	**03092-4206**	6	M12x1,5	23	20	8	17	6	14	- / 19	1,8	6	14
03092-3308	**03092-4308**	8	M16X1,5	28	26	10	23	8	19	- / 24	2,3	15	35
03092-3410	**03092-4410**	10	M20x1,5	28	28	12	25	10	22	- / 30	2,8	15	34

Indexing plungers, stainless steel, indexing pin hardened

Order No. Form R	Order No. Form S	D	D1	D4	L1	L2	L4	H	SW1	SW2	Fx30°	Spring force initial pressure F1 approx. N	Spring force final pressure F2 approx. N
03092-03004	**03092-04004**	4	M8x1	15	15	6	13	4	10	- / 13	1	6	12
03092-03105	**03092-04105**	5	M10x1	23	17	7	15	5	13	- / 17	1,3	5	12
03092-03206	**03092-04206**	6	M12x1,5	23	20	8	17	6	14	- / 19	1,8	6	14
03092-03308	**03092-04308**	8	M16X1,5	28	26	10	23	8	19	- / 24	2,3	15	35
03092-03410	**03092-04410**	10	M20x1,5	28	28	12	25	10	22	- / 30	2,8	15	34

Indexing plungers, stainless steel, indexing pin not hardened

Order No. Form R	Order No. Form S	D	D1	D4	L1	L2	L4	H	SW1	SW2	Fx30°	Spring force initial pressure F1 approx. N	Spring force final pressure F2 approx. N
03092-13004	**03092-14004**	4	M8x1	15	15	6	13	4	10	- / 13	1	6	12
03092-13105	**03092-14105**	5	M10x1	23	17	7	15	5	13	- / 17	1,3	5	12
03092-13206	**03092-14206**	6	M12x1,5	23	20	8	17	6	14	- / 19	1,8	6	14
03092-13308	**03092-14308**	8	M16X1,5	28	26	10	23	8	19	- / 24	2,3	15	35
03092-13410	**03092-14410**	10	M20x1,5	28	28	12	25	10	22	- / 30	2,8	15	34

Indexing plungers

without collar

Material:
Steel version:
Indexing pin hardened:
grade 5.8.

Stainless steel version,
Indexing pin hardened
Threaded sleeve 1.4305
Indexing pin 1.4034

Indexing pin not hardened
Threaded sleeve 1.4305
Indexing pin 1.4305

Mushroom knob black grey thermoplastic

Version:
Steel version:
Indexing pin hardened, ground, black oxidised.

Stainless steel version:
Indexing pin hardened, ground and bright.
Indexing pin not hardened, ground and bright.

Sample order:
nlm 03093-02206

Note:
Indexing plungers are used to prevent any change in locking position due to lateral forces. A new locking position can only be set after the pin has been manually disengaged.
A washer is available to aid by screwing in the indexing plungers. The washer slides beneath the mushroom knob so that the carrier pins engage in the slot.

On request:
Special versions.

Accessories:
Spacer rings 03089

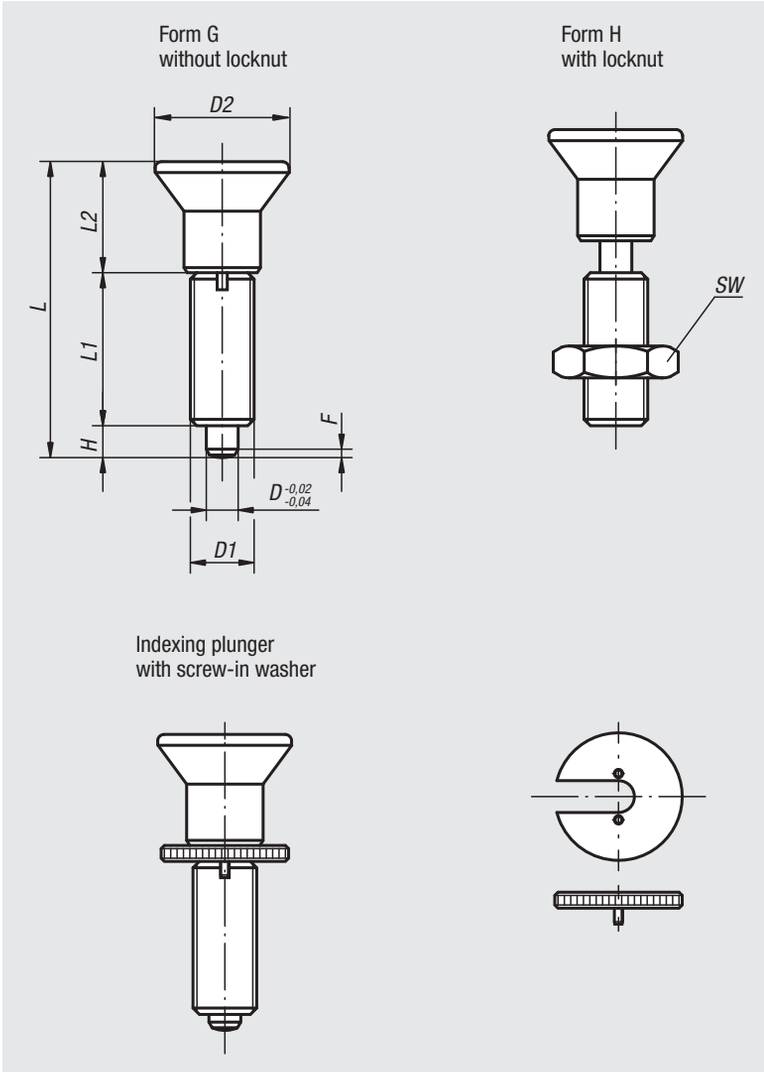

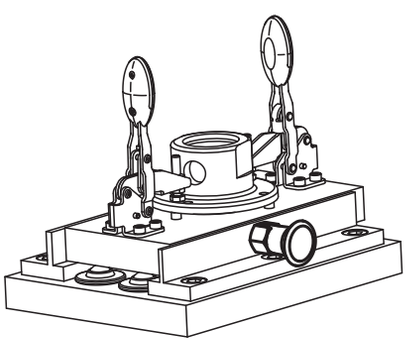

Indexing plungers

without collar

Indexing plungers without collar, steel, indexing pin hardened

Order No. Form G	Order No. Form H	D	D1	D2	L	L1	L2	H	SW	Fx30°	Spring force initial pressure F1 approx. N	Spring force final pressure F2 approx. N	Order No. screw-in washer
03093-1903	**03093-2903**	3	M6x0,75	14	31,5	17	11	3,5	- / 10	0,8	4,5	10	03094-99
03093-1004	**03093-2004**	4	M8x1	18	38,5	21	13,5	4	- / 13	1,3	6	12	03094-90
03093-1105	**03093-2105**	5	M10x1	21	43,5	24	14,5	5	- / 17	1,3	5	12	03094-91
03093-1206	**03093-2206**	6	M12x1,5	25	51,7	28	17,7	6	- / 19	1,8	6	14	03094-92
03093-1308	**03093-2308**	8	M16x1,5	33	68	36	24	8	- / 24	2,3	15	35	03094-93
03093-1410	**03093-2410**	10	M20x1,5	33	74	40	24	10	- / 30	2,8	15	34	03094-94
03093-1412	**03093-2412**	12	M20x1,5	33	78	42	24	12	- / 30	2,8	15	39	03094-94
03093-1516	**03093-2516**	16	M24x2	40	96	50	30	16	- / 36	3,2	20	46	03094-95

Indexing plungers without collar, stainless steel, indexing pin hardened

Order No. Form G	Order No. Form H	D	D1	D2	L	L1	L2	H	SW	Fx30°	Spring force initial pressure F1 approx. N	Spring force final pressure F2 approx. N	Order No. screw-in washer
03093-01903	**03093-02903**	3	M6x0,75	14	31,5	17	11	3,5	- / 10	0,8	4,5	10	03094-99
03093-01004	**03093-02004**	4	M8x1	18	38,5	21	13,5	4	- / 13	1,3	6	12	03094-90
03093-01105	**03093-02105**	5	M10x1	21	43,5	24	14,5	5	- / 17	1,3	5	12	03094-91
03093-01206	**03093-02206**	6	M12x1,5	25	51,7	28	17,7	6	- / 19	1,8	6	14	03094-92
03093-01308	**03093-02308**	8	M16x1,5	33	68	36	24	8	- / 24	2,3	15	35	03094-93
03093-01410	**03093-02410**	10	M20x1,5	33	74	40	24	10	- / 30	2,8	15	34	03094-94
03093-01412	**03093-02412**	12	M20x1,5	33	78	42	24	12	- / 30	2,8	15	39	03094-94
03093-01516	**03093-02516**	16	M24x2	40	96	50	30	16	- / 36	3,2	20	46	03094-95

Indexing plungers without collar, stainless steel, indexing pin not hardened

Order No. Form G	Order No. Form H	D	D1	D2	L	L1	L2	H	SW	Fx30°	Spring force initial pressure F1 approx. N	Spring force final pressure F2 approx. N	Order No. screw-in washer
03093-11903	**03093-12903**	3	M6x0,75	14	31,5	17	11	3,5	- / 10	0,8	4,5	10	03094-99
03093-11004	**03093-12004**	4	M8x1	18	38,5	21	13,5	4	- / 13	1,3	6	12	03094-90
03093-11105	**03093-12105**	5	M10x1	21	43,5	24	14,5	5	- / 17	1,3	5	12	03094-91
03093-11206	**03093-12206**	6	M12x1,5	25	51,7	28	17,7	6	- / 19	1,8	6	14	03094-92
03093-11308	**03093-12308**	8	M16x1,5	33	68	36	24	8	- / 24	2,3	15	35	03094-93
03093-11410	**03093-12410**	10	M20x1,5	33	74	40	24	10	- / 30	2,8	15	34	03094-94
03093-11412	**03093-12412**	12	M20x1,5	33	78	42	24	12	- / 30	2,8	15	39	03094-94
03093-11516	**03093-12516**	16	M24x2	40	96	50	30	16	- / 36	3,2	20	46	03094-95

Indexing plungers

without collar, extended indexing pin

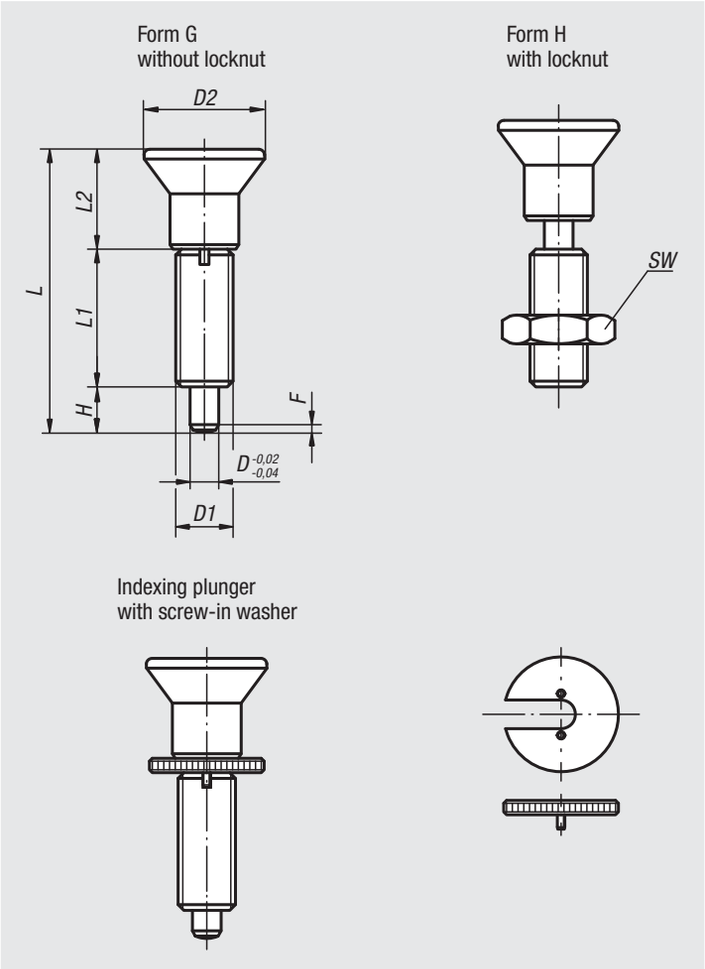

Material:
Steel version:
Indexing pin hardened:
grade 5.8.

Stainless steel version,
Indexing pin hardened
Threaded sleeve 1.4305
Indexing pin 1.4034

Indexing pin not hardened
Threaded sleeve 1.4305
Indexing pin 1.4305

Mushroom knob black grey thermoplastic

Version:
Steel version:
Indexing pin hardened, ground, black oxidised.

Stainless steel version:
Indexing pin hardened, ground and bright.
Indexing pin not hardened, ground and bright.

Sample order:
nlm 03093-21004

Note:
Indexing plungers are used to prevent any change in locking position due to lateral forces. A new locking position can only be set after the pin has been manually disengaged.
A washer is available to aid by screwing in the indexing plungers. The washer slides beneath the mushroom knob so that the carrier pins engage in the slot.

On request:
Special versions.

Accessories:
Spacer rings 03089

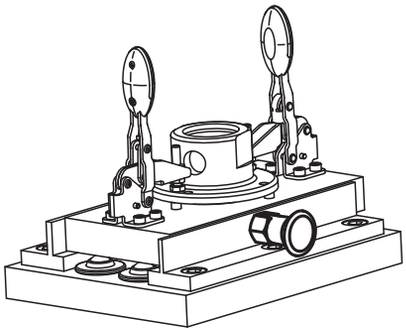

Indexing plungers

without collar, extended indexing pin

Indexing plungers without collar with extended indexing pin, steel, indexing pin hardened

Order No. Form G	Order No. Form H	D	D1	D2	L	L1	L2	H	SW	Fx30°	Spring force initial pressure F1 approx. N	Spring force final pressure F2 approx. N	Order No. screw-in washer
03093-21903	**03093-22903**	3	M6x0,75	14	33	17	11	5	- / 10	0,8	4,5	12	03094-99
03093-21004	**03093-22004**	4	M8x1	18	40,5	21	13,5	6	- / 13	1	6	15	03094-90
03093-21105	**03093-22105**	5	M10x1	21	46,5	24	14,5	8	- / 17	1,3	5	16	03094-91
03093-21206	**03093-22206**	6	M12x1,5	25	54,7	28	17,7	9	- / 19	1,8	6	18	03094-92
03093-21308	**03093-22308**	8	M16x1,5	33	72	36	24	12	- / 24	2,3	15	45	03094-93
03093-21410	**03093-22410**	10	M20x1,5	33	79	40	24	15	- / 30	2,8	15	43	03094-94
03093-21412	**03093-22412**	12	M20x1,5	33	84	42	24	18	- / 30	2,8	15	51	03094-94
03093-21516	**03093-22516**	16	M24x2	40	104	50	30	24	- / 36	3,2	20	60	03094-95

Indexing plungers without collar with extended indexing pin, stainless steel, indexing pin hardened

Order No. Form G	Order No. Form H	D	D1	D2	L	L1	L2	H	SW	Fx30°	Spring force initial pressure F1 approx. N	Spring force final pressure F2 approx. N	Order No. screw-in washer
03093-201903	**03093-202903**	3	M6x0,75	14	33	17	11	5	- / 10	0,8	4,5	12	03094-99
03093-201004	**03093-202004**	4	M8x1	18	40,5	21	13,5	6	- / 13	1	6	15	03094-90
03093-201105	**03093-202105**	5	M10x1	21	46,5	24	14,5	8	- / 17	1,3	5	16	03094-91
03093-201206	**03093-202206**	6	M12x1,5	25	54,7	28	17,7	9	- / 19	1,8	6	18	03094-92
03093-201308	**03093-202308**	8	M16x1,5	33	72	36	24	12	- / 24	2,3	15	45	03094-93
03093-201410	**03093-202410**	10	M20x1,5	33	79	40	24	15	- / 30	2,8	15	43	03094-94
03093-201412	**03093-202412**	12	M20x1,5	33	84	42	24	18	- / 30	2,8	15	51	03094-94
03093-201516	**03093-202516**	16	M24x2	40	104	50	30	24	- / 36	3,2	20	60	03094-95

Indexing plungers without collar with extended indexing pin, stainless steel, indexing pin not hardened

Order No. Form G	Order No. Form H	D	D1	D2	L	L1	L2	H	SW	Fx30°	Spring force initial pressure F1 approx. N	Spring force final pressure F2 approx. N	Order No. screw-in washer
03093-211903	**03093-212903**	3	M6x0,75	14	33	17	11	5	- / 10	0,8	4,5	12	03094-99
03093-211004	**03093-212004**	4	M8x1	18	40,5	21	13,5	6	- / 13	1	6	15	03094-90
03093-211105	**03093-212105**	5	M10x1	21	46,5	24	14,5	8	- / 17	1,3	5	16	03094-91
03093-211206	**03093-212206**	6	M12x1,5	25	54,7	28	17,7	9	- / 19	1,8	6	18	03094-92
03093-211308	**03093-212308**	8	M16x1,5	33	72	36	24	12	- / 24	2,3	15	45	03094-93
03093-211410	**03093-212410**	10	M20x1,5	33	79	40	24	15	- / 30	2,8	15	43	03094-94
03093-211412	**03093-212412**	12	M20x1,5	33	84	42	24	18	- / 30	2,8	15	51	03094-94
03093-211516	**03093-212516**	16	M24x2	40	104	50	30	24	- / 36	3,2	20	60	03094-95

Indexing plungers stainless steel

without collar

Material:
Indexing pin hardened:
Threaded sleeve 1.4305.
Indexing pin 1.4034.

Indexing pin not hardened:
Threaded sleeve 1.4305.
Indexing pin 1.4305.

Mushroom knob 1.4305, electrolytic-polish.

Version:
Bright.
Indexing pin ground.

Sample order:
nlm 03093-001004

Note:
Indexing plungers are used to prevent any change in locking position due to lateral forces. A new locking position can only be set after the pin has been manually disengaged.
A screw-in washer can be supplied to help screw in the indexing plungers. The washer is slid beneath the disengaged mushroom knob so that the follower pins engage in the slot.

On request:
Special versions.

Accessories:
Spacer rings 03089

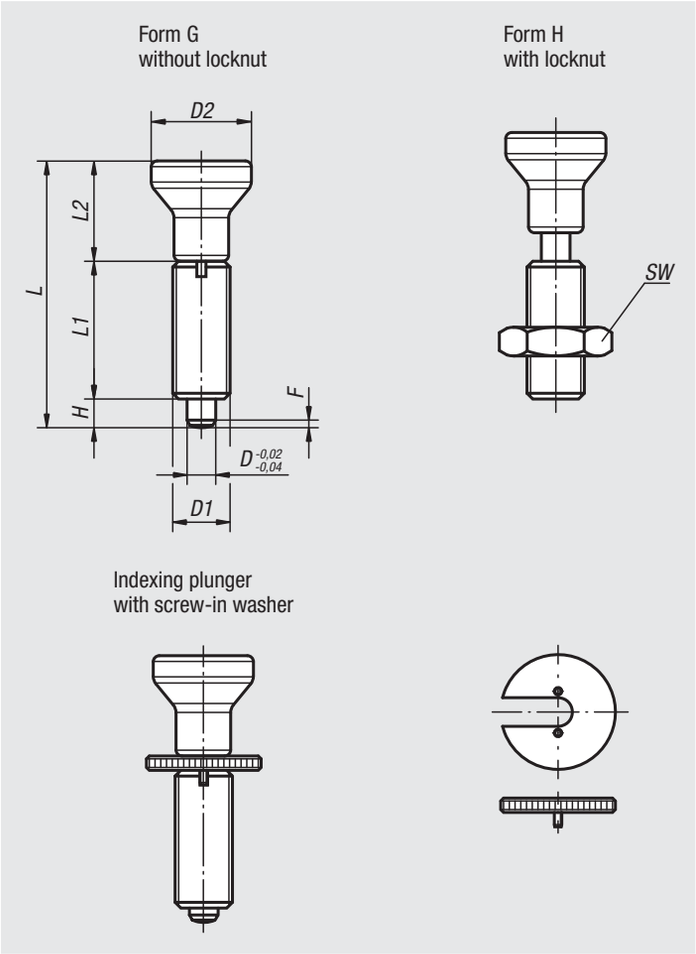

Indexing plungers stainless steel

without collar

Indexing plungers stainless steel without collar, indexing pin hardened

Order No. Form G	Order No. Form H	D	D1	D2	L	L1	L2	H	SW	Fx30°	Spring force initial pressure F1 approx. N	Spring force final pressure F2 approx. N	Order No. screw-in washer
03093-001903	**03093-002903**	3	M6x0,75	14	34,5	17	14	3,5	-/10	0,8	4,5	10	03094-99
03093-001004	**03093-002004**	4	M8x1	18	43	21	18	4	-/13	1	6	12	03094-90
03093-001105	**03093-002105**	5	M10x1	21	50	24	21	5	-/17	1,3	5	12	03094-91
03093-001206	**03093-002206**	6	M12x1,5	25	59	28	25	6	-/19	1,8	6	14	03094-92
03093-001308	**03093-002308**	8	M16x1,5	33	77	36	33	8	-/24	2,3	15	35	03094-93
03093-001410	**03093-002410**	10	M20x1,5	33	83	40	33	10	-/30	2,8	15	34	03094-94
03093-001412	**03093-002412**	12	M20x1,5	33	87	42	33	12	-/30	2,8	15	39	03094-94
03093-001516	**03093-002516**	16	M24x2	40	106	50	40	16	-/36	3,2	20	46	03094-95

Indexing plungers stainless steel without collar, indexing pin not hardened

Order No. Form G	Order No. Form H	D	D1	D2	L	L1	L2	H	SW	Fx30°	Spring force initial pressure F1 approx. N	Spring force final pressure F2 approx. N	Order No. screw-in washer
03093-111903	**03093-112903**	3	M6x0,75	14	34,5	17	14	3,5	-/10	0,8	4,5	10	03094-99
03093-111004	**03093-112004**	4	M8x1	18	43	21	18	4	-/13	1	6	12	03094-90
03093-111105	**03093-112105**	5	M10x1	21	50	24	21	5	-/17	1,3	5	12	03094-91
03093-111206	**03093-112206**	6	M12x1,5	25	59	28	25	6	-/19	1,8	6	14	03094-92
03093-111308	**03093-112308**	8	M16x1,5	33	77	36	33	8	-/24	2,3	15	35	03094-93
03093-111410	**03093-112410**	10	M20x1,5	33	83	40	33	10	-/30	2,8	15	34	03094-94
03093-111412	**03093-112412**	12	M20x1,5	33	87	42	33	12	-/30	2,8	15	39	03094-94
03093-111516	**03093-112516**	16	M24x2	40	106	50	40	16	-/36	3,2	20	46	03094-95

Indexing plungers

without collar

Material:
Steel version:
Indexing pin hardened:
grade 5.8.

Stainless steel version,
Indexing pin hardened
Threaded sleeve 1.4305
Indexing pin 1.4034

Indexing pin not hardened
Threaded sleeve 1.4305
Indexing pin 1.4305

Mushroom knob black grey thermoplastic

Version:
Steel version:
Indexing pin hardened, ground, black oxidised.

Stainless steel version:
Indexing pin hardened, ground and bright.
Indexing pin not hardened, ground and bright.

Sample order:
nlm 03094-02206

Note:
Indexing plungers are used to prevent any change in locking position due to lateral forces. A new locking position can only be set after the pin has been manually disengaged.
A screw-in washer can be supplied to help screw in the indexing plungers. The washer is slid beneath the disengaged mushroom knob so that the carrier pins engage in the slot.

On request:
Special versions.

Accessories:
Spacer rings 03089

Form G
without locknut

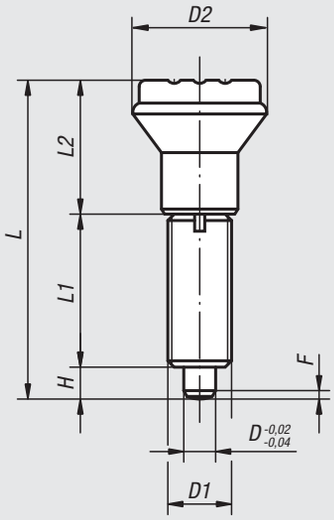

Form H
with locknut

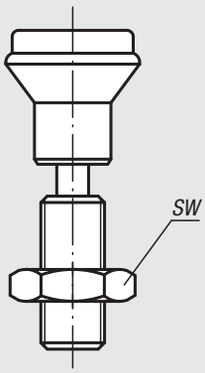

Indexing plunger
with screw-in washer

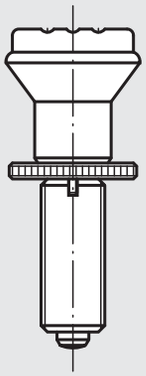

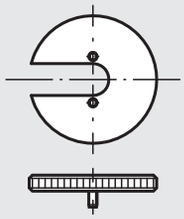

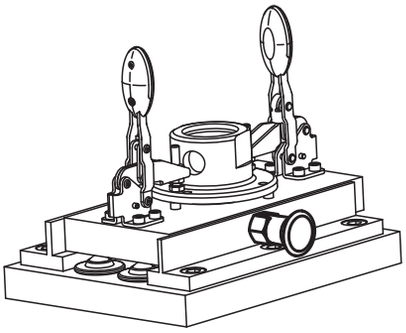

Indexing plungers

without collar

Indexing plungers without collar, steel, indexing pin hardened

Order No. Form G	Order No. Form H	D	D1	D2	L	L1	L2	H	SW	Fx30°	Spring force initial pressure F1 approx. N	Spring force final pressure F2 approx. N	Order No. screw-in washer
03094-1105	**03094-2105**	5	M10x1	21	47	24	18	5	-/17	1,3	5	12	03094-91
03094-1206	**03094-2206**	6	M12x1,5	25	56	28	22	6	-/19	1,8	6	14	03094-92
03094-1308	**03094-2308**	8	M16X1,5	33	74	36	30	8	-/24	2,3	15	35	03094-93
03094-1410	**03094-2410**	10	M20x1,5	33	80	40	30	10	-/30	2,8	15	34	03094-94

Indexing plungers without collar, stainless steel, indexing pin hardened

Order No. Form G	Order No. Form H	D	D1	D2	L	L1	L2	H	SW	Fx30°	Spring force initial pressure F1 approx. N	Spring force final pressure F2 approx. N	Order No. screw-in washer
03094-01105	**03094-02105**	5	M10x1	21	47	24	18	5	-/17	1,3	5	12	03094-91
03094-01206	**03094-02206**	6	M12x1,5	25	56	28	22	6	-/19	1,8	6	14	03094-92
03094-01308	**03094-02308**	8	M16X1,5	33	74	36	30	8	-/24	2,3	15	35	03094-93
03094-01410	**03094-02410**	10	M20x1,5	33	80	40	30	10	-/30	2,8	15	34	03094-94

Indexing plungers without collar, stainless steel, indexing pin not hardened

Order No. Form G	Order No. Form H	D	D1	D2	L	L1	L2	H	SW	Fx30°	Spring force initial pressure F1 approx. N	Spring force final pressure F2 approx. N	Order No. screw-in washer
03094-11105	**03094-12105**	5	M10x1	21	47	24	18	5	-/17	1,3	5	12	03094-91
03094-11206	**03094-12206**	6	M12x1,5	25	56	28	22	6	-/19	1,8	6	14	03094-92
03094-11308	**03094-12308**	8	M16X1,5	33	74	36	30	8	-/24	2,3	15	35	03094-93
03094-11410	**03094-12410**	10	M20x1,5	33	80	40	30	10	-/30	2,8	15	34	03094-94

Indexing plunger, pneumatic

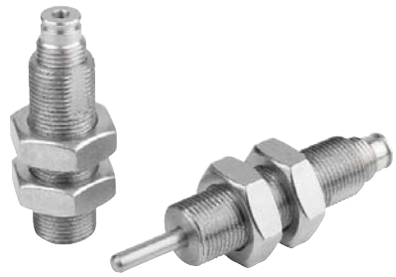

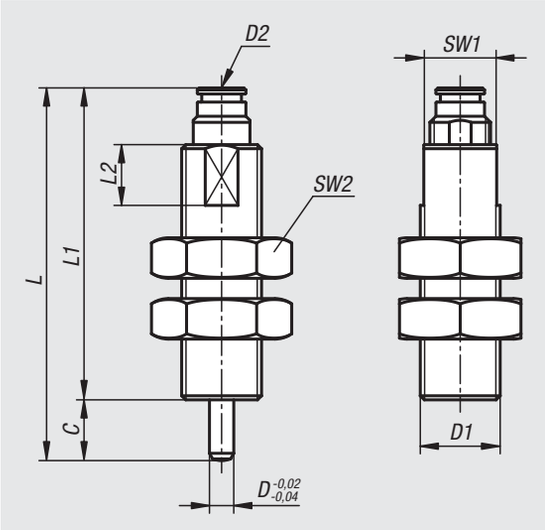

Material:
Steel version:
threaded sleeve and thrust pin, free-cutting steel.
Hexagon nuts, steel, grade 04.
Stainless steel version:
threaded sleeve 1.4305
thrust pin 1.4034
hexagon nuts, A2 stainless steel.

Version:
Steel version:
threaded sleeve, black oxidised.
thrust pin hardened, black oxidised and ground
hexagon nuts, black oxidised
Stainless steel version:
threaded sleeve, bright.
thrust pin, hardened, ground and bright
hexagon nuts, bright

Sample order:
nlm 03095-1206010

Pneumatic cylinder:
Single-acting piston rod cylinder.
Materials:
cylinder tube, nickel-plated brass,
piston rod, stainless steel
seals, NBR, PU.
Operating medium:
filtered and dried air, oiled or not oiled.
Application temperature: -20 °C to +80 °C.

Order No. steel	Order No. stainless steel	D	D1	D2	C (travel)	L	L1	L2	SW1	SW2	Operating pressure bar	Piston force at 6 bar (N)	Spring retraction force ca. N
03095-1206010	**03095-01206010**	6	M20x1,5	M5	10	80	70	15	18	30	2 - 6	38,7-35,1	9,9-6
03095-1206015	**03095-01206015**	6	M20x1,5	M5	15	92	77	15	18	30	2 - 6	38,7-32,9	11,8-6
03095-1308010	**03095-01308010**	8	M20x1,5	M5	10	77	67	15	18	30	2 - 6	39,6-35,3	11,6-5,1
03095-1308015	**03095-01308015**	8	M20x1,5	M5	15	89	74	15	18	30	2 - 6	39,6-33,1	11,6-5,1

Notes

Indexing plungers

without collar

Material:
Steel version:
Indexing pin hardened:
grade 5.8.

Stainless steel version:
Indexing pin hardened:
Threaded sleeve 1.4305.
Indexing pin 1.4034.

Indexing pin not hardened:
Threaded sleeve 1.4305.
Indexing pin 1.4305.

Version:
Steel version:
Indexing pin hardened, ground, black oxidised.

Stainless steel version:
Indexing pin hardened, ground and bright.
Indexing pin not hardened, ground and bright.

Sample order:
nlm 03096-01206

Note:
Indexing plungers are used to prevent any change in locking position due to lateral forces. A new locking position can only be set after the pin has been disengaged.
Special grips can be fitted on the projecting threaded pin. This pin is also suitable for automatic actuation by e.g. program controlled pneumatic cylinder or by remote control using bowden cables.
A washer is available to aid screwing in the indexing plungers. The washer is placed on the threaded sleeve so that the carrier pins engage in the slot.

On request:
Special versions.

Accessories:
Spacer rings 03089

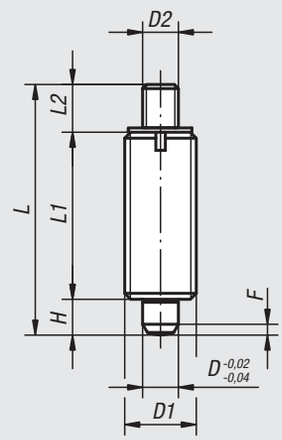

Form J
with threaded pin
without locknut

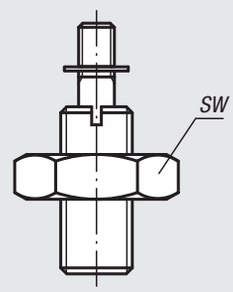

Form K
with threaded pin
with locknut

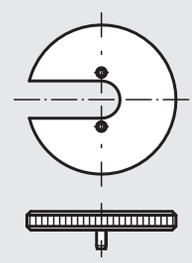

Indexing plungers

without collar

Indexing plungers without collar, steel, indexing pin hardened

Order No. Form J	Order No. Form K	D	D1	D2	L	L1	L2	H	SW	Fx30°	Spring force initial pressure F1 approx. N	Spring force final pressure F2 approx. N	Order No. screw-in washer
03096-1903	**03096-2903**	3	M6x0,75	M2	24	17	3,5	3,5	-/10	0,8	4,5	10	03094-99
03096-1004	**03096-2004**	4	M8x1	M3	32	21	7	4	-/13	1	6	12	03094-90
03096-1105	**03096-2105**	5	M10x1	M4	37	24	8	5	-/17	1,3	5	12	03094-91
03096-1206	**03096-2206**	6	M12x1,5	M6	42	28	8	6	-/19	1,8	6	14	03094-92
03096-1308	**03096-2308**	8	M16x1,5	M8	56	36	12	8	-/24	2,3	15	35	03094-93
03096-1410	**03096-2410**	10	M20x1,5	M8	62	40	12	10	-/30	2,8	15	34	03094-94
03096-1412	**03096-2412**	12	M20x1,5	M8	66	42	12	12	-/30	2,8	15	39	03094-94
03096-1516	**03096-2516**	16	M24x2	M10	80	50	14	16	-/36	3,2	20	46	03094-95

Indexing plungers without collar, stainless steel, indexing pin hardened

Order No. Form J	Order No. Form K	D	D1	D2	L	L1	L2	H	SW	Fx30°	Spring force initial pressure F1 approx. N	Spring force final pressure F2 approx. N	Order No. screw-in washer
03096-01903	**03096-02903**	3	M6x0,75	M2	24	17	3,5	3,5	-/10	0,8	4,5	10	03094-99
03096-01004	**03096-02004**	4	M8x1	M3	32	21	7	4	-/13	1	6	12	03094-90
03096-01105	**03096-02105**	5	M10x1	M4	37	24	8	5	-/17	1,3	5	12	03094-91
03096-01206	**03096-02206**	6	M12x1,5	M6	42	28	8	6	-/19	1,8	6	14	03094-92
03096-01308	**03096-02308**	8	M16x1,5	M8	56	36	12	8	-/24	2,3	15	35	03094-93
03096-01410	**03096-02410**	10	M20x1,5	M8	62	40	12	10	-/30	2,8	15	34	03094-94
03096-01412	**03096-02412**	12	M20x1,5	M8	66	42	12	12	-/30	2,8	15	39	03094-94
03096-01516	**03096-02516**	16	M24x2	M10	80	50	14	16	-/36	3,2	20	46	03094-95

Indexing plungers without collar, stainless steel, indexing pin not hardened

Order No. Form J	Order No. Form K	D	D1	D2	L	L1	L2	H	SW	Fx30°	Spring force initial pressure F1 approx. N	Spring force final pressure F2 approx. N	Order No. screw-in washer
03096-11903	**03096-12903**	3	M6x0,75	M2	24	17	3,5	3,5	-/10	0,8	4,5	10	03094-99
03096-11004	**03096-12004**	4	M8x1	M3	32	21	7	4	-/13	1	6	12	03094-90
03096-11105	**03096-12105**	5	M10x1	M4	37	24	8	5	-/17	1,3	5	12	03094-91
03096-11206	**03096-12206**	6	M12x1,5	M6	42	28	8	6	-/19	1,8	6	14	03094-92
03096-11308	**03096-12308**	8	M16x1,5	M8	56	36	12	8	-/24	2,3	15	35	03094-93
03096-11410	**03096-12410**	10	M20x1,5	M8	62	40	12	10	-/30	2,8	15	34	03094-94
03096-11412	**03096-12412**	12	M20x1,5	M8	66	42	12	12	-/30	2,8	15	39	03094-94
03096-11516	**03096-12516**	16	M24x2	M10	80	50	14	16	-/36	3,2	20	46	03094-95

Indexing plungers

without collar

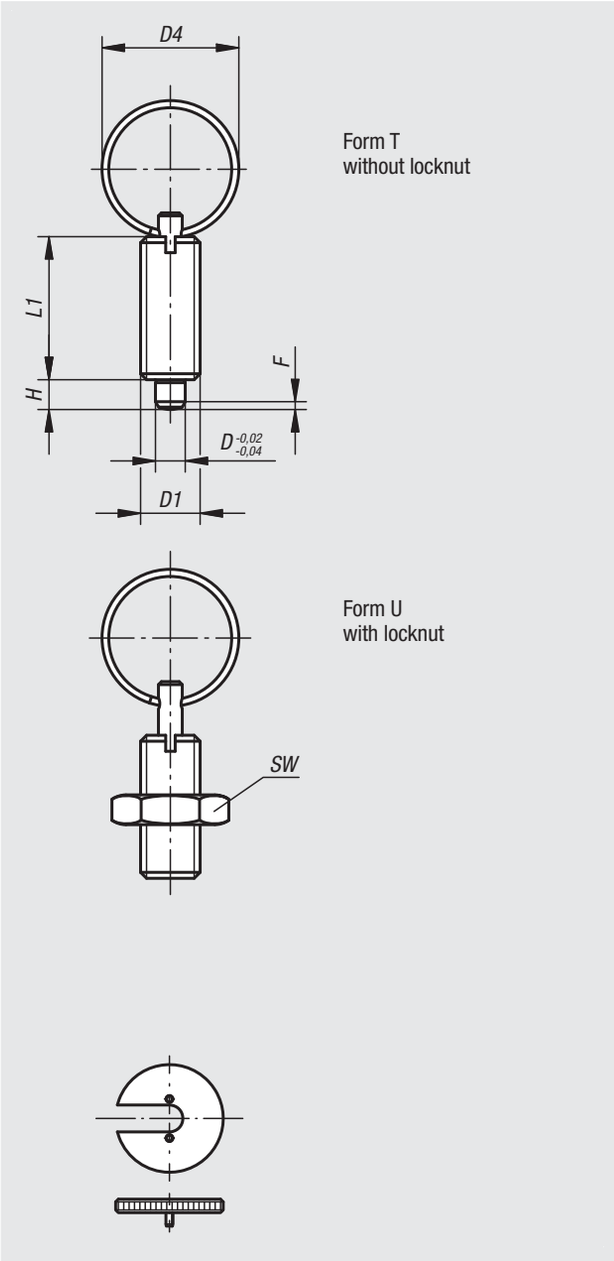

Material:
Steel version:
Indexing pin hardened:
grade 5.8.

Stainless steel version:
Indexing pin hardened:
Threaded sleeve 1.4305
Indexing pin 1.4034

Indexing pin not hardened
Threaded sleeve 1.4305
Indexing pin 1.4305

Key ring 1.4310, bright.

Version:
Steel version:
Indexing pin hardened, ground, black oxidised.

Stainless steel version:
Indexing pin hardened, ground and bright.
Indexing pin not hardened, ground and bright.

Sample order:
nlm 03096-03206

Note:
Indexing plungers are used to prevent any change in locking position due to lateral forces. A new locking position can only be set after the pin has been disengaged.
The key ring is also suitable for actuation of the indexing plungers e.g. automatically (program-controlled) with the aid of a pneumatic cylinder or remote control with bowden cables.
A screw-in washer can be supplied to help screw in the indexing plungers. The washer is fitted onto the threaded sleeve so that the carrier pins engage in the slot.

On request:
Special versions.

Accessories:
Spacer rings 03089

Indexing plungers

without collar

Indexing plungers without collar, steel, indexing pin hardened

Order No. Form T	Order No. Form U	D	D1	D4	L1	H	SW	Fx30°	Spring force initial pressure F1 approx. N	Spring force final pressure F2 approx. N	Order No. screw-in washer
03096-3004	**03096-4004**	4	M8x1	15	21	4	-/13	1	6	12	03094-90
03096-3105	**03096-4105**	5	M10x1	23	24	5	-/17	1,3	5	12	03094-91
03096-3206	**03096-4206**	6	M12x1,5	23	28	6	-/19	1,8	6	14	03094-92
03096-3308	**03096-4308**	8	M16x1,5	28	36	8	-/24	2,3	15	35	03094-93
03096-3410	**03096-4410**	10	M20x1,5	28	40	10	-/30	2,8	15	34	03094-94

Indexing plungers without collar, stainless steel, indexing pin hardened

Order No. Form T	Order No. Form U	D	D1	D4	L1	H	SW	Fx30°	Spring force initial pressure F1 approx. N	Spring force final pressure F2 approx. N	Order No. screw-in washer
03096-03004	**03096-04004**	4	M8x1	15	21	4	-/13	1	6	12	03094-90
03096-03105	**03096-04105**	5	M10x1	23	24	5	-/17	1,3	5	12	03094-91
03096-03206	**03096-04206**	6	M12x1,5	23	28	6	-/19	1,8	6	14	03094-92
03096-03308	**03096-04308**	8	M16x1,5	28	36	8	-/24	2,3	15	35	03094-93
03096-03410	**03096-04410**	10	M20x1,5	28	40	10	-/30	2,8	15	34	03094-94

Indexing plungers without collar, stainless steel, indexing pin not hardened

Order No. Form T	Order No. Form U	D	D1	D4	L1	H	SW	Fx30°	Spring force initial pressure F1 approx. N	Spring force final pressure F2 approx. N	Order No. screw-in washer
03096-13004	**03096-14004**	4	M8x1	15	21	4	-/13	1	6	12	03094-90
03096-13105	**03096-14105**	5	M10x1	23	24	5	-/17	1,3	5	12	03094-91
03096-13206	**03096-14206**	6	M12x1,5	23	28	6	-/19	1,8	6	14	03094-92
03096-13308	**03096-14308**	8	M16x1,5	28	36	8	-/24	2,3	15	35	03094-93
03096-13410	**03096-14410**	10	M20x1,5	28	40	10	-/30	2,8	15	34	03094-94

Indexing plungers

without collar

Material:
Steel version:
Indexing pin hardened:
Sleeve 1.0403 weldable.
Indexing pin grade 5.8

Stainless steel version:
Indexing pin hardened
Sleeve1.4301 weldable.
Indexing pin 1.4034.

Indexing pin not hardened:
Sleeve 1.4301 weldable.
Indexing pin 1.4305.

Mushroom knob black grey thermoplastic.

Version:
Steel version:
Indexing pin hardened, ground, black oxidised.

Stainless steel version:
Indexing pin hardened, ground and bright.
Indexing pin not hardened, ground and bright.

Sample order:
nlm 03097-01206

Note:
Indexing plungers are used to prevent any change in locking position due to lateral forces. A new locking position can only be set after the pin has been manually disengaged.
Form M is recommended for applications in where the indexing plungers should remain disengaged over extended periods and the pin prevented from springing back.
To weld the indexing plungers we recommend inert gas-shielded welding with TIG welding equipment.

On request:
Special versions.

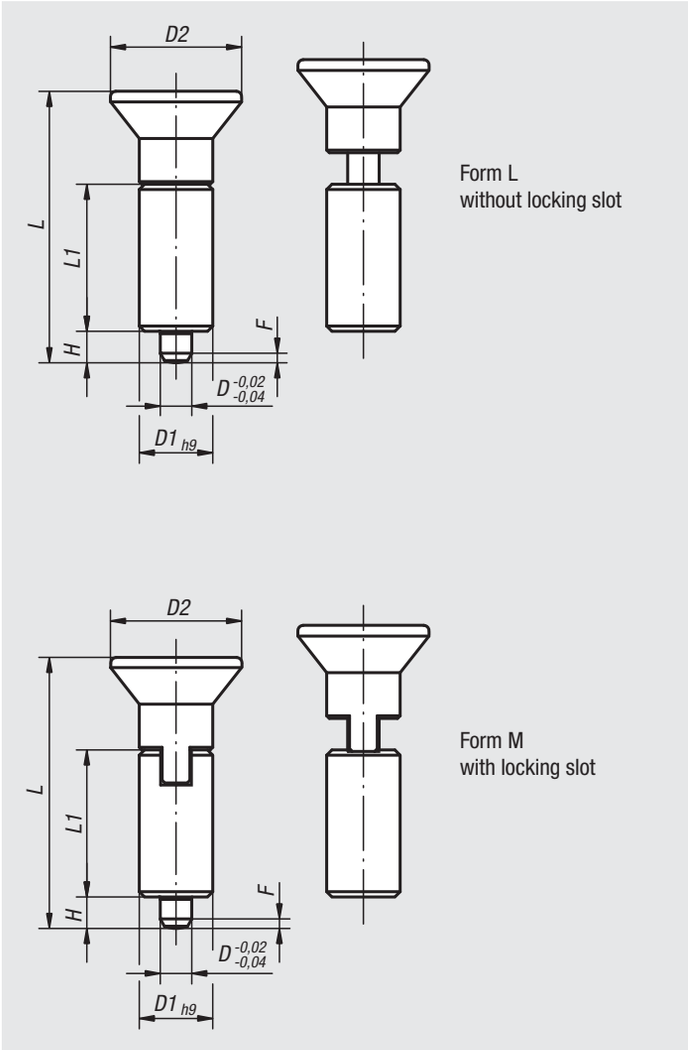

Indexing plungers

without collar

Indexing plungers without collar, steel, indexing pin hardened

Order No. Form L	Order No. Form M	D	D1	D2	L	L1	H	Fx30°	Spring force initial pressure F1 approx. N	Spring force final pressure F2 approx. N
03097-1004	03097-2004	4	10	18	38,5	21	4	1	6	12
03097-1105	03097-2105	5	12	21	43,5	24	5	1,3	5	12
03097-1206	03097-2206	6	14	25	51,7	28	6	1,8	6	14
03097-1308	03097-2308	8	18	33	68	36	8	2,3	15	35
03097-1410	03097-2410	10	22	33	74	40	10	2,8	15	34

Indexing plungers without collar, stainless steel, indexing pin hardened

Order No. Form L	Order No. Form M	D	D1	D2	L	L1	H	Fx30°	Spring force initial pressure F1 approx. N	Spring force final pressure F2 approx. N
03097-01004	03097-02004	4	10	18	38,5	21	4	1	6	12
03097-01105	03097-02105	5	12	21	43,5	24	5	1,3	5	12
03097-01206	03097-02206	6	14	25	51,7	28	6	1,8	6	14
03097-01308	03097-02308	8	18	33	68	36	8	2,3	15	35
03097-01410	03097-02410	10	22	33	74	40	10	2,8	15	34

Indexing plungers without collar, stainless steel, indexing pin not hardened

Order No. Form L	Order No. Form M	D	D1	D2	L	L1	H	Fx30°	Spring force initial pressure F1 approx. N	Spring force final pressure F2 approx. N
03097-11004	03097-12004	4	10	18	38,5	21	4	1	6	12
03097-11105	03097-12105	5	12	21	43,5	24	5	1,3	5	12
03097-11206	03097-12206	6	14	25	51,7	28	6	1,8	6	14
03097-11308	03097-12308	8	18	33	68	36	8	2,3	15	35
03097-11410	03097-12410	10	22	33	74	40	10	2,8	15	34

Indexing plungers

without collar

Material:
Steel version:
Indexing pin hardened:
Sleeve1.0403 weldable.
Indexing pin grade 5.8.

Stainless steel version:
Indexing pin hardened:
Sleeve 1.4301 weldable.
Indexing pin 1.4034.

Indexing pin not hardened:
Sleeve 1.4301 weldable.
Indexing pin 1.4305.

Mushroom knob black grey thermoplastic.

Version:
Steel version:
Indexing pin hardened, ground, black oxidised.

Stainless steel version:
Indexing pin hardened, ground and bright.
Indexing pin not hardened, ground and bright.

Sample order:
nlm 03098-02206

Note:
Indexing plungers are used to prevent any change in locking position due to lateral forces. A new locking position can only be set after the pin has been manually disengaged.
Form M is recommended for applications where the indexing plungers should remain disengaged over an extended period and the pin prevented from springing back.
Special grips can be fitted on the projecting threaded pin of Form N. This pin is also suitable for actuating the indexing plunger e.g. automatically (program-controlled) with the aid of a pneumatic cylinder or remote controlled with bowden cables.
To weld the indexing plungers we recommend inert gas shielded welding with TIG welding equipment.

On request:
Special versions.

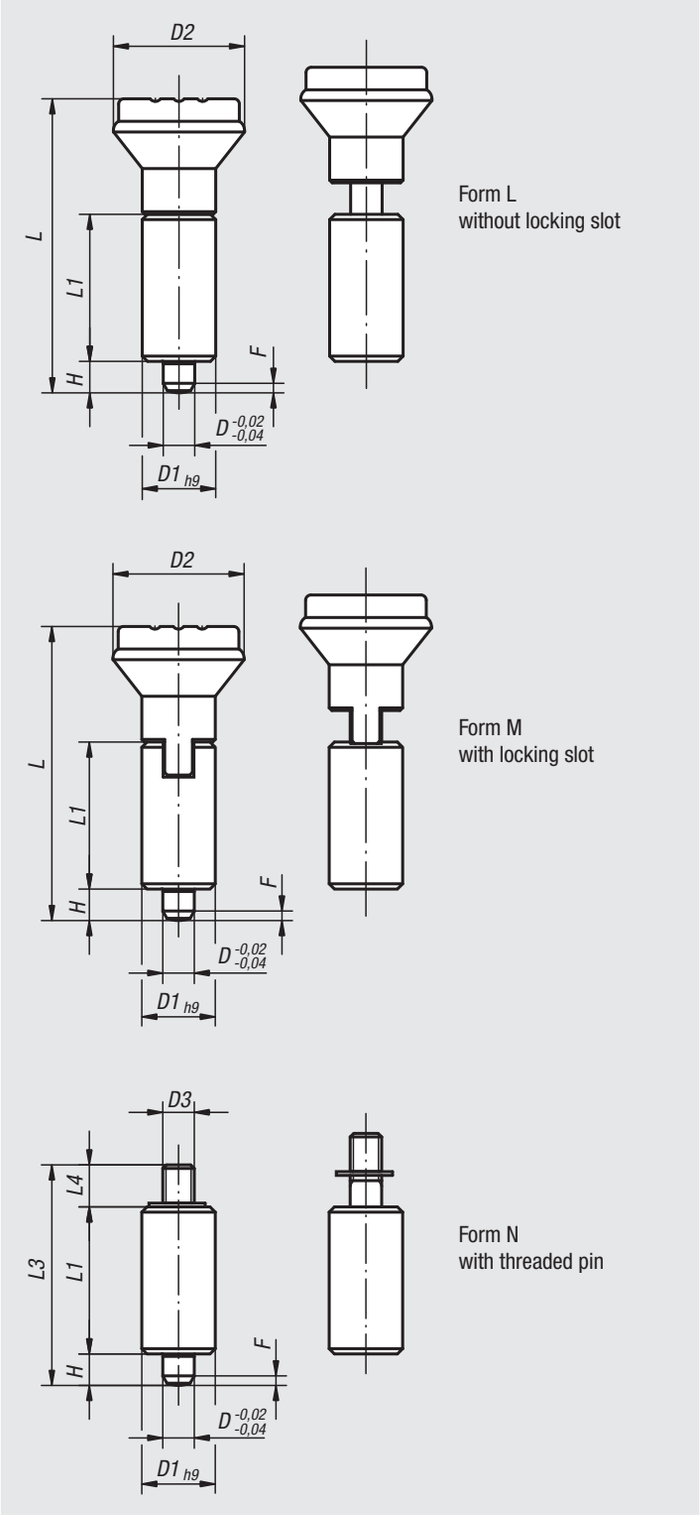

Indexing plungers

without collar

Indexing plungers without collar, steel, indexing pin hardened

Order No. Form L	Order No. Form M	Order No. Form N	D	D1	D2	D3	L	L1	L3	L4	H	Fx30°	Spring force initial pressure F1 approx. N	Spring force final pressure F2 approx. N
03098-1105	**03098-2105**	**03098-3105**	5	12	21/21/-	-/-/M4	47/47/-	24	-/-/37	-/-/8	5	1,3	5	12
03098-1206	**03098-2206**	**03098-3206**	6	14	25/25/-	-/-/M6	56/56/-	28	-/-/43	-/-/9	6	1,8	6	14
03098-1308	**03098-2308**	**03098-3308**	8	18	33/33/-	-/-/M8	74/74/-	36	-/-/56	-/-/12	8	2,3	15	35
03098-1410	**03098-2410**	**03098-3410**	10	22	33/33/-	-/-/M8	80/80/-	40	-/-/62	-/-/12	10	2,8	15	34

Indexing plungers without collar, stainless steel, indexing pin hardened

Order No. Form L	Order No. Form M	Order No. Form N	D	D1	D2	D3	L	L1	L3	L4	H	Fx30°	Spring force initial pressure F1 approx. N	Spring force final pressure F2 approx. N
03098-01105	**03098-02105**	**03098-03105**	5	12	21/21/-	-/-/M4	47/47/-	24	-/-/37	-/-/8	5	1,3	5	12
03098-01206	**03098-02206**	**03098-03206**	6	14	25/25/-	-/-/M6	56/56/-	28	-/-/43	-/-/9	6	1,8	6	14
03098-01308	**03098-02308**	**03098-03308**	8	18	33/33/-	-/-/M8	74/74/-	36	-/-/56	-/-/12	8	2,3	15	35
03098-01410	**03098-02410**	**03098-03410**	10	22	33/33/-	-/-/M8	80/80/-	40	-/-/62	-/-/12	10	2,8	15	34

Indexing plungers without collar, stainless steel, indexing pin not hardened

Order No. Form L	Order No. Form M	Order No. Form N	D	D1	D2	D3	L	L1	L3	L4	H	Fx30°	Spring force initial pressure F1 approx. N	Spring force final pressure F2 approx. N
03098-11105	**03098-12105**	**03098-13105**	5	12	21/21/-	-/-/M4	47/47/-	24	-/-/37	-/-/8	5	1,3	5	12
03098-11206	**03098-12206**	**03098-13206**	6	14	25/25/-	-/-/M6	56/56/-	28	-/-/43	-/-/9	6	1,8	6	14
03098-11308	**03098-12308**	**03098-13308**	8	18	33/33/-	-/-/M8	74/74/-	36	-/-/56	-/-/12	8	2,3	15	35
03098-11410	**03098-12410**	**03098-13410**	10	22	33/33/-	-/-/M8	80/80/-	40	-/-/62	-/-/12	10	2,8	15	34

Indexing plungers

without collar

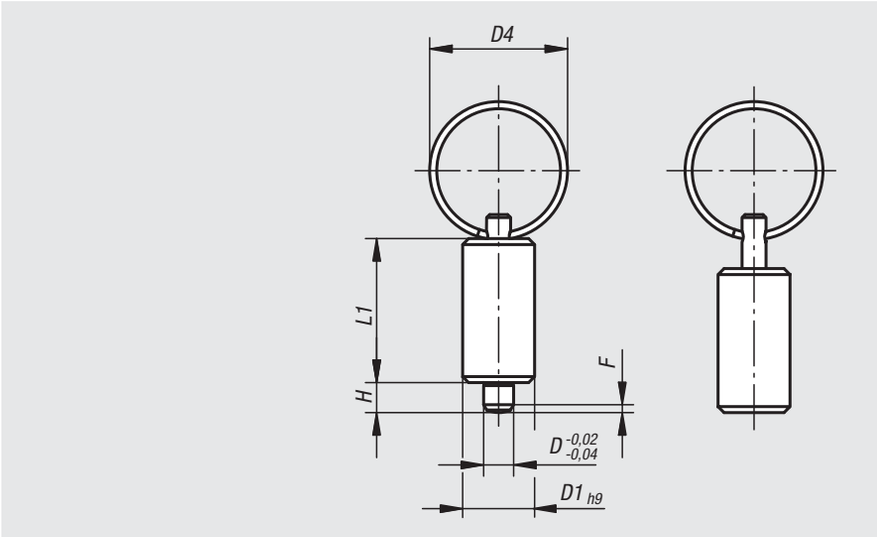

Material:
Steel version:
Indexing pin hardened.
Sleeve1.0403 weldable.
Indexing pin grade 5.8.

Stainless steel version:
Indexing pin hardened:
Sleeve 1.4301 weldable.
Indexing pin 1.4034.

Indexing pin not hardened:
Sleeve 1.4301 weldable.
Indexing pin 1.4305.

Key ring 1.4310, bright.

Version:
Steel version:
Indexing pin hardened, ground, black oxidised.

Stainless steel version:
Indexing pin hardened, ground and bright.
Indexing pin not hardened, ground and bright.

Sample order:
nlm 03098-4206

Note:
Indexing plungers are used to prevent any change in locking position due to lateral forces. A new locking position can only be set after the pin has been disengaged.
The key ring is also suitable for actuating the indexing plungers e.g. automatically (program-controlled) with the aid of a pneumatic cylinder or remote controlled with bowden cables.
To weld the indexing plungers we recommend inert gas shielded welding with TIG welding equipment.

On request:
Special versions.

Order No.	Main material	Version	D	D1	D4	L1	H	Fx30°	Spring force initial pressure F1 approx. N	Spring force final pressure F2 approx. N
03098-4004	Steel	hardened	4	10	15	21	4	1	6	12
03098-4105	Steel	hardened	5	12	23	24	5	1,3	5	12
03098-4206	Steel	hardened	6	14	23	28	6	1,8	6	14
03098-4308	Steel	hardened	8	18	28	36	8	2,3	15	35
03098-4410	Steel	hardened	10	22	28	40	10	2,8	15	34

Order No.	Main material	Version	D	D1	D4	L1	H	Fx30°	Spring force initial pressure F1 approx. N	Spring force final pressure F2 approx. N
03098-04004	Stainless steel	hardened	4	10	15	21	4	1	6	12
03098-04105	Stainless steel	hardened	5	12	23	24	5	1,3	5	12
03098-04206	Stainless steel	hardened	6	14	23	28	6	1,8	6	14
03098-04308	Stainless steel	hardened	8	18	28	36	8	2,3	15	35
03098-04410	Stainless steel	hardened	10	22	28	40	10	2,8	15	34

Order No.	Main material	Version	D	D1	D4	L1	H	Fx30°	Spring force initial pressure F1 approx. N	Spring force final pressure F2 approx. N
03098-14004	Stainless steel	not hardened	4	10	15	21	4	1	6	12
03098-14105	Stainless steel	not hardened	5	12	23	24	5	1,3	5	12
03098-14206	Stainless steel	not hardened	6	14	23	28	6	1,8	6	14
03098-14308	Stainless steel	not hardened	8	18	28	36	8	2,3	15	35
03098-14410	Stainless steel	not hardened	10	22	28	40	10	2,8	15	34

Cam-action indexing plungers

Material:
Steel grade 5.8.

Version:
Black oxidised.
Pin hardened and ground.

Sample order:
nlm 03099-040616

Note:
Cam-action indexing plungers are used when the indexing pin should not project all the time. Turning the handle through 180° retracts the pin.
A notch ensures that the handle remains in this position.

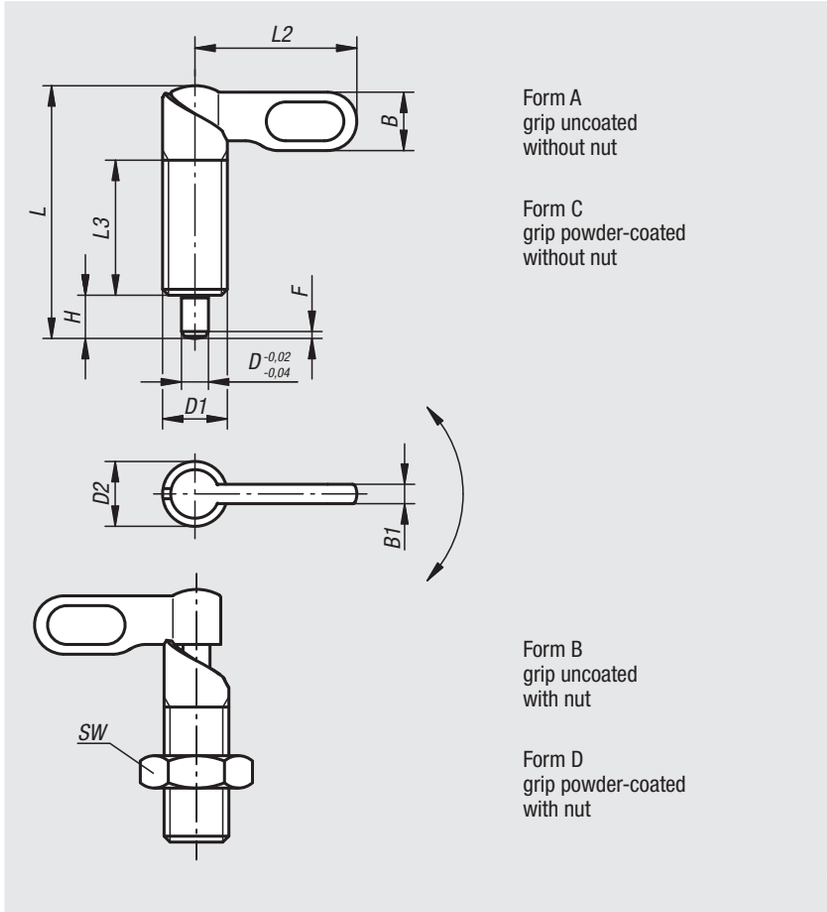

Order No. Form A	Order No. Form C	Order No. Form B	Order No. Form D	D	D1	D2	L	L2	L3	B	B1	H	SW	Fx30°	Spring force initial pressure F1 approx. N	Spring force final pressure F2 approx. N
03099-040410	03099-060410	03099-050410	03099-070410	4	M10	10	38	25	20	9	3	6	-/-/17/17	1	8	14
03099-040510	03099-060510	03099-050510	03099-070510	5	M10	10	38	25	20	9	3	6	-/-/17/17	1,3	8	14
03099-040610	03099-060610	03099-050610	03099-070610	6	M10	10	38	25	20	9	3	6	-/-/17/17	1,8	8	14
03099-0404101	03099-0604101	03099-0504101	03099-0704101	4	M10x1	10	38	25	20	9	3	6	-/-/17/17	1	8	14
03099-0405101	03099-0605101	03099-0505101	03099-0705101	5	M10x1	10	38	25	20	9	3	6	-/-/17/17	1,3	8	14
03099-0406101	03099-0606101	03099-0506101	03099-0706101	6	M10x1	10	38	25	20	9	3	6	-/-/17/17	1,8	8	14
03099-040512	03099-060512	03099-050512	03099-070512	5	M12	12	46,8	30	25	10,8	3,6	8	-/-/19/19	1,3	8	15
03099-040612	03099-060612	03099-050612	03099-070612	6	M12	12	46,8	30	25	10,8	3,6	8	-/-/19/19	1,8	8	15
03099-040812	03099-060812	03099-050812	03099-070812	8	M12	12	46,8	30	25	10,8	3,6	8	-/-/19/19	2,3	8	15
03099-0405121	03099-0605121	03099-0505121	03099-0705121	5	M12x1,5	12	46,8	30	25	10,8	3,6	8	-/-/19/19	1,3	8	15
03099-0406121	03099-0606121	03099-0506121	03099-0706121	6	M12x1,5	12	46,8	30	25	10,8	3,6	8	-/-/19/19	1,8	8	15
03099-0408121	03099-0608121	03099-0508121	03099-0708121	8	M12x1,5	12	46,8	30	25	10,8	3,6	8	-/-/19/19	2,3	8	15
03099-040616	03099-060616	03099-050616	03099-070616	6	M16	16	60,4	40	32	14,4	4,8	10	-/-/24/24	1,8	15	35
03099-040816	03099-060816	03099-050816	03099-070816	8	M16	16	60,4	40	32	14,4	4,8	10	-/-/24/24	2,3	15	35
03099-041016	03099-061016	03099-051016	03099-071016	10	M16	16	60,4	40	32	14,4	4,8	10	-/-/24/24	2,8	15	35
03099-0406161	03099-0606161	03099-0506161	03099-0706161	6	M16x1,5	16	60,4	40	32	14,4	4,8	10	-/-/24/24	1,8	15	35
03099-0408161	03099-0608161	03099-0508161	03099-0708161	8	M16x1,5	16	60,4	40	32	14,4	4,8	10	-/-/24/24	2,3	15	35
03099-0410161	03099-0610161	03099-0510161	03099-0710161	10	M16x1,5	16	60,4	40	32	14,4	4,8	10	-/-/24/24	2,8	15	35
03099-040820	03099-060820	03099-050820	03099-070820	8	M20	20	70	50	35	18	6	12	-/-/30/30	2,3	20	60
03099-041020	03099-061020	03099-051020	03099-071020	10	M20	20	70	50	35	18	6	12	-/-/30/30	2,8	20	60
03099-041220	03099-061220	03099-051220	03099-071220	12	M20	20	70	50	35	18	6	12	-/-/30/30	3	20	60
03099-0408201	03099-0608201	03099-0508201	03099-0708201	8	M20x1,5	20	70	50	35	18	6	12	-/-/30/30	2,3	20	60
03099-0410201	03099-0610201	03099-0510201	03099-0710201	10	M20x1,5	20	70	50	35	18	6	12	-/-/30/30	2,8	20	60
03099-0412201	03099-0612201	03099-0512201	03099-0712201	12	M20x1,5	20	70	50	35	18	6	12	-/-/30/30	3	20	60

Cam action indexing plunger

with stop

Material:
Steel grade 5.8.

Version:
Black oxidised.
Pin hardened and ground.

Sample order:
nlm 03099-20-1040616

Note:
Cam-action indexing plungers are used when the indexing pin should not project all the time. Turning the handle through 180° retracts the pin.
A notch ensures that the handle remains in this position.
A stop prevents the handle being rotated through more than 180° ensuring that the pin remains retracted.
Selecting which side the stop is on defines the rotation direction of the plunger.

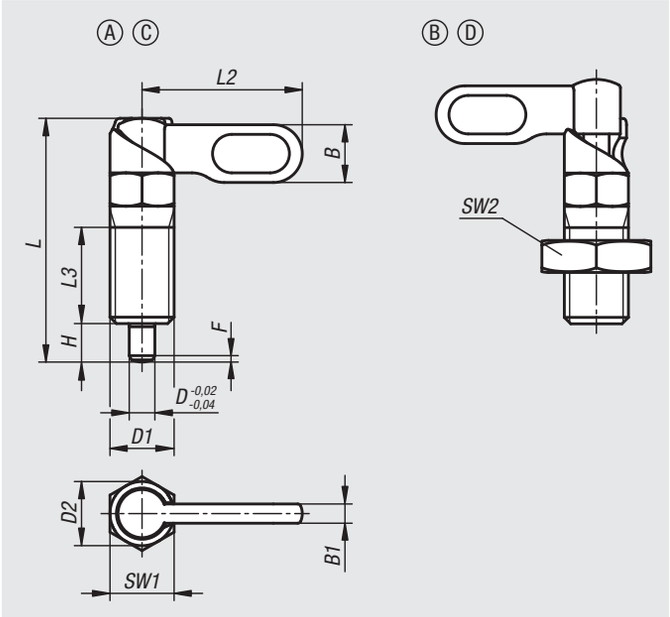

Drawing reference:
Form A: grip uncoated without nut
Form C: grip powder-coated without nut
Form B: grip uncoated with nut
Form D: grip powder-coated with nut

Order No. Form A	Order No. Form C	Type	D	D1	D2	L	L2	L3	B	B1	H	SW1	Fx30°	Spring force initial pressure F1 approx. N	Spring force final pressure F2 approx. N
03099-20-1040410	03099-20-1060410	left	4	M10	10	38	25	15	9	3	6	10	1	8	14
03099-20-1040510	03099-20-1060510	left	5	M10	10	38	25	15	9	3	6	10	1,3	8	14
03099-20-1040610	03099-20-1060610	left	6	M10	10	38	25	15	9	3	6	10	1,8	8	14
03099-20-1040512	03099-20-1060512	left	5	M12	12	47,8	30	19	10,8	3,6	8	12	1,3	8	15
03099-20-1040612	03099-20-1060612	left	6	M12	12	47,8	30	19	10,8	3,6	8	12	1,8	8	15
03099-20-1040812	03099-20-1060812	left	8	M12	12	47,8	30	19	10,8	3,6	8	12	2,3	8	15
03099-20-1040616	03099-20-1060616	left	6	M16	16	60,4	40	26	14,4	4,8	10	16	1,8	15	35
03099-20-1040816	03099-20-1060816	left	8	M16	16	60,4	40	26	14,4	4,8	10	16	2,3	15	35
03099-20-1041016	03099-20-1061016	left	10	M16	16	60,4	40	26	14,4	4,8	10	16	2,8	15	35
03099-20-10408201	03099-20-10608201	left	8	M20x1,5	20	70	50	30	18	6	12	20	2,3	20	60
03099-20-10410201	03099-20-10610201	left	10	M20x1,5	20	70	50	30	18	6	12	20	2,8	20	60
03099-20-10412201	03099-20-10612201	left	12	M20x1,5	20	70	50	30	18	6	12	20	3	20	60
03099-20-2040410	03099-20-2060410	right	4	M10	10	38	25	15	9	3	6	10	1	8	14
03099-20-2040510	03099-20-2060510	right	5	M10	10	38	25	15	9	3	6	10	1,3	8	14
03099-20-2040610	03099-20-2060610	right	6	M10	10	38	25	15	9	3	6	10	1,8	8	14
03099-20-2040512	03099-20-2060512	right	5	M12	12	47,8	30	19	10,8	3,6	8	12	1,3	8	15
03099-20-2040612	03099-20-2060612	right	6	M12	12	47,8	30	19	10,8	3,6	8	12	1,8	8	15
03099-20-2040812	03099-20-2060812	right	8	M12	12	47,8	30	19	10,8	3,6	8	12	2,3	8	15
03099-20-2040616	03099-20-2060616	right	6	M16	16	60,4	40	26	14,4	4,8	10	16	1,8	15	35
03099-20-2040816	03099-20-2060816	right	8	M16	16	60,4	40	26	14,4	4,8	10	16	2,3	15	35
03099-20-2041016	03099-20-2061016	right	10	M16	16	60,4	40	26	14,4	4,8	10	16	2,8	15	35
03099-20-20408201	03099-20-20608201	right	8	M20x1,5	20	70	50	30	18	6	12	20	2,3	20	60
03099-20-20410201	03099-20-20610201	right	10	M20x1,5	20	70	50	30	18	6	12	20	2,8	20	60
03099-20-20412201	03099-20-20612201	right	12	M20x1,5	20	70	50	30	18	6	12	20	3	20	60

Cam action indexing plunger

with stop

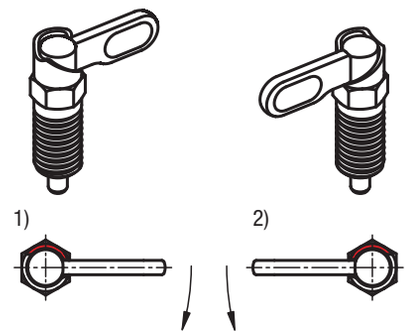

1) stop left
2) stop right

Order No. Form B	Order No. Form D	Type	D	D1	D2	L	L2	L3	B	B1	H	SW1	SW2	Fx30°	Spring force initial pressure F1 approx. N	Spring force final pressure F2 approx. N
03099-20-1050410	03099-20-1070410	left	4	M10	10	38	25	15	9	3	6	10	17	1	8	14
03099-20-1050510	03099-20-1070510	left	5	M10	10	38	25	15	9	3	6	10	17	1,3	8	14
03099-20-1050610	03099-20-1070610	left	6	M10	10	38	25	15	9	3	6	10	17	1,8	8	14
03099-20-1050512	03099-20-1070512	left	5	M12	12	47,8	30	19	10,8	3,6	8	12	19	1,3	8	15
03099-20-1050612	03099-20-1070612	left	6	M12	12	47,8	30	19	10,8	3,6	8	12	19	1,8	8	15
03099-20-1050812	03099-20-1070812	left	8	M12	12	47,8	30	19	10,8	3,6	8	12	19	2,3	8	15
03099-20-1050616	03099-20-1070616	left	6	M16	16	60,4	40	26	14,4	4,8	10	16	24	1,8	15	35
03099-20-1050816	03099-20-1070816	left	8	M16	16	60,4	40	26	14,4	4,8	10	16	24	2,3	15	35
03099-20-1051016	03099-20-1071016	left	10	M16	16	60,4	40	26	14,4	4,8	10	16	24	2,8	15	35
03099-20-10508201	03099-20-10708201	left	8	M20x1,5	20	70	50	30	18	6	12	20	30	2,3	20	60
03099-20-10510201	03099-20-10710201	left	10	M20x1,5	20	70	50	30	18	6	12	20	30	2,8	20	60
03099-20-10512201	03099-20-10712201	left	12	M20x1,5	20	70	50	30	18	6	12	20	30	3	20	60
03099-20-2050410	03099-20-2070410	right	4	M10	10	38	25	15	9	3	6	10	17	1	8	14
03099-20-2050510	03099-20-2070510	right	5	M10	10	38	25	15	9	3	6	10	17	1,3	8	14
03099-20-2050610	03099-20-2070610	right	6	M10	10	38	25	15	9	3	6	10	17	1,8	8	14
03099-20-2050512	03099-20-2070512	right	5	M12	12	47,8	30	19	10,8	3,6	8	12	19	1,3	8	15
03099-20-2050612	03099-20-2070612	right	6	M12	12	47,8	30	19	10,8	3,6	8	12	19	1,8	8	15
03099-20-2050812	03099-20-2070812	right	8	M12	12	47,8	30	19	10,8	3,6	8	12	19	2,3	8	15
03099-20-2050616	03099-20-2070616	right	6	M16	16	60,4	40	26	14,4	4,8	10	16	24	1,8	15	35
03099-20-2050816	03099-20-2070816	right	8	M16	16	60,4	40	26	14,4	4,8	10	16	24	2,3	15	35
03099-20-2051016	03099-20-2071016	right	10	M16	16	60,4	40	26	14,4	4,8	10	16	24	2,8	15	35
03099-20-20508201	03099-20-20708201	right	8	M20x1,5	20	70	50	30	18	6	12	20	30	2,3	20	60
03099-20-20510201	03099-20-20710201	right	10	M20x1,5	20	70	50	30	18	6	12	20	30	2,8	20	60
03099-20-20512201	03099-20-20712201	right	12	M20x1,5	20	70	50	30	18	6	12	20	30	3	20	60

Cam-action indexing plungers stainless steel

Material:
Stainless steel 1.4305.

Version:
Bright. Indexing pin ground, not hardened.

Sample order:
nlm 03099-1040616

Note:
Cam-action indexing plungers are used when the indexing pin should not project all the time. Turning the handle through 180° retracts the pin.
A notch ensures that the handle remains in this position.

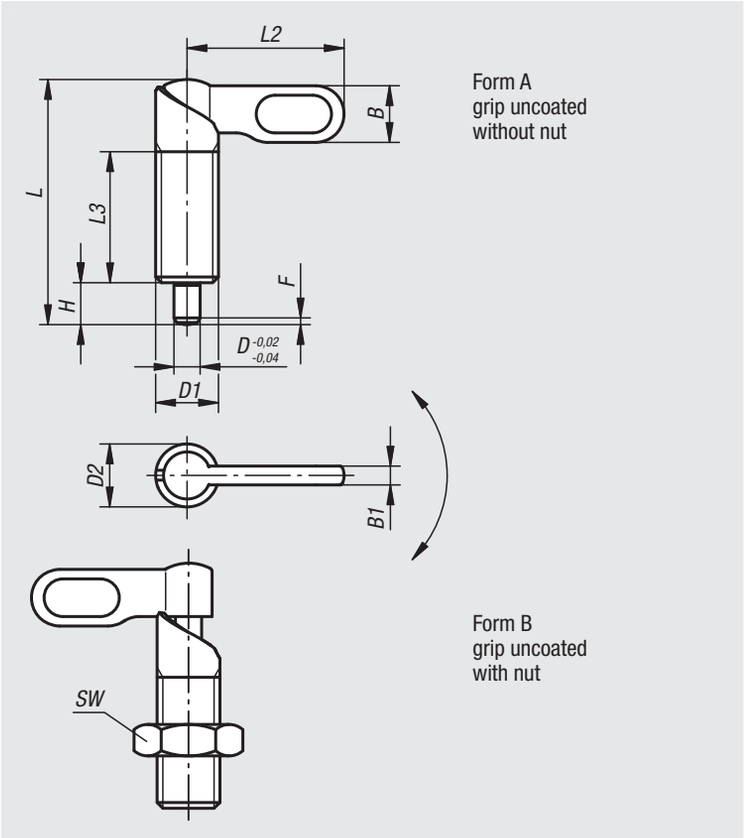

Order No. Form A	Order No. Form B	D	D1	D2	L	L2	L3	B	B1	H	SW	Fx30°	Spring force initial pressure F1 approx. N	Spring force final pressure F2 approx. N
03099-1040410	03099-1050410	4	M10	10	38	25	20	9	3	6	-/17	1	8	14
03099-1040510	03099-1050510	5	M10	10	38	25	20	9	3	6	-/17	1,3	8	14
03099-1040610	03099-1050610	6	M10	10	38	25	20	9	3	6	-/17	1,8	8	14
03099-10404101	03099-10504101	4	M10x1	10	38	25	20	9	3	6	-/17	1	8	14
03099-10405101	03099-10505101	5	M10x1	10	38	25	20	9	3	6	-/17	1,3	8	14
03099-10406101	03099-10506101	6	M10x1	10	38	25	20	9	3	6	-/17	1,8	8	14
03099-1040512	03099-1050512	5	M12	12	46,8	30	25	10,8	3,6	8	-/19	1,3	8	15
03099-1040612	03099-1050612	6	M12	12	46,8	30	25	10,8	3,6	8	-/19	1,8	8	15
03099-1040812	03099-1050812	8	M12	12	46,8	30	25	10,8	3,6	8	-/19	2,3	8	15
03099-10405121	03099-10505121	5	M12x1,5	12	46,8	30	25	10,8	3,6	8	-/19	1,3	8	15
03099-10406121	03099-10506121	6	M12x1,5	12	46,8	30	25	10,8	3,6	8	-/19	1,8	8	15
03099-10408121	03099-10508121	8	M12x1,5	12	46,8	30	25	10,8	3,6	8	-/19	2,3	8	15
03099-1040616	03099-1050616	6	M16	16	60,4	40	32	14,4	4,8	10	-/24	1,8	15	35
03099-1040816	03099-1050816	8	M16	16	60,4	40	32	14,4	4,8	10	-/24	2,3	15	35
03099-1041016	03099-1051016	10	M16	16	60,4	40	32	14,4	4,8	10	-/24	2,8	15	35
03099-10406161	03099-10506161	6	M16x1,5	16	60,4	40	32	14,4	4,8	10	-/24	1,8	15	35
03099-10408161	03099-10508161	8	M16x1,5	16	60,4	40	32	14,4	4,8	10	-/24	2,3	15	35
03099-10410161	03099-10510161	10	M16x1,5	16	60,4	40	32	14,4	4,8	10	-/24	2,8	15	35
03099-1040820	03099-1050820	8	M20	20	70	50	35	18	6	12	-/30	2,3	20	60
03099-1041020	03099-1051020	10	M20	20	70	50	35	18	6	12	-/30	2,8	20	60
03099-1041220	03099-1051220	12	M20	20	70	50	35	18	6	12	-/30	3	20	60
03099-10408201	03099-10508201	8	M20x1,5	20	70	50	35	18	6	12	-/30	2,3	20	60
03099-10410201	03099-10510201	10	M20x1,5	20	70	50	35	18	6	12	-/30	2,8	20	60
03099-10412201	03099-10512201	12	M20x1,5	20	70	50	35	18	6	12	-/30	3	20	60

Cam action indexing plunger

stainless steel, with stop

Material:
Stainless steel 1.4305.

Version:
Bright. Indexing pin ground, not hardened.

Sample order:
nlm 03099-21-1040616

Note:
Cam-action indexing plungers are used when the indexing pin should not project all the time. Turning the handle through 180° retracts the pin.
A notch ensures that the handle remains in this position.
A stop prevents the handle being rotated through more than 180° ensuring that the pin remains retracted.
Selecting which side the stop is on defines the rotation direction of the plunger.

Drawing reference:
Form A: grip uncoated without nut
Form B: grip uncoated with nut

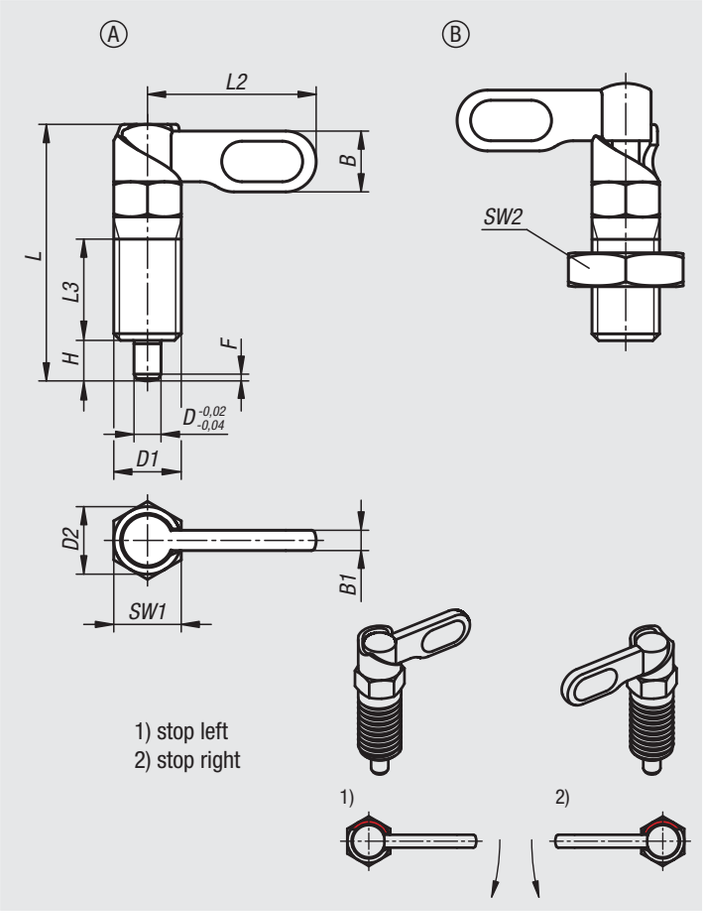

Order No. Form A	Order No. Form B	Type	D	D1	D2	L	L2	L3	B	B1	H	SW1	SW2	Fx30°	Spring force initial pressure F1 approx. N	Spring force final pressure F2 approx. N
03099-21-1040410	03099-21-1050410	left	4	M10	10	38	25	15	9	3	6	10	-/17	1	8	14
03099-21-1040510	03099-21-1050510	left	5	M10	10	38	25	15	9	3	6	10	-/17	1,3	8	14
03099-21-1040610	03099-21-1050610	left	6	M10	10	38	25	15	9	3	6	10	-/17	1,8	8	14
03099-21-1040512	03099-21-1050512	left	5	M12	12	47,8	30	19	10,8	3,6	8	12	-/19	1,3	8	15
03099-21-1040612	03099-21-1050612	left	6	M12	12	47,8	30	19	10,8	3,6	8	12	-/19	1,8	8	15
03099-21-1040812	03099-21-1050812	left	8	M12	12	47,8	30	19	10,8	3,6	8	12	-/19	2,3	8	15
03099-21-1040616	03099-21-1050616	left	6	M16	16	60,4	40	26	14,4	4,8	10	16	-/24	1,8	15	35
03099-21-1040816	03099-21-1050816	left	8	M16	16	60,4	40	26	14,4	4,8	10	16	-/24	2,3	15	35
03099-21-1041016	03099-21-1051016	left	10	M16	16	60,4	40	26	14,4	4,8	10	16	-/24	2,8	15	35
03099-21-10408201	03099-21-10508201	left	8	M20x1,5	20	70	50	30	18	6	12	20	-/30	2,3	20	60
03099-21-10410201	03099-21-10510201	left	10	M20x1,5	20	70	50	30	18	6	12	20	-/30	2,8	20	60
03099-21-10412201	03099-21-10512201	left	12	M20x1,5	20	70	50	30	18	6	12	20	-/30	3	20	60
03099-21-2040410	03099-21-2050410	right	4	M10	10	38	25	15	9	3	6	10	-/17	1	8	14
03099-21-2040510	03099-21-2050510	right	5	M10	10	38	25	15	9	3	6	10	-/17	1,3	8	14
03099-21-2040610	03099-21-2050610	right	6	M10	10	38	25	15	9	3	6	10	-/17	1,8	8	14
03099-21-2040512	03099-21-2050512	right	5	M12	12	47,8	30	19	10,8	3,6	8	12	-/19	1,3	8	15
03099-21-2040612	03099-21-2050612	right	6	M12	12	47,8	30	19	10,8	3,6	8	12	-/19	1,8	8	15
03099-21-2040812	03099-21-2050812	right	8	M12	12	47,8	30	19	10,8	3,6	8	12	-/19	2,3	8	15
03099-21-2040616	03099-21-2050616	right	6	M16	16	60,4	40	26	14,4	4,8	10	16	-/24	1,8	15	35
03099-21-2040816	03099-21-2050816	right	8	M16	16	60,4	40	26	14,4	4,8	10	16	-/24	2,3	15	35
03099-21-2041016	03099-21-2051016	right	10	M16	16	60,4	40	26	14,4	4,8	10	16	-/24	2,8	15	35
03099-21-20408201	03099-21-20508201	right	8	M20x1,5	20	70	50	30	18	6	12	20	-/30	2,3	20	60
03099-21-20410201	03099-21-20510201	right	10	M20x1,5	20	70	50	30	18	6	12	20	-/30	2,8	20	60
03099-21-20412201	03099-21-20512201	right	12	M20x1,5	20	70	50	30	18	6	12	20	-/30	3	20	60

Mounting brackets

steel

Material:
Steel.

Version:
Black oxidised.

Sample order:
nlm 03099-116

Note:
Mounting brackets are assembly aids for cam-action indexing plungers and extend their application field. They can also be used for other indexing plungers.

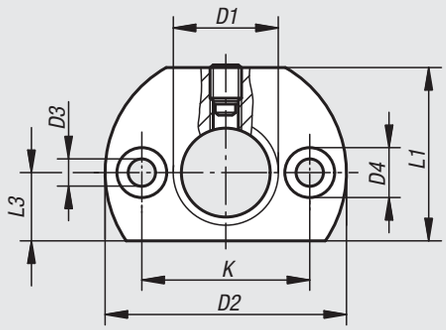

Form A
fastening holes parallel
to indexing plunger

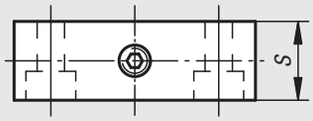

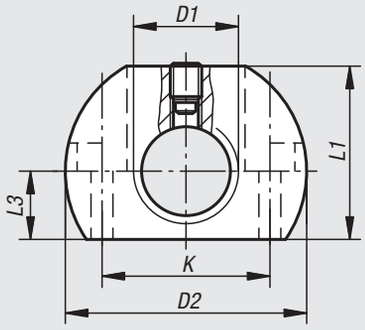

Form B
fastening holes perpendicular
to indexing plunger

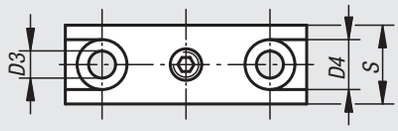

Order No.	Form	D1	D2	D3	D4	K	L1	L3	S
03099-112	A	M12	36	5,5	10	24	25	10	12
03099-1121	A	M12x1,5	36	5,5	10	24	25	10	12
03099-116	A	M16	46	5,5	10	32	33	13	15
03099-1161	A	M16x1,5	46	5,5	10	32	33	13	15
03099-120	A	M20	46	5,5	10	32	33	13	15
03099-1201	A	M20x1,5	46	5,5	10	32	33	13	15
03099-212	B	M12	36	5,5	10	24	25	10	12
03099-2121	B	M12x1,5	36	5,5	10	24	25	10	12
03099-216	B	M16	46	5,5	10	32	33	13	15
03099-2161	B	M16x1,5	46	5,5	10	32	33	13	15
03099-220	B	M20	46	5,5	10	32	33	13	15
03099-2201	B	M20x1,5	46	5,5	10	32	33	13	15

Positioning bushes for indexing plunger

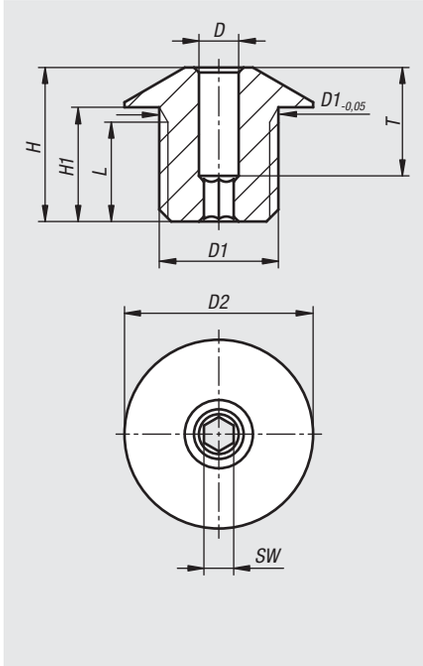

Material:
Steel.

Version:
Black oxidised, hardened and ground.

Sample order:
nlm 03099-50-04

Note:
Positioning bushes suitable for indexing plunger.
Matched with mounting brackets 03099.

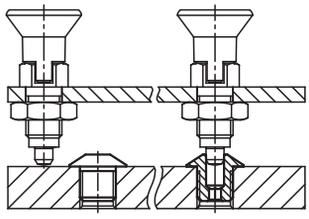

Order No.	D	D1	D2	H	H1	L	SW	T
03099-50-04	4	M12x1,5	19	15,5	11,5	10	3	11
03099-50-05	5	M12x1,5	19	15,5	11,5	10	4	10
03099-50-06	6	M12x1,5	19	15,5	11,5	10	4	10
03099-50-08	8	M16x1,5	26	19,5	14,5	13	6	12
03099-50-10	10	M16x1,5	26	19,5	14,5	13	6	12

Mounting brackets

aluminium

Material:
Aluminium 3.2163

Version:
black.

Sample order:
nlm 03099-308

Note:
Mounting brackets are an assembly aid for cam-action and other indexing plungers and expand the application field. For use with socket head screws DIN 912 / ISO 4762.

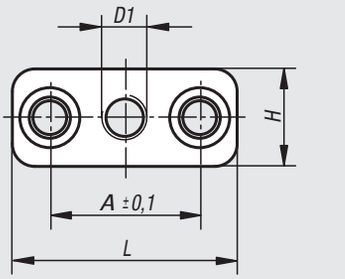

Form A
Fastening holes
parallel to thread

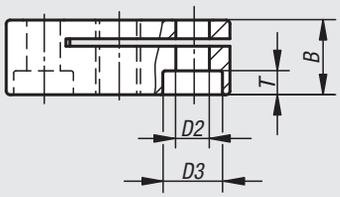

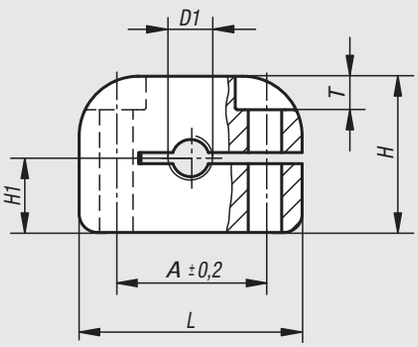

Form B
Fastening holes
perpendicular to thread

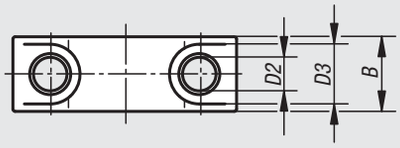

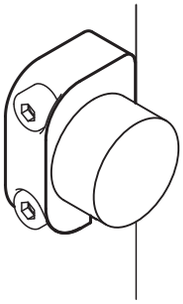

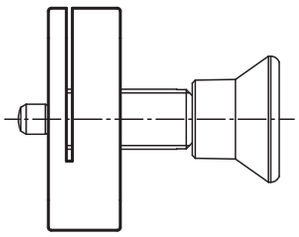

Mounting brackets

aluminium

Order No.	Form	D1	D2	D3	A	B	H	H1	L	T
03099-306	A	M6	4,5	8	20	10	13	-	30	3,2
03099-3061	A	M6x0,75	4,5	8	20	10	13	-	30	3,2
03099-308	A	M8	4,5	8	20	10	13	-	30	3,2
03099-3081	A	M8x1	4,5	8	20	10	13	-	30	3,2
03099-310	A	M10	5,5	10	24	12	18	-	37	3,9
03099-3101	A	M10x1	5,5	10	24	12	18	-	37	3,9
03099-312	A	M12	5,5	10	24	12	18	-	37	3,9
03099-3121	A	M12x1,5	5,5	10	24	12	18	-	37	3,9
03099-316	A	M16	5,5	10	32	15	25	-	46	3,9
03099-3161	A	M16x1,5	5,5	10	32	15	25	-	46	3,9
03099-320	A	M20	5,5	10	32	15	25	-	46	3,9
03099-3201	A	M20x1,5	5,5	10	32	15	25	-	46	3,9
03099-406	B	M6	4,5	8	20	10	21	10	30	4,5
03099-4061	B	M6x0,75	4,5	8	20	10	21	10	30	4,5
03099-408	B	M8	4,5	8	20	10	21	10	30	4,5
03099-4081	B	M8x1	4,5	8	20	10	21	10	30	4,5
03099-410	B	M10	5,5	10	24	12	26	13	36	5,5
03099-4101	B	M10x1	5,5	10	24	12	26	13	36	5,5
03099-412	B	M12	5,5	10	24	12	26	13	36	5,5
03099-4121	B	M12x1,5	5,5	10	24	12	26	13	36	5,5
03099-416	B	M16	5,5	10	32	15	29	17	46	5,5
03099-4161	B	M16x1,5	5,5	10	32	15	29	17	46	5,5
03099-420	B	M20	5,5	10	32	15	29	17	46	5,5
03099-4201	B	M20x1,5	5,5	10	32	15	29	17	46	5,5

Cam-action indexing plungers

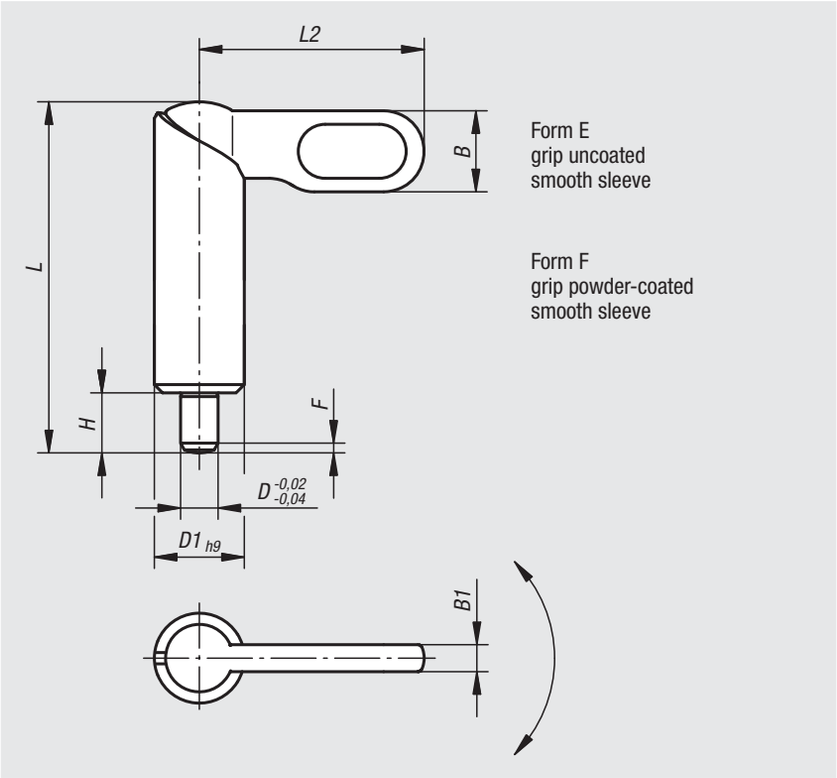

Material:
Handle 1.0503.
Pin steel grade 5.8.
Sleeve 1.0403 weldable.

Version:
Black oxidised.
Pin hardened and ground.

Sample order:
nlm 03099-091220

Note:
Cam-action indexing plungers are used when the indexing pin should not project all the time. Turning the handle through 180° retracts the pin.
A notch ensures that the handle remains in this position.
To weld the plungers we recommend inert gas shielded welding with TIG welding equipment.

Order No. Form E	Order No. Form F	D	D1	L	L2	B	B1	H	Fx30°	Spring force initial pressure F1 approx. N	Spring force final pressure F2 approx. N
03099-080410	**03099-090410**	4	10	38	25	9	3	6	1	8	14
03099-080510	**03099-090510**	5	10	38	25	9	3	6	1,3	8	14
03099-080610	**03099-090610**	6	10	38	25	9	3	6	1,8	8	14
03099-080512	**03099-090512**	5	12	46,8	30	10,8	3,6	8	1,3	8	15
03099-080612	**03099-090612**	6	12	46,8	30	10,8	3,6	8	1,8	8	15
03099-080812	**03099-090812**	8	12	46,8	30	10,8	3,6	8	2,3	8	15
03099-080616	**03099-090616**	6	16	60,4	40	14,4	4,8	10	1,8	15	35
03099-080816	**03099-090816**	8	16	60,4	40	14,4	4,8	10	2,3	15	35
03099-081016	**03099-091016**	10	16	60,4	40	14,4	4,8	10	2,8	15	35
03099-080820	**03099-090820**	8	20	70	50	18	6	12	2,3	20	60
03099-081020	**03099-091020**	10	20	70	50	18	6	12	2,8	20	60
03099-081220	**03099-091220**	12	20	70	50	18	6	12	3	20	60

Cam-action indexing plungers stainless steel

Material:
Handle stainless steel 1.4308.
Indexing pin stainless steel 1.4305.
Sleeve weldable stainless steel 1.4301.

Version:
Bright. Indexing pin ground, not hardened.

Sample order:
nlm 03099-1081220

Note:
Cam-action indexing plungers are used when the indexing pin should not project all the time. Turning the handle through 180° retracts the pin.
A notch ensures that the handle remains in this position.
To weld the plungers we recommend inert gas shielded welding with TIG welding equipment.

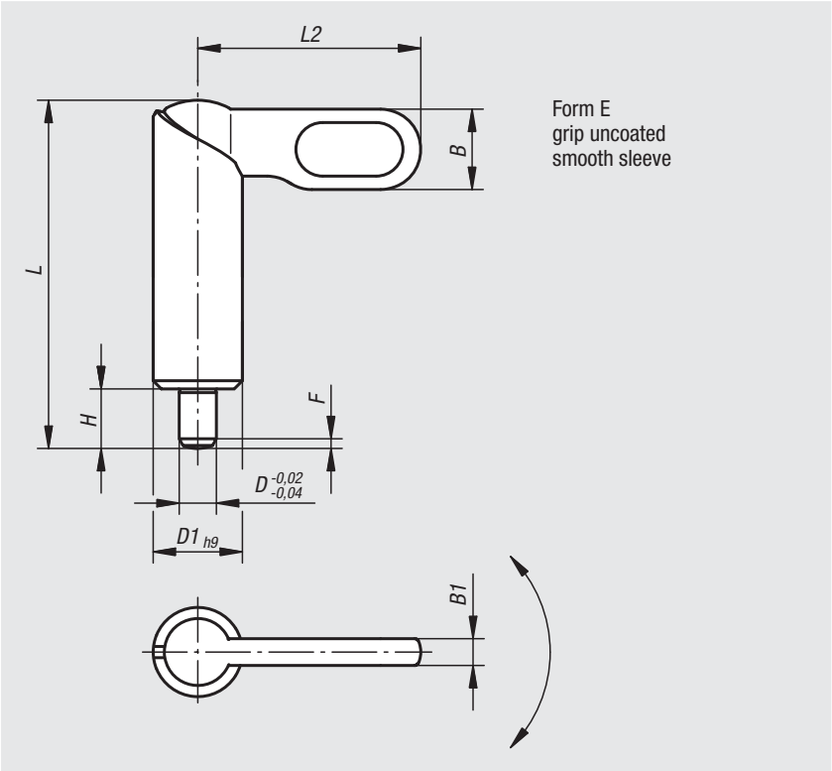

Order No.	Form	D	D1	L	L2	B	B1	H	Fx30°	Spring force initial pressure F1 approx. N	Spring force final pressure F2 approx. N
03099-1080410	E	4	10	38	25	9	3	6	1	8	14
03099-1080510	E	5	10	38	25	9	3	6	1,3	8	14
03099-1080610	E	6	10	38	25	9	3	6	1,8	8	14
03099-1080512	E	5	12	46,8	30	10,8	3,6	8	1,3	8	15
03099-1080612	E	6	12	46,8	30	10,8	3,6	8	1,8	8	15
03099-1080812	E	8	12	46,8	30	10,8	3,6	8	2,3	8	15
03099-1080616	E	6	16	60,4	40	14,4	4,8	10	1,8	15	35
03099-1080816	E	8	16	60,4	40	14,4	4,8	10	2,3	15	35
03099-1081016	E	10	16	60,4	40	14,4	4,8	10	2,8	15	35
03099-1080820	E	8	20	70	50	18	6	12	2,3	20	60
03099-1081020	E	10	20	70	50	18	6	12	2,8	20	60
03099-1081220	E	12	20	70	50	18	6	12	3	20	60

Barrel slide bolts

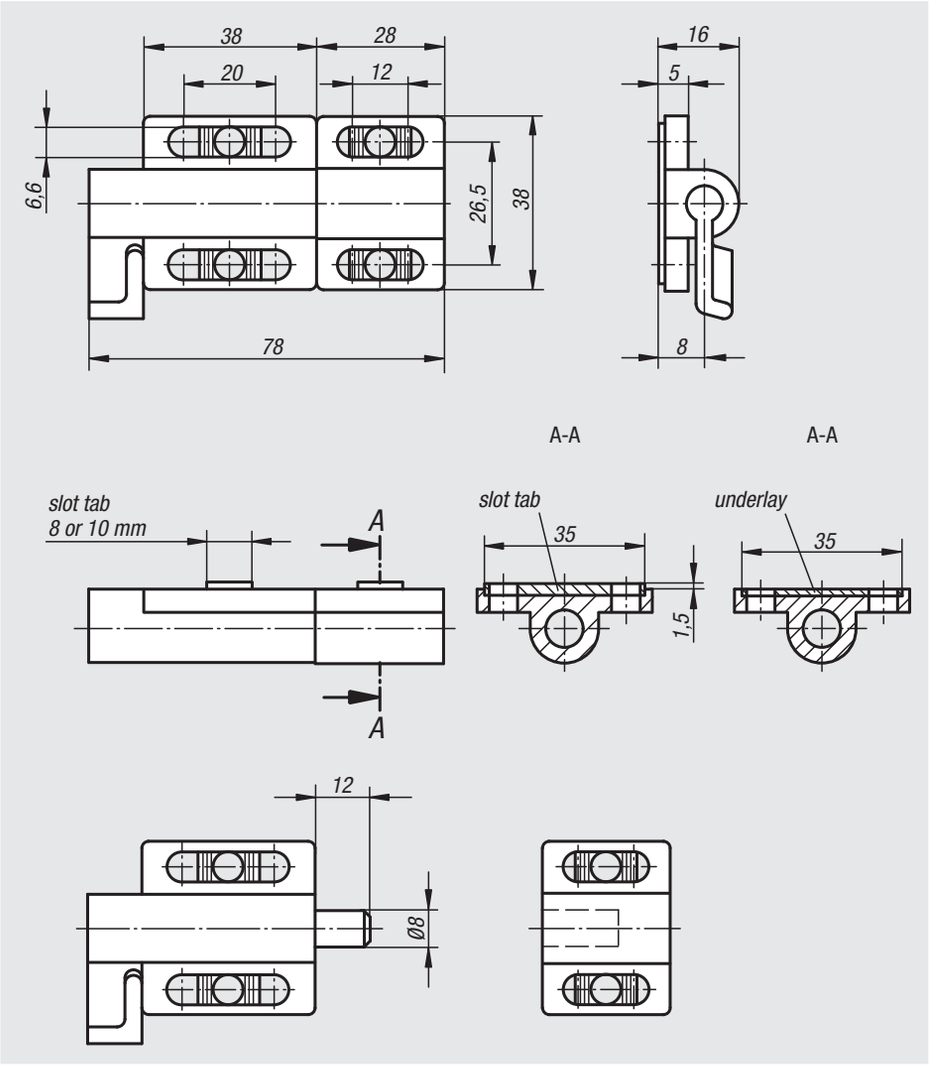

Material:
Housing die-cast zinc.
Grip, underlay and slot tabs thermoplastic PA.
Bolt stainless steel.

Version:
Housing painted silver.
Grip, underlay and slot tabs black.
Bolt bright.

Sample order:
nlm 03102-38038028

Note:
Spring loaded bolt.
Supplied with:
- 2 underlays for mounting on level surfaces.
- 2 of each tabs for mounting on profiles with 8 or 10 mm slots.

Order No.	Spring force initial pressure F1 approx. N	Spring force final pressure F2 approx. N
03102-38038028	5	15

03105

Locating pins removable

Form A and C

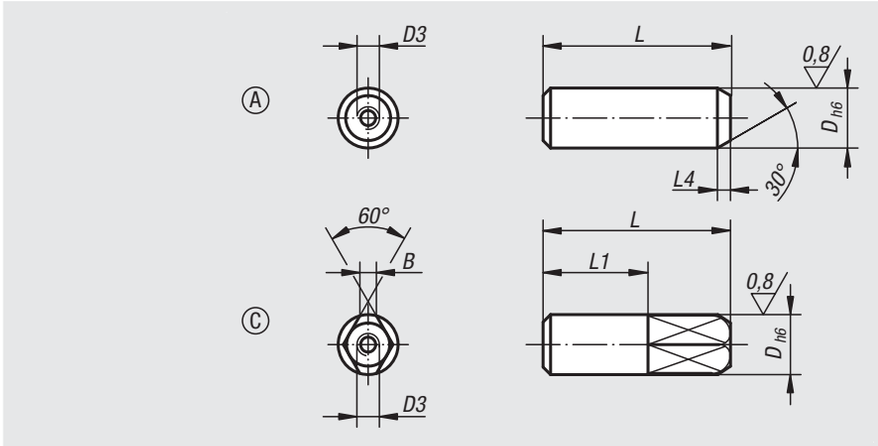

Material:
Tool steel.

Version:
Hardened and ground (HRC 56 +2).

Sample order:
nlm 03105-12

Note:
The locating pins can be easily removed with an extractor.

Order No. Form A	Order No. Form C	D	D3	L	L1	L4	B
03105-08	**03105-082**	8	M3	25	-/14	3/-	-/2,2
03105-10	**03105-102**	10	M3	30	-/17	3/-	-/3
03105-12	**03105-122**	12	M5	34	-/20	4/-	-/3,5
03105-16	**03105-162**	16	M5	42	-/26	4/-	-/5
03105-20	**03105-202**	20	M5	47	-/30	5/-	-/6
03105-25	**03105-252**	25	M5	49	-/30	5/-	-/8

03106

Locating pins removable

Form B and D

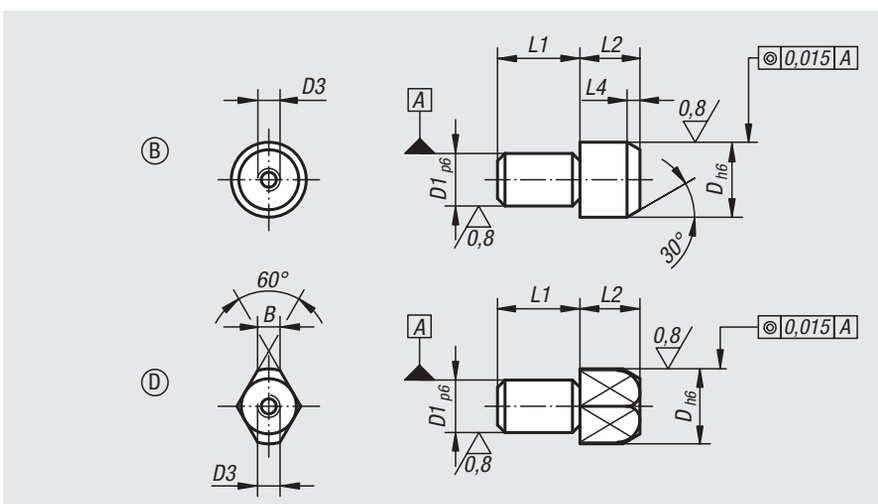

Material:
Tool steel.

Version:
Hardened and ground (HRC 55-60).

Sample order:
nlm 03106-20

Note:
Locating pins can be easily removed with an extractor.

Order No. Form B	Order No. Form D	D	D1	D3	L1	L2	L4	B
03106-10	**03106-102**	10	7	M3	11	11	3	-/3
03106-12	**03106-122**	12	8	M5	13	12	4	-/3,5
03106-16	**03106-162**	16	12	M5	18	14	4,5	-/5
03106-20	**03106-202**	20	14	M5	22	15	5	-/6
03106-22	**03106-222**	22	16	M5	22	17	5	-/7
03106-25	**03106-252**	25	18	M5	25	17	5	-/8

Locating pins

with ball-end Form A

Material:
Tool steel or stainless steel 1.4305.

Version:
Steel hardened and ground.
Stainless steel ground and kolsterised.

Sample order:
nlm 03107-12

Note:
Ball end locating pins are specially designed to ease the locating process. The tendency to jam, caused by the locating hole not being at right angles to the pin or by the pushing force not being parallel to the pin axis, is minimized by the ball-end form. (See the illustration 1 for 03108 Form B)

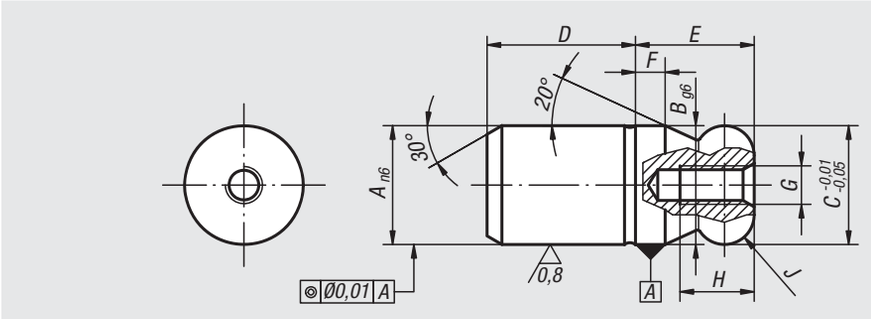

Order No. Tool steel	Order No. Stainless steel	A	B	C	D	E	F	G	H	J
03107-05	03107-505	5	5	5	6	5	2	M2,5	4,5	R 1
03107-06	03107-506	6	6	6	8	6	2	M3	5	R 1
03107-08	03107-508	8	8	8	10	8	2	M3	6	R 2
03107-10	03107-510	10	10	10	13	10	2,5	M3	6	R 2,5
03107-12	03107-512	12	12	12	15	12	3	M4	8	R 3
03107-14	03107-514	14	14	14	17	14	3,5	M4	8	R 3,5
03107-16	03107-516	16	16	16	20	16	4	M5	10	R 4
03107-20	03107-520	20	20	20	25	20	5	M5	10	R 5
03107-25	-	25	25	25	25	25	6	M5	10	R 6
03107-30	-	30	30	30	30	30	8	M6	12	R 8
03107-40	-	40	40	40	40	40	10	M6	12	R 10
03107-50	-	50	50	50	50	50	12	M6	12	R 12

03107

Locating pins

with flattened ball-end Form C

Material:
Tool steel or stainless steel 1.4305.

Version:
Steel hardened and ground.
Stainless steel ground and kolsterised.

Sample order:
nlm 03107-162

Note:
Ball end locating pins are specially designed to ease the locating process. The tendency to jam, caused by the locating hole not being at right angles to the pin or by the pushing force not being parallel to the pin axis, is minimized by the ball-end form. (See the illustration 1 for 03108 Form B)

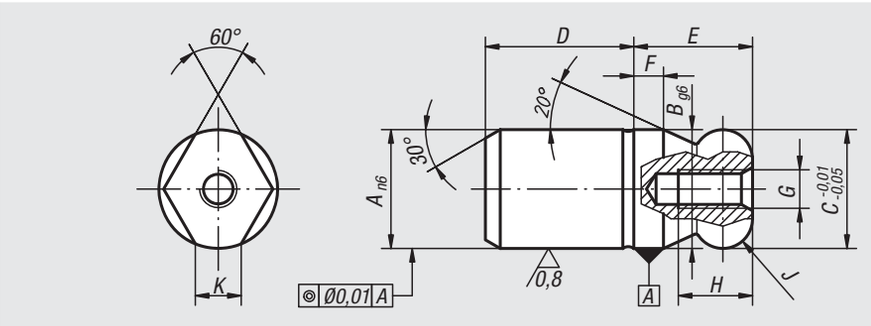

Order No. Tool steel	Order No. Stainless steel	A	B	C	D	E	F	G	H	J	K
03107-052	03107-5052	5	5	5	6	5	2	M2,5	4,5	R 1	1,5
03107-062	03107-5062	6	6	6	8	6	2	M3	5	R 1	1,8
03107-082	03107-5082	8	8	8	10	8	2	M3	6	R 2	1,9
03107-102	03107-5102	10	10	10	13	10	2,5	M3	6	R 2,5	2,5
03107-122	03107-5122	12	12	12	15	12	3	M4	8	R 3	2,5
03107-142	03107-5142	14	14	14	17	14	3,5	M4	8	R 3,5	3,9
03107-162	03107-5162	16	16	16	20	16	4	M5	10	R 4	4,3
03107-202	03107-5202	20	20	20	25	20	5	M5	10	R 5	5
03107-252	-	25	25	25	25	25	6	M5	10	R 6	5,6
03107-302	-	30	30	30	30	30	8	M6	12	R 8	8,8
03107-402	-	40	40	40	40	40	10	M6	12	R 10	12,8
03107-502	-	50	50	50	50	50	12	M6	12	R 12	16,7

Locating pins

with ball-end Form B

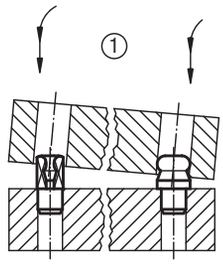

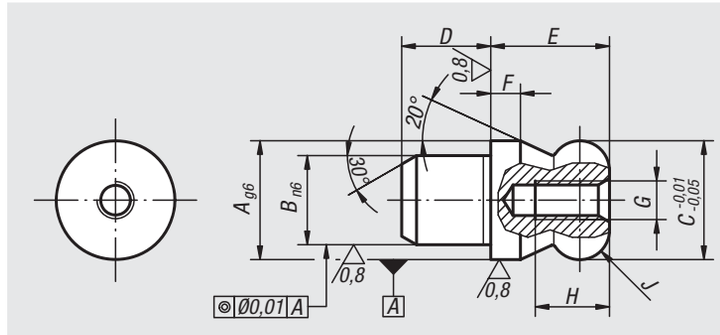

Material:
Tool steel or stainless steel 1.4305.

Version:
Steel hardened and ground.
Stainless steel ground and kolsterised.

Sample order:
nlm 03108-20

Note:
Ball end locating pins are specially designed to ease the locating process. The tendency to jam, caused by the locating hole not being at right angles to the pin or by the pushing force not being parallel to the pin axis, is minimized by the ball-end form (see illustration 1).

Order No. Tool steel	Order No. Stainless steel	A	B	C	D	E	F	G	H	J
03108-06	03108-506	6	4	6	4	6	2	M2,5	4,5	R 1
03108-08	03108-508	8	6	8	6	8	2	M3	6	R 2
03108-10	03108-510	10	7	10	7	10	2,5	M3	6	R 2,5
03108-12	03108-512	12	8	12	8	12	3	M4	8	R 3
03108-14	03108-514	14	10	14	10	14	3,5	M4	8	R 3,5
03108-16	03108-516	16	12	16	12	16	4	M5	10	R 4
03108-20	03108-520	20	14	20	14	20	5	M5	10	R 5
03108-22	-	22	16	22	16	22	5,5	M5	10	R 5,5
03108-25	-	25	18	25	18	25	6	M5	10	R 6

03108

Locating pins

with flattened ball-end Form D

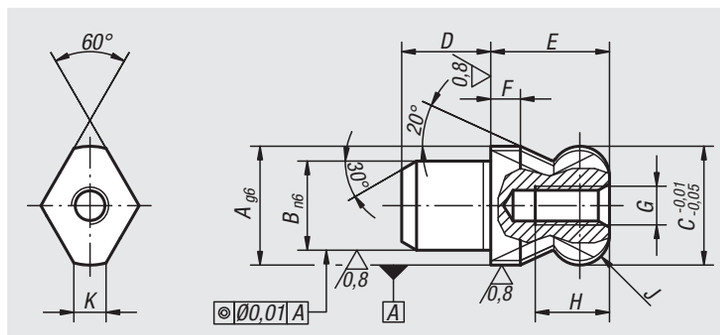

Material:
Tool steel or stainless steel 1.4305.

Version:
Steel hardened and ground.
Stainless steel ground and kolsterised.

Sample order:
nlm 03108-162

Note:
Ball end locating pins are specially designed to ease the locating process. The tendency to jam, caused by the locating hole not being at right angles to the pin or by the pushing force not being parallel to the pin axis, is minimized by the ball-end form. (See the illustration 1 for 03108 Form B)

Order No. Tool steel	Order No. Stainless steel	A	B	C	D	E	F	G	H	J	K
03108-062	03108-5062	6	4	6	4	6	2	M2,5	4,5	R 1	1,7
03108-082	03108-5082	8	6	8	6	8	2	M3	6	R 2	2
03108-102	03108-5102	10	7	10	7	10	2,5	M3	6	R 2,5	2,5
03108-122	03108-5122	12	8	12	8	12	3	M4	8	R 3	2,5
03108-142	03108-5142	14	10	14	10	14	3,5	M4	8	R 3,5	3,76
03108-162	03108-5162	16	12	16	12	16	4	M5	10	R 4	4,3
03108-202	03108-5202	20	14	20	14	20	5	M5	10	R 5	5
03108-222	-	22	16	22	16	22	5,5	M5	10	R 5,5	5
03108-252	-	25	18	25	18	25	6	M5	10	R 6	5,6

03110

Centring pins

for central hole

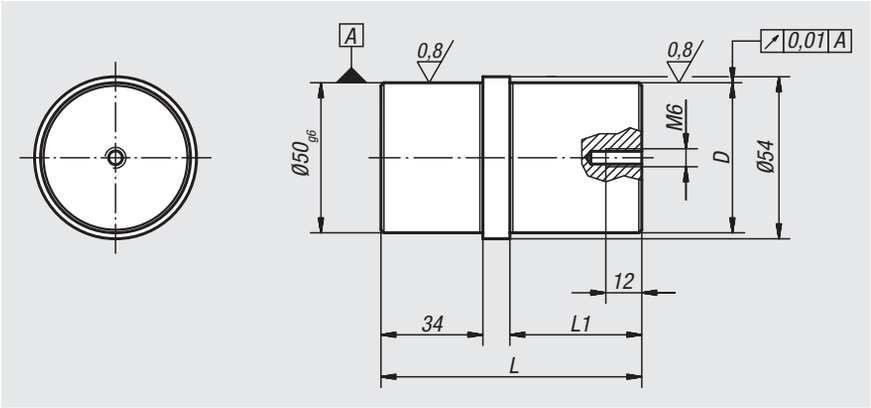

Material:
Steel.

Version:
Case-hardened.
Toleranced diameter ground.

Sample order:
nlm 03110-5025

Note:
These centring pins are suitable for the central holes of our workholding elements 01148, 01263, 01265, 01267 and 01850.

Order No.	D	L	L1
03110-5025	25 g6	77	34
03110-5030	30 h6	87	44
03110-5050	50 g6	87	44

03112

Centring pins

for aligning hole

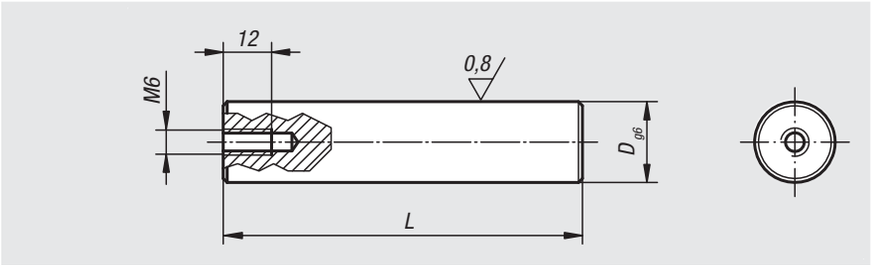

Material:
Steel.

Version:
Case-hardened.
Toleranced diameter ground.

Sample order:
nlm 03112-25125

Note:
These centring pins are suitable for the aligning holes of our workholding elements 01263, 01265 and 01850.

Order No.	D	L
03112-20075	20	75
03112-20089	20	89
03112-25125	25	125

Centring pins

for aligning hole

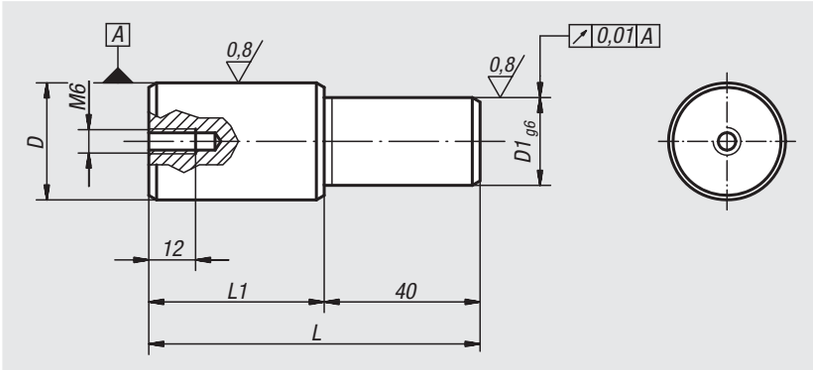

Material:
Steel.

Version:
Case-hardened.
Toleranced diameter ground.

Sample order:
nlm 03114-2520

Note:
These centring pins are suitable for our subplates 01148.

Order No.	D	D1	L	L1
03114-2520	25 g6	20	75	35
03114-3020	30 h6	20	85	45
03114-3025	30 h6	25	85	45

03120

Positioning pins cylindrical

ground

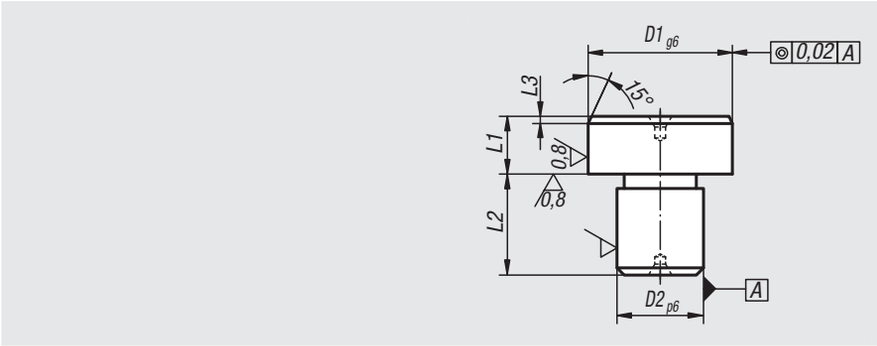

Material:
Tool steel.

Version:
Hardened and ground.

Sample order:
nlm 03120-08

Note:
Top face with centre hole.

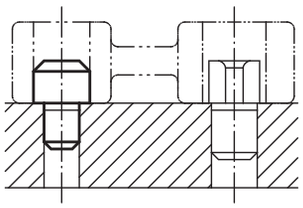

Order No.	D1	D2	L1	L2	L3
03120-05	8	5	8	8	2
03120-07	10	7	8	8	2
03120-08	12	8	8	10	2
03120-081	14	8	8	10	3
03120-09	16	9	8	12	3
03120-12	18	12	8	12	3
03120-121	20	12	8	14	3
03120-14	22	14	8	14	3
03120-16	25	16	8	16	3

03130

Positioning pins cylindrical

not ground

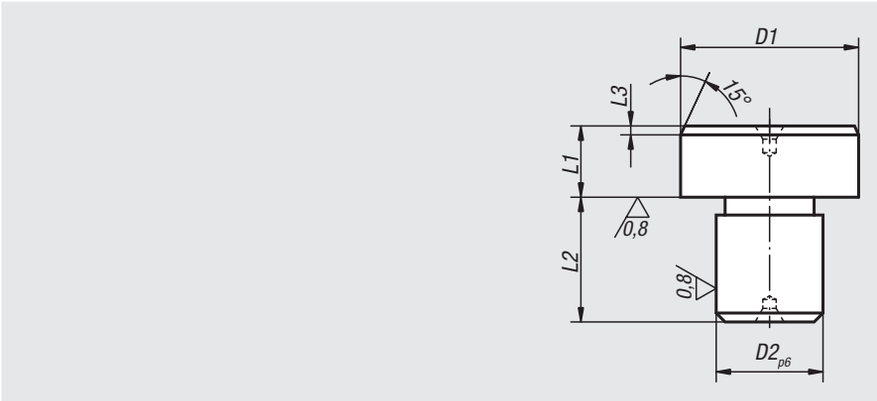

Material:
Tool steel.

Version:
Hardened.

Sample order:
nlm 03130-05

Note:
Top face with centre hole.

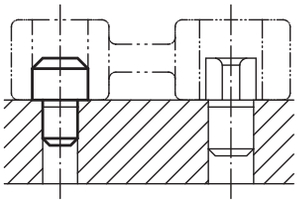

Order No.	D1	D2	L1	L2	L3
03130-05	8,5	5	8	8	2
03130-07	10,5	7	8	8	2
03130-08	12,5	8	8	10	2
03130-081	14,5	8	8	10	3
03130-09	16,5	9	8	12	3
03130-12	18,5	12	8	12	3
03130-121	20,5	12	8	14	3
03130-14	22,5	14	8	14	3
03130-16	25,5	16	8	16	3

Positioning pins free-milled

ground

Material:
Tool steel.

Version:
Hardened and ground.

Sample order:
nlm 03140-08

Note:
Top face with centre hole.

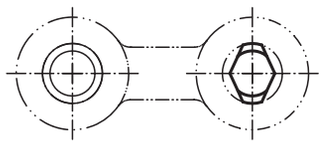

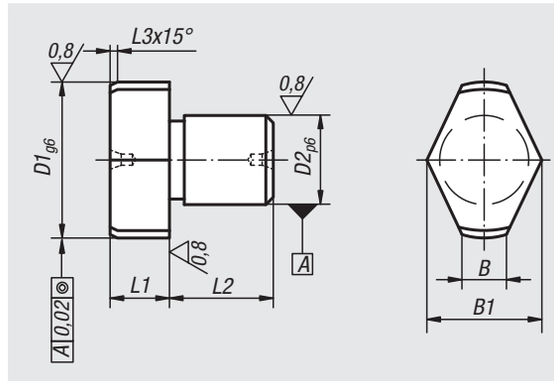

Order No.	D1	D2	L1	L2	L3	B	B1
03140-05	8	5	8	8	2	2	6,6
03140-07	10	7	8	8	2	3,0	8,6
03140-08	12	8	8	10	2	3,0	9,8
03140-081	14	8	8	10	3	3,5	11,2
03140-09	16	9	8	12	3	4	13,2
03140-12	18	12	8	12	3	4,5	14,7
03140-121	20	12	8	14	3	5	16,6
03140-14	22	14	8	14	3	5,6	18
03140-16	25	16	8	16	3	6	19,8

Positioning pins free-milled

not ground

Material:
Tool steel.

Version:
Hardened.

Sample order:
nlm 03150-05

Note:
Top face with centre hole.

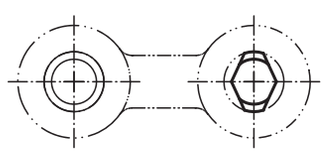

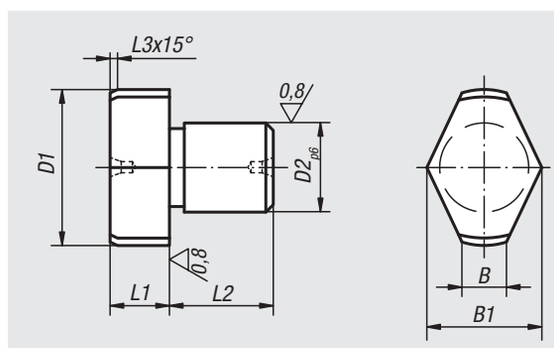

Order No.	D1	D2	L1	L2	L3	B	B1
03150-05	8,5	5	8	8	2	2	6,6
03150-07	10,5	7	8	8	2	3,0	8,6
03150-08	12,5	8	8	10	2	3,0	9,8
03150-081	14,5	8	8	10	3	3,5	11,2
03150-09	16,5	9	8	12	3	4	13,2
03150-12	18,5	12	8	12	3	4,5	14,7
03150-121	20,5	12	8	14	3	5	16,6
03150-14	22,5	14	8	14	3	5,6	18
03150-16	25,5	16	8	16	3	6	19,8

Locating pins expanding

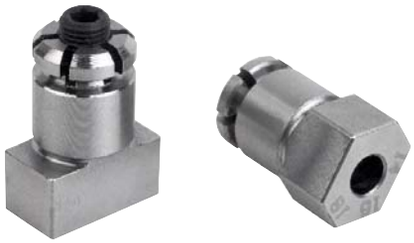

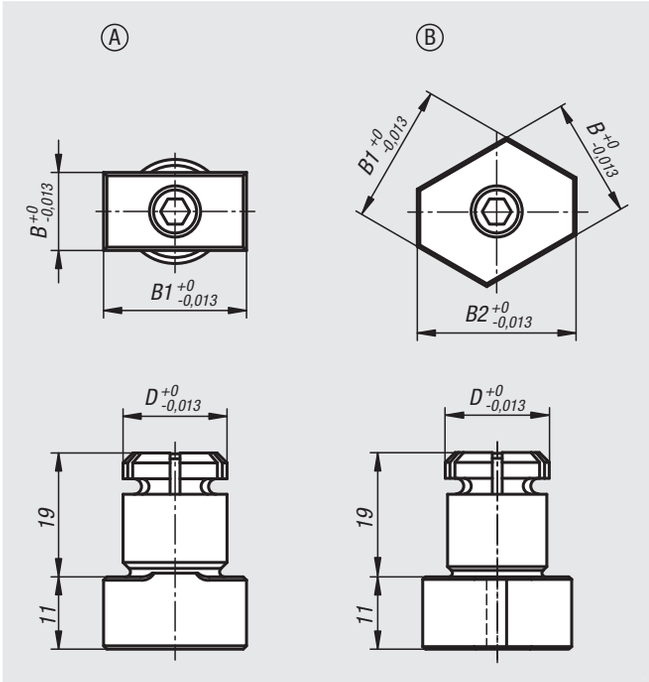

Material:
Carbon steel.

Version:
Tempered and black oxidised.
Locating diameter and guide faces ground.

Sample order:
nlm 03151-1610

Note:
These expanding locating pins enable e.g. tooling plates to be positioned in the T-slots of machine tables (see illustration).
The plates to be positioned must have two holes matching the expanding pin diameter.
The expansion screw has a broached through hexagonal hole allowing the pin to be tightened or loosened from two sides.

Drawing reference:
1) tooling plate
2) clamp straps
3) machine table
4) expanding locating pin

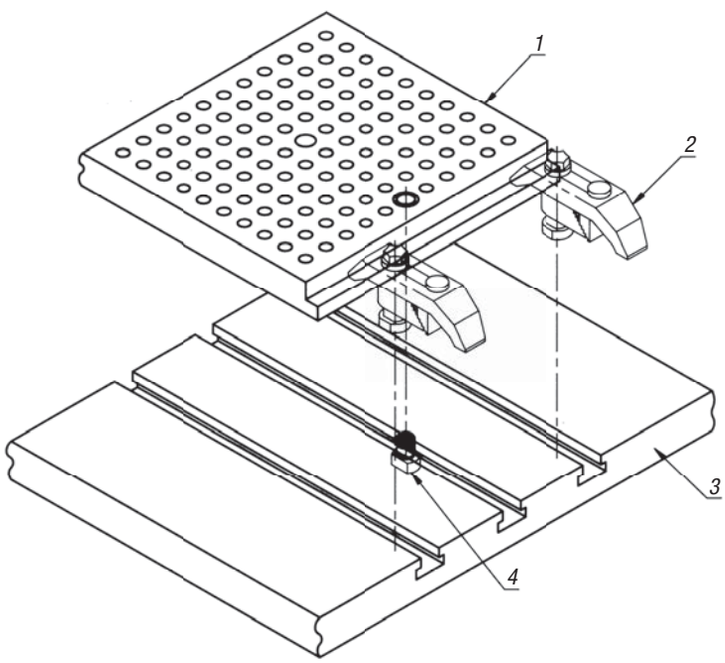

Order No.	Form	D	B	B1	B2	Recommended Ø
03151-1610	A	16	10	20	-	16,01 ±0,01
03151-1612	A	16	12	22	-	16,01 ±0,01
03151-1614	B	16	14	16	18	16,01 ±0,01
03151-2024	B	20	24	28	32	20,01 ±0,01

Locating and clamping system, mechanical

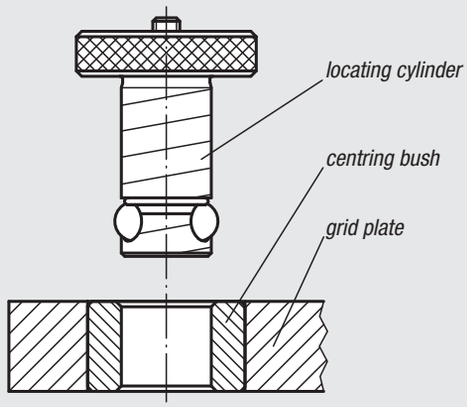

recommanded installation

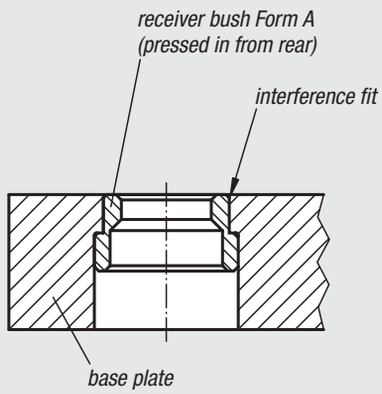

alternative installation

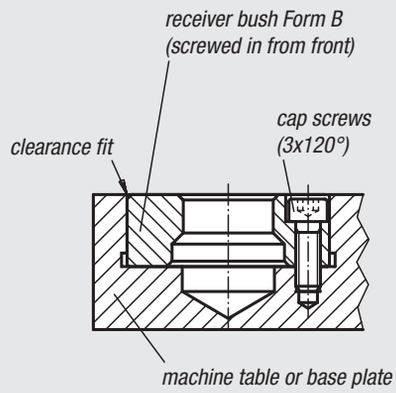

General information

1. With the mechanical locating and clamping system, base and tooling plates can be precisely positioned and fastening in a couple of seconds. The system consists of a locating cylinder, a centring bush and a receiver bush.

2. Three easy steps to applying the positioning and clamping system: Mount two receiver bushes on the machine table or on the base plate, and two centring bushes on the clamping plate. Insert the locating cylinder through the centring bush into the receiver bush to attain precise positioning. Turn the set screws in each locating cylinder roughly two rotations to clamp tight. Eighteen different locating cylinders, two centring bush types and two receiver bush models are available.

3. A centring bush grade I (below left) and a centring bush grade I or II (above right) should be installed in each fastening plate as far apart from one another as possible. More than two positioning points bring no further advantages.

   When more than two locating cylinders are used for additional holding force (dependent on application), holes in the fastening plate must be 0.4 mm to 0.8 mm bigger than the selected locating cylinder diameter.

4. If the centre distance between the two positioning holes in the e.g. machine table and the clamping plate is kept within a tolerance of ±0.005 mm and two centring bushings grade I are used, a repeat accuracy within ±0.013 mm can be achieved.

   For a somewhat lower repeat accuracy within ±0.04 mm, one centring bushing grade I and one centring bushing grade II with a centre distance tolerance of ±0.03 mm are used.

5. The difference between the centring bush grade I and the centring bush grade II is that the centring bush grade II has a larger internal diameter in order to correspond to the greater centre distance tolerance in the machine table or the base plate.

Locating cylinder Ball Lock

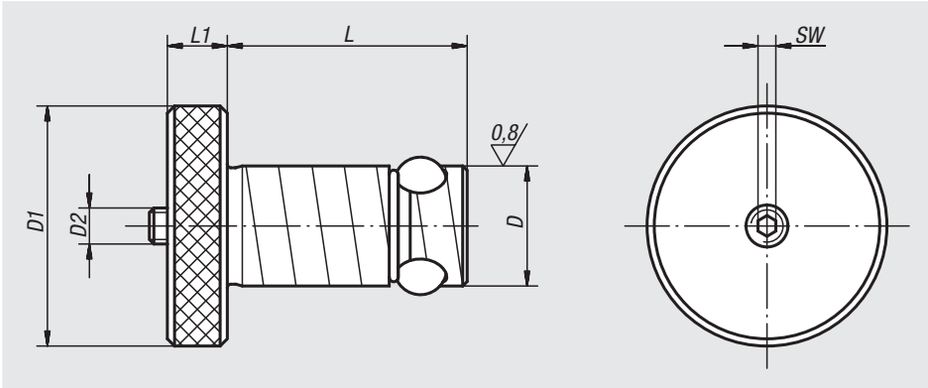

Material:
Locating cylinder carbon steel.
Balls roller bearing steel.

Version:
Locating cylinder tempered, black oxidised.
Balls hardened, bright.

Sample order:
nlm 03153-16020

Note:
By tightening the thrust screw (D2) the centre ball is pressed downwards and in turn forces the three locking balls outwards, where they locked in the receiver bush.
With this easy to use system machine set-up times are up to twelve times shorter than when conventional methods are used.

Order No.	Grid plate thickness ±0,05	D	D1	D2	L	L1	SW	Holding force F kN	Tightening torque max. Nm	Order No. Repair Kit
03153-13013	13	13	22	M5	27,6	6	2,5	3,3	1	03153-913013
03153-13020	20	13	22	M5	34,6	6	2,5	3,3	1	03153-913020
03153-16020	20	16	32	M6	36,5	8	3	5,3	3	03153-916020
03153-16025	25	16	32	M6	41,5	8	3	5,3	3	03153-916025
03153-20020	20	20	40	M6	39,5	10	3	13,3	4	03153-920020
03153-20025	25	20	40	M6	44,5	10	3	13,3	4	03153-920025
03153-25020	20	25	45	M8	44	10	4	30	9	03153-925020
03153-25025	25	25	45	M8	49	10	4	30	9	03153-925025
03153-30020	20	30	50	M10	49	13	5	44	15	03153-930020
03153-30025	25	30	50	M10	54	13	5	44	15	03153-930025
03153-35020	20	35	60	M12	51	13	6	68	25	03153-935020
03153-35025	25	35	60	M12	56	13	6	68	25	03153-935025
03153-35040	40	35	60	M12	71	13	6	68	25	03153-935040
03153-35050	50	35	60	M12	81	13	6	68	25	03153-935050
03153-50020	20	50	75	M20	64	20	10	88	50	03153-950020
03153-50025	25	50	75	M20	69	20	10	88	50	03153-950025
03153-50040	40	50	75	M20	84	20	10	88	50	03153-950040
03153-50050	50	50	75	M20	94	20	10	88	50	03153-950050

Locating cylinders

with quick clamping system

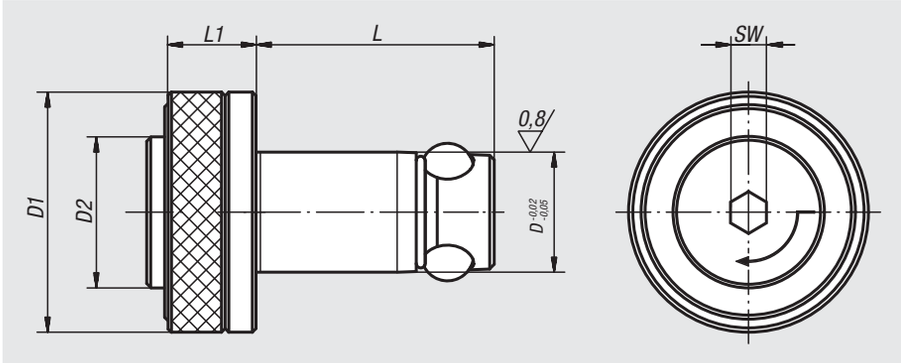

Material:
Locating cylinder carbon steel.
Balls roller bearing steel.

Version:
Locating cylinder tempered, black oxidised.
Balls hardened, bright.

Sample order:
nlm 03153-113013

Note:
Locating cylinder with quick-clamp system for extra timesaving during setups.

Insert the locating cylinder into the receiving hole and press the button. The three balls are pushed out and position the components. By tightening the set screw a 1/4 turn using an hexagonal key, the components are positively and securely held.

Order No.	Grid plate thickness ±0,05	D	D1	D2	L	L1	SW	Holding force F kN	Tightening torque max. Nm
03153-113013	13	13	25	16	27,6	12	4	4	1
03153-113020	20	13	25	16	34,6	12	4	4	1
03153-116020	20	16	32	20	36,5	15	6	8	2
03153-116025	25	16	32	20	41,5	15	6	8	2
03153-120020	20	20	40	25	39,5	15	6	8	2
03153-120025	25	20	40	25	44,5	15	6	8	2

Centring bushes

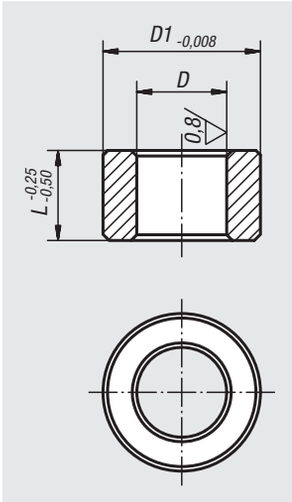

Material:
Ball bearing steel

Version:
Hardened, black oxidised.

Sample order:
nlm 03154-113020

Note:
By a centre distance tolerance of ±0.005 mm and two grade I centring bushes a repeat accuracy of ±0.013 mm is possible.
By a centre distance tolerance of ±0.03 mm and one grade I centring bush and one grade II centring bush repeat accuracy of ±0.04 mm is possible.
The centring bush is pressed with light pressure into the receiver holes in tooling plates.
For further details see “General information”.

* Tol. for grade I centring bushes +0.005 / +0.018
Tol. for grade II centring bushes +0.025 / +0.050

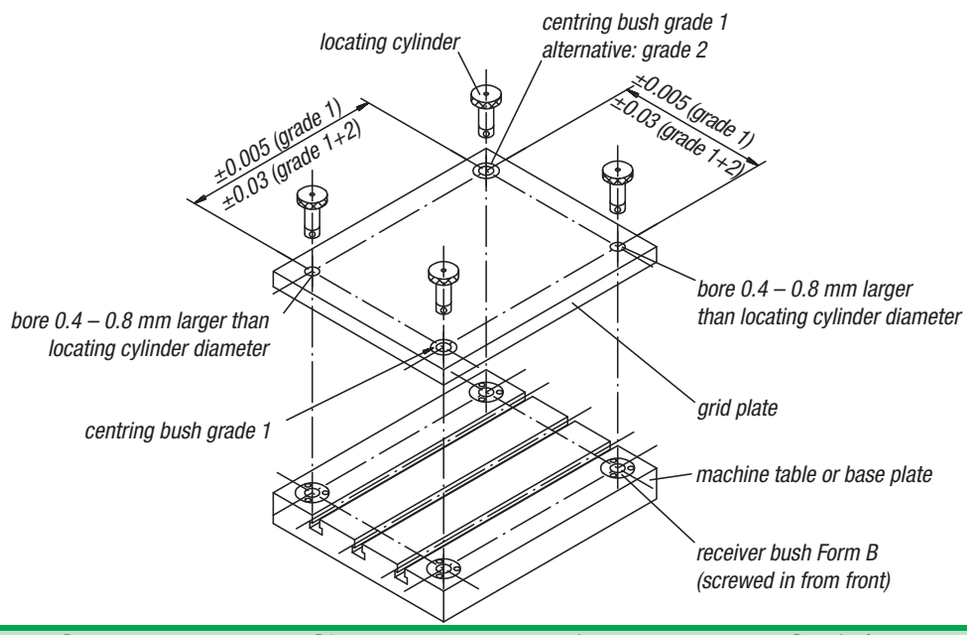

Order No. grade I	Order No. grade II	D	D1	L	Bore size for centring bush Ø +0.01
03154-113013	**03154-213013**	13*	19,04	13	19,016
03154-113020	**03154-213020**	13*	19,04	20	19,016
03154-116020	**03154-216020**	16*	25,042	20	25,016
03154-116025	**03154-216025**	16*	25,042	25	25,016
03154-120020	**03154-220020**	20*	35,042	20	35,018
03154-120025	**03154-220025**	20*	35,042	25	35,018
03154-125020	**03154-225020**	25*	35,042	20	35,018
03154-125025	**03154-225025**	25*	35,042	25	35,018
03154-130020	**03154-230020**	30*	45,042	20	45,018
03154-130025	**-**	30*	45,042	25	45,018
03154-135020	**-**	35*	45,042	20	45,018
03154-135025	**03154-235025**	35*	45,042	25	45,018
03154-135040	**03154-235040**	35*	45,042	40	45,018
03154-135050	**03154-235050**	35*	45,042	50	45,018
03154-150020	**-**	50*	63,546	20	63,521
03154-150040	**03154-250040**	50*	63,546	40	63,521
03154-150050	**03154-250050**	50*	63,546	50	63,521
-	**03154-250025**	50*	63,546	25	63,521

03155

Receiver bushes

Form A (pressed in from rear)

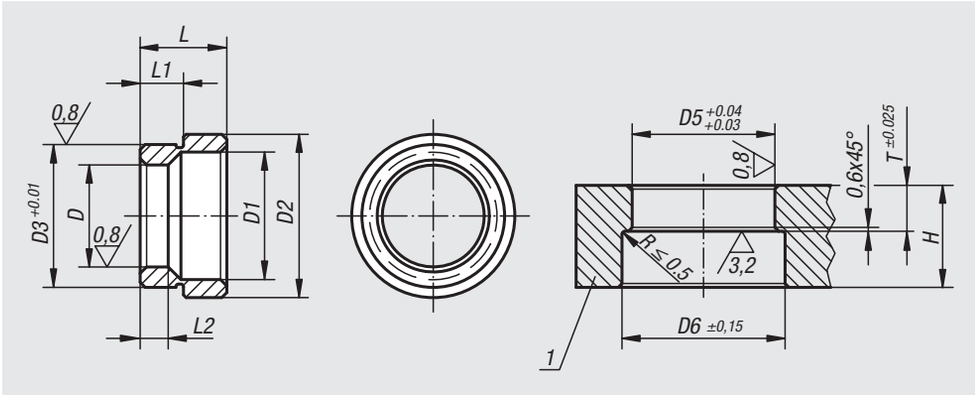

Material:
Carbon steel.

Version:
Tempered and black oxidised.

Sample order:
nlm 03155-20

Drawing reference:
1) grid plate

Order No.	D	D1	D2	D3	L	L1	L2	D5	D6	T	Min. grid plate thickness H
03155-13	13	17,3	25	20,03	12,1	6,6	5,58	20	26	6,92	20
03155-16	16	20,7	28,6	22,03	12,1	6,9	6,6	22	29	7,24	20
03155-20	20	24,8	32,2	28,03	17,1	8,42	8,13	28	33	8,74	25
03155-25	25	30,4	40,2	35,03	21	10,22	10,16	35	41	10,54	25
03155-30	30	36,2	48,2	42,03	21,8	10,63	11,18	42	49	10,95	30
03155-35	35	41,3	54,2	48,03	25,1	12,18	14,78	48	55	12,5	32
03155-50	50	58,4	75,2	67,03	31,1	15,43	18,67	67	76	15,75	45

03156

Receiver bushes

Form B (screwed down from front)

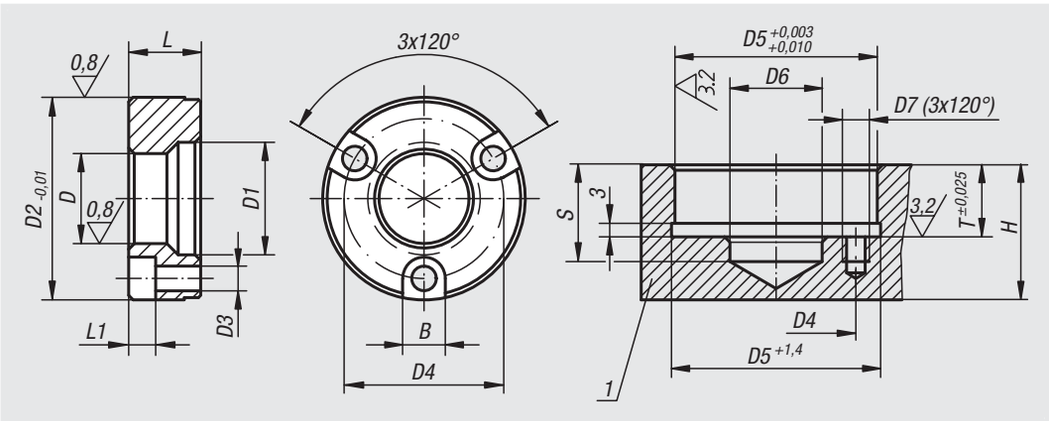

Material:
Carbon steel.

Version:
Tempered and black oxidised.

Sample order:
nlm 03156-13

Note:
Fastening screws included.

Drawing reference:
1) grid plate

Order No.	D	D1	D2	D3	D4	L	L1	B	D5	D6	D7	S	T	Min. grid plate thickness H
03156-13	13	17,3	34,99	4,4	25	11,56	4,5	7,6	35	13,5	M4x7	20	11,91	20
03156-16	16	20,7	36,99	4,4	29	11,56	4,5	7,6	37	21	M4x7	20	11,91	20
03156-20	20	24,8	44,99	5,4	35	15,82	6	9,5	45	21	M5x9	25	16,21	25
03156-25	25	30,4	54,99	6,4	42	19,94	7	11	55	25,5	M6x10	25	20,32	25
03156-30	30	36,2	59,99	6,4	48	21,77	7	11	60	30,5	M6x11	30	22,15	30
03156-35	35	41,3	69,99	8,4	56	22,61	9	14	70	40	M8x17	32	22,99	32
03156-50	50	58,4	91,99	10,4	75	31,12	11	17	92	55	M10x18	45	31,5	45

Mandrel collets

Material:
Mandrel mild steel.
Taper-head screw low-carbon steel

Version:
Mandrel black oxidised.
Taper-head screw case-hardened.

Sample order:
nlm 03157-081420

Note:
The mandrel collet is ideal for finish machining turned parts. The diameter “D” can be turned or milled to suit the workpiece ID.
Low design - no interfering clamp straps.
Tightened using a hex socket wrench or hydraulics.

* D min. = smallest diameter to which “D” may be turned or milled.

Assembly:
Expand the mandrel approx. 0.1 mm over the relaxed diameter. Turn or mill the mandrel to suit the internal diameter of the workpiece. The base flange can be centred in a pocket or using dowel pins.

Drawing reference:
1) taper-head screw

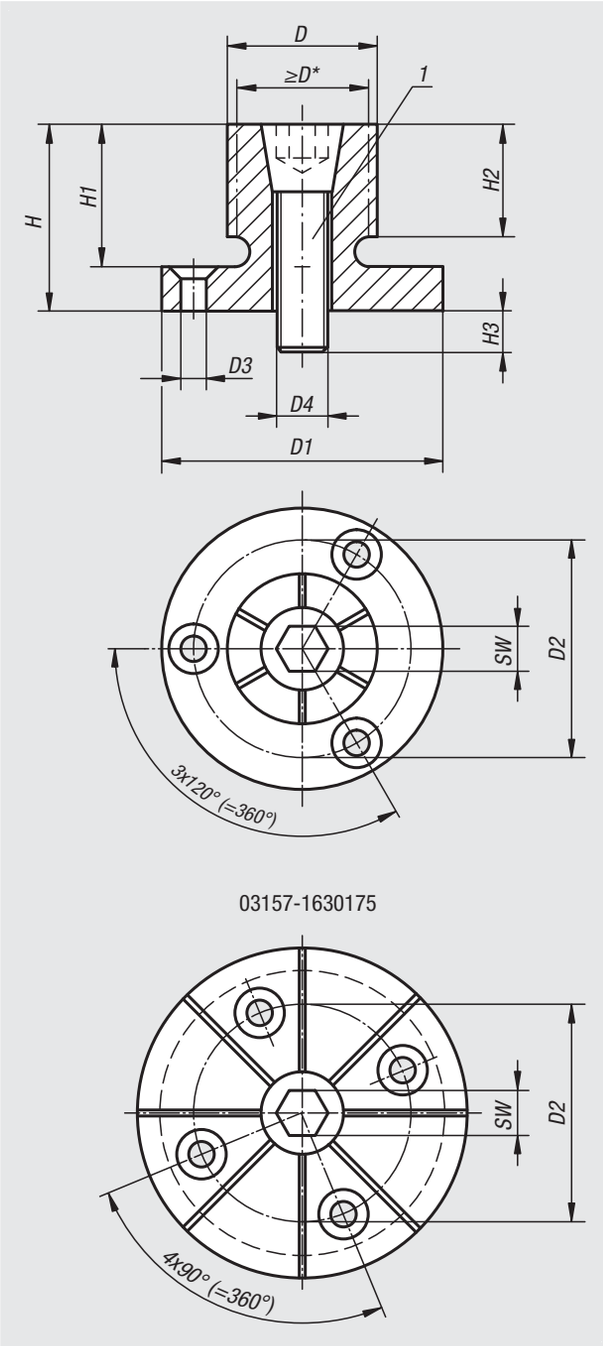

Order No.	D	D min.	D1	D2	D3 for screw ISO 10642	D4 Tapered-head bolt	H	H1	H2	H3	SW Tapered-head bolt	Tightening torque max. Nm	Clamping force max. kN
03157-020407	7,4	4,1	20 h9	13,7	M2	M2	10,7	7,6	6,1	4,1	1,5	0,7	1,1
03157-040812	12,4	8	29,72 h9	21	M3	M4	21,8	16	15	8	3	5	4,2
03157-061214	14,2	12,2	31,5 h9	23,1	M3	M6	24,9	19	15	12	5	17	8,5
03157-081420	20	13,5	37,5 h9	29	M3	M8	24,9	19	15	14	6	34	11,1
03157-062027	27	18	50 h9	39,4	M4	M10	28,6	22,2	17,5	17	8	60	20
03157-102535	35,3	23	56 h9	45,5	M4	M12	31,8	25,4	20,6	21	10	150	26,3
03157-123442	42	29,3	69,5 h8	55,9	M5	M16	39,6	31,8	27	22	14	280	44,5
03157-123452	51,5	29,3	75,5 h9	63,9	M5	M16	39,6	31,8	27	22	14	280	44,5
03157-163077	77,7	29,3	107,5 h9	92,5	M6	M16	45,5	37,6	32,3	20	14	280	44,5
03157-1630103	103	29,3	132,9 h9	118	M6	M16	45,5	37,6	32,3	20	14	280	44,5
03157-1630175	175	29,3	132,9 h9	118	M6	M16	45,5	37,6	32,3	20	14	280	44,5

Mandrel collets

with side lock

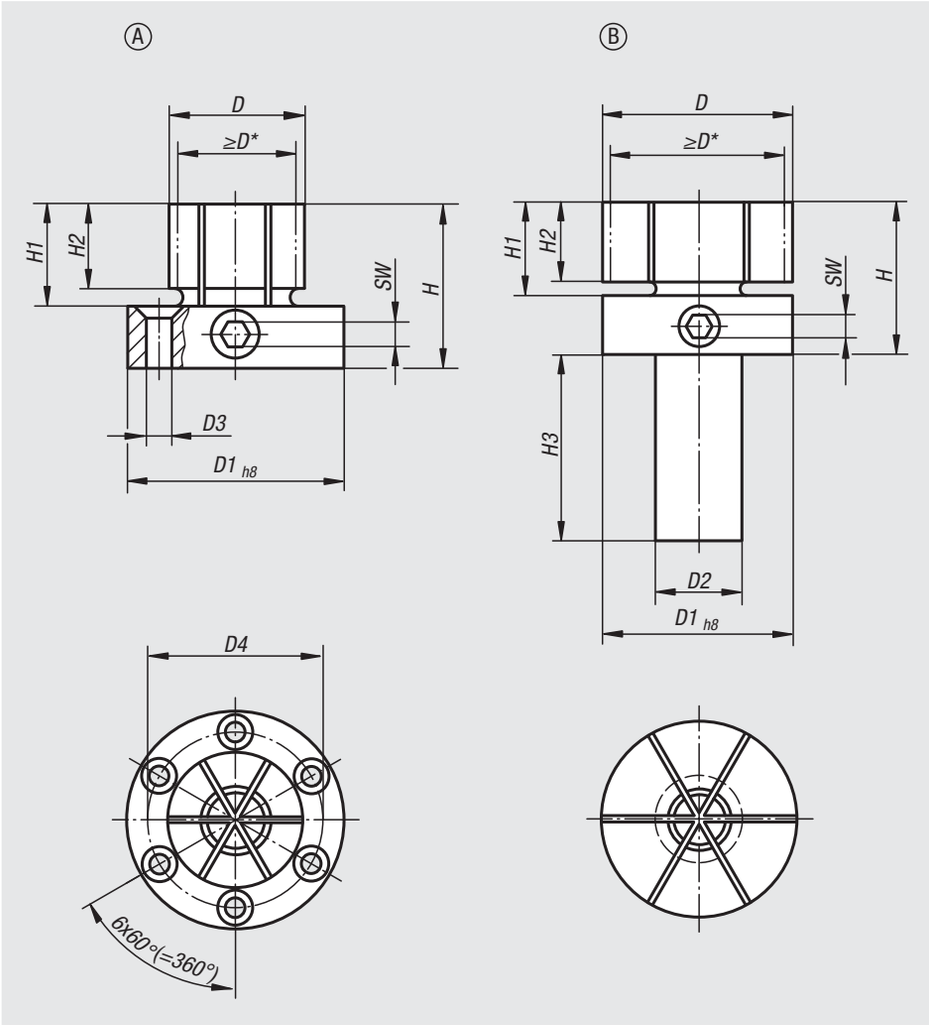

Material:
Mandrel mild steel.
Clamping screw carbon steel.

Version:
Mandrel black oxidised.
Clamping screw tempered to 10.9, hardened and PTFE coated.

Sample order:
nlm 03157-118029

Note:
The side lock make these mandrel collets ideal for finish machining parts with blind internal diameters. The diameter “D” can be turned or milled to suit the workpiece ID.

Manual tightening with hexagon socket wrench.

* D min. = smallest diameter to which “D” may be turned or milled.

Assembly:
Expand the mandrel approx. 0.1 mm over the relaxed diameter. Turn or mill the mandrel to suit the internal diameter of the workpiece. A locking ring is included for machining.
The shank or flange is centred in a reamed hole or pocket.
Form A is supplied with 6 fastening screws.

Drawing reference:
Form A: for machining centres, drilling and milling machines
Form B: with shaft for holding in lathe chucks

Order No.	Form	D	D min.	D1	D2	D3 for screw ISO 10642	D4	H	H1	H2	H3	SW	Tightening torque max. Nm	Clamping force max. kN
03157-118029	A	28,7	17,8	50	-	M4	39,4	41,3	22,4	17,5	-	6	66	20
03157-218053	B	53,3	18	53,3	25	-	-	44,4	25,4	21	45	6	66	20

Centring clamps

with ball or hexagon segments

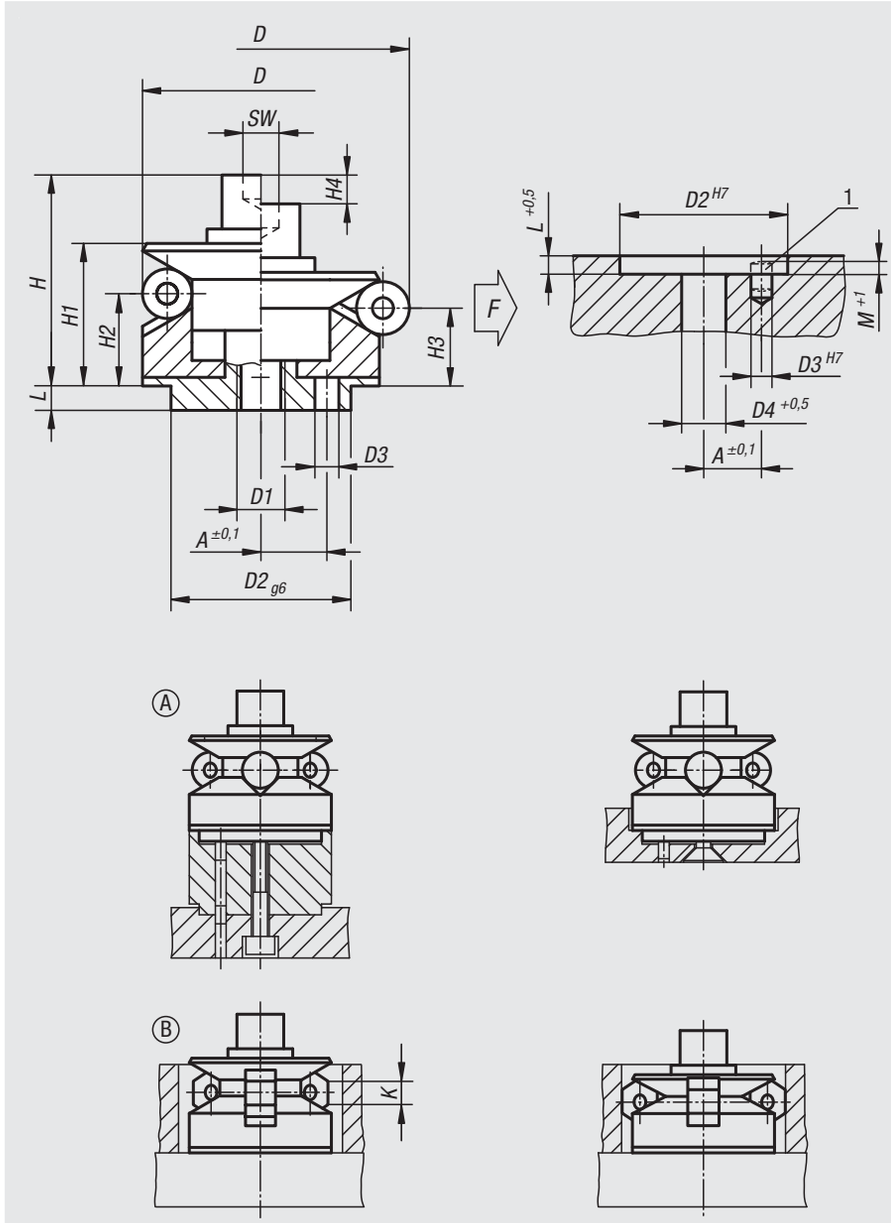

Material:
Body 1.2842.
Ball and hex segments 1.4112.
Tension spring 1.4310.

Version:
Body hardened and black oxidised.
Ball and hex segments hardened and ground.

Sample order:
nlm 03158-101203

Application:
To position and centre existing bores on the machining surface.

Advantages:
- Precise self-centring.
- Distortion free clamping.
- Large spread range.
- Low overall height.

Technical data:
Repetitive accuracy ±0.025
Concentric accuracy ±0.05

Drawing reference:
Form A: With balls for holes where light marking is acceptable.
Form B: With hexagons for sensitive hole surfaces.

1) Mounting aid:
pin to accurately position the mandrel segments.

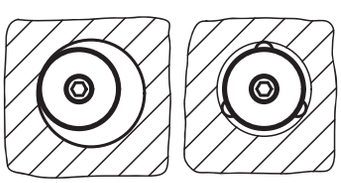

Centring clamps

with ball or hexagon segments

Centring clamps with ball segments

Order No.	Form	A	D min.	D max.	D1	D2	D3	D4	H	H1	H2	H3	H4	L	M	SW	Ball-Ø	No. of balls	F kN
03158-101203	A	3,5	11,7	14,2	M4	10	1,5	4,3	15	10	4,2	3	1,5	3,5	2,5	3	2,5	3	0,5
03158-101504	A	4,5	14,5	18,5	M4	12	2	4,3	19,5	14,5	9,8	8,6	2,3	5,5	3	3	4	3	3,5
03158-101905	A	5,5	18,5	22,5	M5	15	2,5	5,3	23,5	16,5	11,6	10,4	2,3	7,5	3	4	4	3	4
03158-102306	A	7	22,5	26,5	M6	20	3	6,4	28,8	19,8	14,2	13	2,3	6	4	5	4	3	4,5
03158-102706	A	7	26,5	30,5	M6	20	3	6,4	28,8	19,8	14,2	13	2,3	6	4,5	5	4	3	4,5
03158-103106	A	9	30,5	38,5	M6	25	4	6,4	32,7	23,1	14,2	11,9	4,6	7	4,5	5	8	3	4,5
03158-103908	A	11	38,5	46,5	M8	30	4	8,4	39,2	27,2	17,8	15,5	4,6	7,5	4,5	6	8	6	6,5
03158-104708	A	11	46,5	54,5	M8	30	4	8,4	39,2	27,2	18	15,7	4,6	7,5	4,5	6	8	6	6,5
03158-105510	A	15	54,5	70,5	M10	45	5	10,5	54,6	40,6	23,7	19,1	9,3	9	5,5	8	16	6	8
03158-107112	A	17	70,5	86,5	M12	60	5	13	63,1	46,1	28,3	23,7	9,3	10	5,5	10	16	6	10
03158-108712	A	25	86,5	102,5	M16	60	5	17	73	51	30,2	25,7	9,3	10	5,5	14	16	6	12,5

Centring clamps with hexagon segments

Order No.	Form	A	D min.	D max.	D1	D2	D3	D4	H	H1	H2	H3	H4	L	M	K	SW	No. of hex	F kN
03158-201504	B	4,5	14,5	18,5	M4	12	2	4,3	19,5	14,5	9,8	8,6	2,3	5,5	3	4	3	3	3,5
03158-201905	B	5,5	18,5	22,5	M5	15	2,5	5,3	23,5	16,5	11,6	10,4	2,3	7,5	3	4	4	3	4
03158-202306	B	7	22,5	26,5	M6	20	3	6,4	28,8	19,8	14,2	13	2,3	6	4	4	5	3	4,5
03158-202706	B	7	26,5	30,5	M6	20	3	6,4	28,8	19,8	14,2	13	2,3	6	4,5	4	5	3	4,5
03158-203106	B	9	30,5	38,5	M6	25	4	6,4	32,7	23,1	14,2	11,9	4,6	7	4,5	8	5	3	4,5
03158-203908	B	11	38,5	46,5	M8	30	4	8,4	39,2	27,2	17,8	15,5	4,6	7,5	4,5	8	6	6	6,5
03158-204708	B	11	46,5	54,5	M8	30	4	8,4	39,2	27,2	18	15,7	4,6	7,5	4,5	8	6	6	6,5
03158-205510	B	15	54,5	70,5	M10	45	5	10,5	54,6	40,6	23,7	19,1	9,3	9	5,5	16	8	6	8
03158-207112	B	17	70,5	86,5	M12	60	5	13	63,1	46,1	28,3	23,7	9,3	10	5,5	16	10	6	10
03158-208712	B	25	86,5	102,5	M16	60	5	17	73	51	30,2	25,7	9,3	10	5,5	16	14	6	12,5

Centring clamps

with ball or hexagon segments

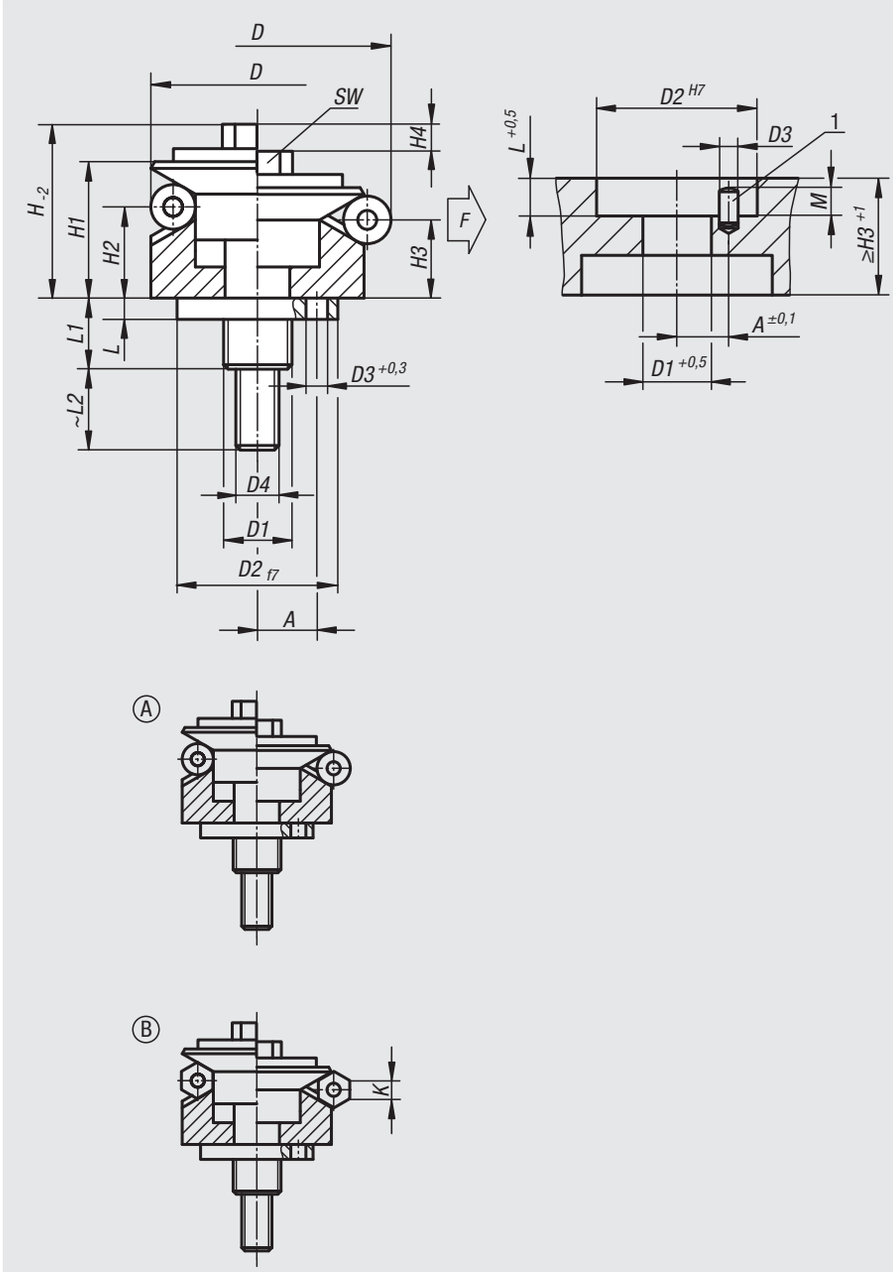

Material:
Body 1.2842.
Ball and hex segments 1.4112.
Tension spring 1.4310.

Version:
Body hardened and black oxidised.
Ball and hex segments hardened and ground.

Sample order:
nlm 03158-0101203

Application:
For centre positioning and clamping in blind holes. Operated from below, manual or automatic using pneumatics or hydraulics.

Advantages:
- Precise self-centring.
- Distortion free clamping.
- Large spread range.
- Low overall height.
- Positive down force.

Technical data:
Repetitive accuracy ±0.025
Concentric accuracy ±0.05

Drawing reference:
Form A: With balls for holes where light marking is acceptable.
Form B: With hexagons for sensitive hole surfaces.

1) Mounting aid:
pin to accurately position the mandrel segments.

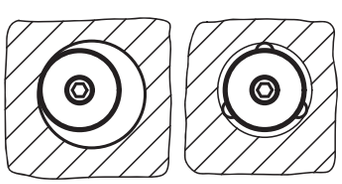

Centring clamps

with ball or hexagon segments

Centring clamps with ball segments

Order No.	Form	A	D min.	D max.	D1	D2	D3	D4	H	H1	H2	H3	H4	L	L1	L2	M	SW	Ball-Ø	No. of balls	F kN
03158-0101203	A	3,5	11,7	14,2	M5	10	1,5	M3	12,8	10	4,2	3	1,4	3,5	11	10	2	5,5	2,5	3	0,5
03158-0101503	A	4,5	14,5	18,5	M6	12	2	M3	17,3	14,5	9,8	8,6	2,3	5,5	14,1	12	2,5	5,5	4	3	3,5
03158-0101904	A	5,5	18,5	22,5	M8	15	2,5	M4	20,9	16,5	11,6	10,4	2,3	7,5	18,2	14	3,5	7	4	3	4
03158-0102305	A	7	22,5	26,5	M10	20	3	M5	25,4	19,8	14,2	13	2,3	6	17,4	15	3,5	8	4	3	4,5
03158-0102705	A	7	26,5	30,5	M10	20	3	M5	25,4	19,8	14,2	13	2,3	6	17,4	15	3,5	8	4	3	4,5
03158-0103106	A	9	30,5	38,5	M12	25	4	M6	30,3	23,1	14,2	11,9	4,6	7	21,9	20	3,5	10	8	3	4,5
03158-0103906	A	11	38,5	46,5	M12	30	4	M6	34,2	27,2	17,8	15,5	4,6	7,5	22,5	20	4,5	10	8	6	6,5
03158-0104706	A	11	46,5	54,5	M12	30	4	M6	34,2	27,2	18	15,7	4,6	7,5	22,5	20	6,5	10	8	6	6,5
03158-0105508	A	15	54,5	70,5	M14x1,5	45	5	M8	49,9	40,6	23,7	19,1	9,3	9	24,5	32	6,5	13	16	6	8
03158-0107108	A	17	70,5	86,5	M16x1,5	60	5	M8	55,4	46,1	28,3	23,7	9,3	10	29,4	20	6,5	13	16	6	10
03158-0108708	A	25	86,5	102,5	M16x1,5	60	5	M10	61,6	51	30,2	25,7	9,3	10	29,4	25	6,5	17	16	6	12,5

Centring clamps with hexagon segments

Order No.	Form	A	D min.	D max.	D1	D2	D3	D4	H	H1	H2	H3	H4	L	L1	L2	M	K	SW	No. of hex	F kN
03158-0201503	B	4,5	14,5	18,5	M6	12	2	M3	17,3	14,5	9,8	8,6	1,4	5,5	14,1	12	2,5	4	5,5	3	3,5
03158-0201904	B	5,5	18,5	22,5	M8	15	2,5	M4	20,9	16,5	11,6	10,4	2,3	7,5	18,2	14	3,5	4	7	3	4
03158-0202305	B	7	22,5	26,5	M10	20	3	M5	25,4	19,8	14,2	13	2,3	6	17,4	15	3,5	4	8	3	4,5
03158-0202705	B	7	26,5	30,5	M10	20	3	M5	25,4	19,8	14,2	13	2,3	6	17,4	15	3,5	4	8	3	4,5
03158-0203106	B	9	30,5	38,5	M12	25	4	M6	30,3	23,1	14,2	11,9	4,6	7	21,9	20	3,5	8	10	6	4,5
03158-0203906	B	11	38,5	46,5	M12	30	4	M6	34,2	27,2	17,8	15,5	4,6	7,5	22,5	20	4,5	8	10	6	6,5
03158-0204706	B	11	46,5	54,5	M12	30	4	M6	34,2	27,2	18	15,7	4,6	7,5	22,5	20	6,5	8	10	6	6,5
03158-0205508	B	15	54,5	70,5	M14	45	5	M8	49,9	40,6	23,7	19,1	9,3	9	24,5	32	6,5	16	13	6	8
03158-0207108	B	17	70,5	86,5	M16	60	5	M8	55,4	46,1	28,3	23,7	9,3	10	29,4	20	6,5	16	13	6	10
03158-0208708	B	25	86,5	102,5	M16	60	5	M10	61,6	51	30,2	25,7	9,3	10	29,4	25	6,5	16	16	6	12,5

Ball-end locking screw

with rotating ball

Material:
Screw and ball steel

Version:
Screw black oxidised.
Ball hardened.

Sample order:
nlm 03159-05010

Note:
Locate, align and clamp round and flat parts, dies, castings, axles, shafts etc. with the rotating ball.

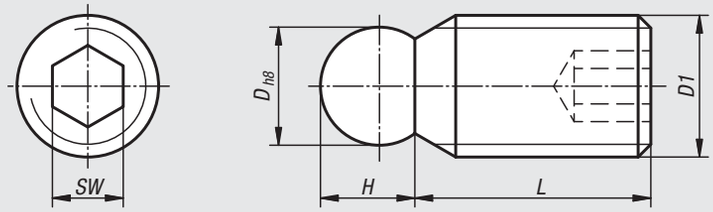

dimensions for flat parts

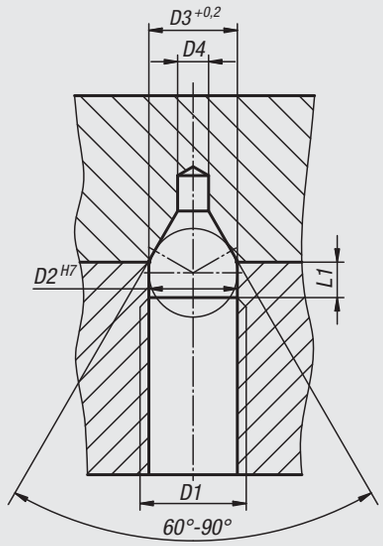

dimensions for round parts

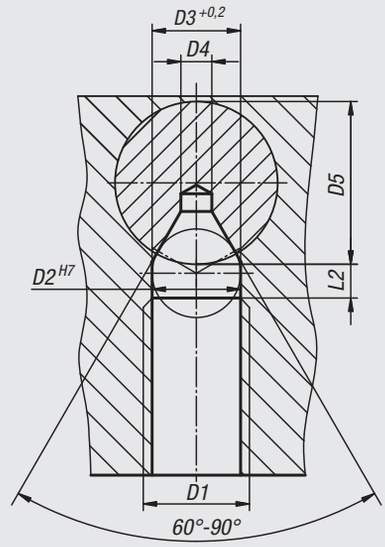

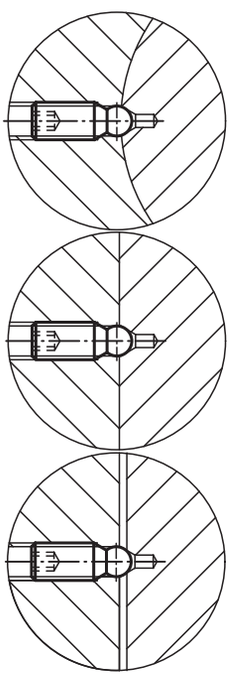

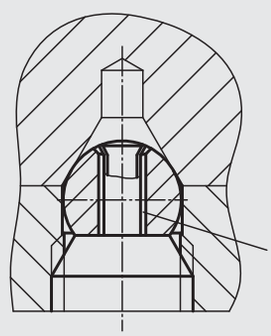

The full diameter of the ball must sit in the guide hole and the ball must sit tangential to the 60°-90° countersink in the workpiece, this governs the screw-in depth.
As the ball can rotate on the screw end, distortion cannot occur.

Clearance
for distortion-free locating and tightening

Order No.	D	D1	D2	D3	D4 max.	D5 min.	H	L	L1	L2	SW
03159-05010	4	M5	4	4	1,6	10	3,3	10	1,7	1,5	2,5
03159-08014	6	M8	6	6	2	14	5	14	2,5	2	4
03159-12020	10	M12	10	10	3,5	20	8	20	4	3	6

Centring V

Material:
Carbon steel 1.1181.

Version:
Black oxidised.

Sample order:
nlm 03160-02

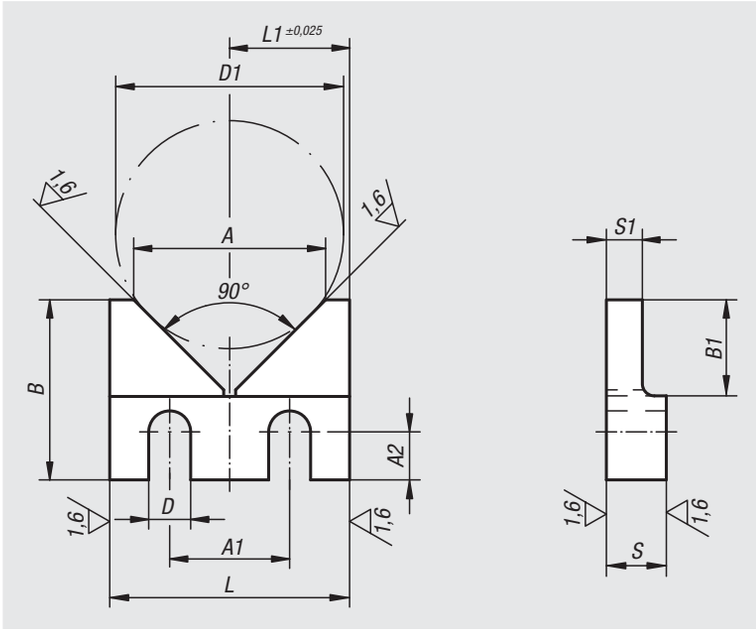

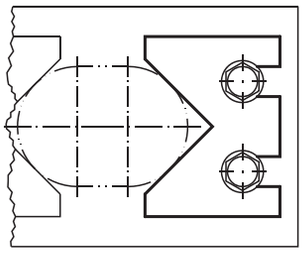

Order No.	L	L1	B	B1	S	S1	D	D1 max.	A	A1	A2
03160-01	40	20	30	16	10	6	7	38	32	20	8
03160-02	50	25	40	20	12	8	9	46	40	25	12
03160-03	63	31,5	50	25	16	10	11	58	50	32	16

Locating cylinders

pneumatic

Material:
Carbon steel.

Version:
nickel-plated.

Sample order:
nlm 03161-112

Note:
The 3 clamping balls are pneumatically released. The 3 clamping balls retract and the fixture can be exchanged. If the air is stopped, the 3 clamping balls advance and the fixture is clamped.
This easy-to-operate system significantly reduces the changeover times.

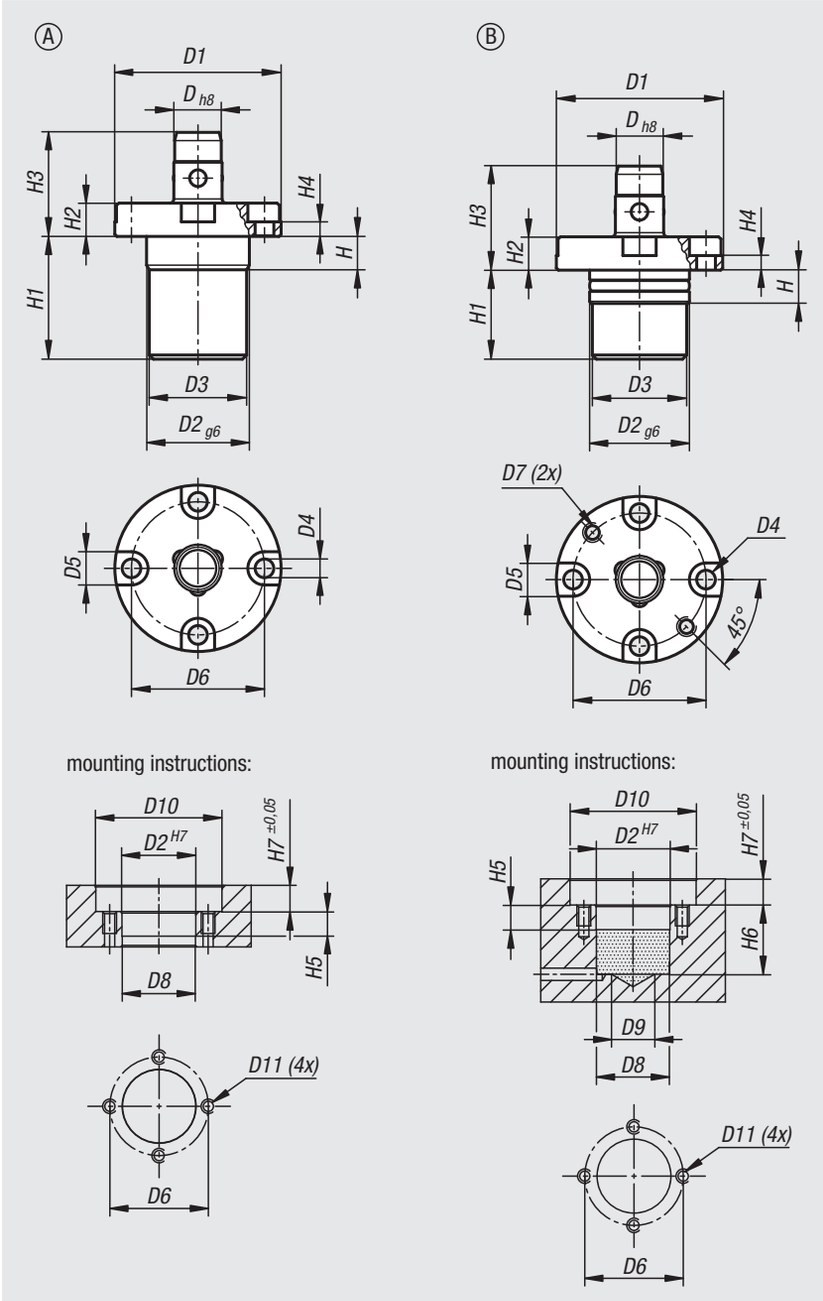

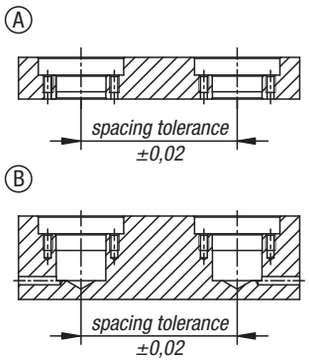

Order No.	Form	D	D1	D2	D3	D4	D5	D6	D7	D8	D9	D10	D11	H	H2	H1	H3	H4	H5	H6	H7	Retaining force F1 N
03161-112	A	12	40	24	23,4	4,5	8	32	-	23,8	-	41	M4	8	8	29,5	25	3,5	8,5	-	8,5	250
03161-116	A	16	51	32	31,4	5,5	9,5	41	-	31,8	-	52	M5	8,5	9,5	31,7	28,5	4	9	-	10	350
03161-212	B	12	40	24	23,4	4,5	8	32	M4	23,8	14	41	M4	8	8	24,5	25	3,5	8,5	25,5	8,5	250
03161-216	B	16	51	32	31,4	5,5	9,5	41	M5	31,8	20	52	M5	8,5	9,5	25,5	28,5	4	9	26,5	10	350

Locating bushes

for pneumatic locating cylinder

Material:
Carbon steel.

Version:
nickel-plated.

Sample order:
nlm 03162-12

Note:
Locating bushes are placed in fixture or interchangeable subplates and form the counterpart to the locating cylinder. The locating bushes are centred in a reamed hole and then fastened with 4 screws.
The balls of the locating cylinder engage in the groove in the locating bush, thereby forming a fast, secure and highly accurate changeover unit, and reducing setup and changeover times.

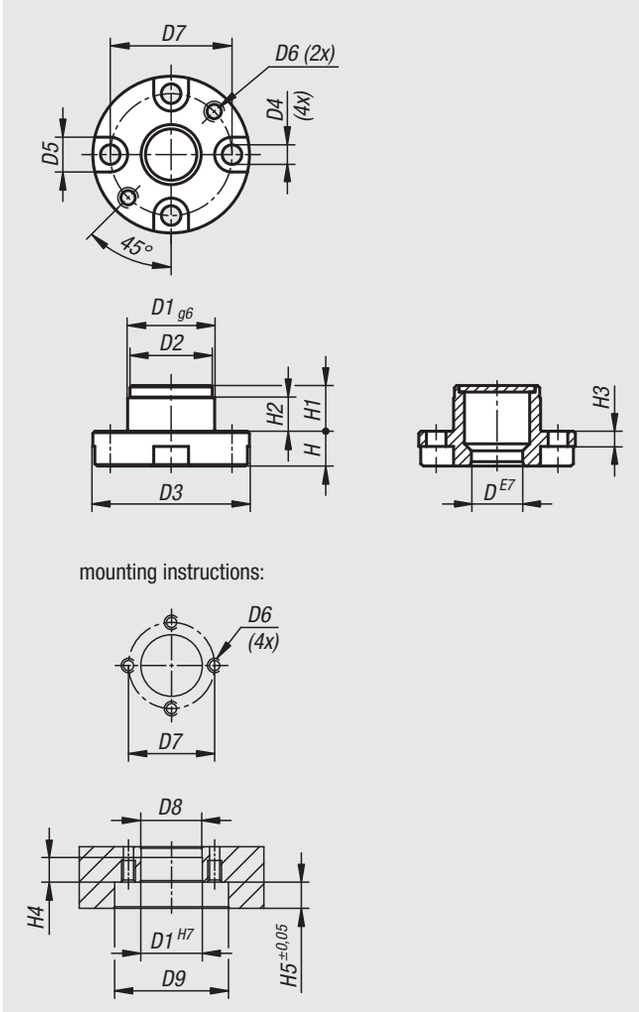

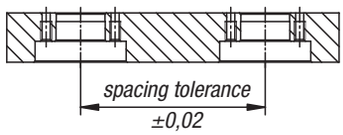

Order No.	D	D1	D2	D3	D4	D5	D6	D7	D8	D9	H	H1	H2	H3	H4	H5
03162-12	12,1	20	19,6	36	4,5	8	M4	28	19,8	37	8	10,5	7,5	3,5	8	8,5
03162-16	16,1	25	24,6	44	5,5	9,5	M5	34	24,8	45	9,5	11	7	4	7,5	10

Machinable collets, square

Material:
Body EN AC-51400.
Wedges high-carbon steel.

Version:
Body natural colour anodised.
Wedges black oxidised.

Sample order:
nlm 03163-32040

Note:
The lateral clamping screw tightens the jaws and clamps the workpiece on the circumference.
The simple and compact design allows 2 workpieces to be clamped.
The clamping travel is max. 0.5 mm.
The jaws must be pre-tensioned before machining the contour, the supplied clamping ring is used for this purpose.

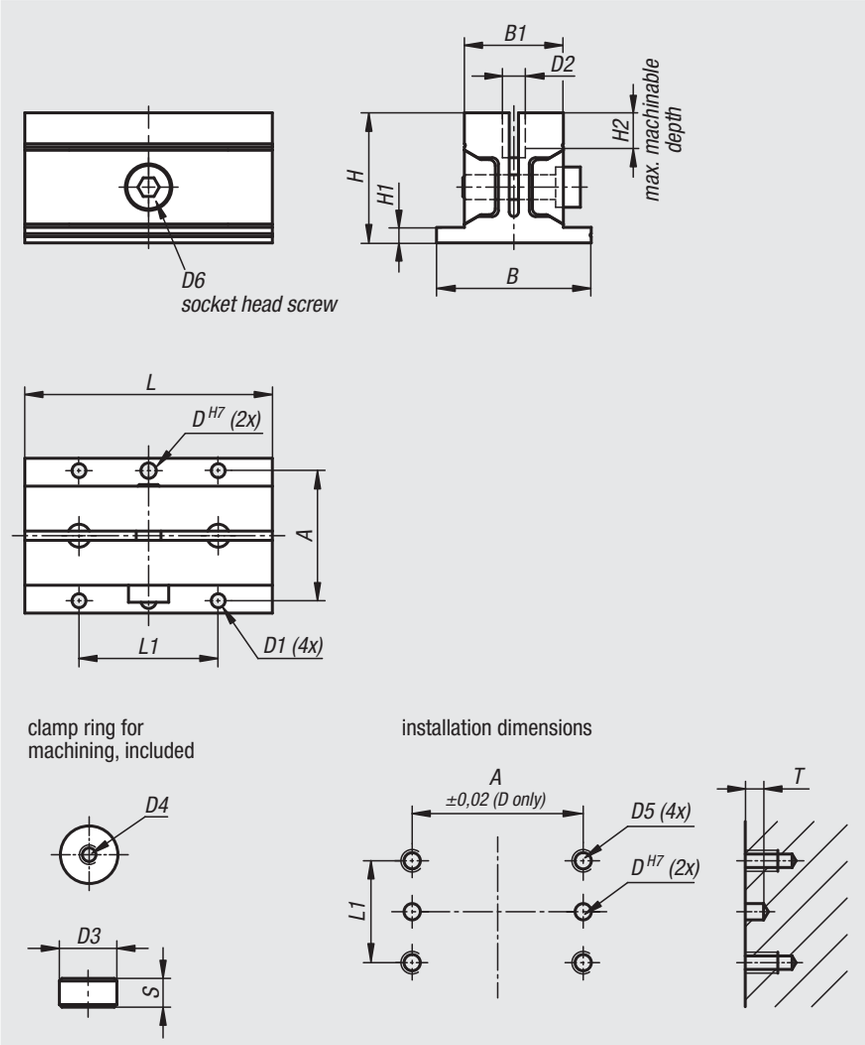

Order No.	A	B	B1	D	D1	D2	D3	D4	D5	D6	H	H1	H2	L	L1	S	T	Clamping force N	Tightening torque Nm
03163-32040	42	50	32	5	4,5	7,4	7	M3x0,5	M4x0,7	M6	42	5	10	40	25	3,5	5	2500	7,5
03163-32080	42	50	32	5	4,5	7,7	7	M3x0,5	M4x0,7	M8	42	5	10	80	45	3,5	5	2500	14
03163-50050	62	72	50	6	5,5	11,4	11	M3x0,5	M5x0,8	M10	63	7	15	50	30	5,5	8	5500	26
03163-50100	62	72	50	6	5,5	11,4	11	M3x0,5	M5x0,8	M12	63	7	15	100	58	5,5	8	5500	46

Machinable collets, square

Machining the jaws:

1. Inserting the clamp ring:
Insert the clamp ring into the bore in the centre of and between the jaws.
Tighten the clamp screw to hold the clamp ring in place.
(Use a cap screw to aid inserting the clamp ring)

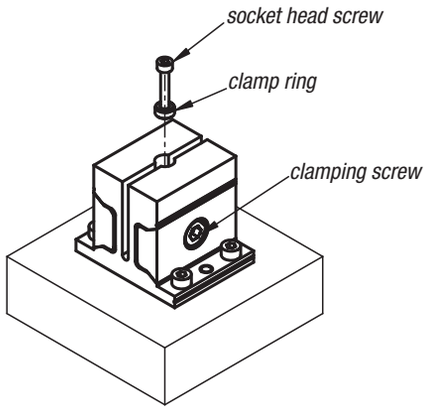

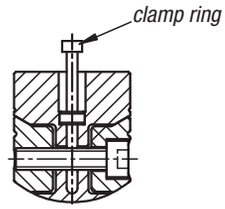

Note:
The clamp ring must be placed at the bottom of the bore.

2. Machine the jaws:
Remove the cap screw from the clamp ring.
Machine the contour of the workpiece to be held into the jaws.

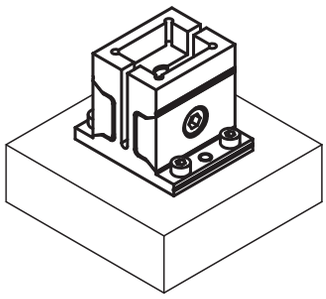

Note:
The contour should not be deeper than the max. permitted depth.

3. Mounting the workpiece:
Loosen the clamp screw and remove the clamp ring.
Place the workpiece into the contour and tighten the clamp screw.

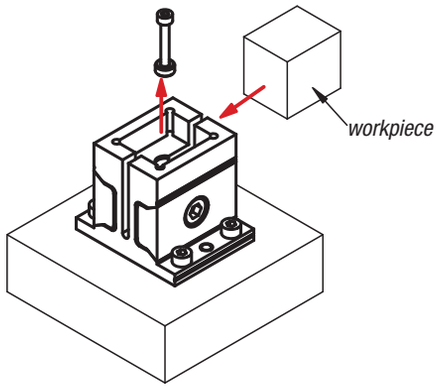

Applications

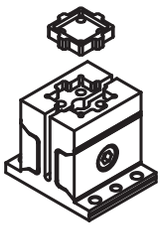

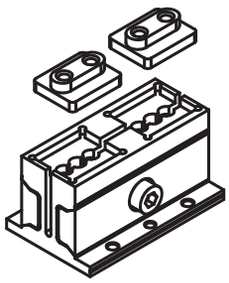

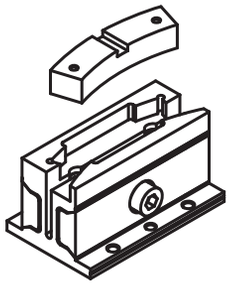

Centring clamps

round

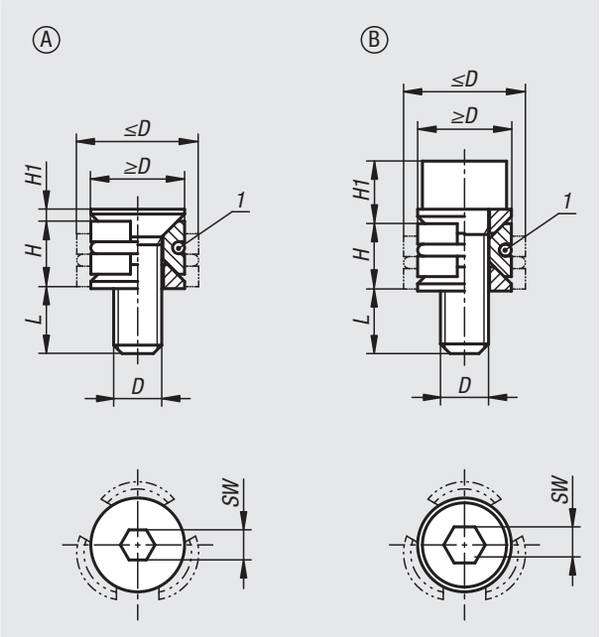

Material:
Carbon steel.

Version:
Hardened (33–39 HRC) and black oxidised.

Sample order:
nlm 03164-10804

Note:
The centring clamp enables a workpiece to be centred and clamped in the bore.
The wedges generate higher clamping forces.
The centring clamp is available with a cap screw or countersunk screw.
Centring clamp with pull-down effect.

Drawing reference:
Form A: with countersunk screw
Form B: with cap screw

Dimension H refers to the height at ≥D.
Dimension L refers to the length at ≤D

1) O-ring

Order No.	Form	D	D min.	D max.	H	H1	L	SW	Clamping force kN	Tightening torque Nm
03164-10804	A	M4	8	10,3	5,5	0,9	7,3	2,5	0,9	2,1
03164-11005	A	M5	10	12,3	6,4	1,1	9,1	3	1,5	4,3
03164-11206	A	M6	12	16,3	8,6	1,3	11,2	4	2,1	7,3
03164-11608	A	M8	16	22	11,5	1,6	16,2	5	4	18
03164-20804	B	M4	8	10,3	5,5	5,1	7,1	3	1,5	2,7
03164-21005	B	M5	10	12,3	6,4	6,2	9	4	2,5	5,4
03164-21206	B	M6	12	16,3	8,6	7,9	10,6	5	5	9,1
03164-21608	B	M8	16	22	11,5	10,4	15,4	6	9	25

Centring clamps

round

Technical information:

- These clamps grip the inside diameter of a workpiece.
- The wedge shape enables high clamping forces on the workpiece.

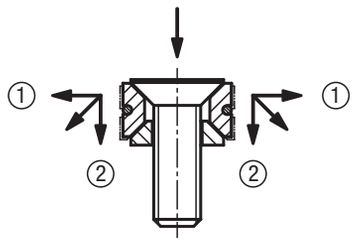

(Jaws exert positive down force)
1 Horizontal thrust against workpiece
2 Vertical thrust prevents the workpiece lifting

Form A:

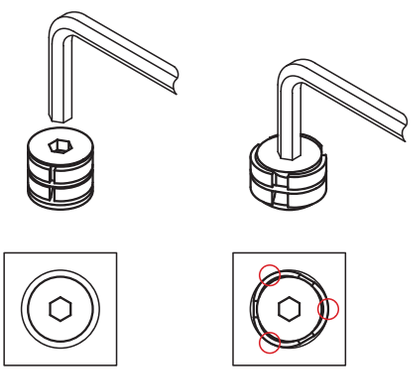

unclamped clamped

Form B:

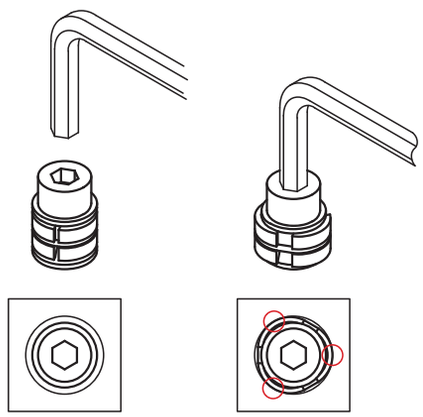

unclamped clamped

Note:
The clamp makes point contact with the bore wall when clamped.

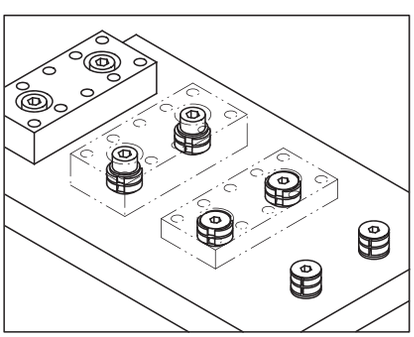

For accurate repeat positioning use these clamps together with a positioning unit.
Clamping is carried out with the centring clamp.

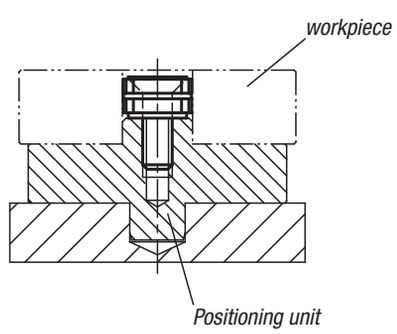

Centring clamps

Material:
Body steel.
Bushes carbon steel.

Version:
Black oxidised.

Sample order:
nlm 03165-0615

Note:
These centring clamps allow workpieces to be centred on and clamped in a bore. The clamps have a wide expansion range. The series covers a bore range of Ø12 to Ø30 mm. To increase the centring accuracy the clamps with internal thread have a centring spigot (D2) for a locating hole. These are also suitable for M6 grid systems (see application example).

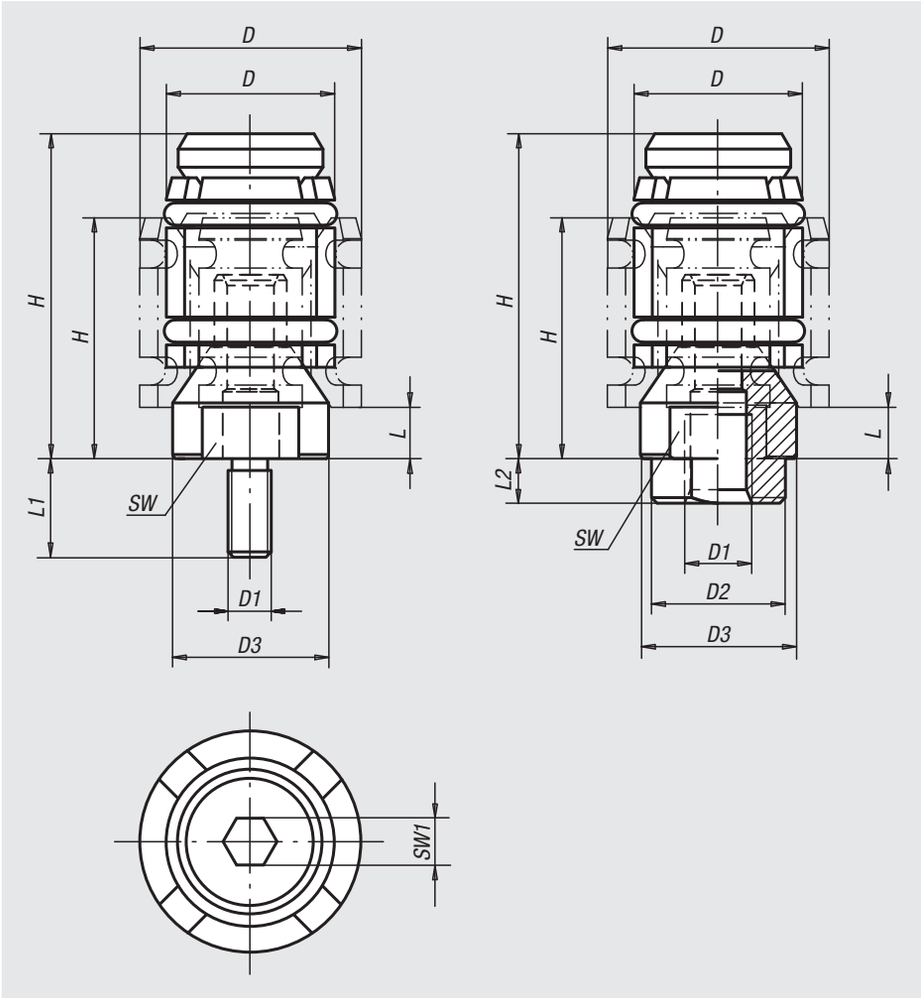

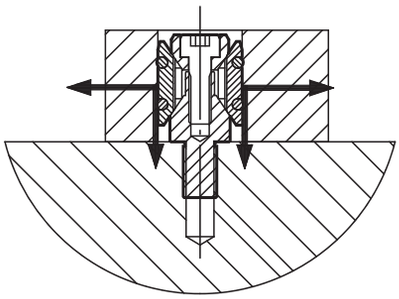

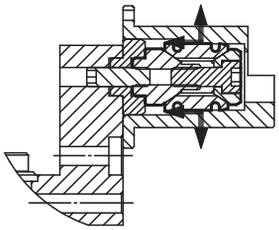

Order No.	Version	D1	L1	L2	D min.	D max.	D2	D3	H min.	H max.	L min.	SW	SW1
03165-0615	internal thread	M6	-	4	12	15	12	11,4	22	27,5	4,8	9	2,5
03165-0619	internal thread	M6	-	4	15	19	12	14	24,5	32	4,8	12	4
03165-0624	internal thread	M6	-	4	19	24	12	17,8	26	35	4,5	15	5
03165-0630	internal thread	M6	-	4	24	30	12	23	32	44,5	7	19	5
03165-061215	external thread	M6	12	-	12	15	-	11,4	22	27,5	4,8	9	2,5
03165-061219	external thread	M6	12	-	15	19	-	14	24,5	32	4,8	12	4
03165-081624	external thread	M8	16	-	19	24	-	17,8	26	35	4,5	15	5
03165-081630	external thread	M8	16	-	24	30	-	23	32	44,5	7	19	5

Adapter for collet

Material:
Carbon steel.

Version:
nickel-plated.

Sample order:
nlm 03167-065

Note:
With this adaptor, collets for internal and external clamping can be mounted.
The workpiece is clamped by tightening the screw on the side.
A dowel pin is used to secure the adaptor against rotation.
The collet is positioned on the adaptor with 2 dowel pins.

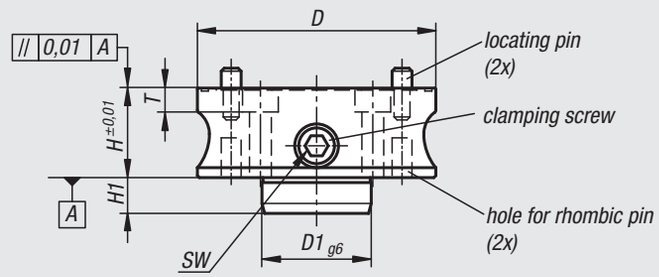

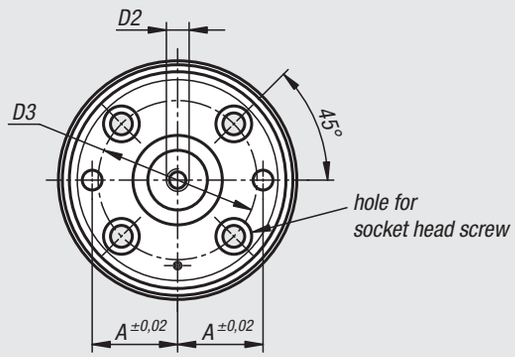

installation dimensions

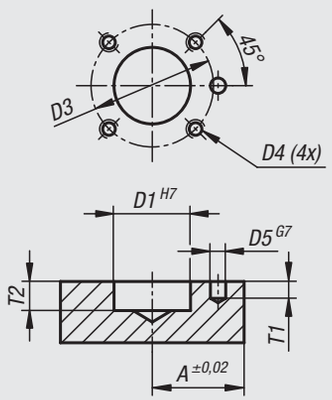

Order No.	D	A	D1	D2	D3	D4	D5	H	H1	SW	T	T1	T2	for screws	Tightening torque max. Nm	F1 kN	F2 kN
03167-065	65	22	28	M8	42	M6x1	6	35	12	8	8	6	13	M6	15	4,5	4,5
03167-090	90	30	42	M10	60	M8x1,25	8	40	14	8	10	8	15	M8	25	7	7
03167-120	120	43	55	M10	80	M10x1,5	10	45	18	10	12	11	19	M10	40	10	10
03167-160	160	60	63	M12	110	M12x1,75	12	50	24	10	14	13	25	M12	40	12	10

Collet

for external clamping

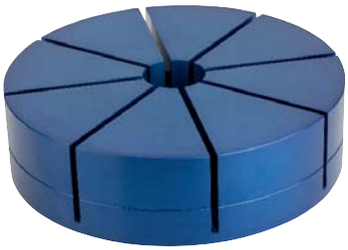

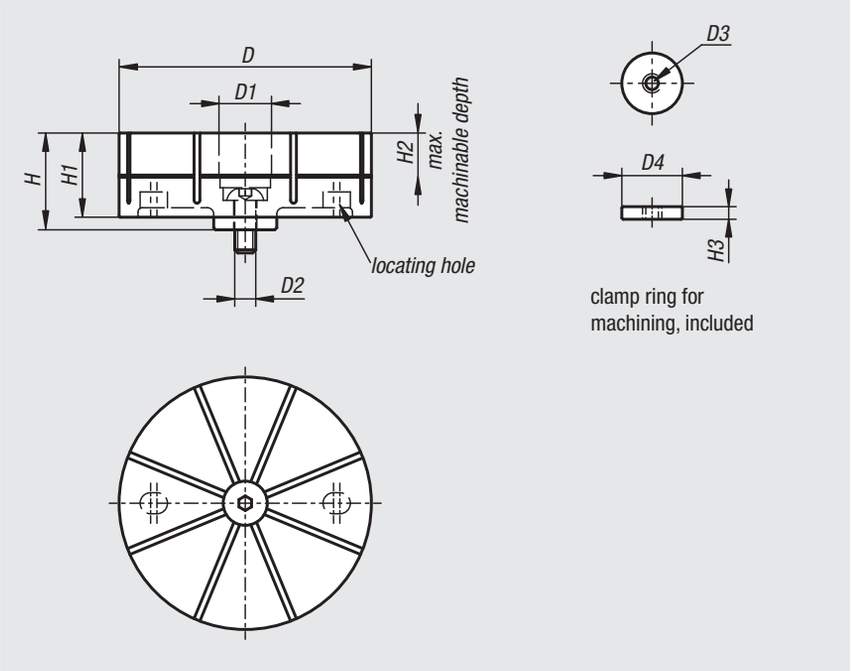

Material:
High-strength aluminium alloy

Version:
blue anodised.

Sample order:
nlm 03168-1065

Note:
Collets for clamping external contours.
The contour of the workpiece to be held is inserted into the collet. Free-form and asymmetrical contours can be held.
The collet mechanism enables a secure clamping of the workpiece.
Clamping travel per collet segment (8x) max. 0.15 mm.
Workpiece repeat accuracy: ±0.03.
Collet repeat accuracy: ±0.02.
Matching adaptor 03167.

Order No.	D	D1	D2	D3	D4	H	H1	H2	H3
03168-1065	65	21	M8	M5	20	29	25	10	4
03168-1090	90	25	M10	M6	24	40	35	15	5
03168-1120	120	25	M10	M6	24	46	40	20	5
03168-1160	160	29	M12	M8	28	52	45	25	6

Collet

for external clamping

1. Mounting collet:
- Insert an O-ring into the groove on the top face of the clamp base.
- Set a collet on the base making sure the locating pins fit into the locating holes on the undeside of the collet. Secure the collet using a buttonhead hex socket screw.

Note:
Before mounting the collet, ensure the cam cylinder is fully loosened by turning the tightening screw clockwise until it stops.

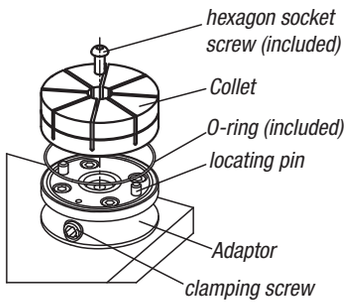

2. Machining collet:

2.1
Place the clamp ring in the centre of the collet.
(Use a screw as an insertion aid)

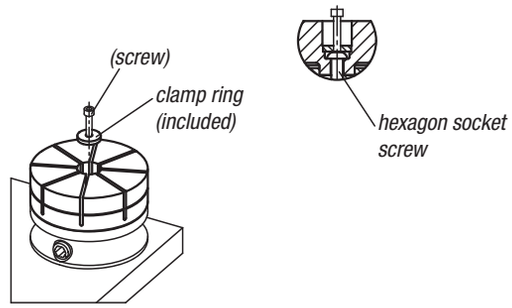

2.2
Tighten the cam cylinder to clamp the clamp ring (recommended torque: 15Nm).
Remove the screw from the clamp ring before machining.

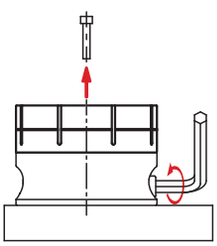

2.3
Machine the contour of the part that is to be held into the collet.

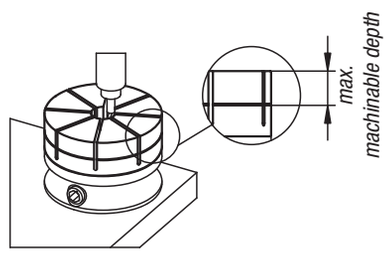

Note:
Do not machine the contour deeper than the permitted depth.

3. Mounting workpiece:
- Loosen the cam cylinder and remove the clamp ring.
- Place the workpiece in the contour and re-tighten the cam cylinder.

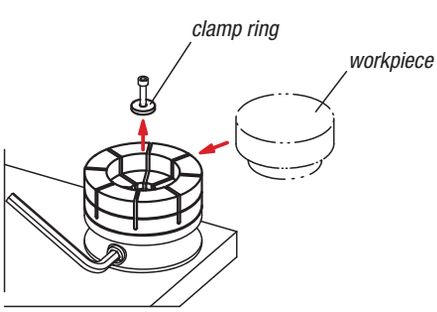

Performance curve

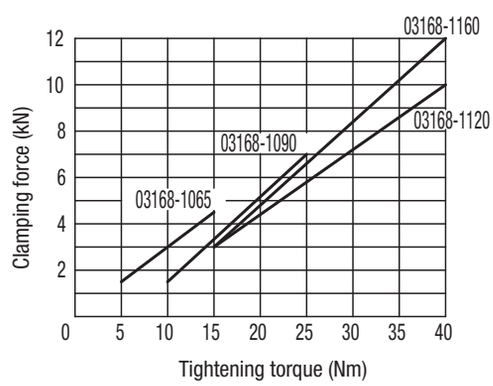

To avoid damaging the collet do not tighten the clamp without a workpiece or clamp ring.
Observe the maximum tightening torque in the table.

Collet

for internal clamping

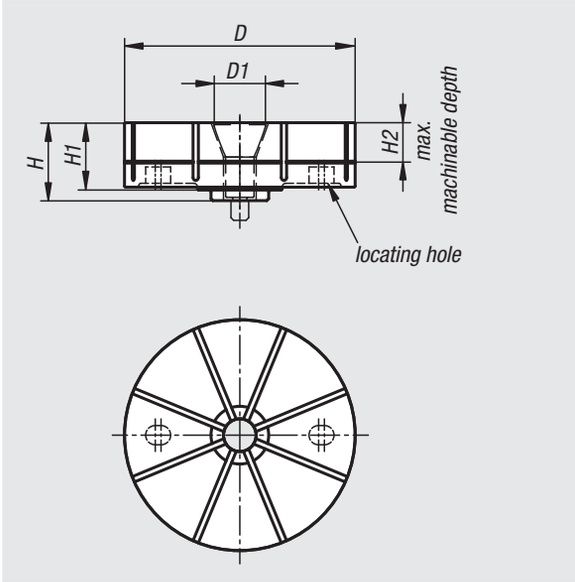

Material:
High-strength aluminium alloy

Version:
natural colour anodized

Sample order:
nlm 03168-2065

Note:
Collets for clamping internal contours.
The contour of the workpiece to be held is inserted into the collet. Free-form and asymmetrical contours can be held.
The collet mechanism enables a secure clamping of the workpiece.
Clamping travel per collet segment (8x) max. 0.15 mm.
Workpiece repeat accuracy: ±0.03.
Collet repeat accuracy: ±0.02.
The traction cone 03169 is required when using the collet for internal clamping.
Matching adaptor 03167.

Order No.	D	D1	H	H1	H2
03168-2065	65	22,5	28,5	25	10
03168-2090	90	27	34,5	30	15
03168-2120	120	29	40,5	35	20
03168-2160	160	33	46,5	40	25

Collet

for internal clamping

1. Mounting collet:
- Insert an O-ring into the groove on the top face of the clamp base.
- Set a collet on the base making sure the locating pins fit into the locating holes on the undeside of the collet. Secure the collet using a tapered screw.

Note:
Before mounting the collet, ensure the cam cylinder is fully loosened by turning the tightening screw clockwise until it stops.

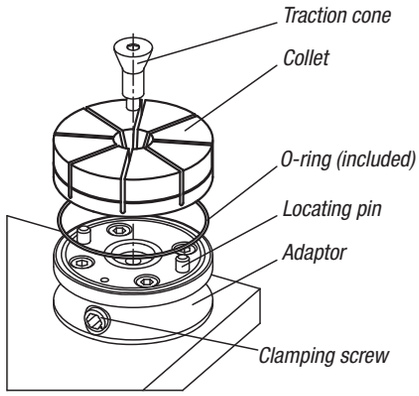

2. Machining collet:

2.1
Fully loosen the cam cylinder and measure the OD of the collet. Tighten the cam cylinder until the collet OD has expanded by 0.15 mm.

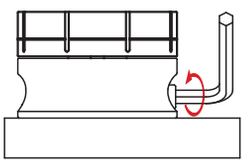

2.2
Machine the contour of the part that is to be held into the collet.

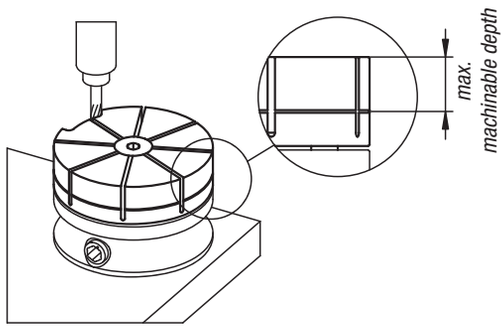

3. Mounting workpiece:
- Loosen the cam cylinder and remove the clamp ring.
- Place the workpiece in the contour and re-tighten the cam cylinder.

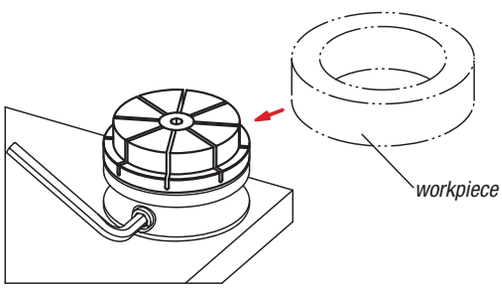

Performance curve

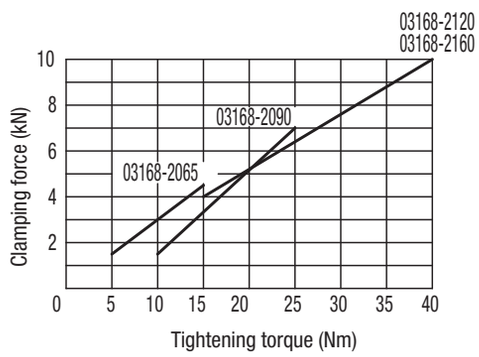

To avoid damaging the collet do not tighten the clamp without a workpiece or clamp ring.
Observe the maximum tightening torque in the table.

Technical information for collets

for external clamping

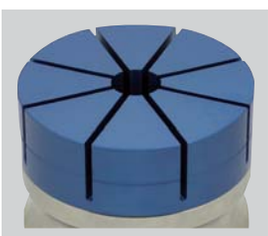

1. Prepare collet

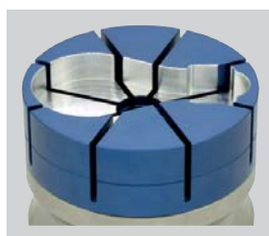

2. Machine collet

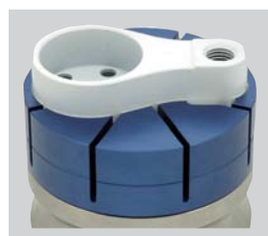

3. Position workpiece

4. Tighten cam cylinder

for internal clamping

1. Prepare collet

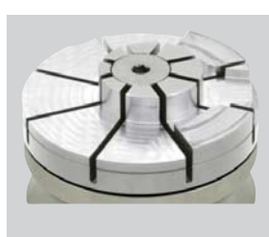

2. Machine collet

3. Position workpiece

4. Tighten cam cylinder

Technical information for collets

Series clamping

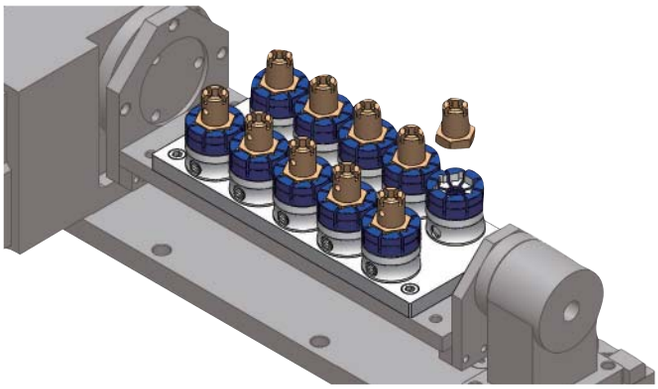

Small OD allows clamping in series with a limited space.

Fixture for individual parts

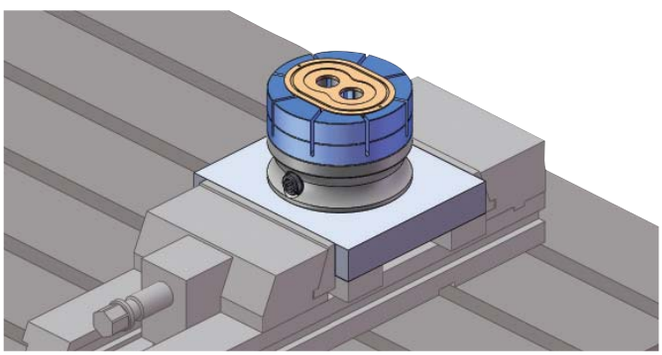

Clamp in a vice by mounting on a plate.

Fixture for lathe chuck

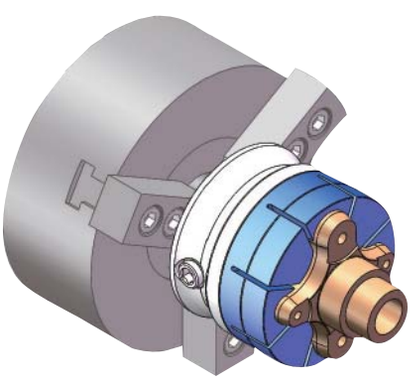

Can hold complex forms which are impossible for a 3 jaw chuck.

Technical information for collets

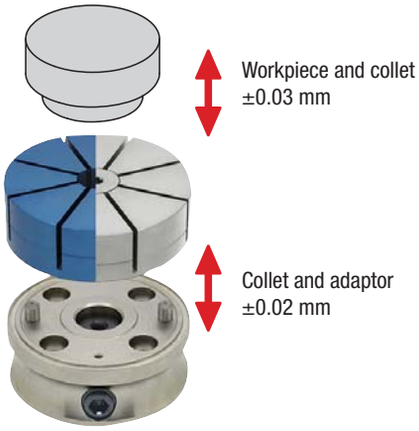

Force effect:

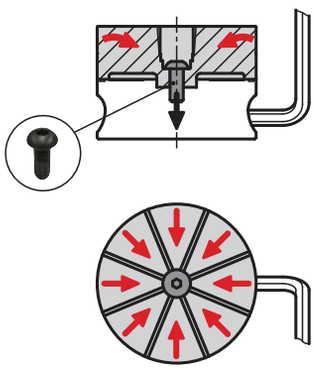

Collet segment travel:
0.3mm in diameter

When the cam cylinder is tightened, the the collet is drawn down.
At the same time the 8 collet segments tilt towards the centre and clamp the workpiece.

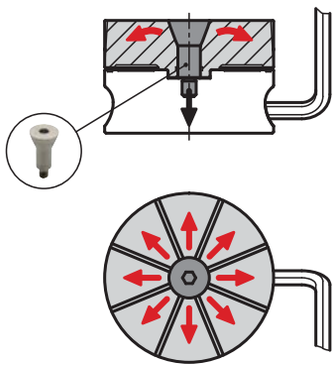

Collet segment travel:
0.3mm in diameter

When the clamping cylinder is tightened, the traction cone is pulled downwards (positive down force).
At the same time, the 8 collet segments tilt outwards from the centre and the workpiece is clamped.

Traction cone

for internal clamping collet

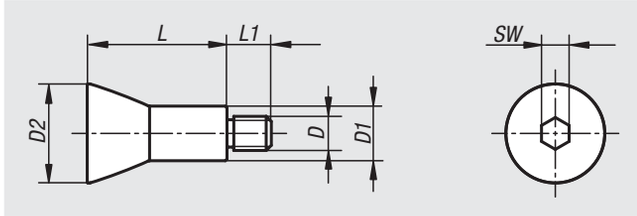

Material:
Carbon steel.

Version:
hardened and nickel-plated.

Sample order:
nlm 03169-0829

Note:
The traction cone is required for the collet for internal clamping.

Order No.	D	D1	D2	L	L1	SW
03169-0829	M8	13,2	22,5	29	10	6
03169-1035	M10	16	27	35	11	8
03169-1041	M10	16	29	41	13	8
03169-1247	M12	18	33	47	14	10

Centring V-plate

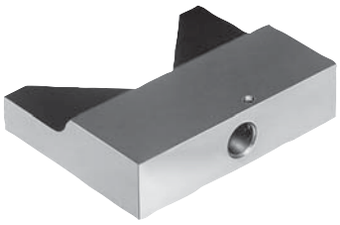

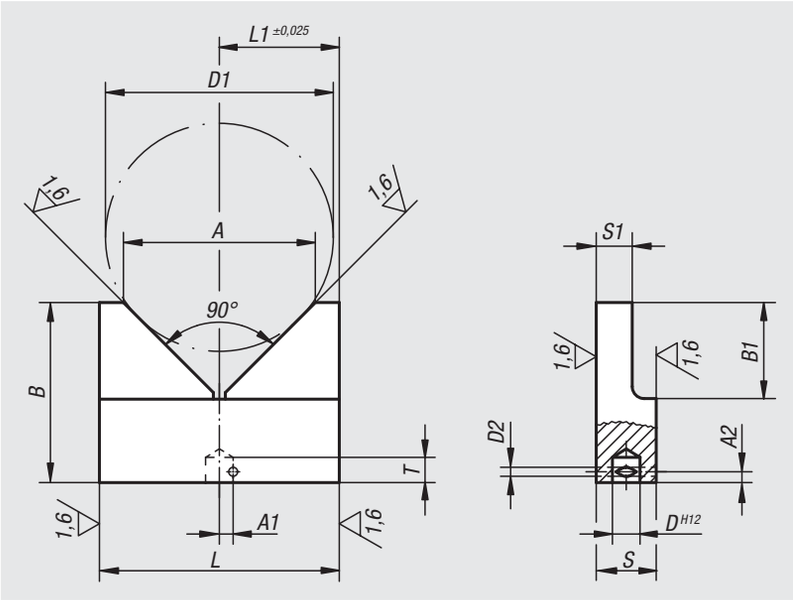

Material:
Carbon steel 1.1181.

Version:
Black oxidised.

Sample order:
nlm 03180-03

Note:
Thrust pad type screws such as 07120 or 06150 may be used for the spindle.

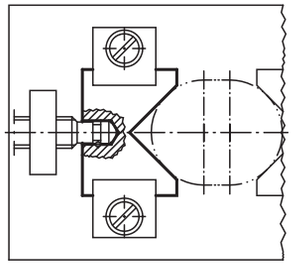

Order No.	L	L1	B	B1	S	S1	D	D1 max.	D2	A	A1	A2	T
03180-01	40	20	30	16	10	6	4,6	38	1,5	32	2,6	1,8	4,2
03180-02	50	25	40	20	12	8	6,1	46	1,5	40	3,7	2	5
03180-03	63	31,5	50	25	16	10	8,1	58	2	50	4,7	2,7	7

03182

Indexing plungers - Precision

with tapered pin

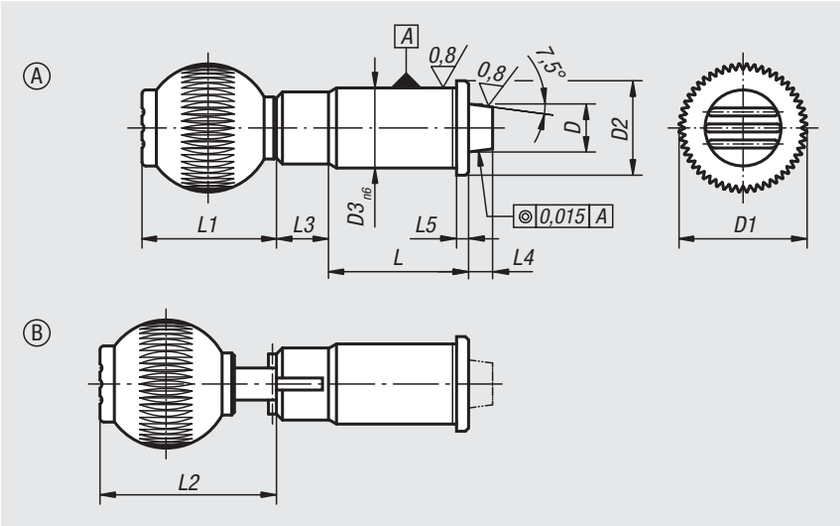

Material:
Steel.
Grip ball thermoplastic.

Version:
Hardened and ground.
Grip ball black grey.

Sample order:
nlm 03182-020

Note:
The indexing plungers with bushes are a perfect combination for rapid positioning and fixing. The precise design of both the indexing plunger and the bush guarantees high repeating accuracy when assembling two elements.

Technical information see assembly and installation instructions.

Drawing reference:
Form A: standard
Form B: lockable

Order No. Form A standard	Order No. Form B lockable	D	D1	D2	D3	L	L1	L2	L3	L4 min.	L5	Spring force initial pressure F1 approx. N	Spring force final pressure F2 approx. N	Internal thread grip ball
03182-010	**03182-110**	10	25	19	16	31	25	-/32,5	13	6	2,5	19	29	M6
03182-012	**03182-112**	12	32	23	20	35	33	-/40,5	13	6	3	22	35	M8
03182-016	**03182-116**	16	40	28	25	42	41,5	-/49	13	6	3	30	50	M10
03182-020	**03182-120**	20	40	33	30	50	41,5	-/49	13	6	3	46	63	M10
03182-025	**03182-125**	25	50	42	38	60	51	-/58,5	13	6	3	39	73	M10

03184

Bushes tapered

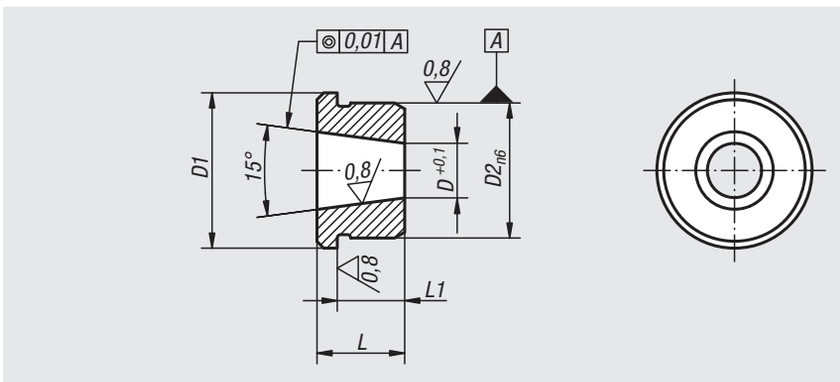

Material:
Steel.

Version:
Hardened and ground.

Sample order:
nlm 03184-20

Note:
Bushes for precision indexing plungers 03182.

Order No.	D	D1	D2	L	L1
03184-10	7,1	19	16	11	8,5
03184-12	8,28	23	20	13	10
03184-16	11,52	28	25	17	14
03184-20	15,49	33	30	16	13
03184-25	19,7	42	38	19	16

03186

Indexing plungers - Precision

with cylindrical pin

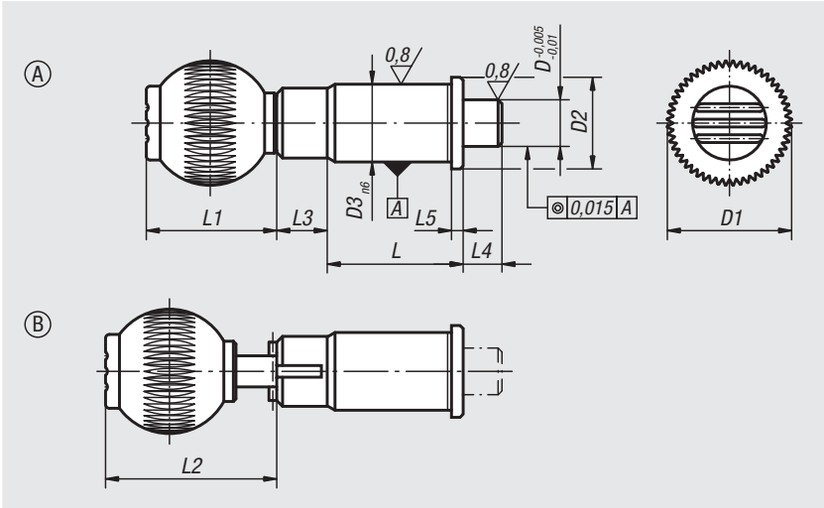

Material:
Steel.
Grip ball thermoplastic.

Version:
Hardened and ground.
Grip ball black grey.

Sample order:
nlm 03186-020

Note:
The indexing plungers with bushes are a perfect combination for rapid positioning and fixing. The precise design of both the indexing plungers and the bush guarantees high repeating accuracy when assembling two elements.

Technical Information see assembly and installation instructions.

Drawing reference:
Form A: standard
Form B: lockable

Order No. Form A standard	Order No. Form B lockable	D	D1	D2	D3	L	L1	L2	L3	L4 min.	L5	Spring force initial pressure F1 approx. N	Spring force final pressure F2 approx. N	Internal thread grip ball
03186-010	**03186-110**	10	25	19	16	31	25	-/36,5	13	10	2,5	15	30	M6
03186-012	**03186-112**	12	32	23	20	35	33	-/44,5	13	10	3	15	35	M8
03186-016	**03186-116**	16	40	28	25	42	41,5	-/53	13	10	3	20	50	M10
03186-020	**03186-120**	20	40	33	30	50	41,5	-/53	13	10	3	36	63	M10
03186-025	**03186-125**	25	50	42	38	60	51	-/62,5	13	10	3	20	73	M10

03188

Bushes cylindrical

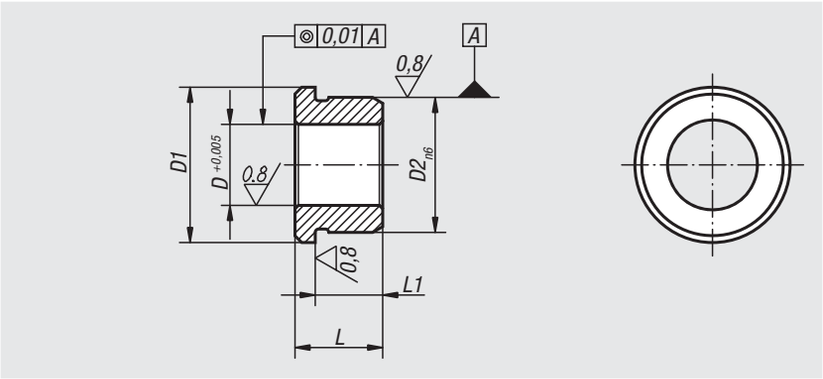

Material:
Steel.

Version:
Hardened and ground.

Sample order:
nlm 03188-20

Note:
Bushes for precision indexing plungers 03186.

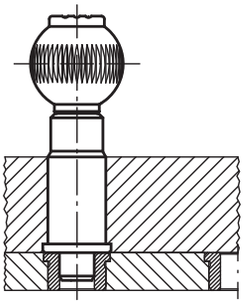

Order No.	D	D1	D2	L	L1
03188-10	10	19	16	11	8,5
03188-12	12	23	20	13	10
03188-16	16	28	25	17	14
03188-20	20	33	30	16	13
03188-25	25	42	38	19	16

Assembly and installation instructions for precision indexing plungers

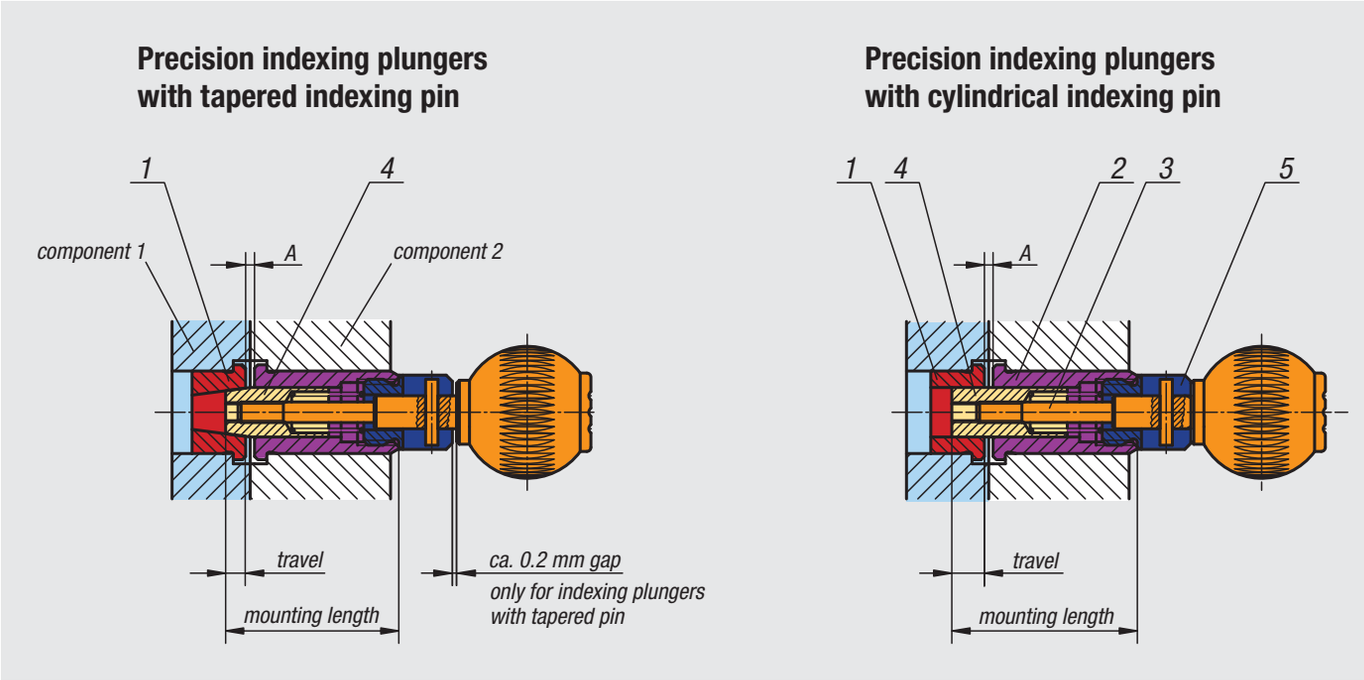

Assembly instructions:

1. Fit tapered or cylindrical bush (Pos. 1) into component 1.
2. Mount sleeve (Pos. 2) into component 2.
3. Determine mounting length (actual dimension). Mounting length = A + travel + length of Pos. 2. Models with tapered pin should have a 0.2 mm gap.
4. Glue screw (Pos. 3) and centring pin (Pos. 4) together grease-free with anaerobic adhesive. We recommend Loctite 638.
5. Screw centring pin with nut (Pos. 4) and handle into the mounted sleeve (Pos. 2). If necessary glue together grease-free with anaerobic adhesive.
6. Check whether the product is operational. Adhere to the index travel length given in the catalogue.

Note:

The precision indexing plunger is only ready for operation after the stated adhesive hardening time. When gluing the components, ensure that no adhesive enters into contact with movable parts.

Indexing plunger

with five lobe grip

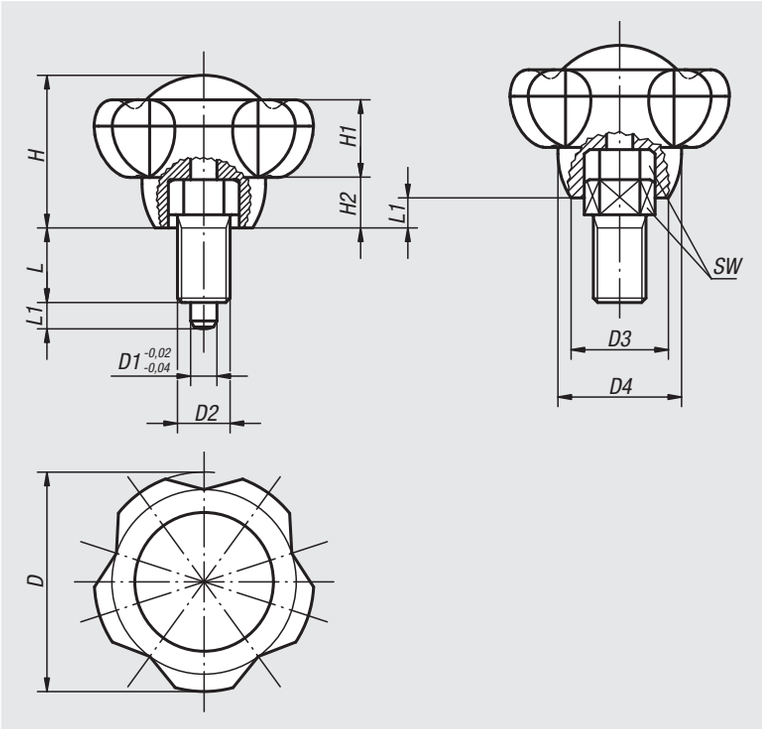

Material:
Thermoplastic.
Indexing pin and screw steel 5.8.

Version:
Grip black grey.
Indexing pin and screw black oxidised.
Indexing pin hardened and ground.

Sample order:
nlm 03190-11056 (cap colour traffic red)

Note:
Δ Add the desired cap colour here. No colour code is required with black grey grip caps.

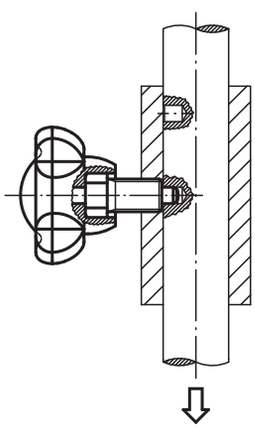

black grey	light grey Δ = 5	traffic red Δ = 6	rape yellow Δ = 7
RAL 7021	RAL 7035	RAL 3020	RAL 1021

Order No.	Size	D	D1	D2	D3	D4	H	H1	H2	L	L1	SW
03190-1105Δ	1	50	5	M10x1	22,2	28,2	34,8	17,8	11,5	13	5	13
03190-1206Δ	2	50	6	M12x1,5	22,2	28,2	34,8	17,8	11,5	17	6	14
03190-13085Δ	3	63	8	M16x1,5	28	35,5	44	22,5	14,5	22	8	19
03190-1410Δ	4	63	10	M20x1,5	28	35,5	44	22,5	14,5	24	10	22

Ball lock pins

self-locking

Material:
Grip and push button thermoplastic.
Metal parts stainless steel.

Version:
Grip black.
Push button traffic red.
Steel parts bright.

Sample order:
nlm 03193-3806050
(include length L e.g. 050 for L = 50 mm)

Note:
Ball lock pins are used for quick and easy fastening and joining of parts and workpieces.
The two balls are disengaged by pressing the push button and the pin can be slipped into holes in the workpieces. Release the button to lock the balls and secure the connection.
Form A is suitable for applications where high demands and precision are required.

Shearing force double shear (F) = S · τ aB max.

Features:
Form A:
Pin ground, metal collar, high axial pull-out force
Form B:
Pin h9, plastic collar, low axial pull-out force

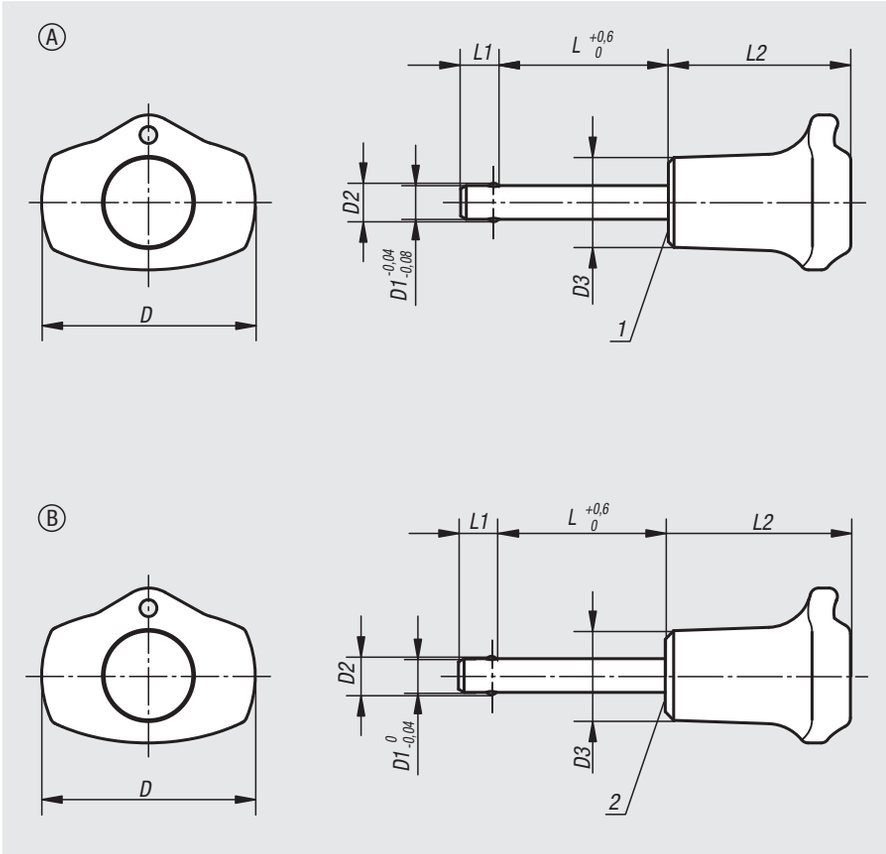

Accessories:
Safety spiral cable 03199-10200
Retaining cable with loop 03199-....
Key ring 03199-15/19/23
Bushing for ball lock pins 03197....

Drawing reference:
1) Metal collar
2) Plastic collar

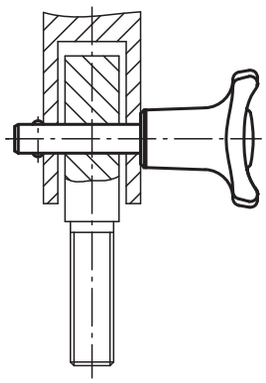

Ball lock pins, self-locking, Form A, metal collar

Order No.	D	D1	D2	D3	L	L1	L2	Receiving hole H11	Shearing force double shear max.kN
03193-3805* **	38	5	5,5	16	10/15/20/25/30	6	32,5	5	15
03193-3806* **	38	6	6,85	16	10/15/20/25/30/35/40/45/50	7	32,5	6	22
03193-3808* **	38	8	9,5	16	20/25/30/35/40/45/50	8	32,5	8	38
03193-4710* **	47	10	12	23	20/25/30/35/40/45/50/60	9	40	10	60
03193-4712* **	47	12	14,5	23	25/30/35/40/45/50/60/70/80	10	40	12	86
03193-4716* **	47	16	19	23	30/35/40/45/50/60/70/80	13	40	16	153

Ball lock pins, self-locking, Form B, plastic collar

Order No.	D	D1	D2	D3	L	L1	L2	Receiving hole H11	Shearing force double shear max.kN
03193-13805* **	38	5	5,5	16	15/20/25/30	5,9	33	5	15
03193-13806* **	38	6	6,85	16	30/40/50	6,8	33	6	22
03193-13808* **	38	8	9,5	16	30/40/50	7,8	33	8	38

Ball lock pins

self-locking, stainless steel

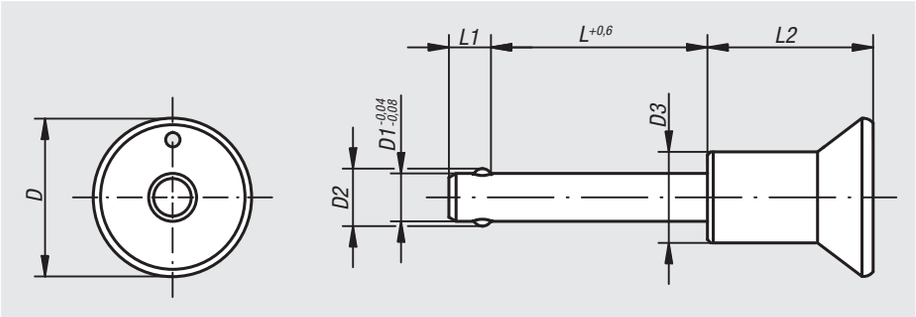

Material:
Metal parts stainless steel.

Version:
Bright.

Sample order:
nlm 03194-3110030
(include length L e.g. 030 for L = 30 mm)

Note:
Ball lock pins are used for quick and easy fastening and joining of parts and workpieces.
The two balls are disengaged by pressing the push button and the pin can be slipped into holes in the workpieces. Release the button to lock the balls and secure the connection.
Corrosion resistant. Option for connecting retaining cable. Application temperature max. +250 °C.

Shearing force double shear (F) = S · τ aB max.

Accessories:
Safety spiral cable: 03199-10200
Retaining cable with loop: 03199-...
Key Ring 03199-15/19/23
Bushing for ball lock pins 03197....

Order No.	D	D1	D2	D3	L	L1	L2	Receiving hole H11	Shearing force double shear max.kN
03194-2305* **	25	5	5,5	14	10/15/20/25/30	6	26,5	5	15
03194-2306* **	25	6	6,85	14	10/15/20/25/30/35/40/45/50	7	26,5	6	22
03194-2308* **	25	8	9,5	14	20/25/30/35/40/45/50	8	26,5	8	38
03194-3110* **	33	10	12	19	20/25/30/35/40/45/50/60	9	34,6	10	60
03194-3112* **	33	12	14,5	19	25/30/35/40/45/50/60/70/80	10	34,6	12	86
03194-3116* **	33	16	19	20	30/35/40/45/50/60/70/80	13,3	34,6	16	153

Locking pins

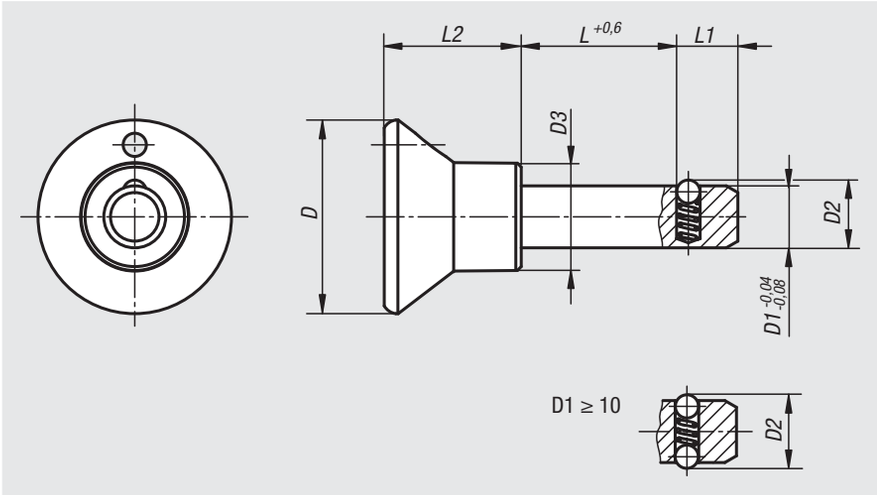

Material:
Grip thermoplastic.
Steel parts stainless steel.

Version:
Grip black.
Steel parts bright.

Sample order:
nlm 03195-2508020
(include length L, e.g. 020 for L = 20 mm)

Note:
Locking pins are used for quick and easy fixating and joining of parts and workpieces.

Shearing force double-shear (F) = S · τ aB max.

Accessories:
Safety spiral cable 03199-10200
Restraining cable with eye 03199-....
Key ring 03199-15/19/23
Bushing for ball lock pins 03197....

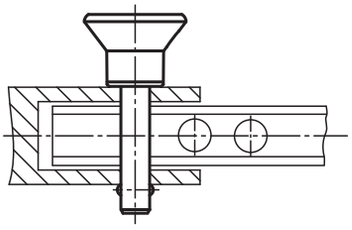

Order No.	D	D1	D2	D3	L	L1	L2	Receiving hole H11	Shearing force double shear max.kN
03195-2506* **	25	6	6,5	14	10/15/20/25/30/40/50	7	17,7	6	22
03195-2508* **	25	8	8,75	14	15/20/25/30/40/50	8	17,7	8	38
03195-3310* **	33	10	12	19	15/20/25/30/40/50	9	24	10	60
03195-3312* **	33	12	14,5	19	20/30/40/50	10	24	12	86

Locking pins with key ring

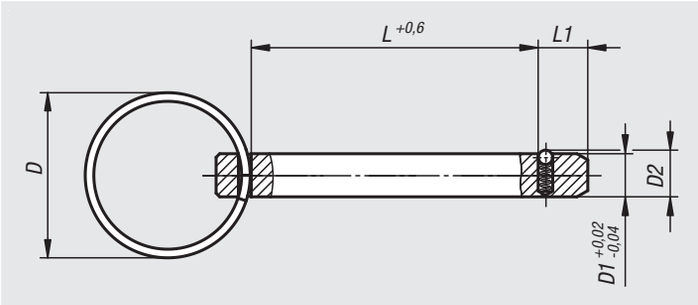

Material:
Pin steel.
Key ring stainless steel.

Version:
Pins galvanized.
Key ring bright.

Sample order:
nlm 03195-102306015

Note:
Locking pins are used for quick and easy fixating and joining of parts and workpieces.

Shearing force double shear (F) = S · τ aB max.

The locking pins with key ring represent a cost-effective alternative to other locking pins.

Order No.	D	D1	D2	L	L1	Shearing force double shear max.kN
03195-102306015	23	6	6,5	15	7	22
03195-102306020	23	6	6,5	20	7	22
03195-102306030	23	6	6,5	30	7	22
03195-102306040	23	6	6,5	40	7	22
03195-102808030	28	8	8,8	30	8	38
03195-102808040	28	8	8,8	40	8	38
03195-102808050	28	8	8,8	50	8	38

Ball lock pins

with T-grip, self-locking

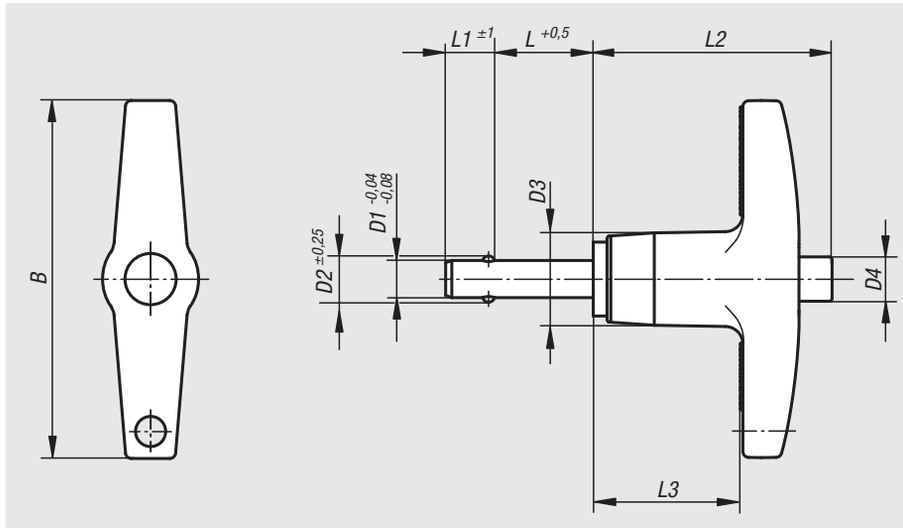

Material:
Pin stainless steel 1.4542.
Grip die-cast aluminium EN-AC 46000.
Push button aluminium EN-AW 2024 T4.
Balls stainless steel 1.4125.
Compression spring stainless steel.

Version:
All stainless steel parts passivated.
Pin hardened to min. 40 HRC.
Grip black anodised.
Push button blue anodised.
Balls hardened to 58 +4 HRC.

Sample order:
nlm 03196-24605030
(include length L e.g. 030 for L = 30 mm)

Note:
Ball lock pins are used for quick and easy fastening and joining of parts and workpieces. The two balls are disengaged by pressing the push button and the pin can be slipped into holes in the workpieces. Release the button to lock the balls and secure the connection. The ball lock pins can be provided with a retaining cable if required.

The hardened, high-tensile stainless steel pin permits extreme loads with low wear.

Shearing force double shear (F) = S · τ aB max.

Accessories:
Safety spiral cable 03199-10200
Retaining cable with loop 03199-....
Key ring 03199-15/19/23/28
Bushing for ball lock pins 03197....

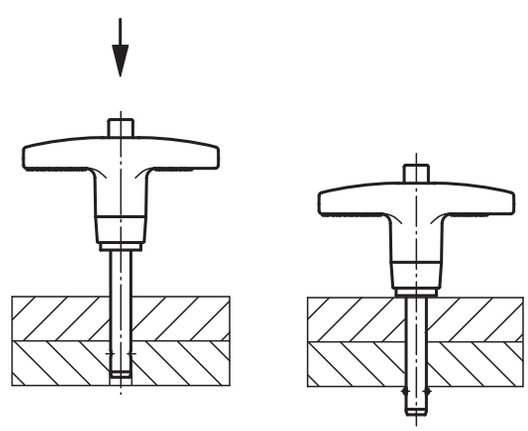

Order No.	B	D1	D2	D3	D4	L	L1	L2	L3	Receiving hole H11	Shearing force double shear max.kN
03196-24605* **	46	5	5,54	11,9	5,8	10/15/20/25/30/35/40/50/60/70	6	30,7	19,3	5	24,4
03196-24606* **	46	6	6,99	11,9	5,8	10/15/20/25/30/35/40/50/60/70/80	7	30,7	19,3	6	35,64
03196-24608* **	46	8	9,42	11,9	5,8	10/15/20/25/30/35/40/50/60/70/80	8	30,7	19,3	8	63,8
03196-25110* **	50,8	10	11,86	14,2	7,4	15/20/25/30/35/40/50/60/70/80/90/100	9	34,8	22,1	10	100,1
03196-25812* **	57,2	12	14,45	18,3	10,7	20/25/30/35/40/50/60/70/80/90/100	10	40,6	25,4	12	144,06
03196-27816* **	78	16	19	23,9	13,7	25/30/35/40/50/60/70/80/90/100	14	45	28,2	16	257,18

Ball lock pins

with L-grip, self-locking

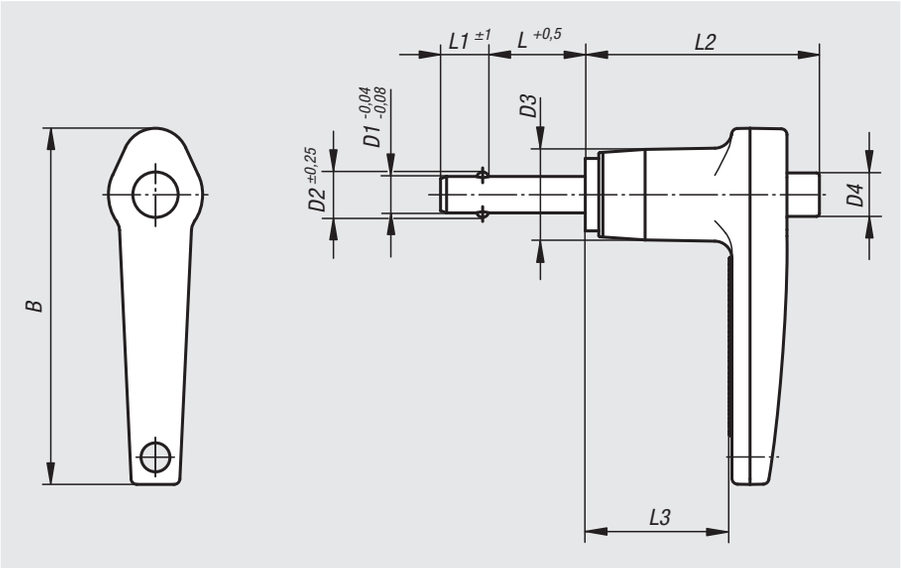

Material:
Pin stainless steel 1.4542.
Grip die-cast aluminium EN-AC 46000.
Push button aluminium EN-AW 2024 T4.
Balls stainless steel 1.4125.
Compression spring stainless steel.

Version:
All stainless steel parts passivated.
Pin hardened to min. 40 HRC.
Grip black anodized.
Push button blue anodized.
Balls hardened to 58 +4 HRC.

Sample order:
nlm 03196-14405030
(include length L e.g. 030 for L = 30 mm)

Note:
Ball lock pins are used for quick and easy fastening and joining of parts and workpieces. The two balls are disengaged by pressing the push button and the pin can be slipped into holes in the workpieces. Release the button to lock the balls and secure the connection. The ball lock pins can be provided with a retaining cable if required.

The hardened, high-tensile stainless steel pin permits extreme loads with low wear.

Shearing force double shear (F) = S · τ aB max.

Accessories:
Safety spiral cable 03199-10200
Retaining cable with loop 03199-....
Key ring 03199-15/19/23
Bushing for ball lock pins 03197....

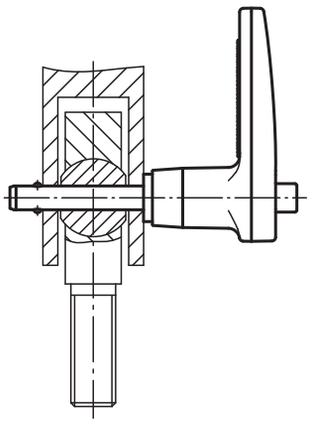

Order No.	B	D1	D2	D3	D4	L	L1	L2	L3	Receiving hole H11	Shearing force double shear max.kN
03196-14405* **	46,7	5	5,54	11,9	5,8	10/15/20/25/30/35/40/50/60/70	6	30,7	19,3	5	24,4
03196-14406* **	46,7	6	6,99	11,9	5,8	10/15/20/25/30/35/40/50/60/70/80	7	30,7	19,3	6	35,64
03196-14408* **	46,7	8	9,42	11,9	5,8	10/15/20/25/30/35/40/50/60/70/80	8	30,7	19,3	8	63,8
03196-15110* **	54,1	10	11,86	14,2	7,4	15/20/25/30/35/40/50/60/70/80/90/100	9	34,8	22,1	10	100,1
03196-15712* **	60,2	12	14,45	18,3	10,7	20/25/30/35/40/50/60/70/80/90/100	10	40,6	25,4	12	144,06
03196-16816* **	68,3	16	19	23,9	13,7	25/30/35/40/50/60/70/80/90/100	14	45	28,2	16	257,18

Bushing for ball lock pins

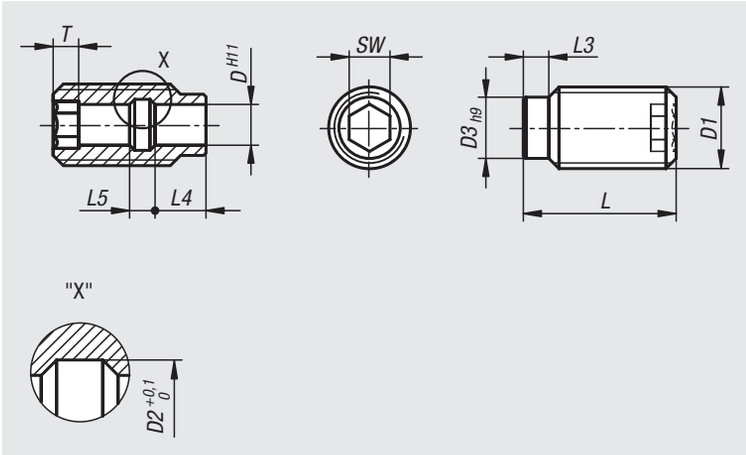

Material:
Stainless steel 1.4305.

Version:
Bright.

Sample order:
nlm 03197-11224

Note:
Bushing for ball lock pins are ideal for the easy and quick positioning of ball lock pins and locking pins.

Advantages:
- centred by the centring collar.
- easy and reliable screwing in.
- can be screwed into various materials.
- usable both sides

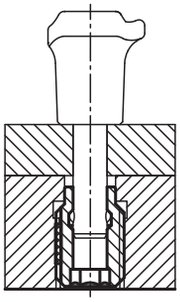

Order No.	D	D1	D2	D3	L	L3	L4	L5	SW	T
03197-10512	5	M12	6	9	25	4	7	3	5	4
03197-10616	6	M16	7,5	12	30	5	10	5	6	5
03197-10816	8	M16	10	12	30	5	10	5	8	5
03197-11024	10	M24	13	18	35	6	8	7	10	6
03197-11224	12	M24	15	18	35	6	8	7	12	6
03197-11630	16	M30	20	24	40	8	11	9	16	7

Bushing for ball lock pins

with LONG-LOK thread lock

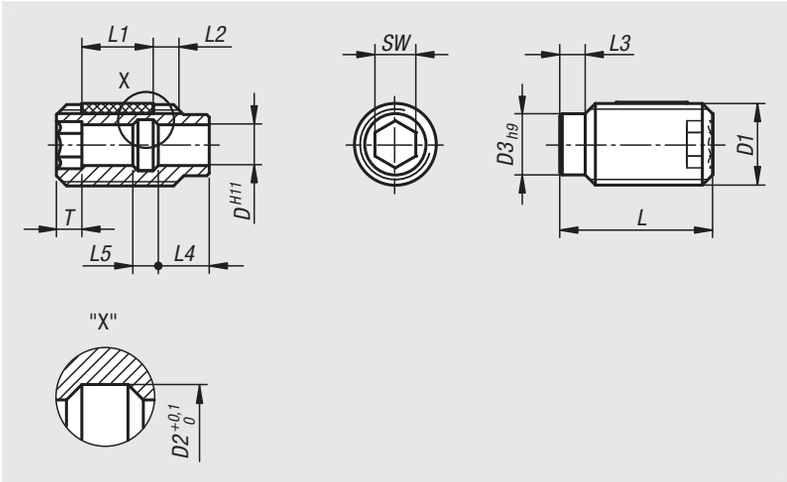

Material:
Stainless steel 1.4305

LONG-LOK thread lock nylon.

Version:
Bright.

Sample order:
nlm 03197-112241

Note:
Bushing for ball lock pins are ideal for the easy and quick positioning of ball lock pins and locking pins.

Advantages:
- centred by the centring collar.
- easy and reliable screwing in.
- can be screwed into various materials.
- usable both sides
- the LONG-LOK thread lock allows the depth to be exactly matched to existing components, no locknut is required.

Drawing reference:
L2 = approx. 2x thread pitch

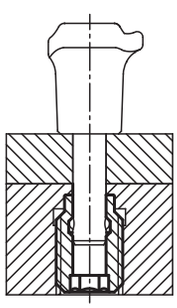

Order No.	D	D1	D2	D3	L	L1	L3	L4	L5	SW	T
03197-105121	5	M12	6	9	25	10	4	7	3	5	4
03197-106161	6	M16	7,5	12	30	14	5	10	5	6	5
03197-108161	8	M16	10	12	30	14	5	10	5	8	5
03197-110241	10	M24	13	18	35	14	6	8	7	10	6
03197-112241	12	M24	15	18	35	14	6	8	7	12	6
03197-116301	16	M30	20	24	40	14	8	11	9	16	7

03198

Safety cable

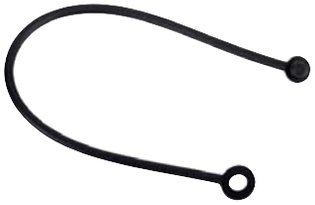

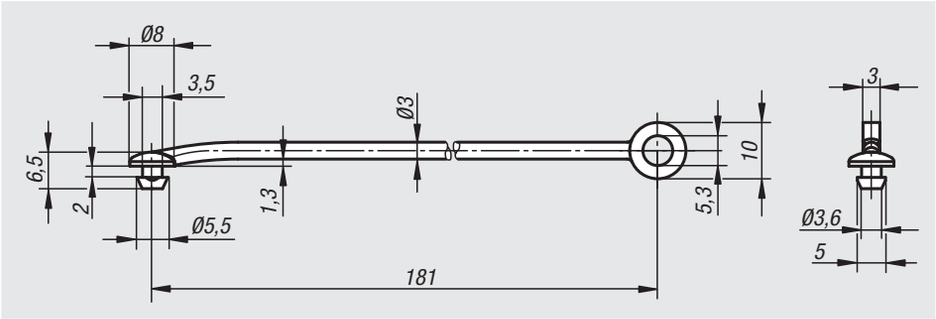

Material:
Thermoplastic urethane TPU.

Sample order:
nlm 03198-04190

Note:
The safety cable is distinguished by its high elongation and good rebound resilience.
Depending on the wall thickness, it can be attached to almost every operating part, fastening element or other objects and so make them unlosable.

It was especially conceived for the star grips 06212, 06220 as an unlosable operating part.

Refitting of existing star grips 06212, 06220 as well as knurled knobs 06266/06267 and knurled knobs 06092 from our assortment is possible with this safety cable.

Assembly:
Recommended hole Ø 3.8 $_{-0.1}$ The hole edge should be deburred.A Teflon based lubrication is recommended to aid assembly.

Order No.	Dimensions
03198-04190	see drawing

03199

Safety spiral cable

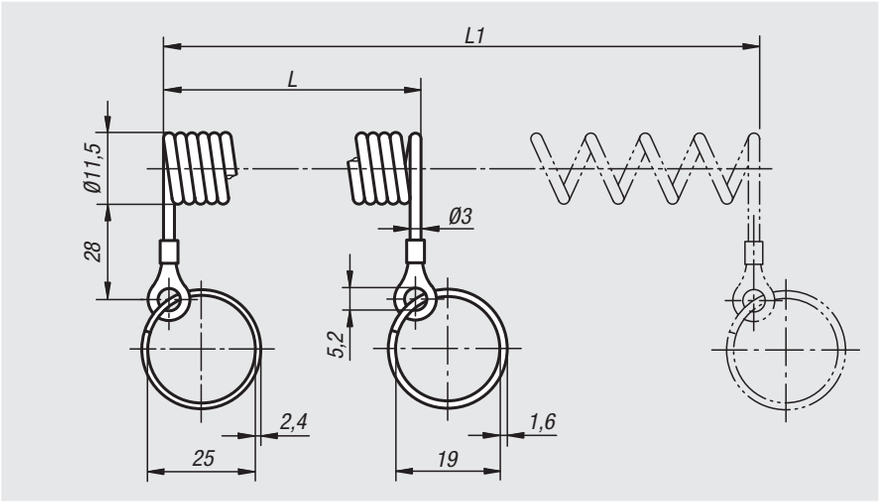

Material:
Spiral cable PUR.
Eye copper or stainless steel.
Key ring steel or stainless steel.

Version:
Spiral cable black.
Eye, brass galvanized - stainless steel bright.
Key ring, steel chromed - stainless steel bright.

Sample order:
nlm 03199-10200

Note:
Elastic spiral cable to secure equipment parts.
Very good reset force, robust and wear-resistant.

Order No.	Component material	L	L1
03199-10100	Steel	100	500
03199-10200	Steel	200	1000
03199-20100	Stainless steel	100	500
03199-20200	Stainless steel	200	1000

Key rings

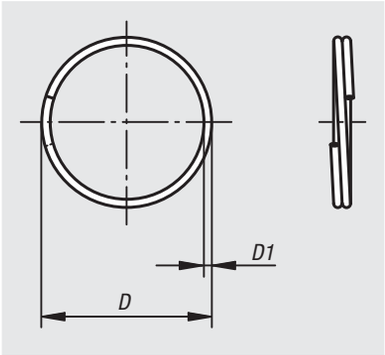

Material:
Stainless steel 1.4310.

Version:
Bright.

Sample order:
nlm 03199-23

Note:
Suitable for spiral cable 03199, ball lock pins 03193, 03194, 03196, locking pins 03195 and indexing plungers 03092, 03096, 03098.

Order No.	D	D1
03199-15	15	1
03199-19	19	1
03199-23	23	1,2
03199-28	28	1,7

Notes

Retaining cables

Material:
Cable stainless steel.
Clamp and crimp terminal aluminium.

Version:
Cable plastic coated.

Sample order:
nlm 03199-0200

Note:
With the retaining cable and pin ring (03199) the ball lock pins (03193, 03194 and 03196) can be secured so that they cannot be lost. An M5 screw is used to secure the retaining cable.
Application temperature: +80 °C.

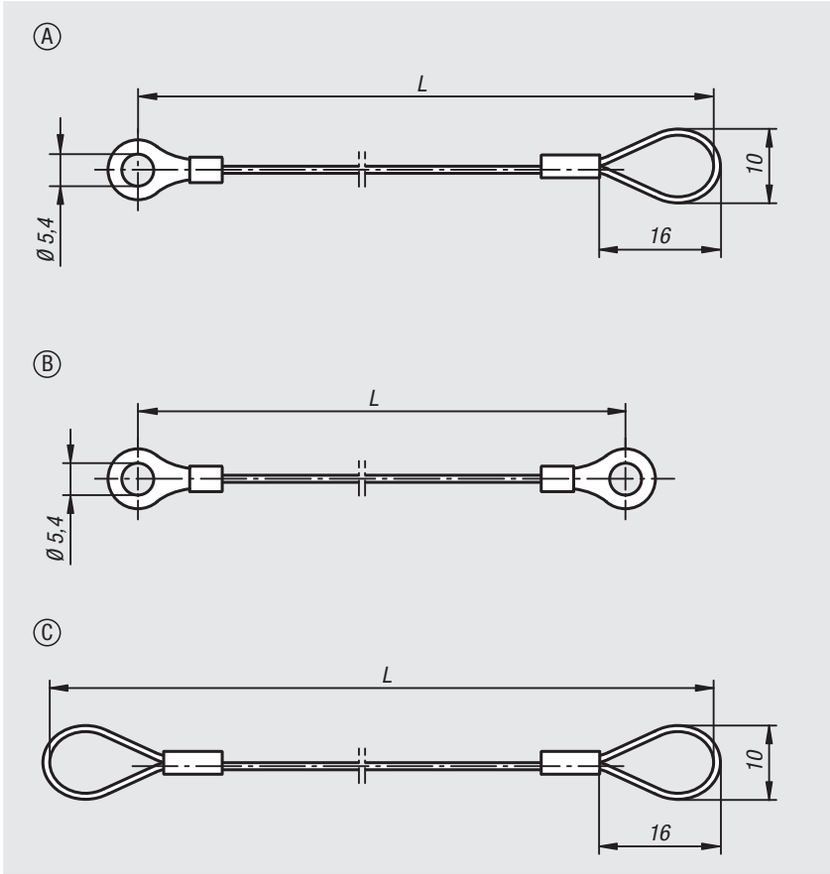

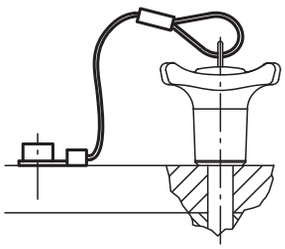

Order No.	Form	L
03199-0150	A	150
03199-0200	A	200
03199-0300	A	300
03199-0500	A	500
03199-1150	B	150
03199-1200	B	200
03199-1300	B	300
03199-1500	B	500
03199-2150	C	150
03199-2200	C	200
03199-2300	C	300
03199-2500	C	500

Parallel blocks pair

DIN 6346

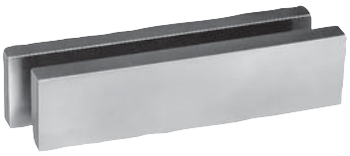

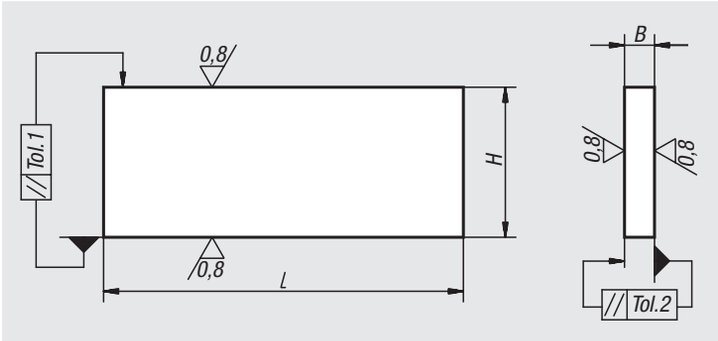

Material:
Steel.

Version:
Hardened and ground, precision grade 1, paired tolerance IT 5, nominal dimensional tolerance DIN ISO 2768-mK

Sample order:
nlm 03200-10

On request:
Several matched pairs.

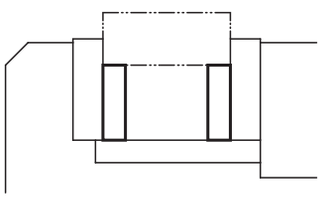

Order No.	H	Tolerance 1	Tolerance DIN ISO 2768-mK	Tolerance per pair IT 5	B	Tolerance 2	Tolerance DIN ISO 2768-mk (2)	Tolerance per pair IT 5 (2)	L
03200-01	8	0,006	±0,2	±0,006	2,5	0,004	±0,1	±0,005	63
03200-02	10	0,006	±0,2	±0,006	3,2	0,005	±0,1	±0,005	63
03200-03	12	0,008	±0,2	±0,008	4	0,005	±0,1	±0,005	63
03200-04	16	0,008	±0,2	±0,008	5	0,005	±0,1	±0,005	63
03200-05	20	0,009	±0,2	±0,009	6,3	0,006	±0,2	±0,006	63
03200-06	12	0,008	±0,2	±0,008	4	0,005	±0,1	±0,005	100
03200-07	16	0,008	±0,2	±0,008	5	0,005	±0,1	±0,005	100
03200-08	20	0,009	±0,2	±0,009	6,3	0,006	±0,2	±0,006	100
03200-09	25	0,009	±0,2	±0,009	8	0,006	±0,2	±0,006	100
03200-10	32	0,011	±0,3	±0,011	10	0,006	±0,2	±0,006	100
03200-11	40	0,011	±0,3	±0,011	12	0,008	±0,2	±0,008	100
03200-12	25	0,009	±0,2	±0,009	8	0,006	±0,2	±0,006	160
03200-13	32	0,011	±0,3	±0,011	10	0,006	±0,2	±0,006	160
03200-14	40	0,011	±0,3	±0,011	12	0,008	±0,2	±0,008	160
03200-15	50	0,011	±0,3	±0,011	16	0,008	±0,2	±0,008	160
03200-16	63	0,013	±0,3	±0,013	20	0,009	±0,2	±0,009	160
03200-17	63	0,013	±0,3	±0,013	20	0,009	±0,2	±0,009	250
03200-18	80	0,013	±0,3	±0,013	25	0,009	±0,2	±0,009	250
03200-19	100	0,015	±0,3	±0,015	32	0,011	±0,3	±0,011	250

03212

Parallel block sets

Material:
Steel.

Version:
Case-hardened and ground.
Paired height tolerance 0.004 mm, nominal dimension height tolerance of ±0.004 mm.
B and L nominal dimension tolerances acc. to DIN ISO 2768-m.

Sample order:
nlm 03212-01

Note:
The parallel block set is supplied in a wooden box with removable lid.

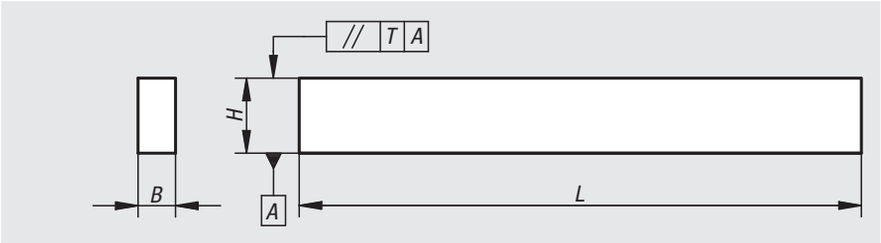

Order No.	Contents 1 pair of each H x B x L	H paired tolerance T	H nom. dim. tolerance
03212-01	14 x 10 x 150	0,004	±0,004
	16 x 10 x 150		
	18 x 10 x 150		
	20 x 10 x 150		
	22 x 10 x 150		
	24 x 10 x 150		
	26 x 10 x 150		
	28 x 10 x 150		
	30 x 10 x 150		
	32 x 10 x 150		
	35 x 10 x 150		
	40 x 10 x 150		
	45 x 10 x 150		
	50 x 10 x 150		

03220

Positioning brackets

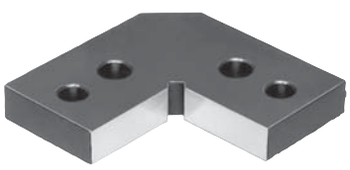

Material:
Carbon steel 1.7225

Version:
nitrided.

Sample order:
nlm 03220-02

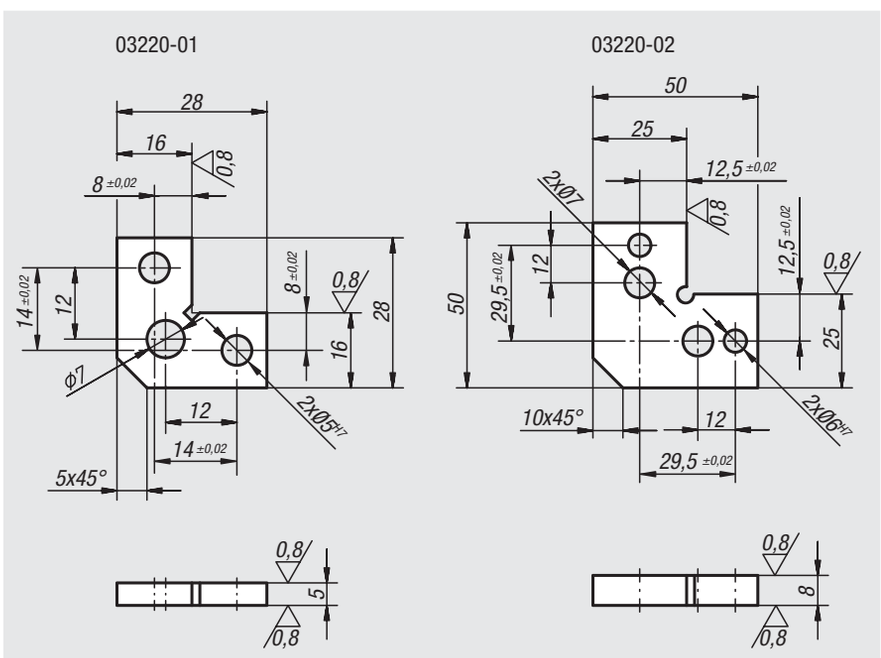

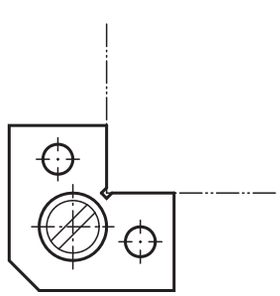

Order No.	Dimensions
03220-01	see drawing
03220-02	see drawing

03240

T-slot keys

Material:
Carbon steel 1.1191

Version:
Black oxidised.

Sample order:
nlm 03240-08X8 (include dimension B1)

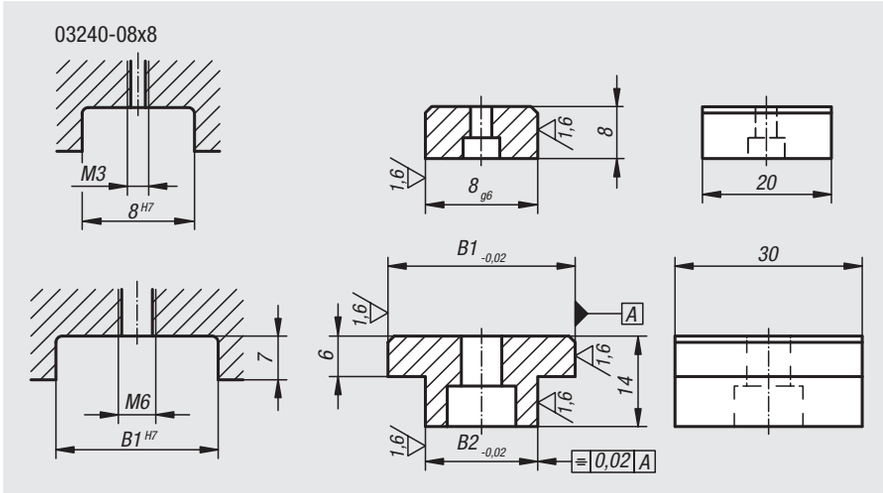

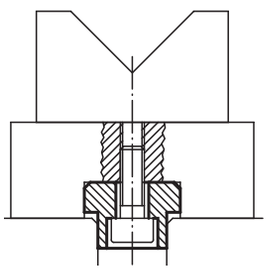

Order No.	B1	B2
03240-08X	8	8
03240-12X	20/22/30	12
03240-14X	20/22/30	14
03240-16X	20/22/30	16
03240-18X	20/22/30	18
03240-22X	20/22/30	22

03250

Slot keys

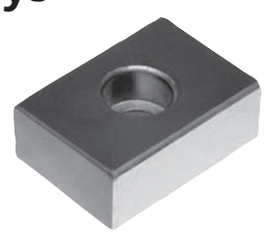

Material:
Steel.

Version:
Case-hardened, black oxidised and ground.

Sample order:
nlm 03250-16

Note:
Slot keys are used to align fixtures and clamps on machine tables with DIN 650 T-slots. They are screwed into the fixture alignment slots. Slot keys are only used when the fixture and machine table have the same slot width.

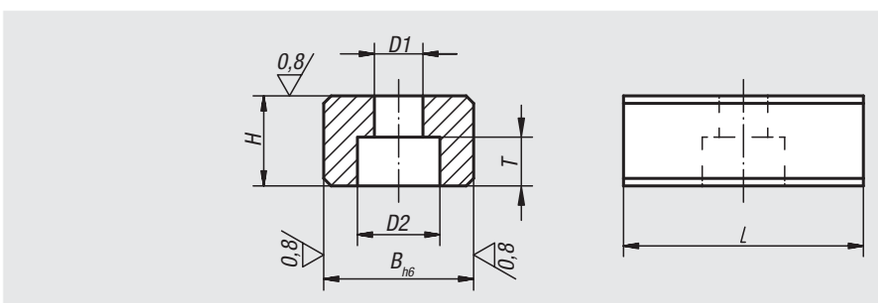

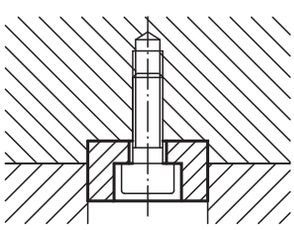

Order No.	B	H	L	D1	D2	T	for screws DIN 84 or 912
03250-10	10	8	20	4,5	8	4,3	M4x10
03250-12	12	8	20	5,5	10	5,3	M5x12
03250-14	14	10	22	6,6	11	6,3	M6x16
03250-16	16	10	22	6,6	11	6,3	M6x16
03250-18	18	10	22	6,6	11	6,3	M6x16
03250-20	20	10	22	6,6	11	6,3	M6x16
03250-22	22	12	32	6,6	11	6,3	M6x16

Elastic slot keys

Pat. No. 4200676

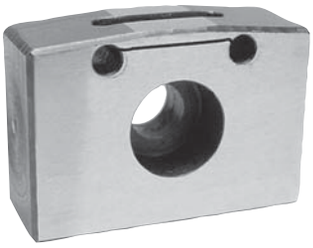

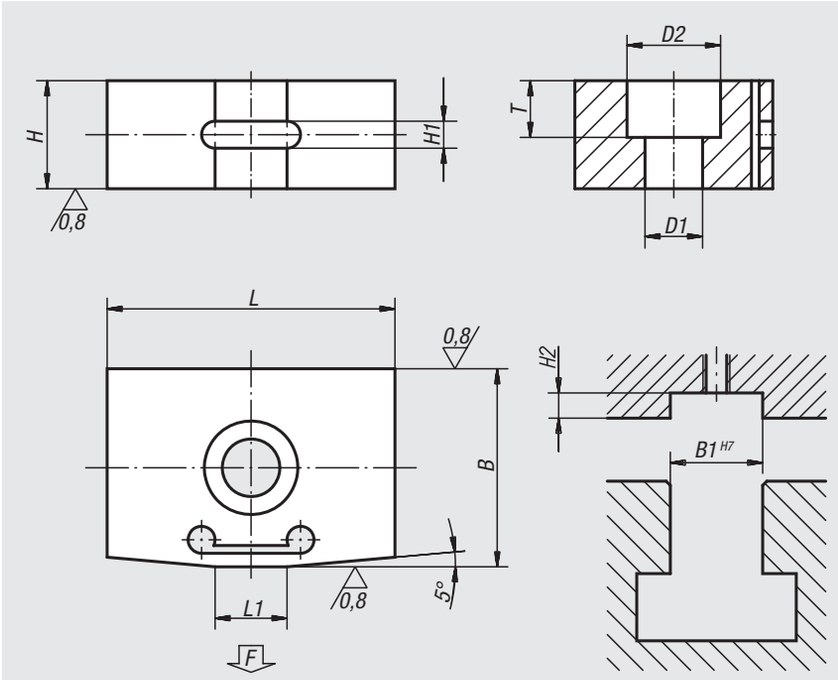

Material:
Steel.

Version:
Case-hardened, black oxidised and ground.

Sample order:
nlm 03252-12

Note:
Elastic slot keys are used to align fixtures and clamps play-free on machine tables with DIN 650 T-slots.

Advantages:
- Play-free seating through elastic deformation.
- The two-part sprung face allows the tolerance play of the guide slots in the machine table and fixture/clamp to be independently equalised.
- Repeat accuracies within 0.005 mm are possible.

Drawing reference:
Independent compensation of two different slot dimensions

Spring surface 1:
Adjusted to the guide slot of the add-on part (fixture/chucking tool).

Spring surface 2:
Adjusted to the guide slot of the supporting table.

elastic deformation produces playfree seating

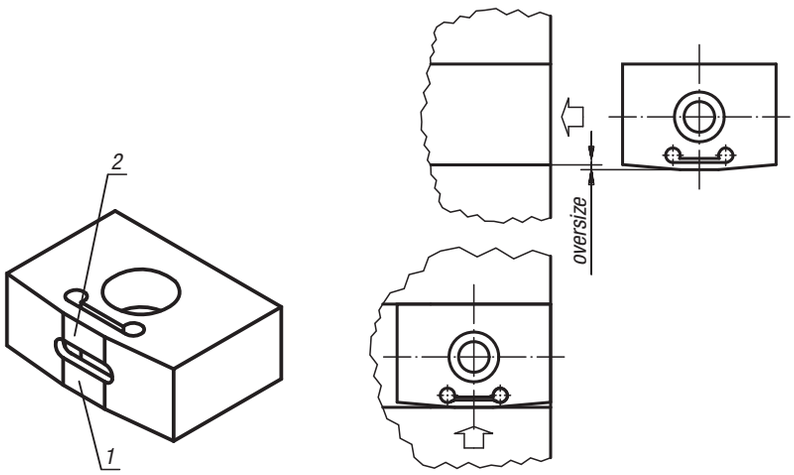

Order No.	B	B1	H	H1	H2	L	L1	D1	D2	T	Approx. spring force at 0,02 spring tension	Approx. spring force at 0,03 spring tension
03252-10	10 +0,035 +0,020	10	8	2	4	20	6	4,3	7,4	4,3	100	200
03252-12	12 +0,038 +0,023	12	8	2	4	20	6	5,3	9,4	5,3	100	200
03252-14	14 +0,038 +0,023	14	10	3	5	22	8	6,4	10,4	6,3	100	200
03252-16	16 +0,038 +0,023	16	10	3	5	22	8	6,4	10,4	6,3	100	200
03252-18	18 +0,038 +0,023	18	10	3	5	22	8	6,4	10,4	6,3	100	200
03252-20	20 +0,040 +0,025	20	10	3	5	22	8	6,4	10,4	6,3	100	200
03252-22	22 +0,040 +0,025	22	12	3	6	32	11	6,4	10,4	6,3	100	200

03260

Slot keys loose

DIN 6323

Material:
Hardened steel 1.0401

Version:
Case-hardened, black oxidised and ground.

Sample order:
nlm 03260-14

Note:
Loose slot keys 03260 acc. to DIN 6323 combine the advantages of fixed slot keys with the improved handling of machine vices, dividing heads and fixtures. These keys can slide sideways after rough alignment.
No protruding key on the base to damage the machine table when moving the fixture.

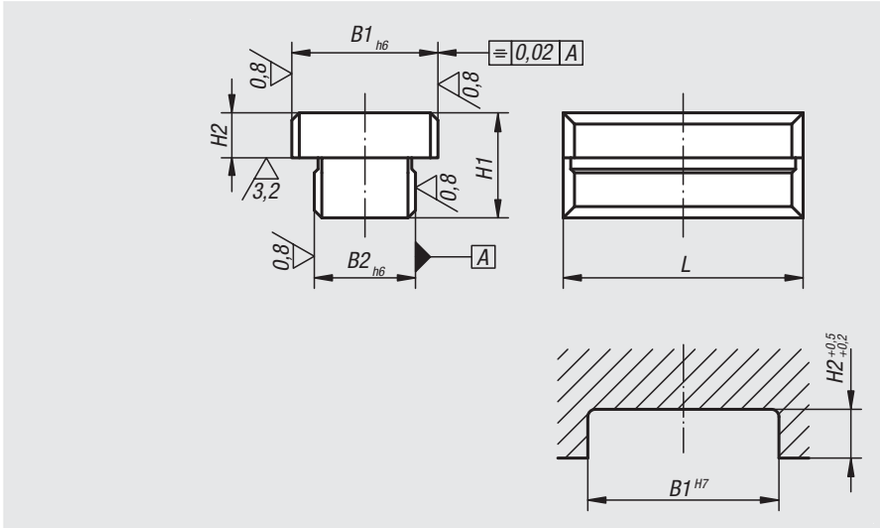

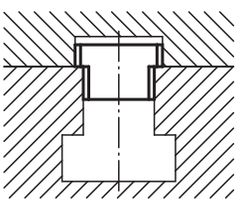

Order No.	B1	B2	H1	H2	L
03260-10	12	10	12	3,6	20
03260-12	20	12	14	5,5	32
03260-14	20	14	14	5,5	32
03260-16	20	16	14	5,5	32
03260-18	20	18	14	5,5	32

03270

Slot keys

with locating pin

Material:
Steel.

Version:
Case-hardened, black oxidised and ground.

Sample order:
nlm 03270-10

Note:
To align fixtures and clamping elements on subplates and palettes with location holes.
They can be mounted in holes or slots.

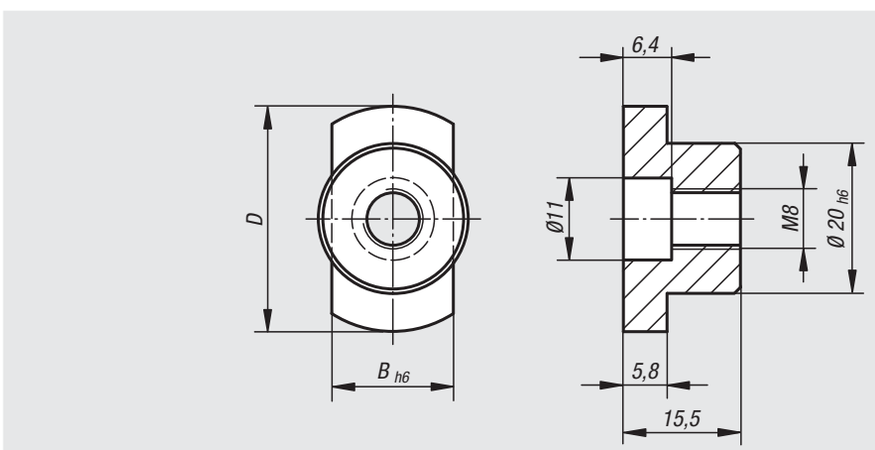

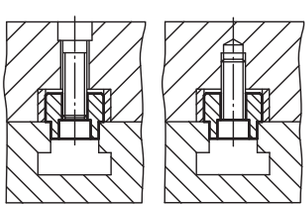

Order No.	B	D
03270-10	10	30
03270-12	12	30
03270-14	14	30
03270-16	16	30
03270-18	18	30
03270-20	20	36
03270-22	22	40

Parallel keys

DIN 6885 A

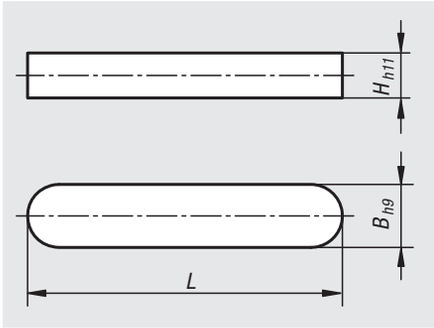

Material:
Steel 1.1192 or stainless steel 1.4571

Version:
Bright.

Sample order:
nlm 03288-04X12 (include length L)

Application example:

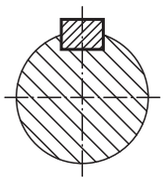

Order No.	Main material	B	H	L = length
03288-03X	steel	3	3	8/10/12/14/16/18/20/22/25/28
03288-04X	steel	4	4	8/10/12/14/16/18/20/22/25/28
03288-05X	steel	5	5	12/14/16/18/20/22/25/28/32/36/40
03288-06X	steel	6	6	12/14/16/18/20/22/25/28/32/36/40/45
03288-08X	steel	8	7	14/16/18/20/22/25/28/32/36/40/45/50/70
03288-10X	steel	10	8	22/25/28/32/36/40/45/50/56/70/80
03288-12X	steel	12	8	25/28/32/36/40/45/50/56/70/80
03288-14X	steel	14	9	25/28/32/36/40/45/50/56/70/80
03288-16X	steel	16	10	50/56/63/70/80/90/100
03288-103X	stainless steel	3	3	10/12/16/20
03288-104X	stainless steel	4	4	10/12/14/16/18/20/22
03288-105X	stainless steel	5	5	12/14/16/18/20/22/25/28/36/40
03288-106X	stainless steel	6	6	12/14/16/18/20/22/25/28/32/36/40
03288-108X	stainless steel	8	7	16/18/20/22/25/28/32/36/40/45/50/70
03288-110X	stainless steel	10	8	22/25/28/32/36/40/45/50/56/70/80
03288-112X	stainless steel	12	8	28/32/36/40/45/50/56/70/80
03288-114X	stainless steel	14	9	32/40/45/50/56/70/80
03288-116X	stainless steel	16	10	50/63/70/80/90/100

Woodruff keys

DIN 6888

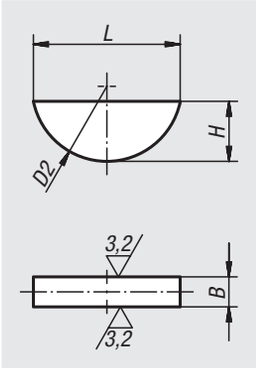

Material:
Steel 1.1192

Version:
Bright.

Sample order:
nlm 03289-04X65
(Include dimension H, e.g. 65 for H = 6.5 mm)

On request:
Stainless steel woodruff keys 1.4571.

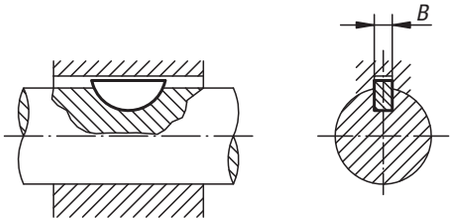

Order No.	B	H	L	D2
03289-02X5	2	5	12,6	13
03289-03X5	3	5	12,6	13
03289-03X65	3	6,5	15,7	16
03289-04X5	4	5	12,6	13
03289-04X65	4	6,5	15,7	16
03289-04X75	4	7,5	18,6	19
03289-05X65	5	6,5	15,7	16
03289-05X75	5	7,5	18,6	19
03289-05X9	5	9	21,6	22
03289-06X9	6	9	21,6	22
03289-06X10	6	10	24,5	25
03289-06X11	6	11	27,3	28
03289-08X11	8	11	27,3	28
03289-08X13	8	13	31,4	32
03289-10X13	10	13	31,4	32
03289-10X16	10	16	43,1	45

Carrier keys

DIN 2079

Material:
Steel.

Version:
Case-hardened, black oxidised and ground.

Sample order:
nlm 03290-04

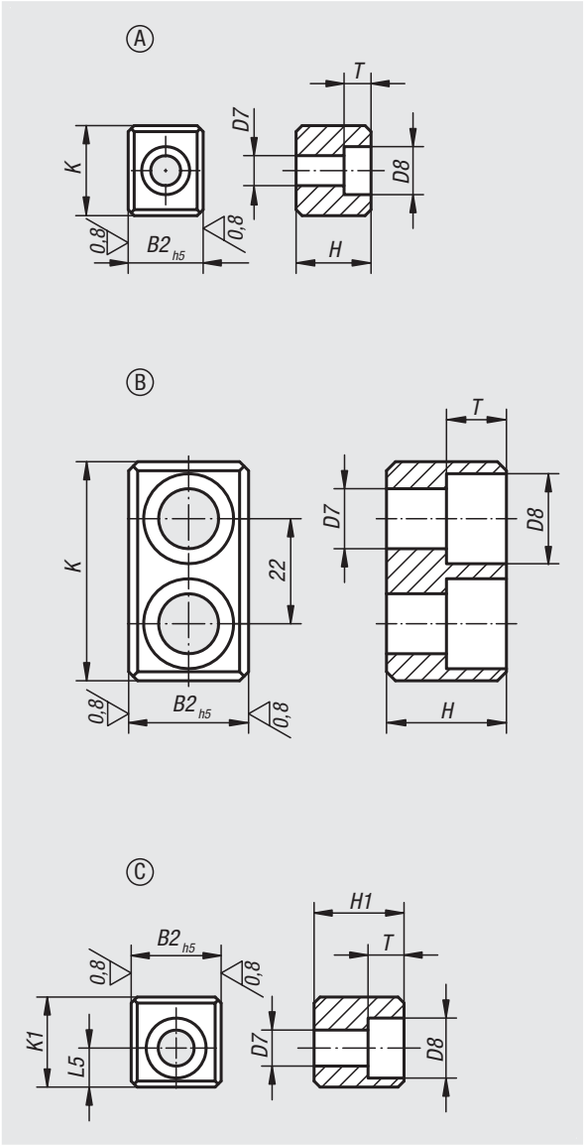

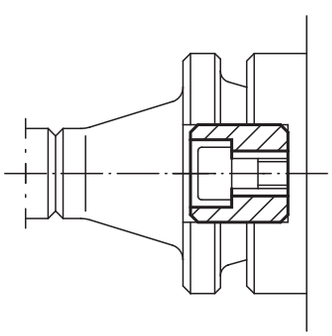

Order No. Form A	Order No. Form B	Order No. Form C	for spindle head No.	K	K1	B2	D7	D8	H	H1	T	L5
03290-01	-	**03290-013**	30	16,5	13,5	15,9	6,4	10,4	16	24,5	6,2	5,5
03290-02	-	**03290-023**	40	19,5	16,5	15,9	6,4	10,4	16	24,5	6,2	7
03290-03	-	**03290-033**	45	19,5	17,5	19	8,4	13,5	19	26	8,3	7,5
03290-04	-	**03290-043**	50-55	26,5	24	25,4	13	19	25	29	12,3	11
03290-05	**03290-06**	-	60	45,5	-	25,4	13	19	25	-	12,3	-

Roll dowel

heavy duty ISO 8752

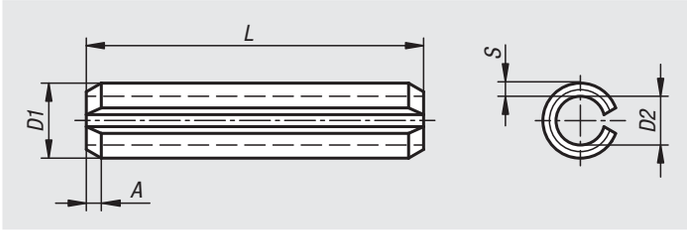

Material:
Spring steel or stainless steel 1.4310.

Version:
Bright.

Sample order:
nlm 03315-010X4 (include length L)

Note:
The nominal diameter of the pin is the same as the receiving hole diameter. The recommended hole tolerance is ISO H12.

Due to the chamfered end, the pins can be inserted easily into the hole with a hammer or using automatic placement. After insertion, the plus tolerance of the pins results in a vibration-proof seating.

The pins can be easily removed using a mandrel and reused several times.

The pins can transmit high shear forces and are resistant to shocks and impacts due to their spring properties.

The values specified for the shear force only apply to spring steel.

Order No.	Main material	D1	L	D1 max.	D2	A	S	Shearing force double shear max.kN
03315-010X	steel	1	4/5/6/8/10/12	1,3	0,8	0,15	0,2	0,7
03315-015X	steel	1,5	5/6/8/10/12/14/16/18/20	1,8	1,1	0,25	0,3	1,58
03315-020X	steel	2	5/6/8/10/12/14/16/18/20/22/24/26/28/30	2,4	1,5	0,35	0,4	2,82
03315-025X	steel	2,5	5/6/8/10/12/14/16/18/20/22/24/26/28/30	2,9	1,8	0,4	0,5	4,38
03315-030X	steel	3	5/6/8/10/12/14/16/18/20/22/24/26/28/30/32/36/40	3,5	2,1	0,5	0,6	6,32
03315-035X	steel	3,5	6/8/10/12/14/16/18/20/22/24/26/28/30/32/36/40	4	2,3	0,6	0,75	9,06
03315-040X	steel	4	6/8/10/12/14/16/18/20/22/24/26/28/30/32/36/40/45/50	4,6	2,8	0,65	0,8	11,24
03315-050X	steel	5	6/8/10/12/14/16/18/20/22/24/26/28/30/32/36/40/45/50/60/70	5,6	3,4	0,9	1	17,54
03315-060X	steel	6	10/12/14/16/18/20/22/24/26/28/30/32/36/40/45/50/60/70/80	6,7	4	1,2	1,2	26,04
03315-080X	steel	8	10/12/14/16/18/20/22/24/26/28/30/32/36/40/45/50/60/70/80	8,8	5,5	2	1,5	42,76
03315-100X	steel	10	10/14/16/18/20/22/24/26/28/30/32/36/40/45/50/60/70/80/90/100	10,8	6,5	2	2	70,16
03315-120X	steel	12	20/22/24/26/28/30/32/36/40/45/50/60/70/80/90/100	12,8	7,5	2	2,5	104,1

Order No.	Main material	D1	L	D1 max.	D2	A	S
03315-1010X	stainless steel	1	4/5/6/8/10/12	1,3	0,8	0,15	0,2
03315-1015X	stainless steel	1,5	5/6/8/10/12/14/16/18/20	1,8	1,1	0,25	0,3
03315-1020X	stainless steel	2	5/6/8/10/12/14/16/18/20/22/24/26/28/30	2,4	1,5	0,35	0,4
03315-1025X	stainless steel	2,5	5/6/8/10/12/14/16/18/20/22/24/26/28/30	2,9	1,8	0,4	0,5
03315-1030X	stainless steel	3	5/6/8/10/12/14/16/18/20/22/24/26/28/30/32/36/40	3,5	2,1	0,5	0,6
03315-1035X	stainless steel	3,5	6/10/12/14/16/18/22/24/26/28/30/32/36/40	4	2,3	0,6	0,75
03315-1040X	stainless steel	4	6/8/10/12/14/16/18/20/22/24/26/28/30/32/36/40/45/50	4,6	2,8	0,65	0,8
03315-1050X	stainless steel	5	6/8/10/12/14/16/18/20/22/24/26/28/30/32/36/40/45/50/60/70	5,6	3,4	0,9	1
03315-1060X	stainless steel	6	10/12/14/16/18/20/22/24/26/28/30/32/36/40/45/50/60/70/80	6,7	4	1,2	1,2
03315-1080X	stainless steel	8	10/12/14/16/18/20/22/24/26/28/30/32/36/40/45/50/60/70/80	8,8	5,5	2	1,5
03315-1100X	stainless steel	10	10/12/14/16/18/20/22/24/28/30/32/36/40/45/50/60/70/80/90/100	10,8	6,5	2	2

03320

Cylindrical pins

DIN 6325

Material:
Tool steel 1.2067

Version:
Hardened; hardness 550 – 650 HV 30, ground

Sample order:
nlm 03320-06X28 (include length L1)

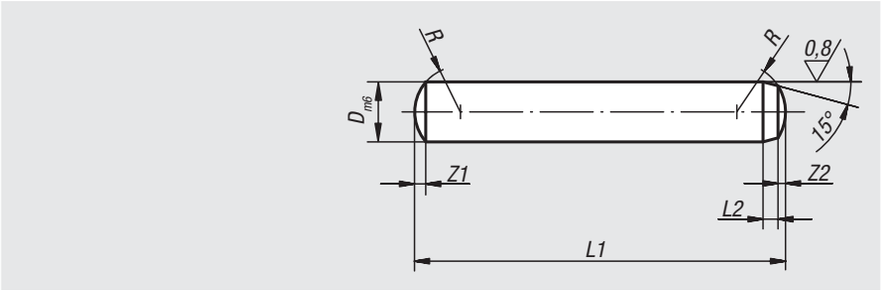

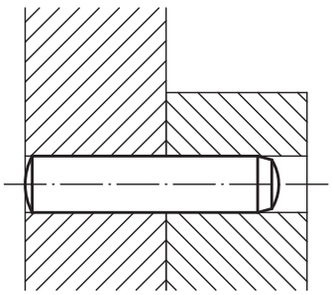

Order No.	D	L1 = length	L2	R	Z1	Z2
03320-02X	2	6/8/10/12/14/16/18/20	0,6	2	0,3	0,18
03320-25X	2,5	6/8/10/12/14/16/18/20/22/24	0,7	2,5	0,4	0,25
03320-03X	3	8/10/12/14/16/18/20/22/24/28/30/32	0,8	3	0,45	0,3
03320-04X	4	8/10/12/14/16/18/20/22/24/28/30/32/36/40	1	4	0,6	0,4
03320-05X	5	10/12/14/16/18/20/22/24/28/30/32/36/40/45/50	1,2	5	0,75	0,5
03320-06X	6	10/12/14/16/18/20/22/24/28/30/32/36/40/45/50/55/60	1,5	6	0,9	0,6
03320-08X	8	12/14/16/18/20/22/24/28/30/32/36/40/45/50/55/60/70/80	1,8	8	1,2	0,8
03320-10X	10	16/18/20/24/28/30/32/36/40/45/50/55/60/70/80/90/100	2	10	1,5	1
03320-12X	12	18/20/24/28/30/32/36/40/45/50/55/60/70/80/90/100/120	2,5	12	1,8	1,3
03320-14X	14	24/28/32/36/40/45/50/55/60/70/80/90/100/120	2,5	16	2	1,3
03320-16X	16	24/28/32/36/40/45/50/55/60/70/80/90/100/110/120	3	16	2,5	1,7

03325

Cylindrical pins with internal thread

DIN 7979

Material:
Tool steel 1.2067

Version:
Surface-hardened;
hardness 60 ±2 HRC, tempered, ground and lapped

Sample order:
nlm 03325-06X28 (include length L)

Note:
Tapped cylindrical pins are chiefly used in blind holes. The milled flat prevents air compression in blind holes. The tapping makes it possible to use the extractor 03328.

Drawing reference:
1) milled flat

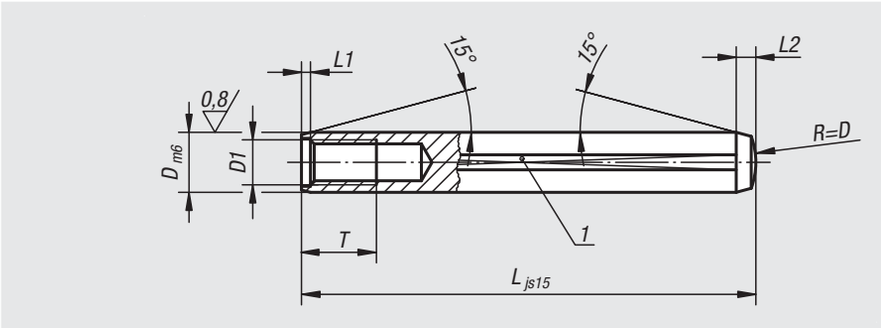

Order No.	D	L	D1	T	L1 ca.	L2 ca.
03325-05X	5	16/20/24/28/32/36/40/45	M3	6	0,6	1,7
03325-06X	6	16/18/20/24/28/32/36/40/45/50/55/60	M4	6	0,8	2,1
03325-08X	8	20/24/28/32/36/40/45/50/55/60/70/80/90/100	M5	8	1	2,6
03325-10X	10	20/24/28/32/36/40/45/50/55/60/70/80/90/100	M6	10	1,2	3
03325-12X	12	32/36/40/45/50/55/60/70/80/90/100/120	M6	10	1,6	3,8
03325-14X	14	32/36/40/45/50/55/60/70/80/90/100/120	M8	12	1,8	4
03325-16X	16	40/45/50/55/60/70/80/90/100/120	M8	12	2	4,7
03325-20X	20	45/50/55/60/70/80/90/100/120	M10	16	2,5	6

Centring rings

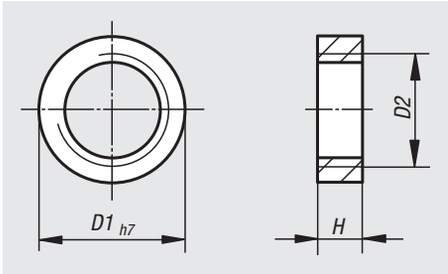

Material:
Stainless steel 1.4301.

Sample order:
nlm 20240-0705

Note:
Centring rings are for joining precisely or mounting modules indirectly by adapter plates.
The internal thread is for removing the centring rings.

Order No.	D1	D2	H
20240-0705	7	M5	3
20240-1008	10	M8	4
20240-1310	13	M10	4

Extractor

Material:
Hammer head carbon steel.
Shaft, stop and guide sleeves tool steel.

Version:
Slide hammer tempered and chromed.
Shaft, stop and guide sleeve hardened and chromed.

Sample order:
nlm 03328-40

Note:
These extractors are used to remove locating pins and centring pins (03105, 03106, 03107, 03108, 03325) with M3 - M8 tapped holes.

Drawing reference:
1) stop
2) slide hammer
3) shaft
4) cross pin
5) lock screw
6) guide sleeve
7) cap screw
8) 1 set guide sleeves

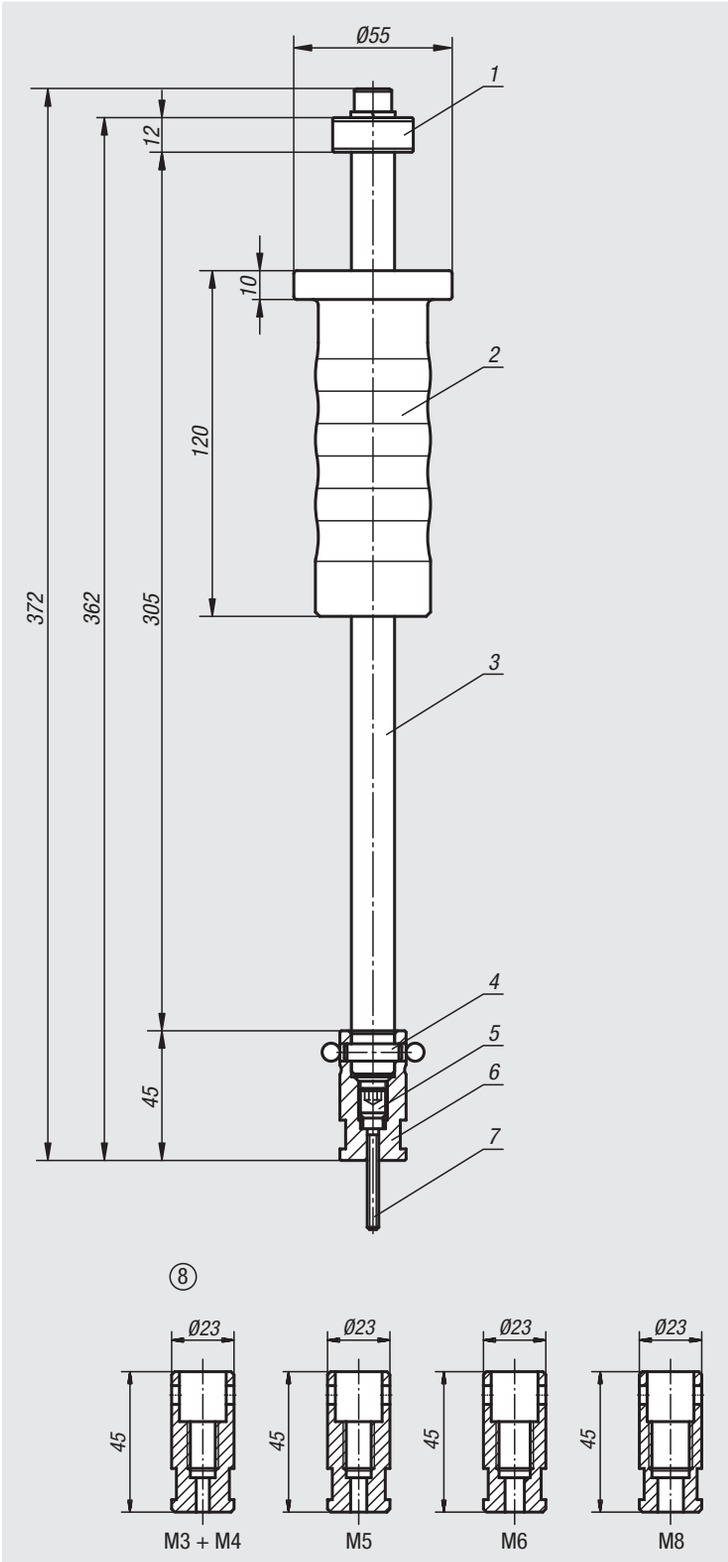

Order No.	Dimensions
03328-40	see drawing

Lateral spring plungers

Material:
Sleeve aluminium.
Spring steel.
Thrust pin steel or POM.

Version:
Thrust pin (steel) hardened and galvanized.
Sleeve blue galvanized.

Sample order:
nlm 03330-72064

Note:
Lateral spring plungers are for positioning, clamping, holding and fastening of workpieces during engraving, labelling, drilling, reaming, tapping, honing, grinding, welding, soldering, tooling, assembling, etc.
Eccentric adjustment bushes see 03330.

W and Z are customer specific.

Drawing reference:
1) assembly tool

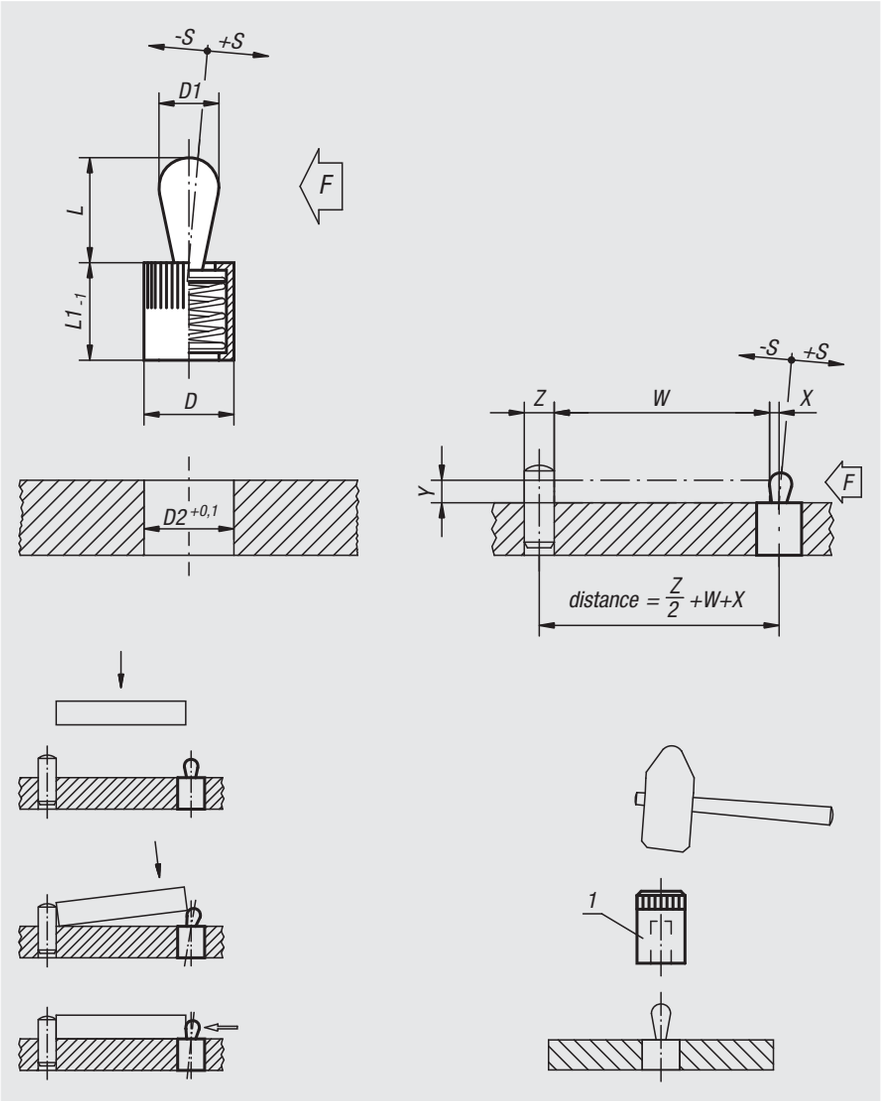

Lateral spring plungers without seal, thrust pin and spring steel

Order No.	D	D1	L	L1	D2	±S	F ca.N	X if Y = 1	X if Y = 2	X if Y = 3	X if Y = 4.5	X if Y = 6	X if Y = 8	Order No. assembly tool
03330-21034	6	3	4	7	6	0,5	10	0,8	1	1	1	1	1	03330-03
03330-21036	6	3	4	7	6	0,5	20	0,8	1	1	1	1	1	03330-03
03330-21038	6	3	4	7	6	0,5	40	0,8	1	1	1	1	1	03330-03
03330-21054	10	5	6,7	11	10	0,8	20	-	1,5	1,7	1,7	1,7	1,7	03330-05
03330-21056	10	5	6,7	11	10	0,8	50	-	1,5	1,7	1,7	1,7	1,7	03330-05
03330-21058	10	5	6,7	11	10	0,8	100	-	1,5	1,7	1,7	1,7	1,7	03330-05
03330-21064	10	6	10,7	11	10	1	40	-	-	-	1,7	1,9	1,9	03330-05
03330-21066	10	6	10,7	11	10	1	75	-	-	-	1,7	1,9	1,9	03330-05
03330-21068	10	6	10,7	11	10	1	100	-	-	-	1,7	1,9	1,9	03330-05
03330-21084	12	8	13,9	13	12	1,3	50	-	-	-	-	2,5	2,7	03330-08
03330-21086	12	8	13,9	13	12	1,3	100	-	-	-	-	2,5	2,7	03330-08
03330-21088	12	8	13,9	13	12	1,3	150	-	-	-	-	2,5	2,7	03330-08
03330-21104	16	10	16,7	17	16	1,6	100	-	-	-	-	-	3,1	03330-10
03330-21106	16	10	16,7	17	16	1,6	150	-	-	-	-	-	3,1	03330-10
03330-21108	16	10	16,7	17	16	1,6	200	-	-	-	-	-	3,1	03330-10

Lateral spring plungers

Lateral spring plungers with seal, thrust pin and spring steel

Order No.	D	D1	L	L1	D2	±S	F ca.N	X if Y = 1	X if Y = 2	X if Y = 3	X if Y = 4.5	X if Y = 6	X if Y = 8	Order No. assembly tool
03330-22034	6	3	4	7	6	0,5	10	0,8	1	1	1	1	1	03330-03
03330-22036	6	3	4	7	6	0,5	20	0,8	1	1	1	1	1	03330-03
03330-22038	6	3	4	7	6	0,5	40	0,8	1	1	1	1	1	03330-03
03330-22054	10	5	6	12	10	0,8	20	-	1,5	1,7	1,7	1,7	1,7	03330-05
03330-22056	10	5	6	12	10	0,8	50	-	1,5	1,7	1,7	1,7	1,7	03330-05
03330-22058	10	5	6	12	10	0,8	100	-	1,5	1,7	1,7	1,7	1,7	03330-05
03330-22064	10	6	10	12	10	1	40	-	-	-	1,7	1,9	1,9	03330-05
03330-22066	10	6	10	12	10	1	75	-	-	-	1,7	1,9	1,9	03330-05
03330-22068	10	6	10	12	10	1	100	-	-	-	1,7	1,9	1,9	03330-05
03330-22084	12	8	13	14	12	1,3	50	-	-	-	-	2,5	2,7	03330-08
03330-22086	12	8	13	14	12	1,3	100	-	-	-	-	2,5	2,7	03330-08
03330-22088	12	8	13	14	12	1,3	150	-	-	-	-	2,5	2,7	03330-08
03330-22104	16	10	16	18	16	1,6	100	-	-	-	-	-	3,1	03330-10
03330-22106	16	10	16	18	16	1,6	150	-	-	-	-	-	3,1	03330-10
03330-22108	16	10	16	18	16	1,6	200	-	-	-	-	-	3,1	03330-10

Lateral spring plungers without seal, thrust pin POM, spring steel

Order No.	D	D1	L	L1	D2	±S	F ca.N	X if Y = 1	X if Y = 2	X if Y = 3	X if Y = 4.5	X if Y = 6	X if Y = 8	Order No. assembly tool
03330-71034	6	3	4	7	6	0,5	10	0,8	1	1	1	1	1	03330-03
03330-71054	10	5	6,7	11	10	0,8	20	-	1,5	1,7	1,7	1,7	1,7	03330-05
03330-71064	10	6	10,7	11	10	1	40	-	-	-	1,7	1,9	1,9	03330-05
03330-71084	12	8	13,9	13	12	1,3	50	-	-	-	-	2,5	2,7	03330-08
03330-71104	16	10	16,7	17	16	1,6	100	-	-	-	-	-	3,1	03330-10

Lateral spring plungers with seal, thrust pin POM, spring steel

Order No.	D	D1	L	L1	D2	±S	F ca.N	X if Y = 1	X if Y = 2	X if Y = 3	X if Y = 4.5	X if Y = 6	X if Y = 8	Order No. assembly tool
03330-72034	6	3	4	7	6	0,5	10	0,8	1	1	1	1	1	03330-03
03330-72054	10	5	6	12	10	0,8	20	-	1,5	1,7	1,7	1,7	1,7	03330-05
03330-72064	10	6	10	12	10	1	40	-	-	-	1,7	1,9	1,9	03330-05
03330-72084	12	8	13	14	12	1,3	50	-	-	-	-	2,5	2,7	03330-08
03330-72104	16	10	16	18	16	1,6	100	-	-	-	-	-	3,1	03330-10

Offset bushes and assembly tool

for lateral spring plungers.

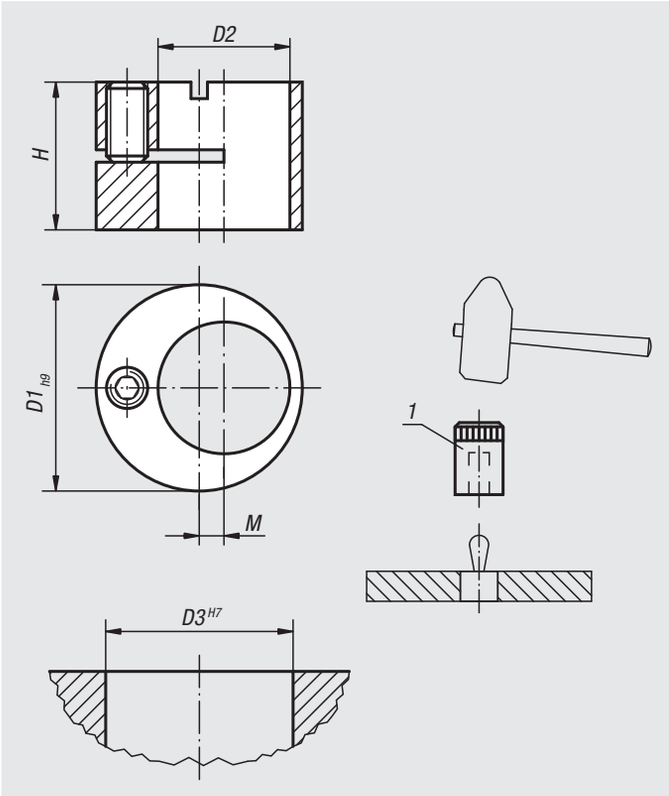

Material:
Steel.

Version:
Black oxidised.

Sample order:
nlm 03330-180

Note:
Offset bushes enable lateral spring plungers to be positioned exactly to the workpiece.

Drawing reference:
1) assembly tool

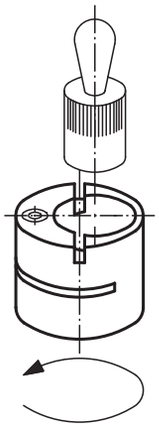

Assembly tools

Order No.	Suitable for lateral spring plungers with D =
03330-03	6
03330-05	10
03330-08	12
03330-10	16

Offset bushes for lateral spring plungers

Order No.	D1	D2	D3	H	M	Suitable for lateral spring plungers with D =
03330-120	12	6	12	9,9	2	6
03330-150	15	8	15	9,9	2	8
03330-160	16	10	16	11,9	2	10
03330-180	18	12	18	13,9	2	12
03330-250	25	16	25	17,9	3	16

Lateral spring plungers

without thrust pin

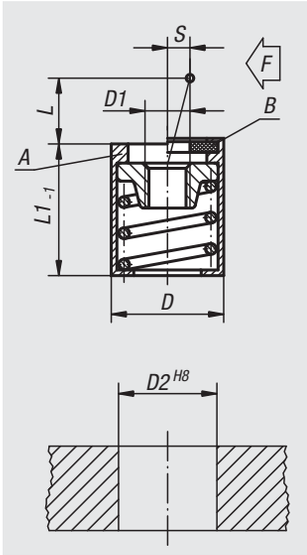

Material:
Sleeve aluminium.
Receiving washer steel.
Spring steel.

Version:
Sleeve blue galvanized.
Receiving washer, hardened and burnished.

Sample order:
nlm 03332-31058

Note:
The thrust pin can be made to suit the required circumstances and screwed into the tapped hole in the locating washer.
The required lateral thrust (F) can be achieved through the stroke (S) and length (L).
Form B has a seal to keep swarf and dirt out.

Drawing reference:
Form A: without seal
Form B: with seal

Lateral spring plungers without thrust pin, Form A, without seal

Order No.	Form	D	D1	D2	L	L1	S	F ca.N
03332-31054	A	10	M4	10	4	12	1,6	20
03332-31056	A	10	M4	10	4	12	1,6	50
03332-31058	A	10	M4	10	4	12	1,6	100
03332-31064	A	10	M4	10	7,5	12	2	40
03332-31066	A	10	M4	10	7,5	12	2	75
03332-31068	A	10	M4	10	7,5	12	2	100
03332-31104	A	16	M6	16	11,5	18	3,2	100
03332-31106	A	16	M6	16	11,5	18	3,2	150
03332-31108	A	16	M6	16	11,5	18	3,2	200

Lateral spring plungers without thrust pins, Form B, with seal

Order No.	Form	D	D1	D2	L	L1	S	F ca.N
03332-32054	B	10	M4	10	4	12	1,6	20
03332-32056	B	10	M4	10	4	12	1,6	50
03332-32058	B	10	M4	10	4	12	1,6	100
03332-32064	B	10	M4	10	7,5	12	2	40
03332-32066	B	10	M4	10	7,5	12	2	75
03332-32068	B	10	M4	10	7,5	12	2	100
03332-32104	B	16	M6	16	11,5	18	3,2	100
03332-32106	B	16	M6	16	11,5	18	3,2	150
03332-32108	B	16	M6	16	11,5	18	3,2	200

Lateral spring plungers

with threaded sleeve

Material:
Steel.

Version:
Thrust pin steel, hardened and galvanized.
Sleeve blue galvanized.

Sample order:
nlm 03334-1020X12

Note:
Lateral spring plungers with threaded sleeve can be individually adjusted to suit the the part being held. The threaded sleeve is also suitable for screwing into thin sheet metal as it can be fastened with one or two nuts.
W and Z are customer specified.

Drawing reference:
1) assembly tool

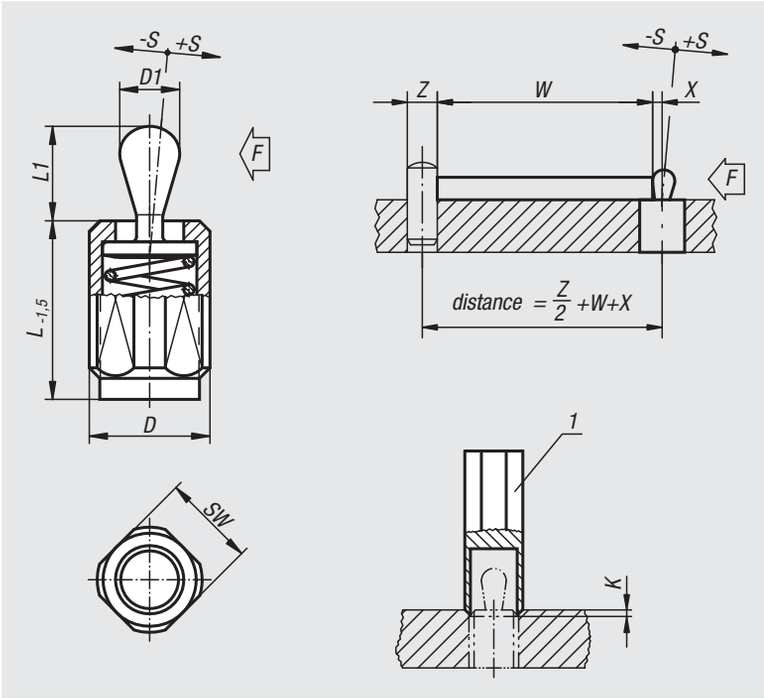

Lateral spring plungers without seal

Order No.	L	L1	D	D1	±S	F ca.N	X	SW	K	Order No. assembly tool
03334-1020X12	11,5	6,7	M12	5	0,8	20	1,6	10	2x60°	03334-06
03334-1020X20	19	6,7	M12	5	0,8	20	1,6	10	2x60°	03334-06
03334-1020X27	26,5	6,7	M12	5	0,8	20	1,6	10	2x60°	03334-06
03334-1050X12	11,5	6,7	M12	5	0,8	50	1,6	10	2x60°	03334-06
03334-1050X20	19	6,7	M12	5	0,8	50	1,6	10	2x60°	03334-06
03334-1050X27	26,5	6,7	M12	5	0,8	50	1,6	10	2x60°	03334-06
03334-1100X12	11,5	6,7	M12	5	0,8	100	1,6	10	2x60°	03334-06
03334-1100X20	19	6,7	M12	5	0,8	100	1,6	10	2x60°	03334-06
03334-1100X27	26,5	6,7	M12	5	0,8	100	1,6	10	2x60°	03334-06
03334-1040X12	11,5	10,7	M12	6	1	40	1,8	10	2x60°	03334-06
03334-1040X20	19	10,7	M12	6	1	40	1,8	10	2x60°	03334-06
03334-1040X27	26,5	10,7	M12	6	1	40	1,8	10	2x60°	03334-06
03334-1075X12	11,5	10,7	M12	6	1	75	1,8	10	2x60°	03334-06
03334-1075X20	19	10,7	M12	6	1	75	1,8	10	2x60°	03334-06
03334-1075X27	26,5	10,7	M12	6	1	75	1,8	10	2x60°	03334-06
03334-1150X12	11,5	10,7	M12	6	1	100	1,8	10	2x60°	03334-06
03334-1150X20	19	10,7	M12	6	1	100	1,8	10	2x60°	03334-06
03334-1150X27	26,5	10,7	M12	6	1	100	1,8	10	2x60°	03334-06
03334-1100X16	18	16,7	M18x1,5	10	1,6	100	3,2	16	2,5x60°	03334-10
03334-1100X29	31,5	16,7	M18x1,5	10	1,6	100	3,2	16	2,5x60°	03334-10
03334-1100X43	45	16,7	M18x1,5	10	1,6	100	3,2	16	2,5x60°	03334-10
03334-1200X16	18	16,7	M18x1,5	10	1,6	150	3,2	16	2,5x60°	03334-10
03334-1200X29	31,5	16,7	M18x1,5	10	1,6	150	3,2	16	2,5x60°	03334-10
03334-1200X43	45	16,7	M18x1,5	10	1,6	150	3,2	16	2,5x60°	03334-10
03334-1300X16	18	16,7	M18x1,5	10	1,6	200	3,2	16	2,5x60°	03334-10
03334-1300X29	31,5	16,7	M18x1,5	10	1,6	200	3,2	16	2,5x60°	03334-10
03334-1300X43	45	16,7	M18x1,5	10	1,6	200	3,2	16	2,5x60°	03334-10

Lateral spring plungers

with threaded sleeve

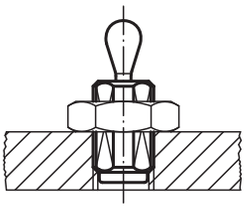

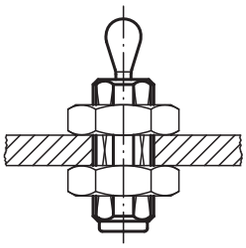

Lateral spring plungers with seal

Order No.	L	L1	D	D1	±S	F ca.N	X	SW	K	Order No. assembly tool
03334-3020X12	11,5	6	M12	5	0,8	20	1,6	10	2x60°	03334-06
03334-3020X20	19	6	M12	5	0,8	20	1,6	10	2x60°	03334-06
03334-3020X27	26,5	6	M12	5	0,8	20	1,6	10	2x60°	03334-06
03334-3050X12	11,5	6	M12	5	0,8	50	1,6	10	2x60°	03334-06
03334-3050X20	19	6	M12	5	0,8	50	1,6	10	2x60°	03334-06
03334-3050X27	26,5	6	M12	5	0,8	50	1,6	10	2x60°	03334-06
03334-3100X12	11,5	6	M12	5	0,8	100	1,6	10	2x60°	03334-06
03334-3100X20	19	6	M12	5	0,8	100	1,6	10	2x60°	03334-06
03334-3100X27	26,5	6	M12	5	0,8	100	1,6	10	2x60°	03334-06
03334-3040X12	11,5	10	M12	6	1	40	1,8	10	2x60°	03334-06
03334-3040X20	19	10	M12	6	1	40	1,8	10	2x60°	03334-06
03334-3040X27	26,5	10	M12	6	1	40	1,8	10	2x60°	03334-06
03334-3075X12	11,5	10	M12	6	1	75	1,8	10	2x60°	03334-06
03334-3075X20	19	10	M12	6	1	75	1,8	10	2x60°	03334-06
03334-3075X27	26,5	10	M12	6	1	75	1,8	10	2x60°	03334-06
03334-3150X12	11,5	10	M12	6	1	100	1,8	10	2x60°	03334-06
03334-3150X20	19	10	M12	6	1	100	1,8	10	2x60°	03334-06
03334-3150X27	26,5	10	M12	6	1	100	1,8	10	2x60°	03334-06
03334-3100X16	18	16	M18x1,5	10	1,6	100	3,2	16	2,5x60°	03334-10
03334-3100X29	31,5	16	M18x1,5	10	1,6	100	3,2	16	2,5x60°	03334-10
03334-3100X43	45	16	M18x1,5	10	1,6	100	3,2	16	2,5x60°	03334-10
03334-3200X16	18	16	M18x1,5	10	1,6	150	3,2	16	2,5x60°	03334-10
03334-3200X29	31,5	16	M18x1,5	10	1,6	150	3,2	16	2,5x60°	03334-10
03334-3200X43	45	16	M18x1,5	10	1,6	150	3,2	16	2,5x60°	03334-10
03334-3300X16	18	16	M18x1,5	10	1,6	200	3,2	16	2,5x60°	03334-10
03334-3300X29	31,5	16	M18x1,5	10	1,6	200	3,2	16	2,5x60°	03334-10
03334-3300X43	45	16	M18x1,5	10	1,6	200	3,2	16	2,5x60°	03334-10

Lateral spring plungers

with threaded sleeve, without thrust pin

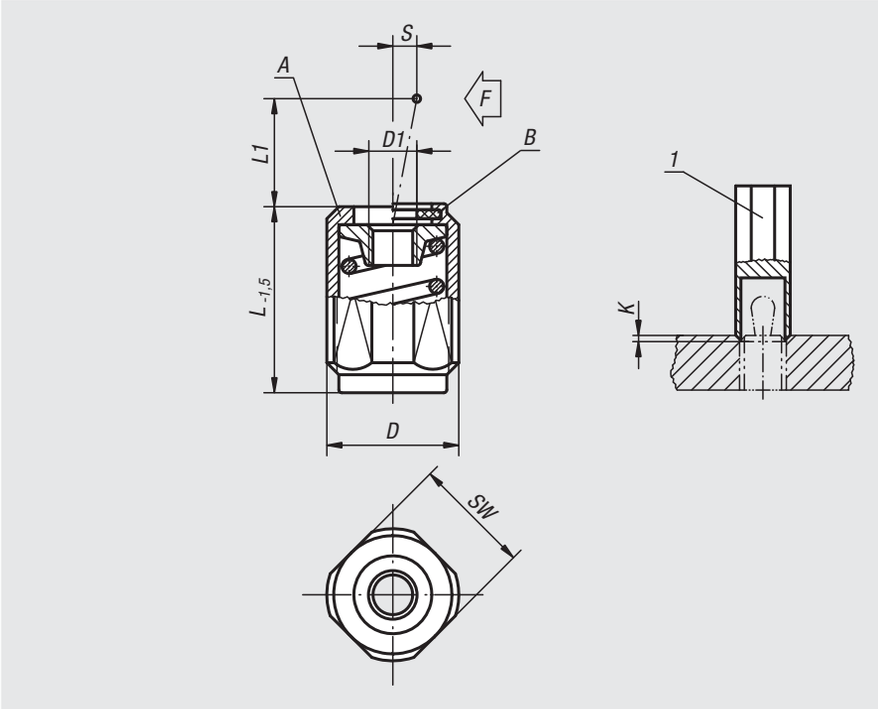

Material:
Steel.

Version:
Sleeve blue galvanized.
Receiving washer, hardened and burnished.

Sample order:
nlm 03336-1100X20

Note:
The thrust pin can be made to suit the required circumstances and screwed into the tapped hole in the locating washer.
The required lateral thrust (F) can be achieved through the stroke (S) and length (L).
Form B has a seal to keep swarf and dirt out.

Drawing reference:
Form A: without seal
Form B: with seal

1) assembly tool

Order No. Form A	Order No. Form B	L	L1	D	D1	±S	F ca.N	SW	K	Order No. assembly tool
03336-1020X	03336-2020X	11,5	4	M12	M4	1,6	20	10	2x60°	03334-06
03336-1020X	03336-2020X	19	4	M12	M4	1,6	20	10	2x60°	03334-06
03336-1020X	03336-2020X	26,5	4	M12	M4	1,6	20	10	2x60°	03334-06
03336-1050X	03336-2050X	11,5	4	M12	M4	1,6	50	10	2x60°	03334-06
03336-1050X	03336-2050X	19	4	M12	M4	1,6	50	10	2x60°	03334-06
03336-1050X	03336-2050X	26,5	4	M12	M4	1,6	50	10	2x60°	03334-06
03336-1100X	03336-2100X	11,5	4	M12	M4	1,6	100	10	2x60°	03334-06
03336-1100X	03336-2100X	19	4	M12	M4	1,6	100	10	2x60°	03334-06
03336-1100X	03336-2100X	26,5	4	M12	M4	1,6	100	10	2x60°	03334-06
03336-1040X	03336-2040X	11,5	7,5	M12	M4	2	40	10	2x60°	03334-06
03336-1040X	03336-2040X	19	7,5	M12	M4	2	40	10	2x60°	03334-06
03336-1040X	03336-2040X	26,5	7,5	M12	M4	2	40	10	2x60°	03334-06
03336-1075X	03336-2075X	11,5	7,5	M12	M4	2	75	10	2x60°	03334-06
03336-1075X	03336-2075X	19	7,5	M12	M4	2	75	10	2x60°	03334-06
03336-1075X	03336-2075X	26,5	7,5	M12	M4	2	75	10	2x60°	03334-06
03336-1150X	03336-2150X	11,5	7,5	M12	M4	2	100	10	2x60°	03334-06
03336-1150X	03336-2150X	19	7,5	M12	M4	2	100	10	2x60°	03334-06
03336-1150X	03336-2150X	26,5	7,5	M12	M4	2	100	10	2x60°	03334-06
03336-1100X	03336-2100X	18	11,5	M18x1,5	M6	3,2	100	16	2,5x60°	03334-10
03336-1100X	03336-2100X	31,5	11,5	M18x1,5	M6	3,2	100	16	2,5x60°	03334-10
03336-1100X	03336-2100X	45	11,5	M18x1,5	M6	3,2	100	16	2,5x60°	03334-10
03336-1200X	03336-2200X	18	11,5	M18x1,5	M6	3,2	150	16	2,5x60°	03334-10
03336-1200X	03336-2200X	31,5	11,5	M18x1,5	M6	3,2	150	16	2,5x60°	03334-10
03336-1200X	03336-2200X	45	11,5	M18x1,5	M6	3,2	150	16	2,5x60°	03334-10
03336-1300X	03336-2300X	18	11,5	M18x1,5	M6	3,2	200	16	2,5x60°	03334-10
03336-1300X	03336-2300X	31,5	11,5	M18x1,5	M6	3,2	200	16	2,5x60°	03334-10
03336-1300X	03336-2300X	45	11,5	M18x1,5	M6	3,2	200	16	2,5x60°	03334-10

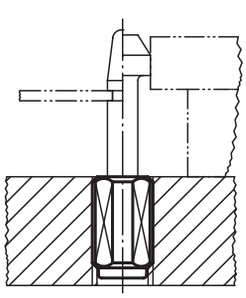

Push-Pull spring plungers

Material:
Steel.

Version:
Sleeve blue galvanized.
Spring pins black oxidised.

Sample order:
nlm 03338-1202004

Note:
The tapped hole in both ends of the spring pin allow various inserts to be attached e.g. prisms, thrust pins, self-aligning pads, knobs, grips etc.

Assembly:
LOCTITE threadlocker 97990-243.... is recommended for gluing the threaded sleeve in position.

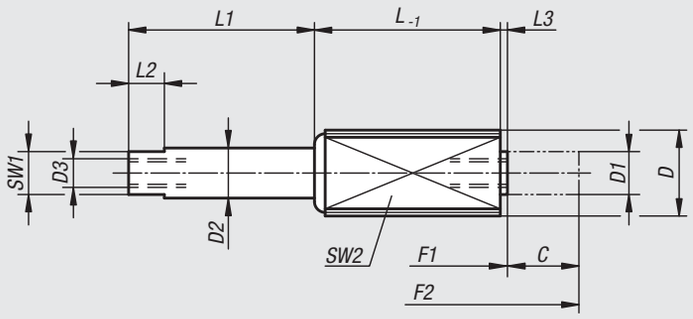

push-pull plunger

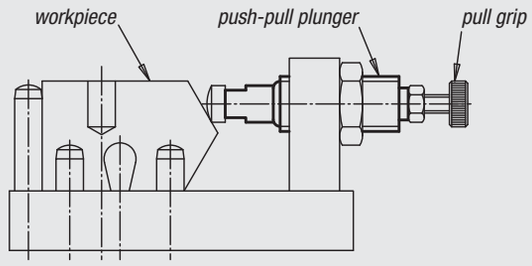

pull plunger
as lock

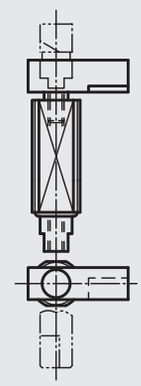

push-pull plunger as carrier

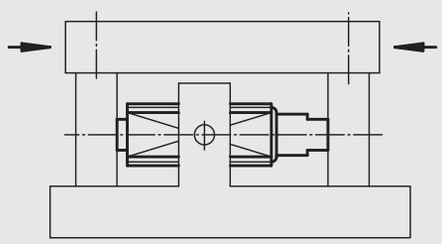

Application:

As **push plunger:**
The spring force pushes the object.

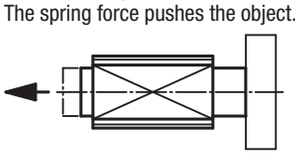

As **pull plunger:**
The spring force pulls the object.

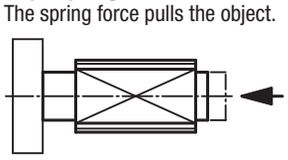

As **push-pull plunger**:
In this case the internal pin has a fixed position.
The threaded sleeve acts as carrier.
The spring force pushes or pulls the object in both directions.

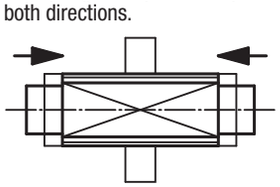

Order No.	D	D1	D2	D3	F1 N	F2 N	C (travel)	L	L1	L2	L3	SW1	SW2 square
03338-1202004	M12	6	7	M4 x 8	5	20	3,5	11	4,5	5	1	6	10
03338-1202006	M12	6	7	M4 x 8	5	20	6	18,5	7	5	1	6	10
03338-1202010	M12	6	7	M4 x 8	5	20	10	26	11	5	1	6	10
03338-1206003	M12	6	7	M4 x 8	12	40	3	11	4,5	5	1	6	10
03338-1206005	M12	6	7	M4 x 8	12	40	5	18,5	7	5	1	6	10
03338-1206008	M12	6	7	M4 x 8	12	40	8	26	11	5	1	6	10
03338-1212503	M12	6	7	M4 x 8	20	100	3	11	4,5	5	1	6	10
03338-1212505	M12	6	7	M4 x 8	20	100	5	18,5	7	5	1	6	10
03338-1212508	M12	6	7	M4 x 8	20	100	8	26	11	5	1	6	10
03338-1815004	M18x1,5	10	11	M6 x 12	50	150	4	17	6	6	2,5	9	16
03338-1815007	M18x1,5	10	11	M6 x 12	50	150	7	29,5	11,5	6	2,5	9	16
03338-1815013	M18x1,5	10	11	M6 x 12	50	150	12,5	45,5	16	6	2,5	9	16

Push-Pull spring plungers

with rotation lock

Material:
Steel.

Version:
Threaded sleeve galvanized and blue passivated.Screw case hardened and black oxidised.
Standard spring force, intensified spring force.

Sample order:
nlm 03339-1112

Note:
The push-pull spring plungers, also called two-way spring plungers are used to engage, position or clamp various components. The threaded pin, which is locked against rotation by the hexagonal form can be used for traction or thrust.

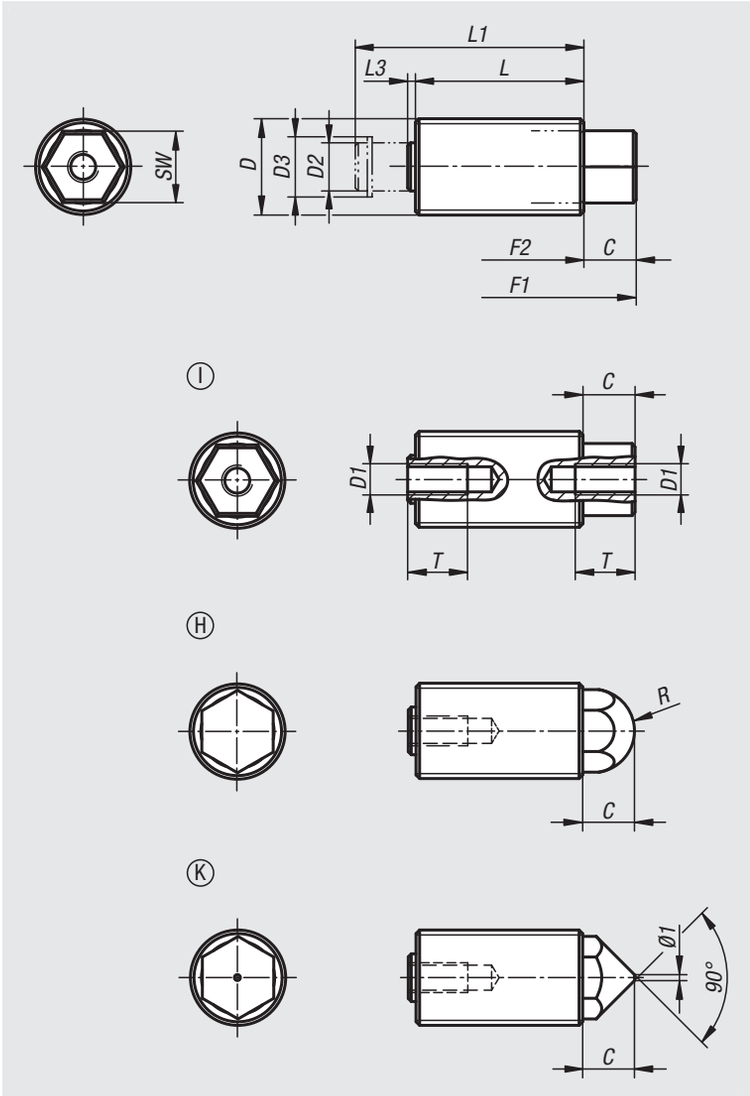

Order No.	Form	Version	D	SW	D1	D2	D3	F1 N	F2 N	C (travel)	L	L1	L3	R	T min.
03339-1112	I	standard spring force	M12x1,5	8	M4	5,5	6,78	16	38	6,12	20	27,5	1,38	-	8
03339-1116	I	standard spring force	M16x1,5	12	M5	8	10	25	71	8,7	28	38	1,3	-	10
03339-1120	I	standard spring force	M20x1,5	15	M6	10	12,2	40	140	10,3	34	47	2,7	-	12
03339-1212	I	intensified spring force	M12x1,5	8	M4	5,5	6,78	20	60	6,12	20	27,5	1,38	-	8
03339-1216	I	intensified spring force	M16x1,5	12	M5	8	10	35	103	8,7	28	38	1,3	-	10
03339-1220	I	intensified spring force	M20x1,5	15	M6	10	12,2	60	175	10,3	34	47	2,7	-	12
03339-2112	H	standard spring force	M12x1,5	8	M4	5,5	6,78	16	38	6,12	20	27,5	1,38	5,5	8
03339-2116	H	standard spring force	M16x1,5	12	M5	8	10	25	71	8,7	28	38	1,3	7	10
03339-2120	H	standard spring force	M20x1,5	15	M6	10	12,2	40	140	10,3	34	47	2,7	9	12
03339-2212	H	intensified spring force	M12x1,5	8	M4	5,5	6,78	20	60	6,12	20	27,5	1,38	5,5	8
03339-2216	H	intensified spring force	M16x1,5	12	M5	8	10	35	103	8,7	28	38	1,3	7	10
03339-2220	H	intensified spring force	M20x1,5	15	M6	10	12,2	60	175	10,3	34	47	2,7	9	12
03339-3112	K	standard spring force	M12x1,5	8	M4	5,5	6,78	16	38	6,12	20	27,5	1,38	-	8
03339-3116	K	standard spring force	M16x1,5	12	M5	8	10	25	71	8,7	28	38	1,3	-	10
03339-3120	K	standard spring force	M20x1,5	15	M6	10	12,2	40	140	10,3	34	47	2,7	-	12
03339-3212	K	intensified spring force	M12x1,5	8	M4	5,5	6,78	20	60	6,12	20	27,5	1,38	-	8
03339-3216	K	intensified spring force	M16x1,5	12	M5	8	10	35	103	8,7	28	38	1,3	-	10
03339-3220	K	intensified spring force	M20x1,5	15	M6	10	12,2	60	175	10,3	34	47	2,7	-	12

Lateral spring plungers

Material:
Body mild steel.
Ball steel or stainless steel hardened or POM.
Spring stainless steel or plastic.

Version:
Body black oxidised.
Ball bright.

Sample order:
nlm 03340-410

Note:
The lateral spring plunger must be pressed into the hole to at least depth L3. These plungers are for positioning and holding small parts in fixtures. If mechanical machining of the workpiece is to be carried out, other clamps may be necessary. When the fixture is not in use it should be ensured that plastic springs are not under stress.

Spring force refers to a mean value.

Drawing reference:
1) knurl
2) light holding

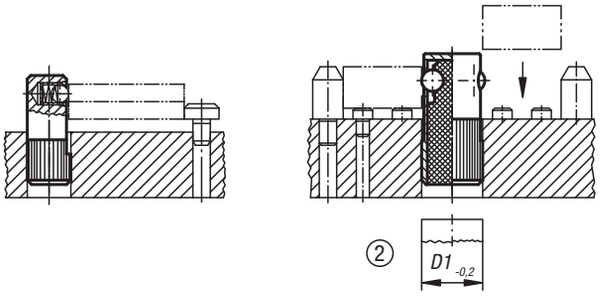

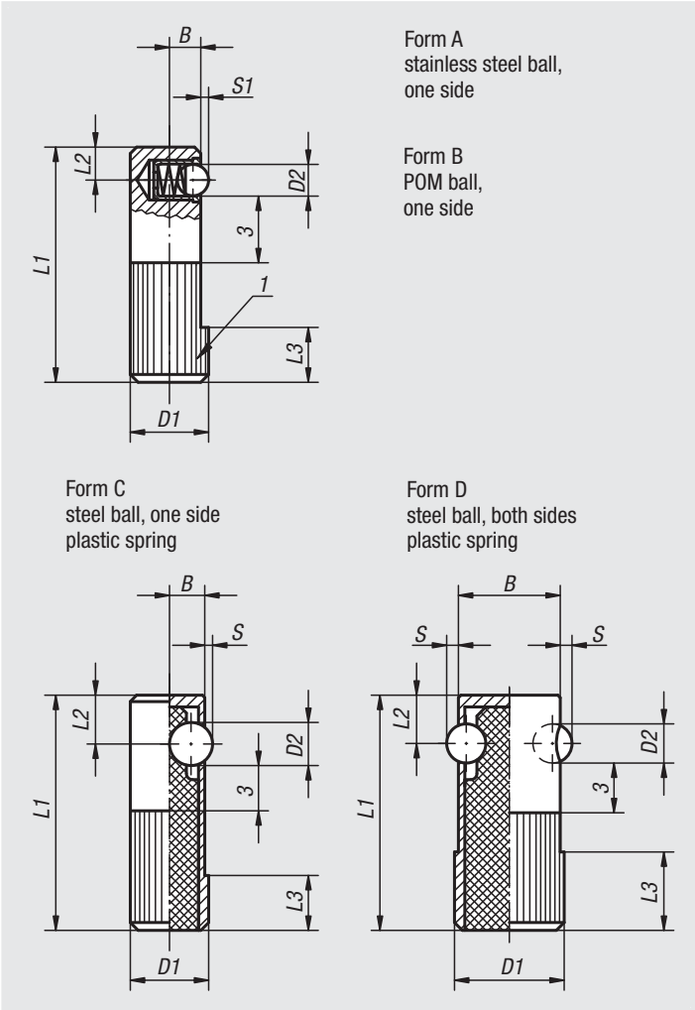

Order No.	Form	D1	D2	L1	L2	L3	B	S	S1	Receiving hole H8	Spring force initial N	Spring force final N
03340-008	A	8	3	25	3,6	6	3,2	-	0,7	8	2,5	6,5
03340-010	A	10	4	30	4,2	7	4	-	1	10	4,5	9
03340-012	A	12	5	35	4,8	9	5	-	1,5	12	6,5	13
03340-014	A	14	6,5	40	5,8	10	5,4	-	1,8	14	8	18
03340-108	B	8	3	25	3,6	6	3,2	-	0,7	8	2,5	6,5
03340-110	B	10	4	30	4,2	7	4	-	1	10	4,5	9
03340-112	B	12	5	35	4,8	9	5	-	1,5	12	6,5	13
03340-114	B	14	6,5	40	5,8	10	5,4	-	1,8	14	8	18
03340-410	C	10	5,5	30	7	8	4,5	1	-	10	60	170
03340-412	C	12	6,5	35	8	9	5,5	1,5	-	12	80	260
03340-414	C	14	8	40	9	10	6,5	2	-	14	120	480
03340-616	D	16	5,5	35	7	11	15	1,5	-	16	110	220
03340-618	D	18	6,5	40	8	12	17	1,8	-	18	120	330
03340-622	D	22	8	45	9	15	21	2,5	-	22	130	540

Shaft clamping units

Material:
Jaws steel.
Spring 1.4310.
Screw grade 8.8.

Version:
Jaws black oxidised.
Screw blue galvanised.

Sample order:
nlm 03350-04

Note:
These shaft clamping units are the simple alternative to conventional shaft clamping (slot and grub screw).
The units are suitable for various materials (metal, plastic, wood etc).
To loosen a jammed clamp simply hit it axially or extract it using a screw in the jaw end or screw head.

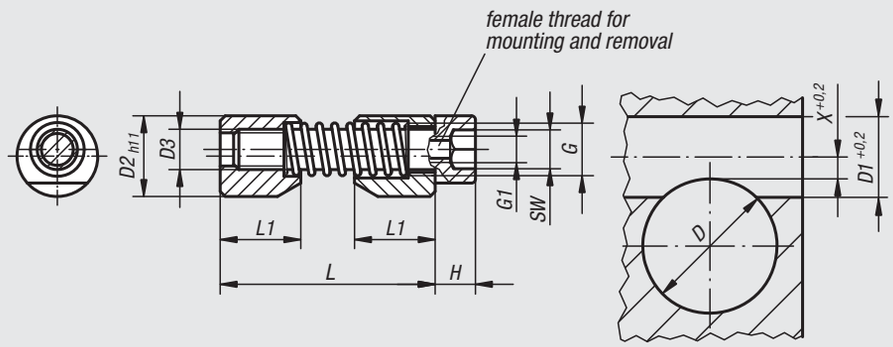

axial and radial clamping

adjusting and clamping

clamping torque Mx

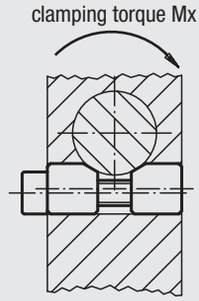

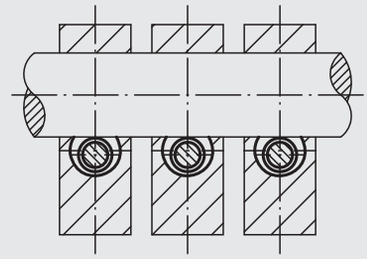

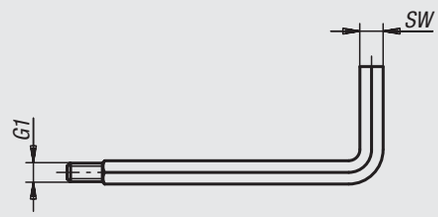

Special hex key with a threaded pin.
The pin is screwed into the hole G1 in the head of the cap screw to aid in positioning or removing the clamping unit.

Insert clamping unit

Insert shaft or tube

Clamp

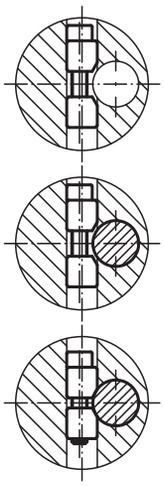

Order No.	D	D1	D2	D3	L max.	L1	X	G	G1	H	K	SW	Mx Nm	Order No. assembly tool
03350-04	6-10	8	8	M4	27	8	2,8	M5	M2,5	4	10	3	max. 20	03350-904
03350-05	10-15	10	10	M5	33	10	3,3	M6	M3	5	10	4	max. 45	03350-905
03350-06	15-20	12	12	M6	39	12	3,5	M7	M4	6	10	5	max. 100	03350-906
03350-08	20-30	16	16	M8	46	16	4	M10	M5	8	10	6	max. 170	03350-908
03350-10	30-40	20	20	M10	53	20	4,8	M12	M6	10	15	8	max. 290	03350-910
03350-12	40-60	25	25	M12	70	25	5,6	M14	M8	12	15	10	max. 450	03350-912
03350-16	60-125	30	30	M16	81	30	7,9	M18	M10	16	15	14	max. 650	03350-916

Locking pins

with folding latch

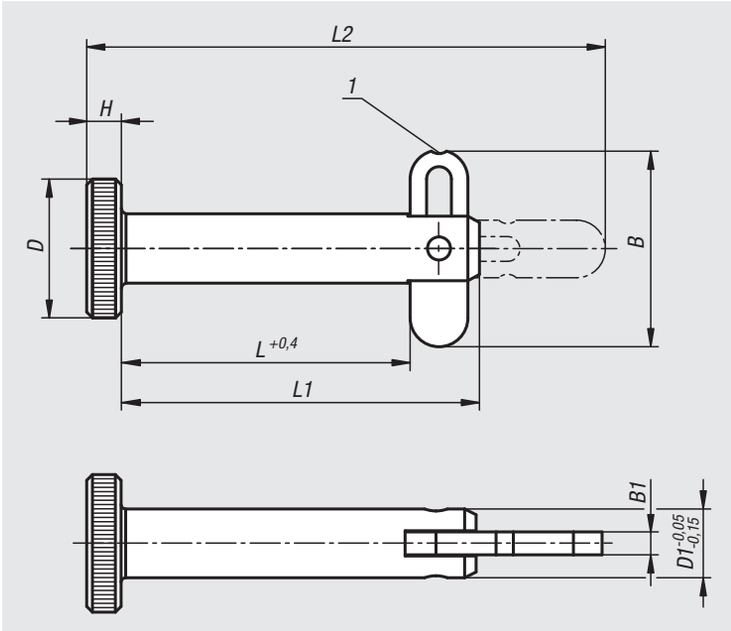

Material:
Steel galvanized.

Sample order:
nlm 03400-06025

Note:
Locking pins with folding latch are not only used for fast and easy fixing but also for permanent joining of movable parts and workpieces.
The wide folding latch lets you secure the parts to be joined over a large cross section. It can also work under pressure in the axial direction.
Indexing slots in the folding latch allow definite “Closed” and “Open” positions.

Drawing reference:
1) locking slot

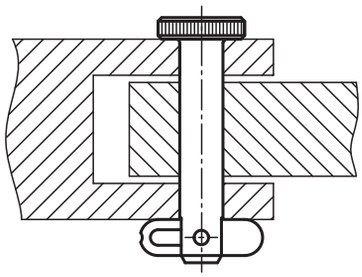

Order No.	D	D1	L	L1	L2	H	B	B1	Receiving hole H11	Shearing force double shear max.kN	Extraction force F N
03400-06025	12	6	25	31	45	3	16,9	2	6	12	190
03400-06040	12	6	40	46	60	3	16,9	2	6	12	190
03400-06050	12	6	50	56	70	3	16,9	2	6	12	190
03400-08025	16	8	25	31	46	4	16,9	2	8	21	270
03400-08040	16	8	40	46	61	4	16,9	2	8	21	270
03400-08050	16	8	50	56	71	4	16,9	2	8	21	270

Locking pins

with axial locking

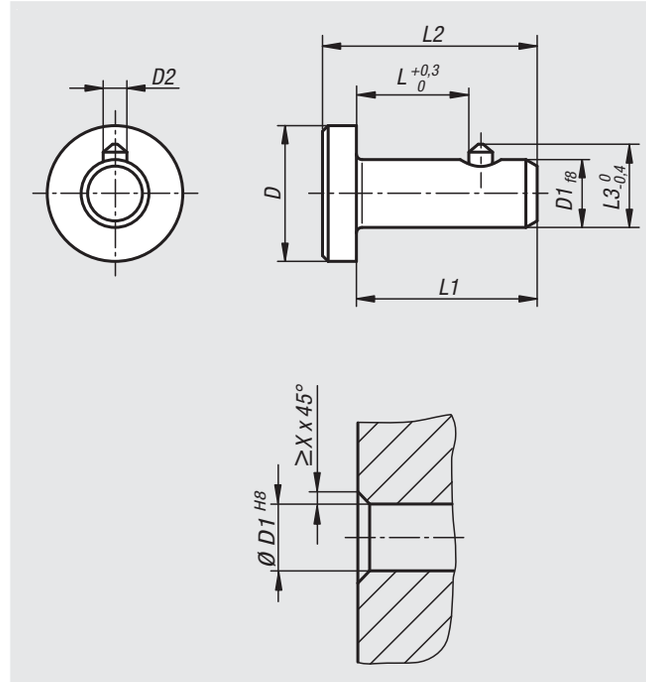

Material:
Steel.

Version:
galvanized.

Sample order:
nlm 03410-1206016

Note:
Locking pins are used for quick and easy fixating and joining of parts and workpieces.

Shearing force double-shear (F) = S · τ aB max.

Assembly:
Observe the assembly aid dimension X in the workpiece.

Drawing reference:
Chamfer for counterpart Xmin. x 45°

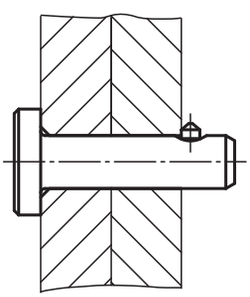

Order No.	D	D1	D2	X	L	L1	L2	L3	Shearing force double shear max.kN
03410-1206010	12	6	2,1	1,1	10	16	19	7,4	12
03410-1206012	12	6	2,1	1,1	12	18	21	7,4	12
03410-1206016	12	6	2,1	1,1	16	22	25	7,4	12
03410-1206020	12	6	2,1	1,1	20	26	29	7,4	12
03410-1608012	16	8	2,1	1,1	12	18	22	9,4	22
03410-1608016	16	8	2,1	1,1	16	22	26	9,4	22
03410-1608020	16	8	2,1	1,1	20	26	30	9,4	22
03410-1608025	16	8	2,1	1,1	25	31	35	9,4	22
03410-2010012	20	10	2,8	1,2	12	20	24	11,8	35
03410-2010016	20	10	2,8	1,2	16	24	28	11,8	35
03410-2010020	20	10	2,8	1,2	20	28	32	11,8	35
03410-2010025	20	10	2,8	1,2	25	33	37	11,8	35
03410-2412016	24	12	2,8	1,2	16	24	29	13,8	51
03410-2412020	24	12	2,8	1,2	20	28	33	13,8	51
03410-2412025	24	12	2,8	1,2	25	33	38	13,8	51
03410-2412030	24	12	2,8	1,2	30	38	43	13,8	51

Ball lock pins

stainless steel, self-locking

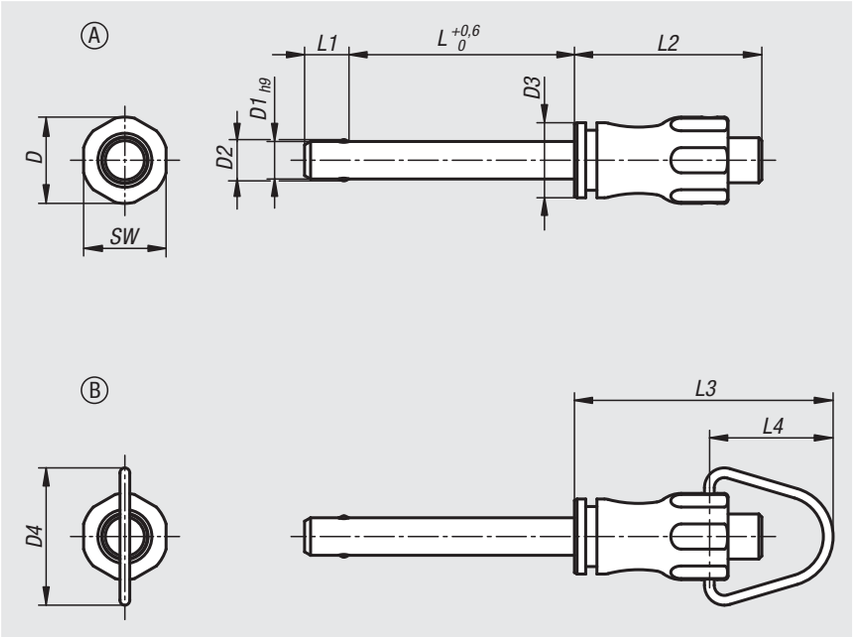

Material:
Grip and push button stainless steel 1.4305.
Pin stainless steel 1.4305.
Balls stainless steel 1.4125.
Compression spring and handle stainless steel 1.4310.

Version:
Bright.

Sample order:
nlm 03415-001508050
(include length L e.g. 050 for L = 50 mm)

Note:
Ball lock pins are used for quick and easy fastening and joining of parts and workpieces.
The two balls are disengaged by pressing the push button and the pin can be slipped into holes in the workpieces. Release the button to lock the balls and secure the connection.

Shearing force double-shear (F) = S · τ aB max.

Accessories:
Safety spiral cable 03199-10200
Retaining cable with loop 03199-....
Key ring 03199-15/19/23
Bushing for ball lock pins 03197....

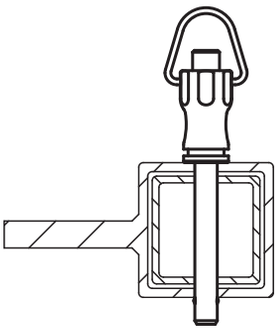

Ball lock pins stainless steel self-locking, Form A

Order No. Form A	D	D1	D2	D3	L	L1	L2	SW	Receiving hole H11	Shearing force double shear max.kN
03415-001205* **	11,5	5	5,5	10	10/15/20/25/30	5,9	25	11	5	15
03415-001206* **	11,5	6	6,85	10	10/15/20/25/30/35/40/45/50	6,8	25	11	6	22
03415-001508* **	15,5	8	9,5	13,5	20/25/30/35/40/45/50	7,8	33	15	8	38
03415-001510* **	15,5	10	12	13,5	20/25/30/35/40/45/50/60	8,9	33	15	10	60
03415-002112* **	22	12	14,5	20	25/30/35/40/45/50/60/70/80	9,9	39,5	21	12	86
03415-002116* **	22	16	19	20	30/35/40/45/50/60/70/80	13,1	39,5	21	16	153

Ball lock pins stainless steel self-locking, Form B

Order No. Form B	D	D1	D2	D3	D4	L	L1	L2	L3	L4	SW	Receiving hole H11	Shearing force double shear max.kN	
03415-101205* **	11,5	5	5,5	10	18,3	10/15/20/25/30	5,9	25	34,6	16,6	11	5	15	
03415-101206* **	11,5	6	6,85	10	18,3	10/15/20/25/30/35/40/45/50	6,8	25	34,6	16,6	11	6	22	
03415-101508* **	15,5	8	9,5	13,5	24	20/25/30/35/40/45/50	7,8	33	46,7	22,7	15	8	38	
03415-101510* **	15,5	10	12	13,5	24	20/25/30/35/40/45/50/60	8,9	33	46,7	22,7	15	10	60	
03415-102112* **	22	12	14,5	20	33	25/30/35/40/45/50/60/70/80	9,9	39,5	59,3	30,3	21	12	86	
03415-102116* **	22	16	19	20	33	30/35/40/45/50/60/70/80	13,1	39,5	59,3	30,3	21	16	153	

Ball lock pins with mushroom knob

stainless steel, self-locking

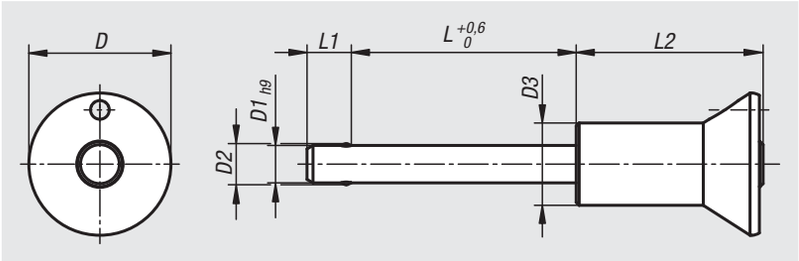

Material:
Mushroom knob and push button stainless steel 1.4305.
Pin stainless steel 1.4305.
Balls stainless teel 1.4125.
Compression spring stainless steel 1.4310.

Version:
Bright.

Sample order:
nlm 03418-02510050
(include length L e.g. 050 for L = 50 mm)

Note:
Ball lock pins are used for quick and easy fastening and joining of parts and workpieces.
The two balls are disengaged by pressing the push button and the pin can be slipped into holes in the workpieces. Release the button to lock the balls and secure the connection.

Shearing force double-shear (F) = S · τ aB max.

Accessories:
Safety spiral cable 03199-10200
Retaining cable with loop 03199-....
Key ring 03199-15/19/23
Bushing for ball lock pins 03197....

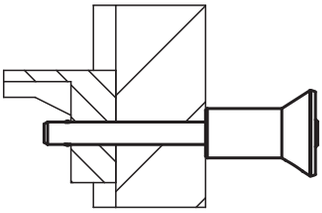

Order No.	D	D1	D2	D3	L	L1	L2	Receiving hole H11	Shearing force double shear max.kN
03418-01905* **	19	5	5,5	11	10/15/20/25/30	5,9	25	5	15
03418-01906* **	19	6	6,85	11	10/15/20/25/30/35/40/45/50	6,8	25	6	22
03418-02508* **	25	8	9,5	14	20/25/30/35/40/45/50	7,8	33	8	38
03418-02510* **	25	10	12	14	20/25/30/35/40/45/50/60	8,9	33	10	60
03418-03512* **	35	12	14,5	22	25/30/35/40/45/50/60/70/80	9,9	39,5	12	86
03418-03516* **	35	16	19	22	30/35/40/45/50/60/70/80	13,1	39,5	16	153

Ball lock pins

self-locking

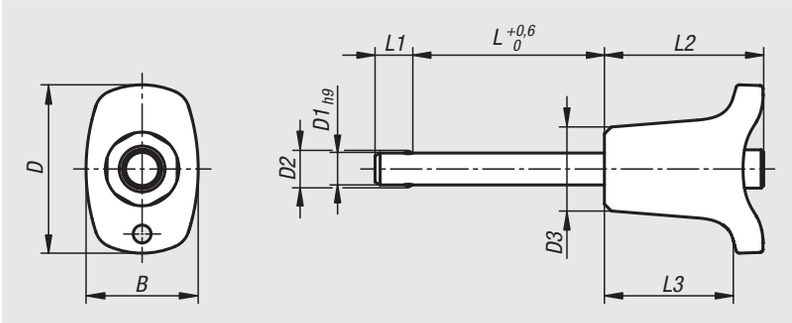

Material:
Grip thermoplastic.
Steel parts stainless steel 1.4305.

Version:
Grip black.
Steel parts bright.

Sample order:
nlm 03420-002606050
(include length L e.g. 050 for L = 50 mm.)

Note:
Ball lock pins are used for quick and easy fastening and joining of parts and workpieces. The two balls are disengaged by pressing the push button and the pin can be slipped into holes in the workpieces. Release the button to lock the balls and secure the connection. An option for connecting a retaining cable is provided.

Shearing force double shear (F) = S · τ aB max.

Accessories:
Safety spiral cable 03199-10200
Retaining cable with loop 03199-....
Key ring 03199-15/19/23
Bushing for ball lock pins 03197....

Order No.	B	D	D1	D2	D3	L	L1	L2	L3	Receiving hole H11	Shearing force double shear max.kN
03420-002605* **	17,6	26,4	5	5,5	13,2	10/15/20/25/30	5,9	25	20,2	5	15
03420-002606* **	17,6	26,4	6	6,85	13,2	10/15/20/25/30/35/40/45/50	6,8	25	20,2	6	22
03420-003308* **	23	33,2	8	9,5	17,3	20/25/30/35/40/45/50	7,8	33	26,1	8	38
03420-003310* **	23	33,2	10	12	17,3	20/25/30/35/40/45/50/60	8,9	33	26,1	10	60
03420-004612* **	33	45,9	12	14,5	26,3	25/30/35/40/45/50/60/70/80	9,9	39,5	31,3	12	86
03420-004616* **	33	45,9	16	19	26,3	30/35/40/45/50/60/70/80	13,1	39,5	31,3	16	153

Ball lock pins

with L-grip, self-locking

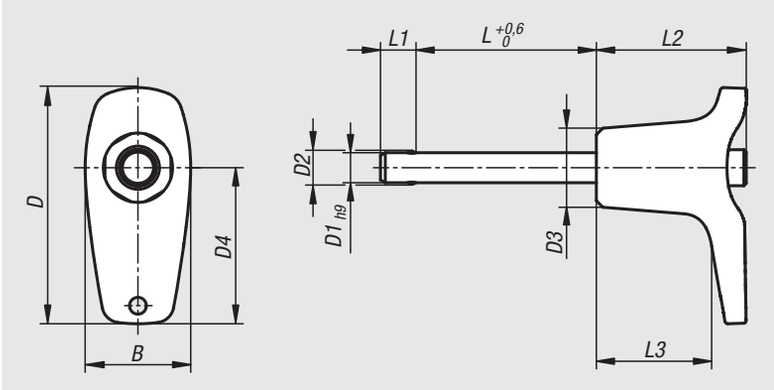

Material:
Grip thermoplastic.
Steel parts stainless steel 1.4305.

Version:
Grip black.
Steel parts bright.

Sample order:
nlm 03420-102606050
(include length L e.g. 050 for L = 50 mm.)

Note:
Ball lock pins are used for quick and easy fastening and joining of parts and workpieces. The two balls are disengaged by pressing the push button and the pin can be slipped into holes in the workpieces. Release the button to lock the balls and secure the connection. An option for connecting a retaining cable is provided.

Shearing force double shear (F) = S · τ aB max.

Accessories:
Safety spiral cable 03199-10200
Retaining cable with loop 03199-....
Key ring 03199-15/19/23
Bushing for ball lock pins 03197....

Order No.	B	D	D1	D2	D3	D4	L	L1	L2	L3	Receiving hole H11	Shearing force double shear max.kN
03420-102605* **	17,6	39,3	5	5,5	13,2	26	10/15/20/25/30	5,9	25	19,2	5	15
03420-102606* **	17,6	39,3	6	6,85	13,2	26	10/15/20/25/30/35/40/45/50	6,8	25	19,2	6	22
03420-103508* **	23	52,2	8	9,5	17,3	35,4	20/25/30/35/40/45/50	7,8	33	24,2	8	38
03420-103510* **	23	52,2	10	12	17,3	35,4	20/25/30/35/40/45/50/60	8,9	33	24,2	10	60
03420-104712* **	33	70,2	12	14,5	26,3	47	25/30/35/40/45/50/60/70/80	9,9	39,5	28,4	12	86
03420-104716* **	33	70,2	16	19	26,3	47	30/35/40/45/50/60/70/80	13,1	39,5	28,4	16	153

Ball lock pins

with T-grip, self-locking

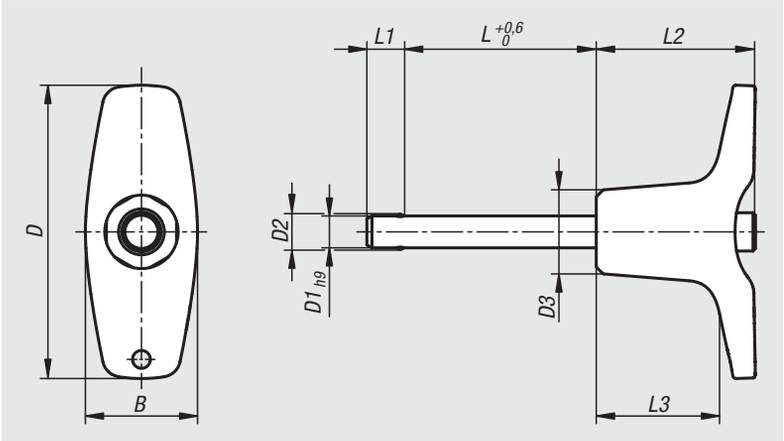

Material:
Grip thermoplastic.
Steel parts stainless steel 1.4305.

Version:
Grip black.
Steel parts bright.

Sample order:
nlm 03420-204606050
(include length L e.g. 050 for L = 50 mm.)

Note:
Ball lock pins are used for quick and easy fastening and joining of parts and workpieces. The two balls are disengaged by pressing the push button and the pin can be slipped into holes in the workpieces. Release the button to lock the balls and secure the connection. An option for connecting a retaining cable is provided.

Shearing force double shear (F) = S · τ aB max.

Accessories:
Safety spiral cable 03199-10200
Retaining cable with loop 03199-....
Key ring 03199-15/19/23
Bushing for ball lock pins 03197....

Order No.	B	D	D1	D2	D3	L	L1	L2	L3	Receiving hole H11	Shearing force double shear max.kN
03420-204605* **	17,6	46	5	5,5	13,2	10/15/20/25/30	5,9	25	19,4	5	15
03420-204606* **	17,6	46	6	6,85	13,2	10/15/20/25/30/35/40/45/50	6,8	25	19,4	6	22
03420-206308* **	23	62,9	8	9,5	17,3	20/25/30/35/40/45/50	7,8	33	24,4	8	38
03420-206310* **	23	62,9	10	12	17,3	20/25/30/35/40/45/50/60	8,9	33	24,4	10	60
03420-208212* **	33	81,8	12	14,5	26,3	25/30/35/40/45/50/60/70/80	9,9	39,5	28,8	12	86
03420-208216* **	33	81,8	16	19	26,3	30/35/40/45/50/60/70/80	13,1	39,5	28,8	16	153

Ball lock pins

with zinc L-grip, self-locking

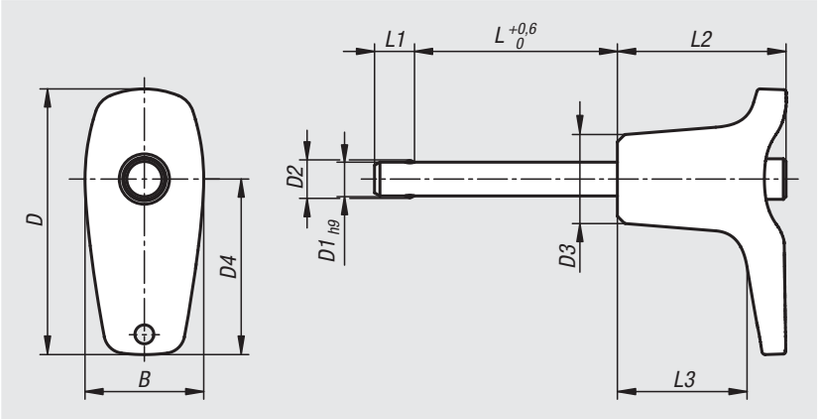

Material:
Grip die-cast zinc.
Stainless steel parts 1.4305.

Version:
Grip black.
Steel parts bright.

Sample order:
nlm 03422-102606050
(include length L e.g. 050 for L = 50 mm.)

Note:
Ball lock pins are used for quick and easy fastening and joining of parts and workpieces. The two balls are disengaged by pressing the push button and the pin can be slipped into holes in the workpieces. Release the button to lock the balls and secure the connection. An option for connecting a retaining cable is provided.

Shearing force double shear (F) = S · τ aB max.

Accessories:
Safety spiral cable 03199-10200
Retaining cable with loop 03199-....
Key ring 03199-15/19/23
Bushing for ball lock pins 03197....

Order No.	B	D	D1	D2	D3	D4	L	L1	L2	L3	Receiving hole H11	Shearing force double shear max.kN
03422-102605* **	17,6	39,3	5	5,5	13,2	26	10/15/20/25/30	5,9	25	19,2	5	15
03422-102606* **	17,6	39,3	6	6,85	13,2	26	10/15/20/25/30/35/40/45/50	6,8	25	19,2	6	22
03422-103508* **	23	52,2	8	9,5	17,3	35,4	20/25/30/35/40/45/50	7,8	33	24,2	8	38
03422-103510* **	23	52,2	10	12	17,3	35,4	20/25/30/35/40/45/50/60	8,9	33	24,2	10	60
03422-104712* **	33	70,2	12	14,5	26,3	47	25/30/35/40/45/50/60/70/80	9,9	39,5	28,4	12	86
03422-104716* **	33	70,2	16	19	26,3	47	30/35/40/45/50/60/70/80	13,1	39,5	28,4	16	153

Ball lock pins

with zinc T-grip, self-locking

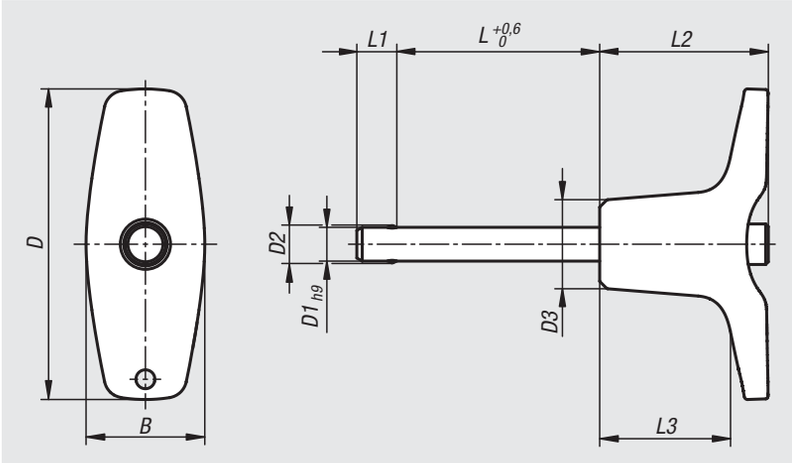

Material:
Grip die-cast zinc.
Stainless steel parts 1.4305.

Version:
Grip black.
Steel parts bright.

Sample order:
nlm 03422-204606050
(include length L e.g. 050 for L = 50 mm.)

Note:
Ball lock pins are used for quick and easy fastening and joining of parts and workpieces. The two balls are disengaged by pressing the push button and the pin can be slipped into holes in the workpieces. Release the button to lock the balls and secure the connection. An option for connecting a retaining cable is provided.

Shearing force double shear (F) = S · τ aB max.

Accessories:
Safety spiral cable 03199-10200
Retaining cable with loop 03199-....
Key ring 03199-15/19/23
Bushing for ball lock pins 03197....

Order No.	B	D	D1	D2	D3	L	L1	L2	L3	Receiving hole H11	Shearing force double shear max.kN
03422-204605* **	17,6	46	5	5,5	13,2	10/15/20/25/30	5,9	25	19,4	5	15
03422-204606* **	17,6	46	6	6,85	13,2	10/15/20/25/30/35/40/45/50	6,8	25	19,4	6	22
03422-206308* **	23	62,9	8	9,5	17,3	20/25/30/35/40/45/50	7,8	33	24,4	8	38
03422-206310* **	23	62,9	10	12	17,3	20/25/30/35/40/45/50/60	8,9	33	24,4	10	60
03422-208212* **	33	81,8	12	14,5	26,3	25/30/35/40/45/50/60/70/80	9,9	39,5	28,8	12	86
03422-208216* **	33	81,8	16	19	26,3	30/35/40/45/50/60/70/80	13,1	39,5	28,8	16	153

Notes

04000

Clamp straps
Clamping devices

Clamp straps

slotted heel

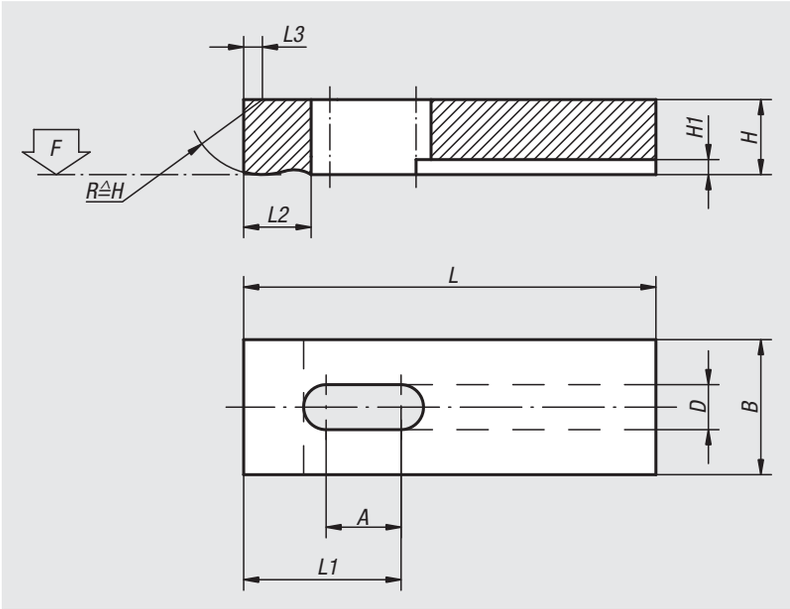

Material:
Carbon steel 1.1191

Version:
Black oxidised.

Sample order:
nlm 04010-101

Note:
For suitable supports and adjustable rest pads, see 02130 and 02150.

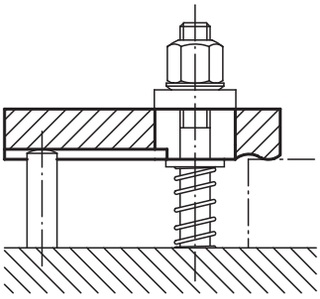

Order No.	A	B	D	H	H1	L	L1	L2	L3	F kN
04010-05	8	12	5,5	8	3	32	14	8	1,2	3,42
04010-051	13	12	5,5	8	3	50	23	8	1,2	3,42
04010-06	10	16	7	10	3	40	17	10	1,6	4,82
04010-061	17	16	7	10	3	63	29	10	1,6	4,82
04010-08	12	20	9	12	4	50	22	12	2	8,77
04010-081	21	20	9	12	4	80	37	12	2	8,77
04010-10	16	25	11	16	4,5	63	28	16	2,5	13,9
04010-101	26	25	11	16	4,5	100	46	16	2,5	13,9
04010-12	20	32	14	20	5	80	35	20	3	20,2
04010-121	33	32	14	20	5	125	58	20	3	20,2
04010-14	25	40	16	25	6	100	44	25	4	27,6
04010-141	42	40	16	30	6	160	74	25	4	27,6
04010-16	42	50	18	30	6	160	73	32	5	37,8
04010-20	52	60	22	30	8	200	92	40	6	58,8

Clamp straps

swivel-heel

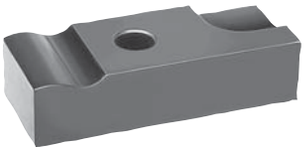

Material:
Carbon steel 1.1191

Version:
Black oxidised.

Sample order:
nlm 04030-10

Note:
Recommended clamp supports: 02130 and 02150.

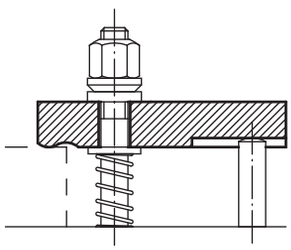

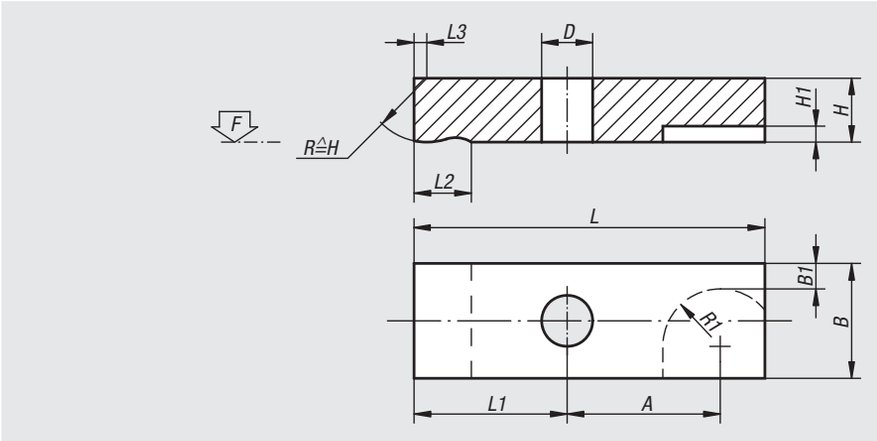

Order No.	L	L1	L2	L3	B	B1	H	H1	D	A	R1	F kN
04030-05	32	14	8	1,2	12	2,5	8	3	5,5	14	7	3,42
04030-06	40	17	10	1,6	16	4	10	3	7	18	8	4,82
04030-08	50	22	12	2	20	5	12	4	9	22	10	8,77
04030-10	63	28	16	2,5	25	6,5	16	4	11	27	12	13,9
04030-12	80	35	20	3	32	9	20	5	14	35	14	20,2
04030-14	100	44	25	4	40	12	25	6	16	44	16	27,6
04030-16	125	55	32	5	50	16	30	6	18	54	18	37,8
04030-20	160	75	40	6	60	20,5	30	8	22	65	22	58,8

Clamp straps

tapped-heel

Material:
Carbon steel 1.1191

Version:
Black oxidised.

Sample order:
nlm 04050-08

Note:
When using spherical washers use the wide series 07420 Form G.

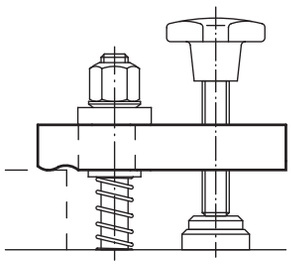

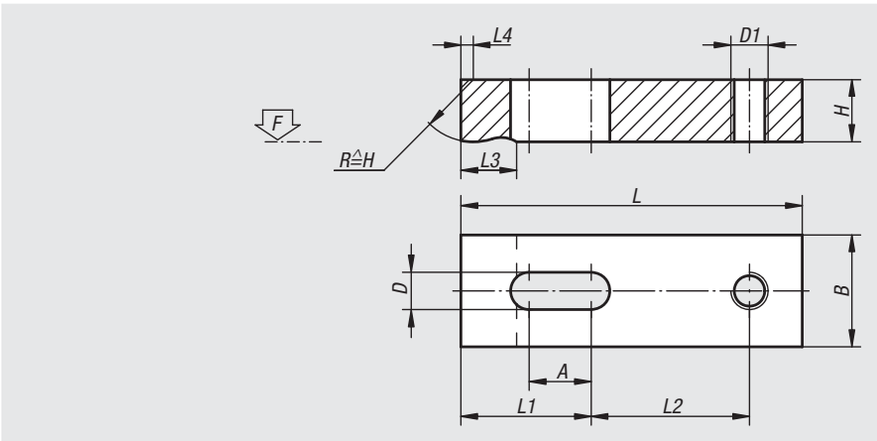

Order No.	L	L1	L2	L3	L4	B	H	D	D1	A	F kN
04050-05	40	18	18	8	1,2	12	8	5,5	M6	10	3,42
04050-06	50	22	23	10	1,6	16	10	7	M6	12	4,82
04050-08	63	28	29	12	2	20	12	9	M8	16	8,77
04050-10	80	36	36	16	2,5	25	16	11	M10	20	13,9
04050-12	100	45	45	20	3	32	20	14	M12	25	20,2
04050-14	125	57	56	25	4	40	25	16	M14	32	27,6
04050-16	160	72	72	32	5	50	30	18	M16	40	37,8
04050-20	200	90	90	40	6	60	30	22	M20	50	58,8

Clamp straps

stepped-heel, steel or aluminium

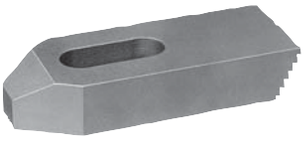

Material:
Carbon steel or EN AW-7022.

Version:
Painted, aluminium bright.

Sample order:
nlm 04070-12

Note:
Use only with step blocks 02270.

When using spherical washers 07420 use Form G.

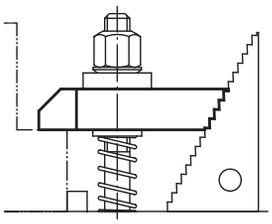

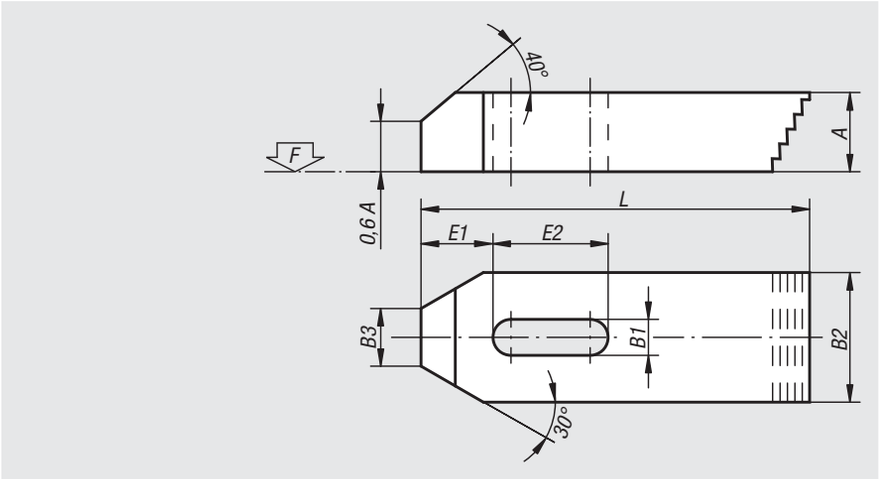

Order No. high carbon steel	Order No. aluminium	L	A	B1	B2	B3	E1	E2	F kN	for screw
04070-06	**04070-206**	50	10	7	20	8	10	20	4,82	M6
04070-08	**04070-208**	60	12	9	25	10	13	22	8,77	M8
04070-10	**04070-210**	80	15	11	30	12	15	30	13,9	M10
04070-12	**04070-212**	100	20	14	40	14	21	40	20,2	M12/M14
04070-16	**04070-216**	125	25	18	50	18	26	45	37,8	M16/M18
04070-20	**04070-220**	160	30	22	60	22	30	60	58,8	M20/M22
04070-24	**04070-224**	200	30	26	70	26	35	80	84,7	M24

Example of a fixture using almost exclusively norelem parts:

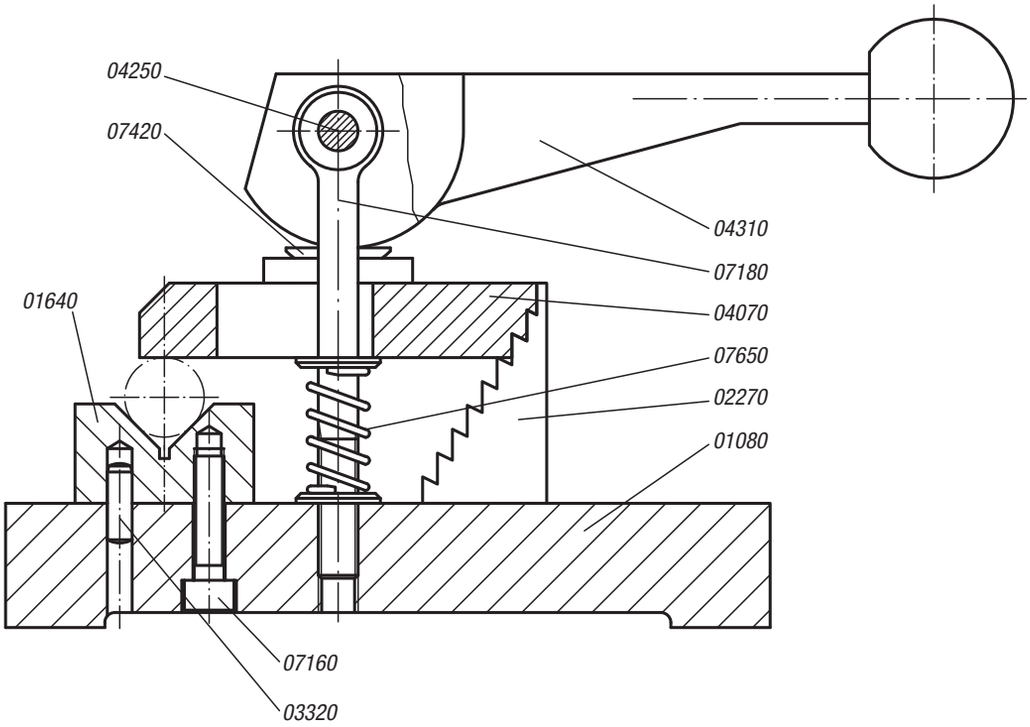

Clamp straps

DIN 6314 straight, steel or aluminium

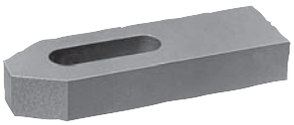

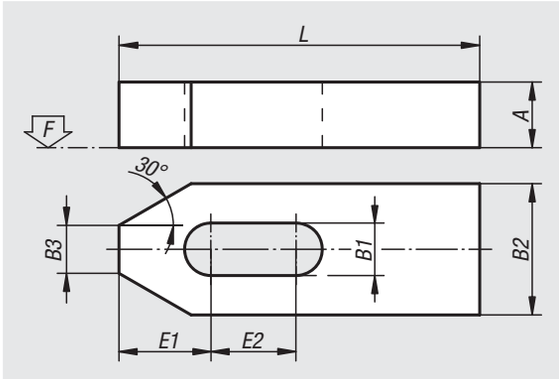

Material:
Carbon steel or EN AW-7022.

Version:
Painted, aluminium bright.

Sample order:
nlm 04080-16

Note:
When using spherical washers use the wide series 07420 Form G.

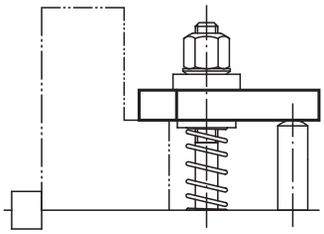

Order No. high carbon steel	Order No. aluminium	L	A	B1	B2	B3	E1	E2	F kN	for screw
04080-06	**04080-206**	50	10	7	20	8	13,5	13	4,82	M6
04080-08	**04080-208**	60	12	9	25	10	14,5	13	8,77	M8
04080-10	**04080-210**	80	15	11	30	12	20,5	19	13,9	M10
04080-12	**04080-212**	100	20	14	40	14	28	26	20,2	M12/M14
04080-14	**04080-214**	125	20	14	40	14	28	36	20,2	M12/M14
04080-16	**04080-216**	125	25	18	50	18	35	27	37,8	M16/M18
04080-18	**04080-218**	160	25	18	50	18	35	47	37,8	M16/M18
04080-20	**04080-220**	160	30	22	60	22	41	38	58,8	M20/M22
04080-201	**04080-2201**	200	30	22	60	22	41	58	58,8	M20/M22
04080-24	**04080-224**	200	30	26	70	26	48	54	84,7	M24
04080-241	**04080-2241**	250	35	26	70	26	48	79	84,7	M24
04080-30	**04080-230**	250	40	34	80	34	62	66	135	M30/M32
04080-301	**04080-2301**	315	50	34	80	34	62	96	135	M30/M32

Clamp straps

with flattened ball

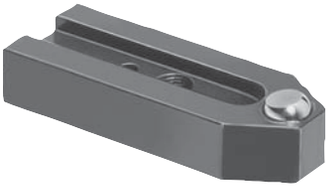

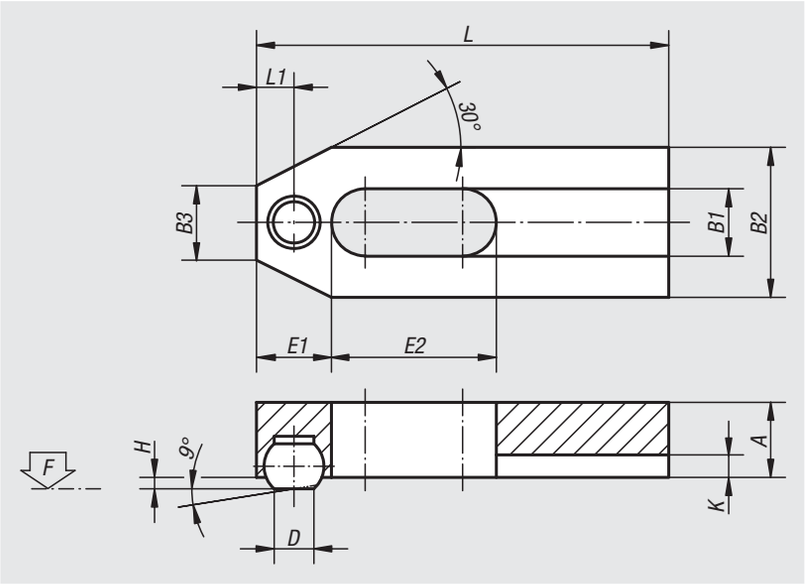

Material:
Straps carbon steel.
Balls roller bearing steel.

Version:
Strap black oxidised.
Ball hardened, bright.

Sample order:
nlm 04081-08

Note:
When using spherical washers 07420 use Form G.
Ball secured against rotation.

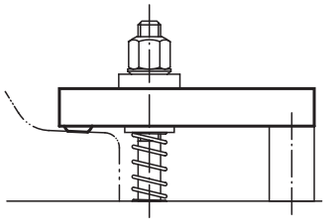

Order No.	L	L1	A	B1	B2	B3	D	H	K	Ball-Ø	E1	E2	F kN	for screw
04081-06	50	5	10	7	20	8	5,5	1,6	2,5	8,5	10	20	4,82	M6
04081-08	60	6,5	12	9	25	10	7,2	2	3	10	13	22	8,77	M8
04081-10	80	7,5	15	11	30	12	8,6	2,7	3,5	12	15	30	13,9	M10
04081-12	125	10,5	20	13	40	14	10,5	3,5	4	16	21	50	20,2	M12

Clamp straps gooseneck

narrow, steel

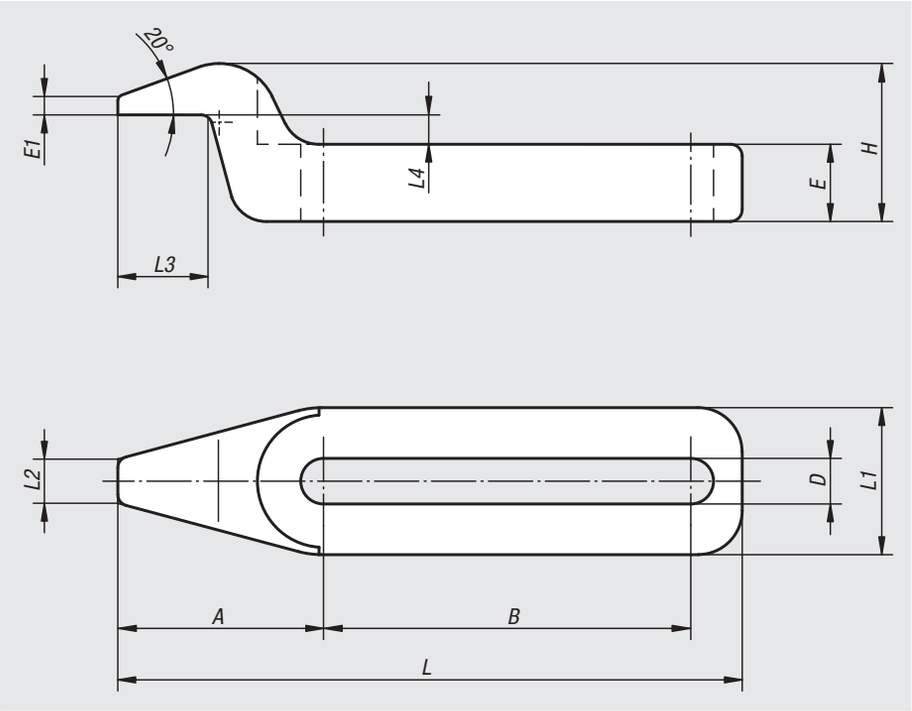

Material:
Carbon steel.

Version:
Tempered and black oxidised.

Sample order:
nlm 04088-06010

Note:
The flat gooseneck allows lower steps on the workpiece to be machined or clamped. When using spherical washers 07420 use Form G.

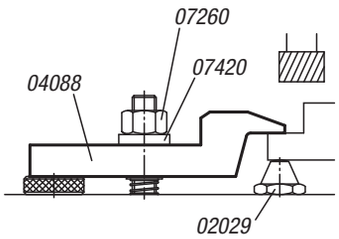

Order No.	A	B	D	E	E1	H	L	L1	L2	L3	L4	Clamping force kN
04088-06005	28	32	6,2	7,5	2,5	18,5	67	20	6	12,5	4	4,82
04088-06010	28	50	6,2	10,5	2,5	21,5	85	20	6	12,5	4	4,82
04088-08005	28	32	8,2	7,5	2,5	18,5	67	20	6	12,5	4	8,77
04088-08010	28	50	8,2	10,5	2,5	21,5	85	20	6	12,5	4	8,77
04088-10005	45	50	10,2	12	4	30	105	30	10	20	6	13,9
04088-10010	45	80	10,2	17	4	35	135	30	10	20	6	13,9
04088-12005	45	50	12,2	12	4	30	105	30	10	20	6	20,2
04088-12010	45	80	12,2	17	4	35	135	30	10	20	6	20,2
04088-16005	72	80	16,2	19	7	48	168	48	16	32	9,5	37,8
04088-16010	72	128	16,2	27	7	56	216	48	16	32	9,5	37,8
04088-20005	72	80	20,2	19	7	48	168	48	16	32	9,5	58,8
04088-20010	72	128	20,2	27	7	56	216	48	16	32	9,5	58,8

Clamp straps gooseneck

DIN 6316 wide, steel or aluminium

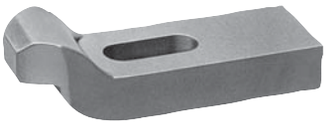

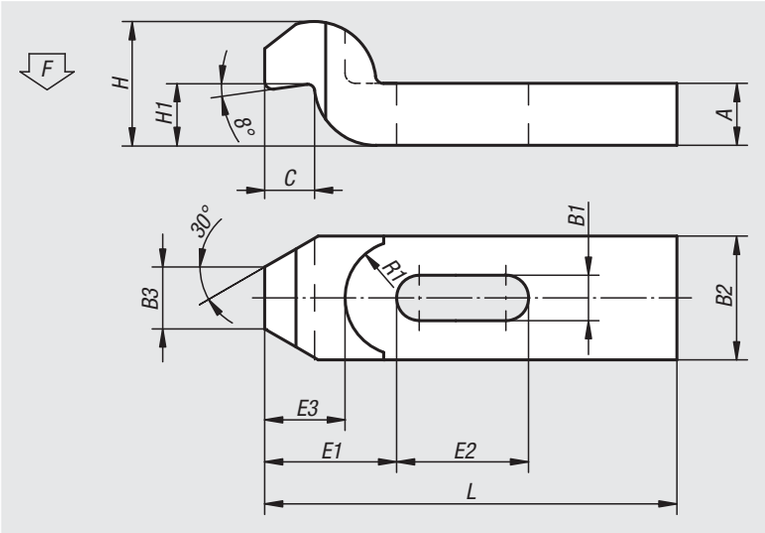

Material:
Carbon steel or EN AW-7022.

Version:
Painted, aluminium bright.

Sample order:
nlm 04090-10

Note:
When using spherical washers use the wide series 07420 Form G.

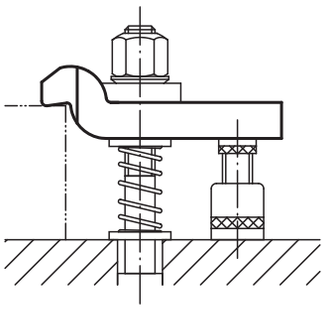

Order No. high carbon steel	Order No. aluminium	L	B1	B2	B3	H max.	H1	A	C	E1	E2	E3	R1	F kN	for screw
04090-06	**04090-206**	60	7	20	10	20	9	10	8	20	20	14	11	4,82	M6
04090-08	**04090-208**	80	9	25	12	24	11	12	9	25	25	17	14	8,77	M8
04090-10	**04090-210**	100	11	30	15	30	14	15	12	32	32	22	18	13,9	M10
04090-12	**04090-212**	125	14	40	20	40	18	20	16	40	40	28	20	20,2	M12/M14
04090-16	**04090-216**	125	18	50	25	46	23	25	20	49	40	38	25	37,8	M16/M18
04090-161	**04090-2161**	160	18	50	25	46	23	25	20	49	50	38	25	37,8	M16/M18
04090-20	**04090-220**	160	22	60	30	60	28	30	24	55	55	40	28	58,8	M20/M22
04090-201	**04090-2201**	200	22	60	30	60	28	30	24	55	70	40	28	58,8	M20/M22
04090-24	**04090-224**	200	26	70	35	70	32	35	28	72	60	54	34	84,7	M24
04090-241	**04090-2241**	250	26	70	35	70	32	35	28	72	80	54	34	84,7	M24
04090-30	**04090-230**	250	34	80	40	80	37	40	40	91	80	72	40	135	M30/M32
04090-301	**04090-2301**	315	34	80	40	100	56	50	40	91	100	72	40	135	M30/M32

Clamp straps

assorted, long slot

Material:
Carbon steel 1.7225

Version:
Tempered to 1000 N/mm², black oxidised.

Sample order:
nlm 04100-10

Note:
These clamp straps with long slot are also used with the compact clamp strap module 04200.

04100-01 (0,5 kg)

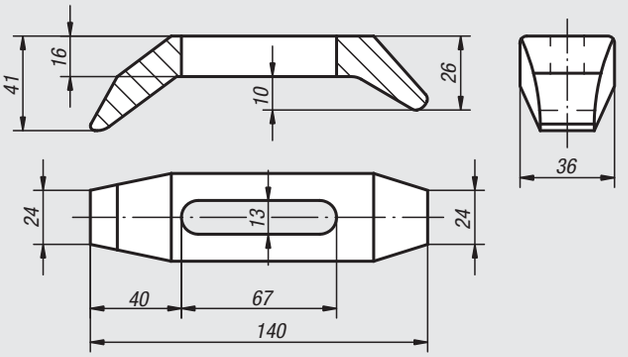

04100-05 (0,48 kg)

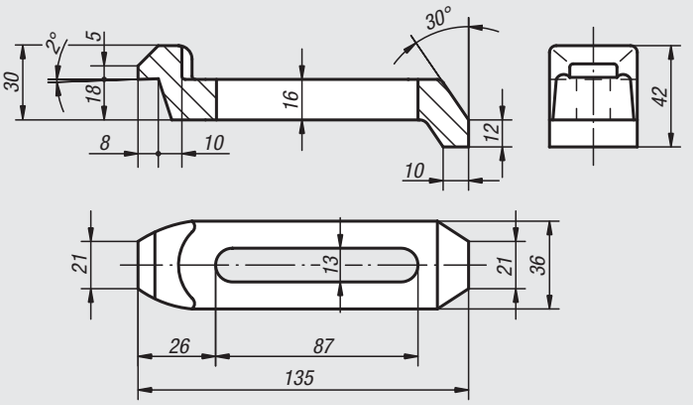

04100-10 (0,35 kg)

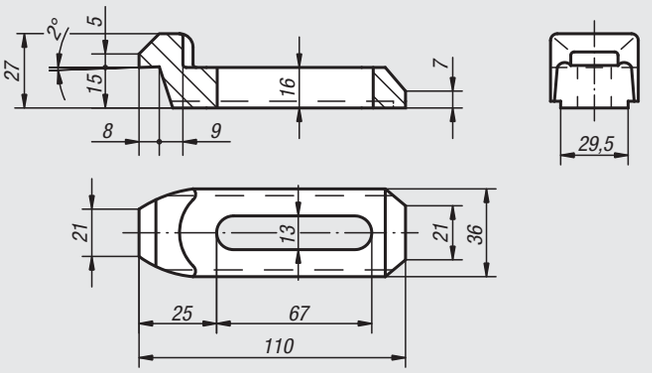

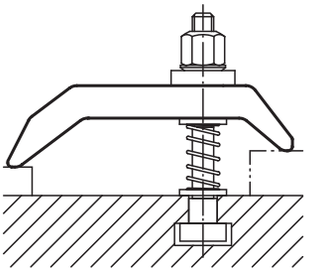

Order No.	Description
04100-01	Inverted strap
04100-05	Invert/Gooseneck strap
04100-10	Gooseneck strap

Clamp straps open U

DIN 6315, steel or aluminium

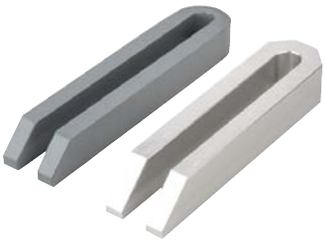

Material:
Carbon steel or EN AW-7022.

Version:
Painted, aluminium bright.

Sample order:
nlm 04110-06

Note:
When using spherical washers use the wide series 07420 Form G.

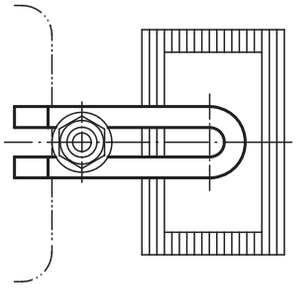

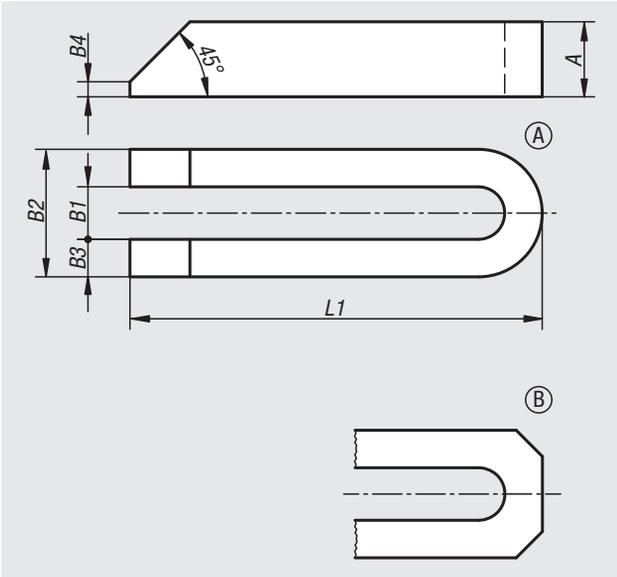

Order No.	Main material	Form	L1	A	B1	B2	B3	B4	for screw
04110-06	high carbon steel	A	60	12	6,6	18	6	3	M6
04110-08	high carbon steel	A	80	15	9	25	8	4	M8
04110-10	high carbon steel	A	100	20	11	31	10	5	M10
04110-12	high carbon steel	A	125	25	14	38	12	6	M12/M14
04110-121	high carbon steel	A	160	25	14	38	12	6	M12/M14
04110-122	high carbon steel	A	200	25	14	38	12	6	M12/M14
04110-16	high carbon steel	A	160	30	18	48	15	8	M16/M18
04110-161	high carbon steel	A	200	30	18	48	15	8	M16/M18
04110-162	high carbon steel	A	250	40	18	48	15	10	M16/M18
04110-20	high carbon steel	A	200	40	22	52	15	10	M20/M22
04110-201	high carbon steel	A	250	40	22	62	20	10	M20/M22
04110-202	high carbon steel	A	315	40	22	62	20	10	M20/M22
04110-24	high carbon steel	A	200	40	26	66	20	10	M24
04110-241	high carbon steel	A	250	40	26	66	20	10	M24
04110-242	high carbon steel	A	315	40	26	66	20	10	M24
04110-301	high carbon steel	A	250	50	34	74	20	12	M30/M32
04110-30	high carbon steel	A	315	50	33	73	20	12	M30/M32
04110-302	high carbon steel	A	400	50	33	73	20	12	M30/M32
04110-40	high carbon steel	A	400	60	40	100	30	12	M36
04110-401	high carbon steel	A	600	60	40	100	30	12	M36
04110-206	aluminium	B	60	12	7	19	6	3	M6
04110-208	aluminium	B	80	15	9	25	8	4	M8
04110-210	aluminium	B	100	20	11	31	10	5	M10
04110-212	aluminium	B	125	25	14	38	12	6	M12/M14
04110-2121	aluminium	B	160	28	14	38	12	6	M12/M14
04110-216	aluminium	B	160	30	18	48	15	8	M16/M18
04110-2161	aluminium	B	200	36	18	48	15	8	M16/M18
04110-220	aluminium	B	200	40	22	52	15	10	M20/M22
04110-2201	aluminium	B	250	40	22	62	20	10	M20/M22
04110-224	aluminium	B	200	40	26	66	20	10	M24
04110-2241	aluminium	B	250	40	26	66	20	10	M24
04110-230	aluminium	B	315	50	34	74	20	12	M30/M32

Clamp straps open U

flat pin, steel or aluminium

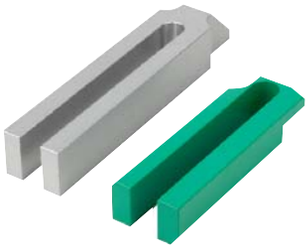

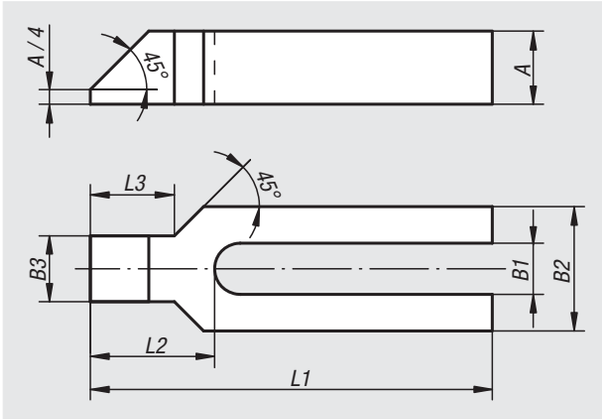

Material:
Carbon steel or EN AW-7022.

Version:
Painted, aluminium bright.

Sample order:
nlm 04130-12

Note:
When using spherical washers use the wide series 07420 Form G.

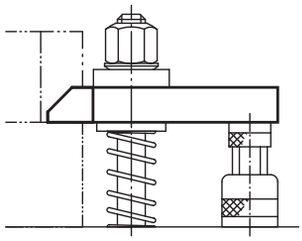

Order No.	Main material	L1	A	B1	B2	B3	L2	L3	for screw
04130-08	high carbon steel	100	15	9	30	16	32	18	M8
04130-10	high carbon steel	125	20	11	30	20	38	24	M10
04130-12	high carbon steel	160	25	14	40	24	47	30	M12/M14
04130-121	high carbon steel	200	25	14	40	24	47	30	M12/M14
04130-16	high carbon steel	200	30	18	50	28	57	36	M16/M18
04130-161	high carbon steel	250	30	18	50	28	57	36	M16/M18
04130-20	high carbon steel	250	40	22	60	35	68	45	M20/M22
04130-201	high carbon steel	315	40	22	60	35	68	45	M20/M22
04130-24	high carbon steel	250	40	26	70	43	83	56	M24
04130-241	high carbon steel	315	40	26	70	43	83	56	M24
04130-30	high carbon steel	315	50	34	80	50	88	56	M30/M32
04130-301	high carbon steel	400	50	34	80	50	88	56	M30/M32
04130-208	aluminium	100	15	9	30	16	32	18	M8
04130-210	aluminium	125	20	11	30	20	38	24	M10
04130-212	aluminium	160	28	14	40	24	47	30	M12/M14
04130-2121	aluminium	200	36	14	40	24	47	30	M12/M14
04130-216	aluminium	200	36	18	50	28	57	36	M16/M18
04130-2161	aluminium	250	40	18	50	28	57	36	M16/M18
04130-220	aluminium	250	40	22	60	35	68	45	M20/M22
04130-2201	aluminium	315	48	22	60	35	68	45	M20/M22
04130-224	aluminium	250	40	26	70	43	83	56	M24
04130-2241	aluminium	315	48	26	70	43	83	56	M24
04130-230	aluminium	315	50	34	80	50	88	56	M30/M32
04130-2301	aluminium	400	50	34	80	50	88	56	M30/M32

Clamp straps open-U

with pin and protective insert

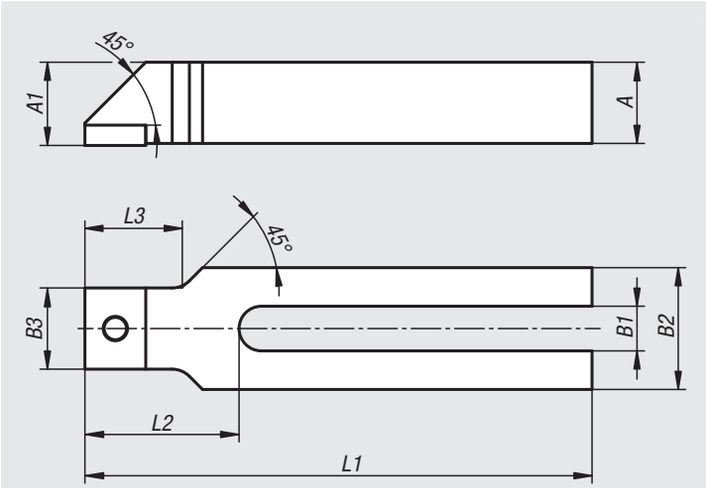

Material:
Carbon steel.
Soft pad POM or polyurethane 99 Shore A.

Version:
Black oxidised.

Sample order:
nlm 04131-110008

Note:
The pressed in plastic inserts offer optimal damage protection for sensitive workpiece faces.

Order No.	Component material	L1	A	A1	B1	B2	B3	L2	L3	for screws
04131-110008	polyacetal	100	15	15,5	9	30	16	32	18	M8
04131-112510	polyacetal	125	20	20,5	11	30	20	38	24	M10
04131-116012	polyacetal	160	25	25,5	14	40	24	47	30	M12
04131-210008	polyurethane	100	15	15,5	9	30	16	32	18	M8
04131-212510	polyurethane	125	20	20,5	11	30	20	38	24	M10
04131-216012	polyurethane	160	25	25,5	14	40	24	47	30	M12

Clamp straps pivot

strap only or assembly

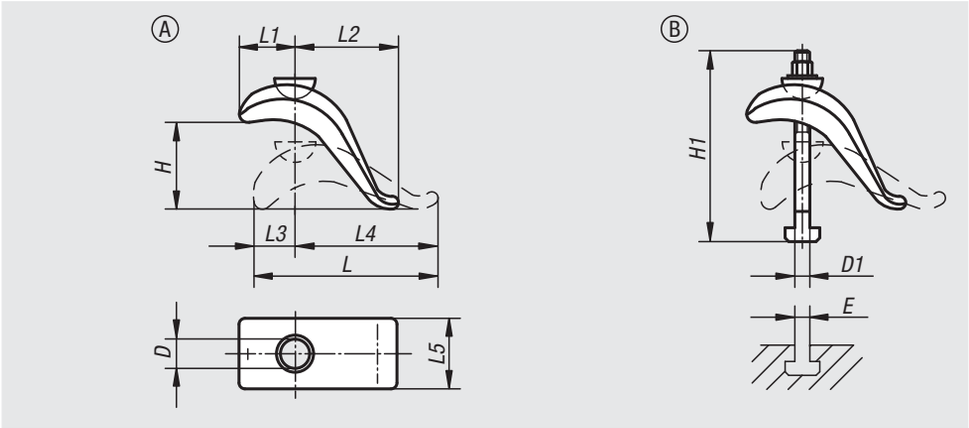

Material:
Steel.

Version:
Forged, tempered and painted.
Bolts, nuts, washers grade 8.8

Sample order:
nlm 04140-010

Note:
The strap provides instant height adjustment without blocks or shims and requires little space on the machine table. Designed for rugged use and highly suitable for clamping blanking and punching dies.

Form A strap only

Order No.	Form	D	H	L	L1	L2	L3	L4	L5	Clamping force kN
04140-010	A	17	75	140	55	60	30	110	50	20,2
04140-020	A	21	85	175	70	80	40	135	60	37,8

Form B with T-slot bolt, nut and washer

Order No.	Form	D	D1	E	H	H1	L	L1	L2	L3	L4	L5	Clamping force kN
04140-030	B	17	M12	12	50	125	140	55	60	30	110	50	20,2
04140-040	B	17	M12	14	50	125	140	55	60	30	110	50	20,2
04140-050	B	17	M16	16	75	160	140	55	60	30	110	50	37,8
04140-060	B	17	M16	18	75	160	140	55	60	30	110	50	37,8
04140-080	B	21	M16	16	65	160	175	70	80	40	135	60	37,8
04140-100	B	21	M16	18	65	160	175	70	80	40	135	60	37,8
04140-120	B	21	M20	22	85	200	175	70	80	40	135	60	58,8

Clamp straps open U

DIN 6315 C, round pin, steel or aluminium

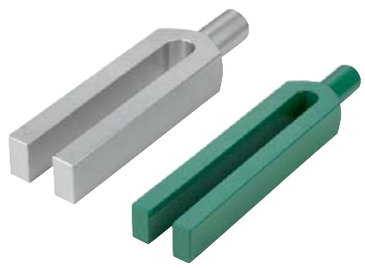

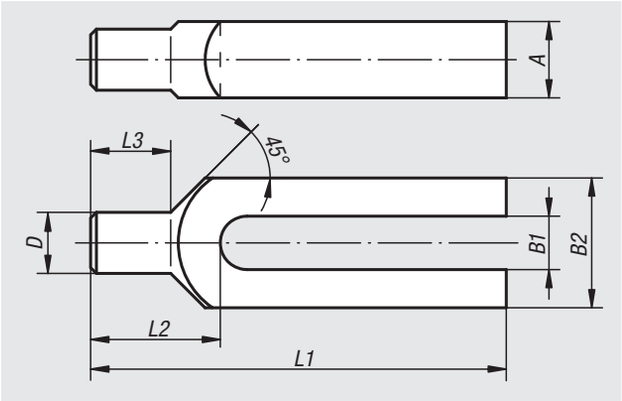

Material:
Carbon steel or EN AW-7022.

Version:
Painted, aluminium bright.

Sample order:
nlm 04150-161

Note:
When using spherical washers 07420 use Form G.

The stated clamping forces are only valid for steel straps.

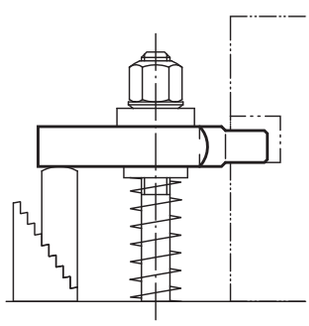

Order No.	Main material	L1	A	B1	B2	D	L2	L3	for screw	Clamping force kN
04150-08	high carbon steel	100	15	9	30	12	30	18	M8	8,77
04150-10	high carbon steel	125	20	11	30	16	36	24	M10	13,9
04150-12	high carbon steel	160	25	14	40	20	45	30	M12/M14	20,2
04150-121	high carbon steel	200	25	14	40	20	45	30	M12/M14	20,2
04150-16	high carbon steel	200	30	18	50	24	55	36	M16/M18	37,8
04150-161	high carbon steel	250	30	18	50	24	55	36	M16/M18	37,8
04150-20	high carbon steel	250	40	22	60	30	65	45	M20/M22	58,8
04150-201	high carbon steel	315	40	22	60	30	65	45	M20/M22	58,8
04150-208	aluminium	100	15	9	30	12	30	18	M8	-
04150-210	aluminium	125	20	11	30	16	36	24	M10	-
04150-212	aluminium	160	28	14	40	20	45	30	M12/M14	-
04150-216	aluminium	200	30	18	50	24	55	36	M16/M18	-
04150-2161	aluminium	250	30	18	50	24	55	36	M16/M18	-
04150-220	aluminium	250	40	22	60	30	65	45	M20/M22	-

04170

Clamp straps

hinge heel

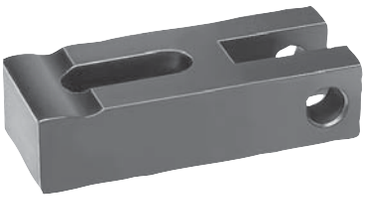

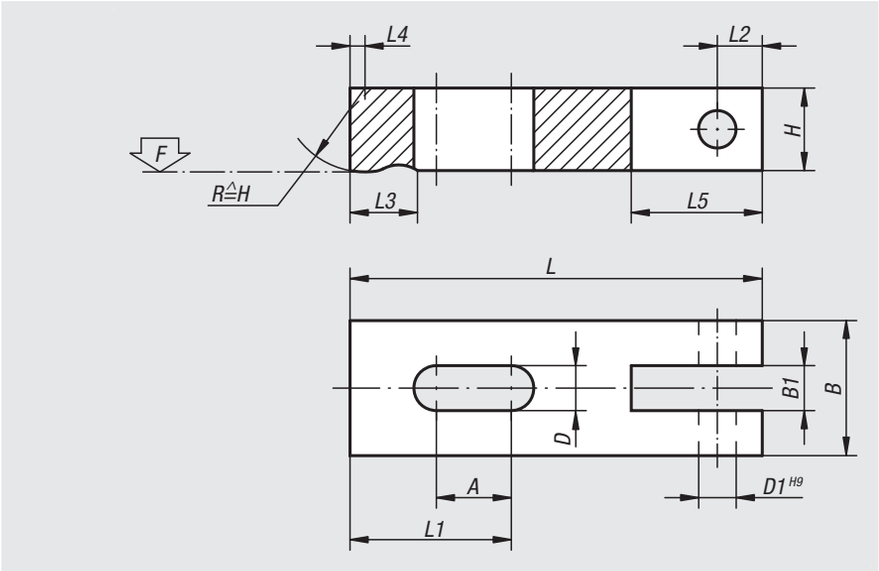

Material:
Carbon steel 1.1191

Version:
Tempered and black oxidised.

Sample order:
nlm 04170-12

Note:
Suitable hinge pins 04250. Cam levers 04290.
When using spherical washers 07420 use Form G.

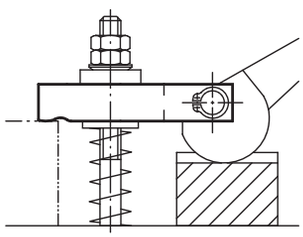

Order No.	L	L1	L2	L3	L4	L5	B	B1	H	D	D1	A	F max. kN
04170-08	63	28	8	12	2	24	25	9,5	16	9	8	16	8,77
04170-10	80	36	10	16	2,5	29	32	12,5	20	11	10	20	13,9
04170-12	100	45	12	22	3	36	40	14,5	25	14	12	25	20,2

04185

Clamp straps mini

double sided

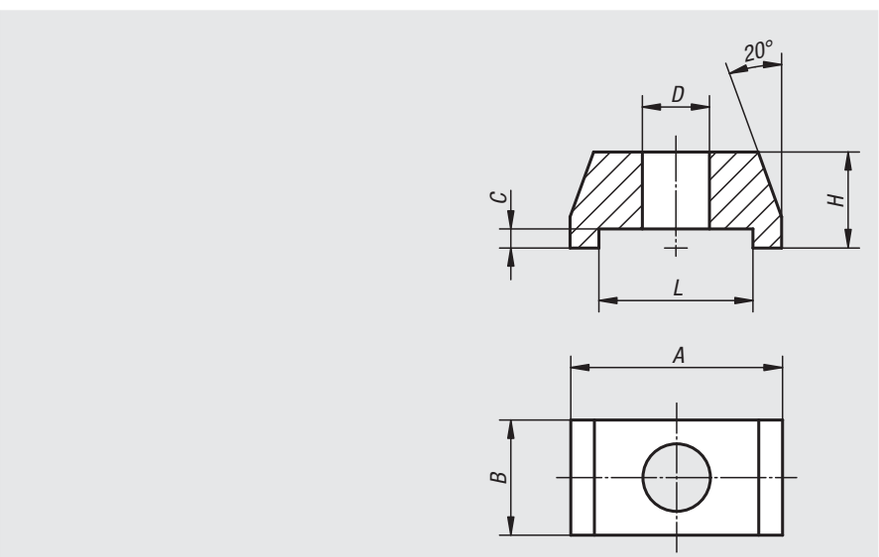

Material:
Steel.

Version:
Black oxidised.

Sample order:
nlm 04185-012

Note:
Two workpieces can be clamped simultaneously from one clamping point using the mini clamp strap.

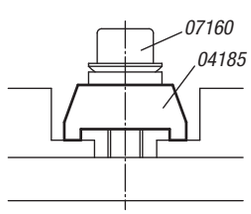

Order No.	A	B	C	D	H	L	Clamping force kN
04185-006	22	12	2	7	10	16	4,82
04185-008	22	12	2	9	10	16	8,77
04185-010	35	19	3	11	15	24	13,9
04185-012	35	19	3	13	15	24	20,2
04185-016	50	29	5	17	25	36	37,8

Clamp straps

double sided

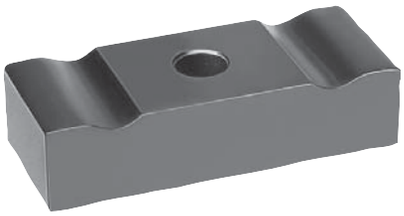

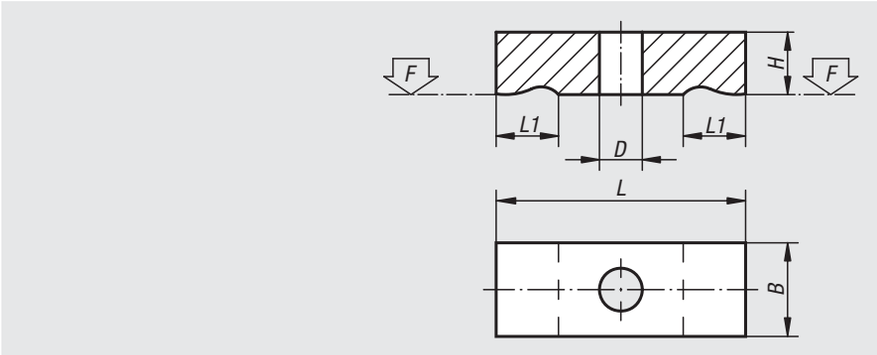

Material:
Carbon steel 1.1191

Version:
Black oxidised.

Sample order:
nlm 04190-12

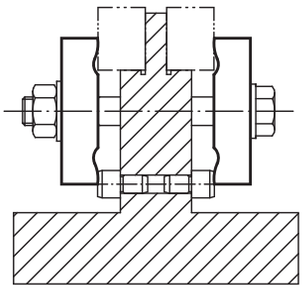

Order No.	L	L1	B	H	D	F kN
04190-05	32	8	12	8	5,5	3,42
04190-06	40	10	16	10	7	4,82
04190-08	50	12	20	12	9	8,77
04190-10	63	16	25	16	11	13,9
04190-12	80	20	32	20	14	20,2
04190-14	100	25	40	25	16	27,6
04190-16	125	32	50	30	18	37,8
04190-20	160	40	60	30	22	58,8

Notes

Clamp straps

double-sided, 90° swivelling

Material:
Carbon steel.

Version:
Tempered and black oxidised.

Sample order:
nlm 04191-1640

Note:
The double-sided clamp straps are ideal for series clamping.
For special applications, the clamping flange can be replaced with another clamping flange by loosening the clamping screw. The clamping flange must always have a contact point on both sides.

Functional principle:
1. Use a hand-held or electric tool to tighten the hexagon head bolt (make sure that the maximum tightening torque is not exceeded). When clamping, the clamping flange automatically turns by quarter of a rotation and starts the clamping stroke.

2. Use reverse procedure to loosen the hexagon head bolt. The clamping flange automatically returns to its starting position (the set screw can be used to change the position of the clamping flange).

Drawing reference:
1) Hexagon head bolt
2) Slotted round nut
3) Set screw

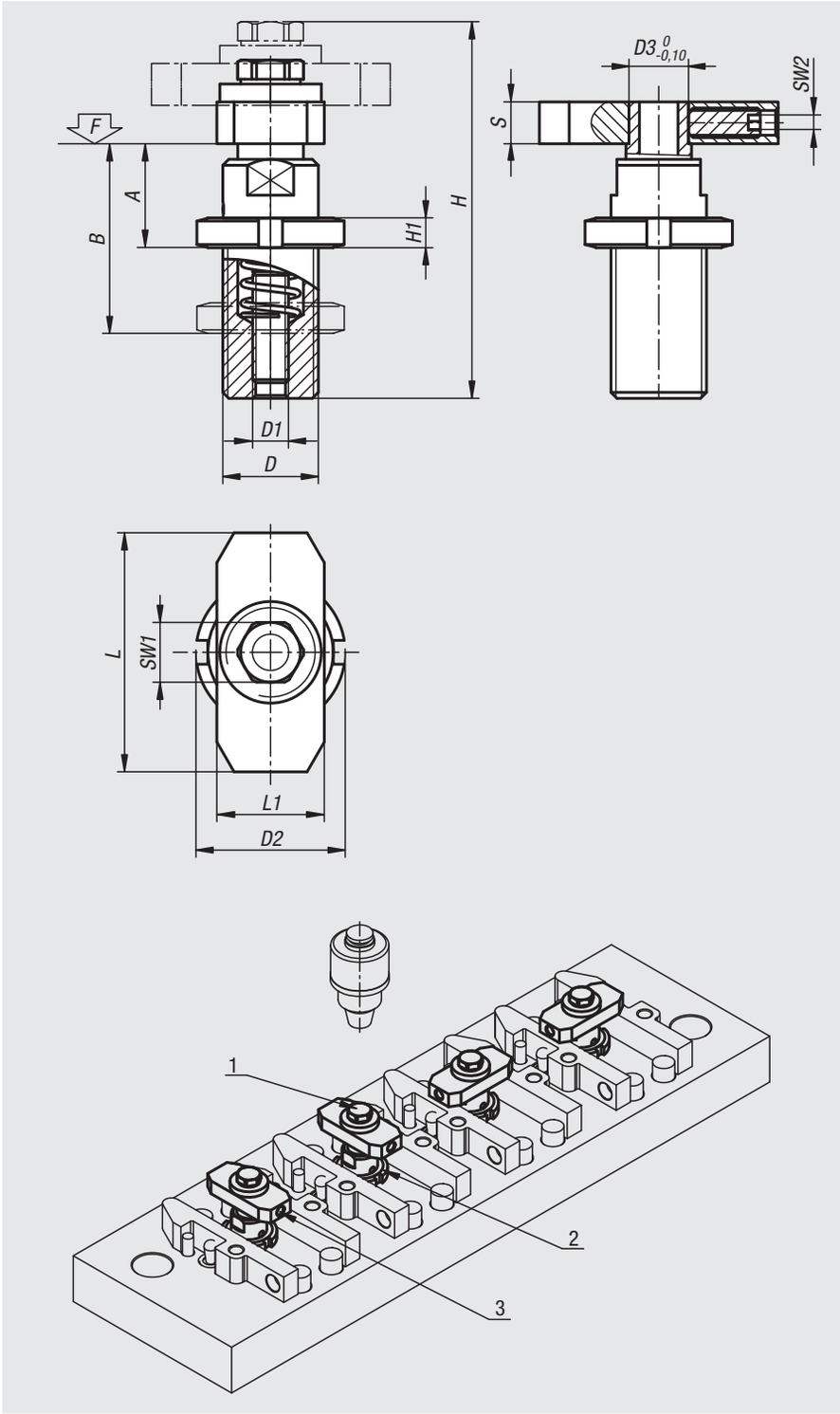

Order No.	D	D1	D2	D3	A	B	S	H	H1	L	L1	SW1	SW2	Tightening torque max. Nm	F max. kN
04191-1640	M16x1	M6	25	10	15	25	7	61	5	40	18	10	2,5	10,4	8,97
04191-2460	M24x2	M8	36	14	22	35	9	87	7	60	28	13	3	25,3	16,5

Clamp strap assemblies

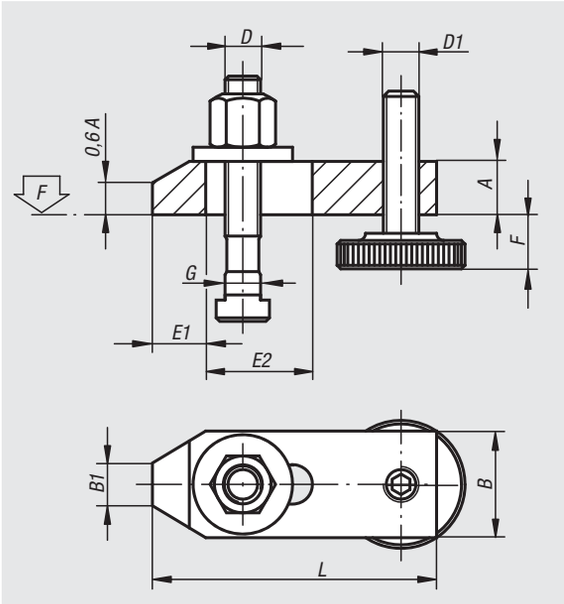

Material:
Carbon steel.
Screws tempered to 8.8.

Version:
Clamp painted. Screws black oxidised.

Sample order:
nlm 04192-1616

Note:
“F” is dependent on the depth of the DIN 650 slot.

Order No.	L	A	B	B1	E1	E2	F	G for T-slot	D	D1	F kN
04192-1010	80	15	30	12	15	30	8-32	10	M10x80	M10	13,9
04192-1212	100	20	40	14	21	40	10-40	12	M12x100	M12	20,2
04192-1214	100	20	40	14	21	40	10-38	14	M12x100	M12	20,2
04192-1616	125	25	50	18	26	45	13-49	16	M16x125	M16	37,8
04192-1618	125	25	50	18	26	45	13-46	18	M16x125	M16	37,8
04192-2020	160	30	60	22	30	60	16-65	20	M20x160	M20	58,8
04192-2022	160	30	60	22	30	60	16-65	22	M20x160	M20	58,8

Clamp strap assemblies

goose-neck

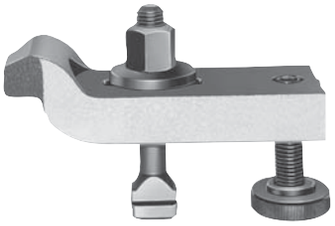

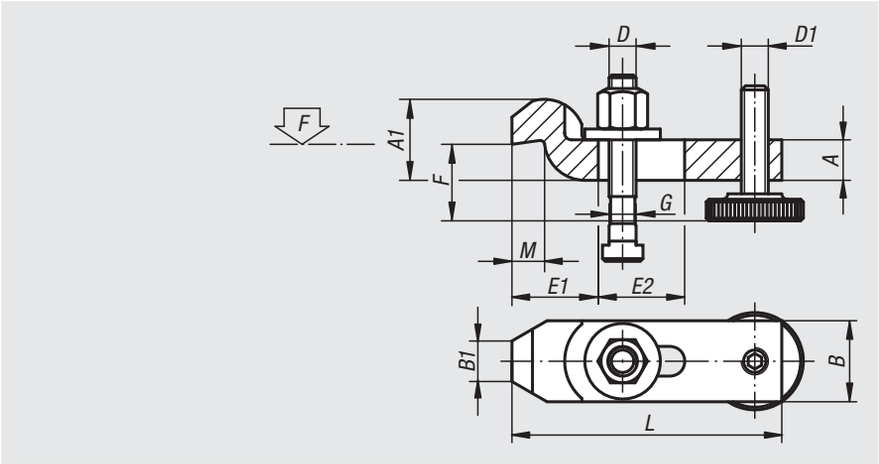

Material:
Carbon steel.
Screws tempered to 8.8.

Version:
Straps painted.
Screws black oxidised.

Sample order:
nlm 04193-1616

Note:
"F" is dependent on the depth of the DIN 650 slot.

Order No.	L	A	A1	B	B1	E1	E2	F	G for T-slot	D	D1	M	F kN
04193-1010	100	15	30	30	15	32	32	22-46	10	M10x80	M10	12	13,9
04193-1212	125	20	40	40	20	40	40	28-58	12	M12x100	M12	16	20,2
04193-1214	125	20	40	40	20	40	40	28-56	14	M12x100	M12	16	20,2
04193-1616	160	25	50	50	25	49	50	36-72	16	M16x125	M16	20	37,8
04193-1618	160	25	50	50	25	49	50	36-69	18	M16x125	M16	20	37,8
04193-2020	200	30	60	60	30	55	70	43-92	20	M20x160	M20	24	58,8
04193-2022	200	30	60	60	30	55	70	43-92	22	M20x160	M20	24	58,8

Clamp springs

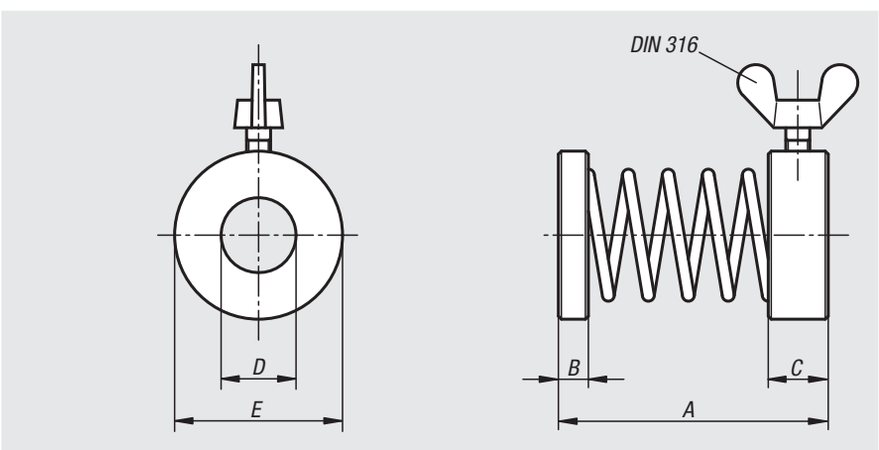

Material:
Thrust and retaining ring carbon steel.
Spring, spring steel.

Version:
Thrust and retaining ring black oxidised.
Spring bright.

Sample order:
nlm 04195-12046

Order No.	A	B	C	D	E	Wing nuts to DIN 316
04195-08029	29	2	6	8,5	16	M4x6
04195-12046	46	3	8	13	25	M4x10
04195-16050	50	4	8	16,5	28	M5x10

Clamp strap modules

compact

Material:
Base, ductile iron.
Clamp strap and clamping screw carbon steel.

Version:
Black oxidised.

Sample order:
nlm 04200-40X16 (include dimension B)

Note:
These clamp strap modules are universal, flexible clamps constructed from individual components building a compact unit. There are no loose parts which first have to be altered for a clamping operation. The compact design allows these clamps to be placed close to the workpiece enabling the full area of the machine table to be used.

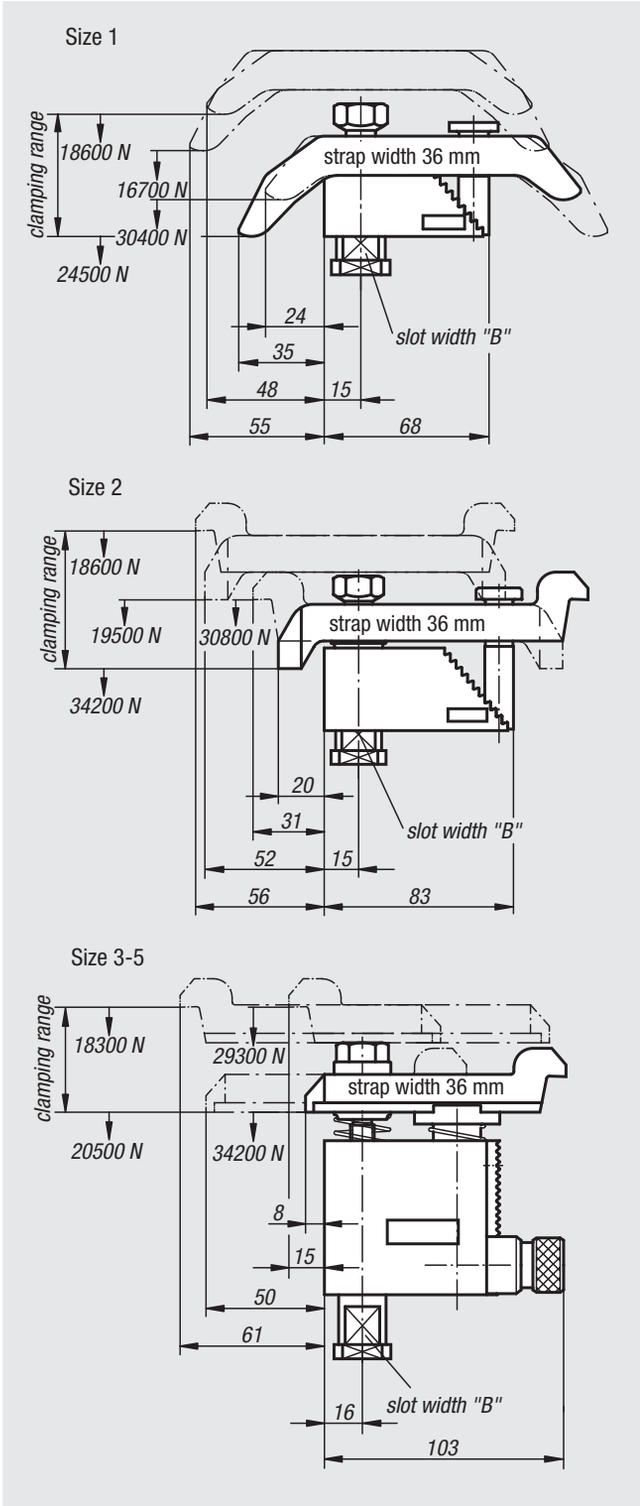

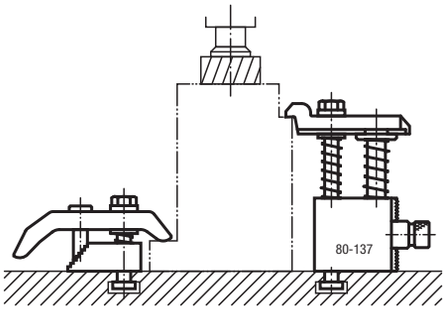

Order No.	Size	Clamp range	Slot width B DIN 650
04200-10X	1	0-35	12/14/16/18
04200-20X	2	25-85	12/14/16/18
04200-30X	3	80-137	12/14/16/18
04200-40X	4	125-224	12/14/16/18
04200-50X	5	160-300	12/14/16/18

Notes

Clamp strap assemblies

Material:
Steel.

Version:
Form A: Tempered and galvanized.

Form B: Tempered and galvanized.
Complete with DIN 787 screw for T-slots, DIN 6340 washer and DIN 6330B nut.

Form C: Tempered and galvanized.
Complete with DIN 6379 stud, DIN 6340 washer and DIN 6330B nut.

Sample order:
nlm 04203-113115

Note:
These clamp strap assemblies can be quickly and infinitely adapted to the clamping situation. The clamp straps have different heel types both sides enabling the best end to be selected depending on the specific application. These extremely versatile clamp straps are suitable for use by metal cutting or non-cutting machining and also for press and injection-moulding applications.

Accessories:
04204 adjustable heel supports

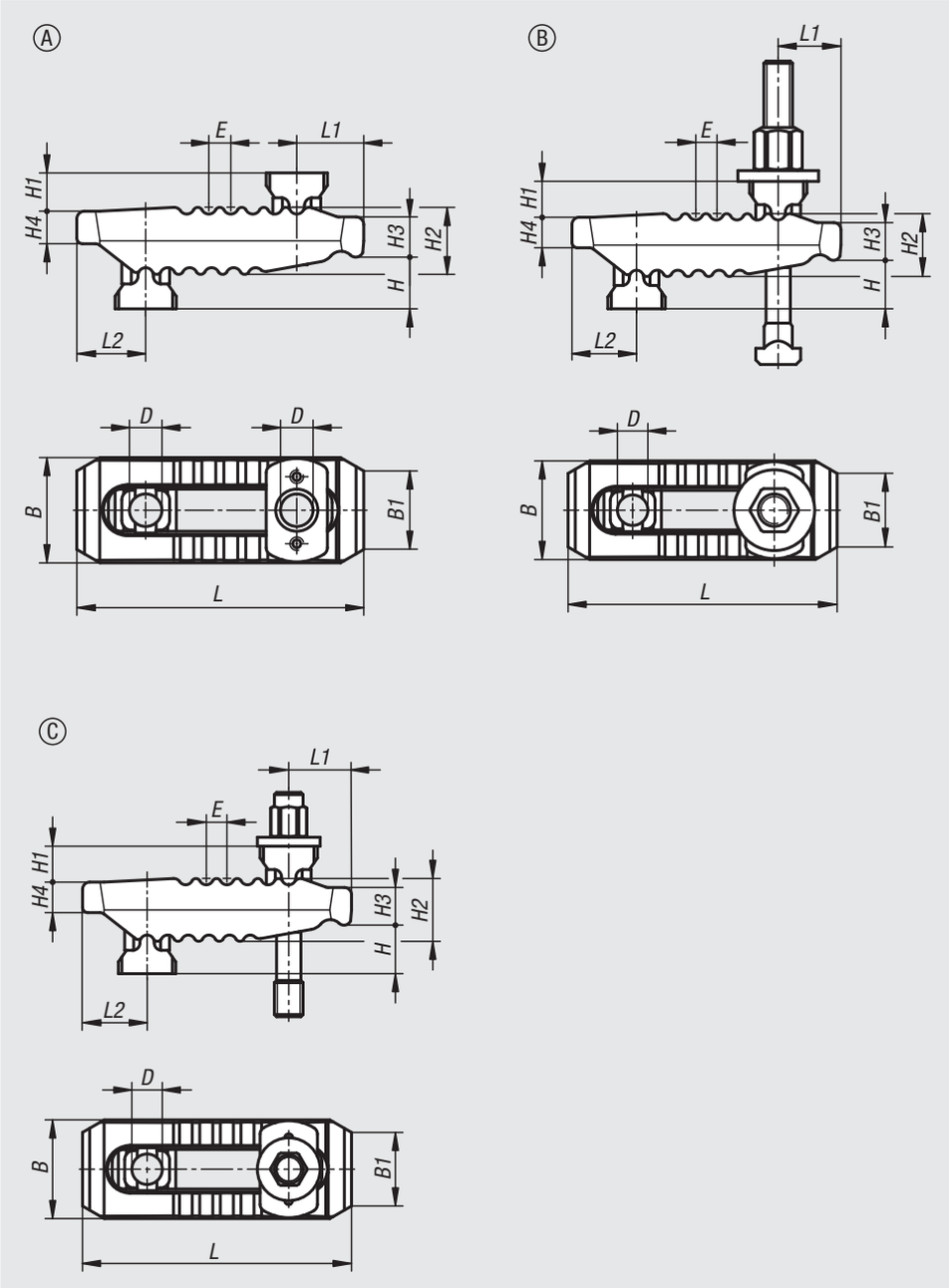

Clamp strap assemblies

Order No.	Form	B	B1	D	E	H clamping range	H1	H2	H3	H4	L	L1	L2	Nominal slot size	Clamping force kN
04203-113115	A	44	30	13	11	0-55	18	27	17	12	115	25	30	10-12-14	30
04203-117150	A	55	41	17	12	0-70	20	36	21	17	150	35	36	12-14-16-18	40
04203-121187	A	62	30	21	14	0-80	30	42	27	20	187	44	44	16-18-20-22	60
04203-125235	A	70	30	25	17	0-100	31	51	34	24	235	60	47	20-22-24-28	75
04203-125285	A	73	30	25	17	0-100	35	56	35	24	285	62	51	20-22-24-28	75

Order No. with T-slot nut	Form	B	B1	D	E	H clamping range	H1	H2	H3	H4	L	L1	L2	Nominal slot size	Fastening screw(s)	Clamping force kN
04203-210115100	B	44	30	13	11	0-40	18	27	17	12	115	25	30	10	M10X100	25
04203-212115125	B	44	30	13	11	0-55	18	27	17	12	115	25	30	12	M12X125	30
04203-214115125	B	44	30	13	11	0-55	18	27	17	12	115	25	30	14	M12X125	30
04203-212150160	B	55	41	17	12	0-70	20	36	21	17	150	35	36	12	M12X160	35
04203-214150160	B	55	41	17	12	0-70	20	36	21	17	150	35	36	14	M12X160	35
04203-216150160	B	55	41	17	12	0-70	20	36	21	17	150	35	36	16	M16X160	40
04203-218150160	B	55	41	17	12	0-70	20	36	21	17	150	35	36	18	M16X160	40
04203-216187200	B	62	30	21	14	0-80	30	42	27	20	187	44	44	16	M16X200	55
04203-218187200	B	62	30	21	14	0-80	30	42	27	20	187	44	44	18	M16X200	55
04203-220187200	B	62	30	21	14	0-80	30	42	27	20	187	44	44	20	M20X200	60
04203-222187200	B	62	30	21	14	0-80	30	42	27	20	187	44	44	22	M20X200	60
04203-220235250	B	70	30	25	17	0-100	31	51	34	24	235	60	47	20	M20X250	70
04203-222235250	B	70	30	25	17	0-100	31	51	34	24	235	60	47	22	M20X250	70
04203-224235250	B	70	30	25	17	0-100	31	51	34	24	235	60	47	24	M24X250	75
04203-228235250	B	70	30	25	17	0-100	31	51	34	24	235	60	47	28	M24X250	75

Order No. with stud	Form	B	B1	D	E	H clamping range	H1	H2	H3	H4	L	L1	L2	Fastening screw(s)	Clamping force kN
04203-312115100	C	44	30	13	11	0-30	18	27	17	12	115	25	30	M12X100	30
04203-312115125	C	44	30	13	11	0-55	18	27	17	12	115	25	30	M12X125	30
04203-312150125	C	55	41	17	12	0-50	20	36	21	17	150	35	36	M12X125	40
04203-312150160	C	55	41	17	12	0-70	20	36	21	17	150	35	36	M12X160	40
04203-316150125	C	55	41	17	12	0-40	20	36	21	17	150	35	36	M16X125	40
04203-316150160	C	55	41	17	12	0-70	20	36	21	17	150	35	36	M16X160	40
04203-320187160	C	62	30	21	14	0-40	30	42	27	20	187	44	44	M20X160	60
04203-320187200	C	62	30	21	14	0-80	30	42	27	20	187	44	44	M20X200	60
04203-320235200	C	70	30	25	17	0-70	31	51	34	24	235	60	47	M20X200	75
04203-320235250	C	70	30	25	17	0-100	31	51	34	24	235	60	47	M20X250	75
04203-324235200	C	70	30	25	17	0-50	31	51	34	24	235	60	47	M24X200	75
04203-324235250	C	70	30	25	17	0-100	31	51	34	24	235	60	47	M24X250	75

Adjustable heel supports

for clamp strap assembly

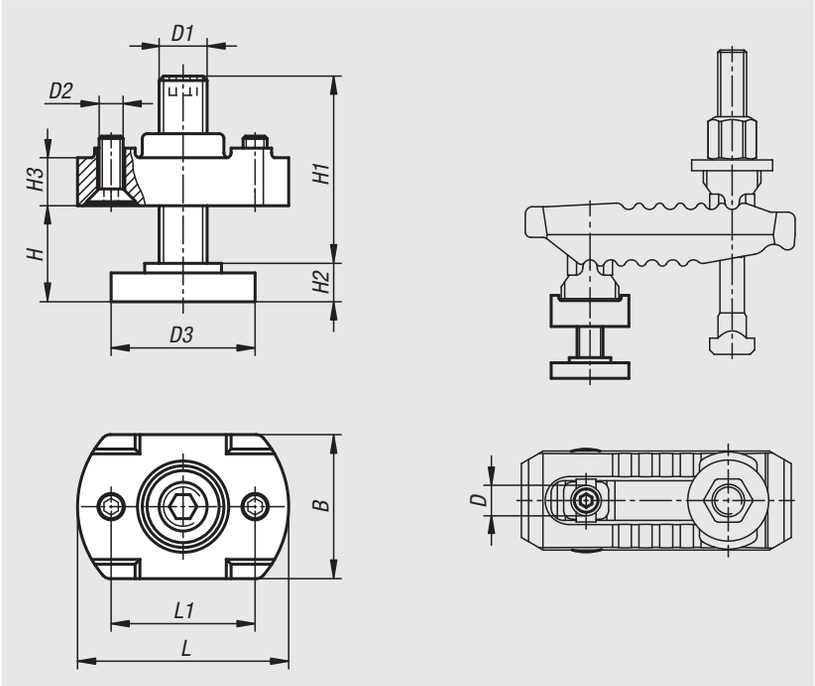

Material:
Carbon steel.

Version:
Body tempered and galvanized.
Support bolt tempered, grade 8.8.

Note:
These adjustable heel supports consist of support plate, support bolt and fastening screws for the strap heel support.
Adjustable heel supports are used to increase the clamping height of the clamp strap assemblies.

Order No.	B	D	D1	D2	D3	H clamping range	H1	H2	H3	L	L1
04204-1039	30	13	M10	M5	30	8-30	39	8	10	44	30
04204-1249	42	17	M12	M5	36	10-37	49	10	16	54	35
04204-1294	42	17	M12	M5	36	10-80	94	10	16	54	35
04204-1655	50	21	M16	M5	42	13-41	55	13	20	60	40
04204-1690	50	21	M16	M5	42	13-73	90	13	20	60	40
04204-2069	50	25	M20	M6	50	16-52	69	16	25	70	50
04204-20109	50	25	M20	M6	50	16-91	109	16	25	70	50

Clamp straps pivot

steel

Material:
Carbon steel.

Version:
Blue galvanised.

Sample order:
nlm 04205-20

Note:
The strap provides instant height adjustment without blocks or shims and requires little space on the machine table. Designed for rugged use and highly suitable for clamping blanking and punching dies. Suitable mounting bolts for these clamps see 07040.

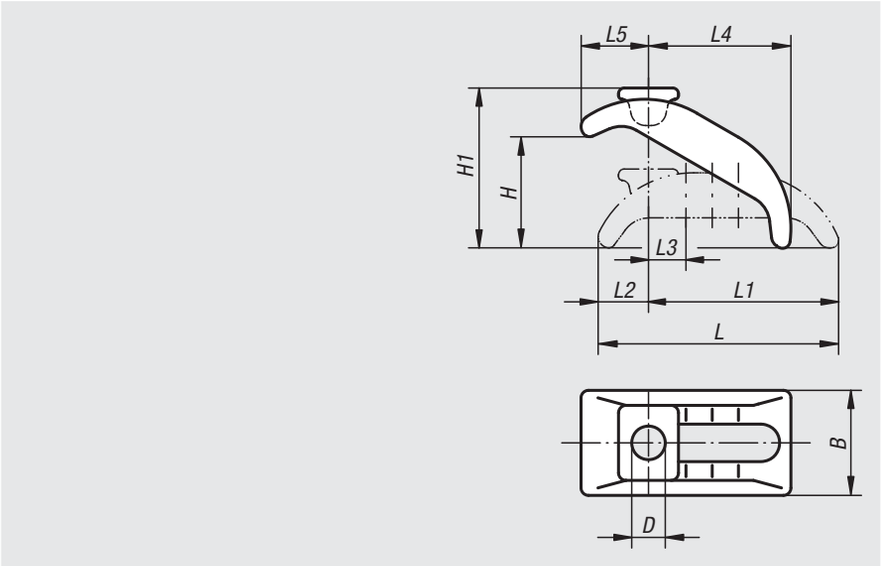

Order No.	suitable for slot width	suitable fastening screw	D	L	L1	L2	L3	L4	L5	B	H	H1
04205-12	12, 14	M12	13	88	68	23	14	48	28	38	0-40	57
04205-16	16, 18	M16	18	130	101	29	18	74	38	56	0-65	90
04205-20	20, 22	M20	22	144	112	32	20	80	46	66	0-70	103
04205-24	24, 28	M24	26	174	135	39	24	100	52	76	0-85	120

Clamp straps hinge heel

with bolt slot

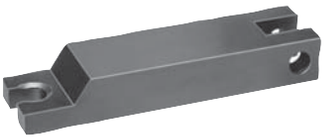

Material:
Carbon steel 1.1191

Version:
Black oxidised.

Sample order:
nlm 04210-10

Note:
Suitable hinge pins see 04520.
Use hexagon nut 07260 to clamp.

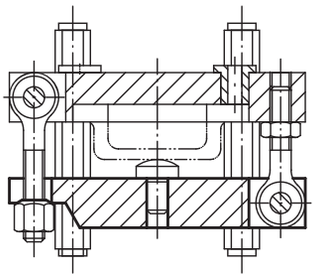

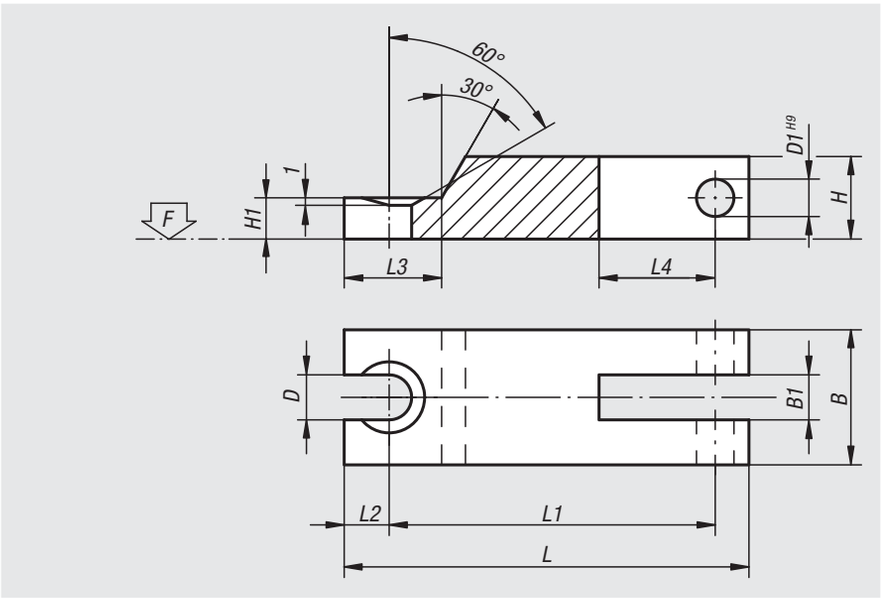

Order No.	L	L1	L2	L3	L4	B	B1	H	H1	D	D1	F kN
04210-08	100	85	7	17	11	25	9,5	16	8	9	8	17,54
04210-10	125	105	10	24	12	32	12,5	20	10	11	10	27,8
04210-12	160	138	10	25	15	40	14,5	25	12,5	14	12	40,4

Cam levers

internal and external thread, steel or stainless steel

Material:
Handles cast aluminum EN AC-46200.
Thrust washer plastic PA 66 GF 35-X fibreglass reinforced.
Hinge pin stainless steel 1.4305.
Studs and washer steel grade 5.8 or stainless steel 1.4305.

Version:
Handles fine structured powder-coated, black or red RAL 3003.
Thrust washer black.
Hinge pin bright.
Studs and washer blue passivated steel or bright stainless steel.

Sample order:
nlm 04232-1501105X20 (include length L)

Note:
Plastics are subject to creeping under load (retardation).

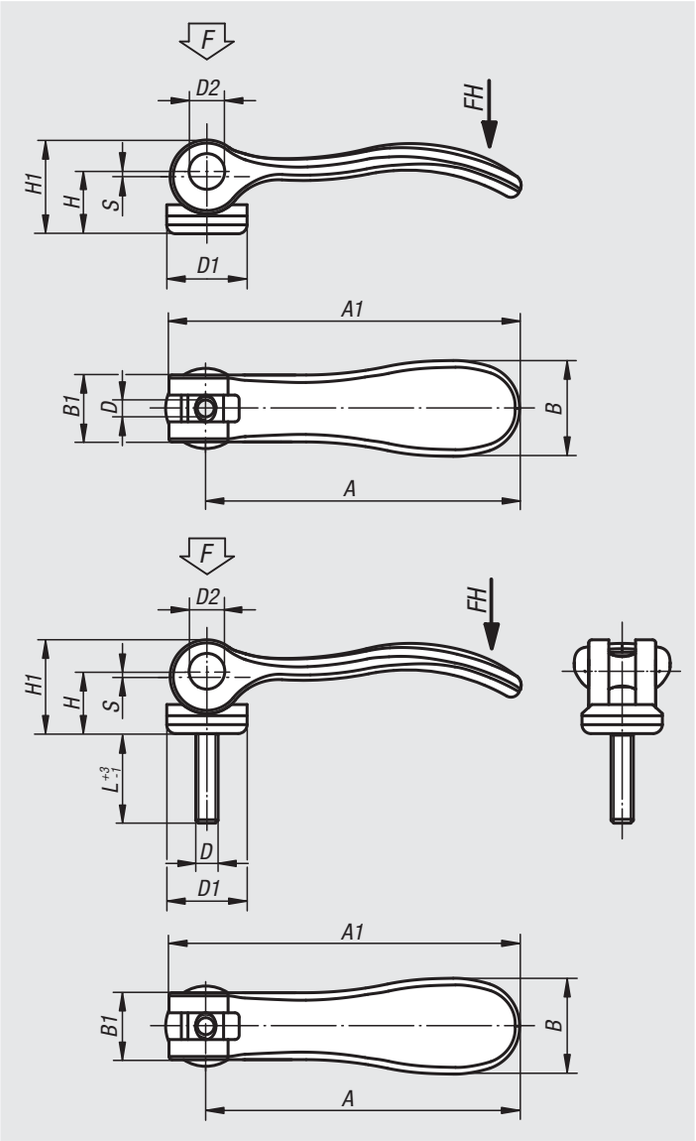

Cam levers

internal and external thread, steel or stainless steel

Cam levers with internal thread, grip black

Order No. steel	Order No. stainless steel	D	D1	D2	B	B1	H	H1	A	A1	Stroke S	Clamping force F (kN)	Hand force FH N
04232-9501103	04232-9511103	M3	12	6	14,4	11,5	9	13	36,2	41,7	1	1,5	90
04232-9501104	04232-9511104	M4	12	6	14,4	11,5	9	13	36,2	41,7	1	1,5	90
04232-0501104	04232-0511104	M4	15,4	8	18	13	11,2	17	52,3	59,1	1	2,5	100
04232-0501105	04232-0511105	M5	15,4	8	18	13	11,2	17	52,3	59,1	1	2,5	100
04232-1501105	04232-1511105	M5	18,1	9	21,5	15	14,5	22	70,4	79,2	1,2	4	120
04232-1501106	04232-1511106	M6	18,1	9	21,5	15	14,5	22	70,4	79,2	1,2	4	120
04232-2501108	04232-2511108	M8	27,1	11	33,3	24	18	28,5	96	108	1,5	8	350

Cam levers with internal thread, grip red

Order No. steel	Order No. stainless steel	D	D1	D2	B	B1	H	H1	A	A1	Stroke S	Clamping force F (kN)	Hand force FH N
04232-9501403	04232-9511403	M3	12	6	14,4	11,5	9	13	36,2	41,7	1	1,5	90
04232-9501404	04232-9511404	M4	12	6	14,4	11,5	9	13	36,2	41,7	1	1,5	90
04232-0501404	04232-0511404	M4	15,4	8	18	13	11,2	17	52,3	59,1	1	2,5	100
04232-0501405	04232-0511405	M5	15,4	8	18	13	11,2	17	52,3	59,1	1	2,5	100
04232-1501405	04232-1511405	M5	18,1	9	21,5	15	14,5	22	70,4	79,2	1,2	4	120
04232-1501406	04232-1511406	M6	18,1	9	21,5	15	14,5	22	70,4	79,2	1,2	4	120
04232-2501408	04232-2511408	M8	27,1	11	33,3	24	18	28,5	96	108	1,5	8	350

Cam levers with external thread, grip black

Order No. steel	Order No. stainless steel	D	D1	D2	B	B1	H	H1	A	A1	L	Stroke S	Clamping force F (kN)	Hand force FH N
04232-9501103X	04232-9511103X	M3	12	6	14,4	11,5	9	13	36,2	41,7	10/15/30	1	1,5	90
04232-9501104X	04232-9511104X	M4	12	6	14,4	11,5	9	13	36,2	41,7	10/15/30	1	1,5	90
04232-0501104X	04232-0511104X	M4	15,4	8	18	13	11,2	17	52,3	59,1	15/20/30	1	2,5	100
04232-0501105X	04232-0511105X	M5	15,4	8	18	13	11,2	17	52,3	59,1	20/30/40/50	1	2,5	100
04232-1501105X	04232-1511105X	M5	18,1	9	21,5	15	14,5	22	70,4	79,2	20/30/40/50	1,2	4	120
04232-1501106X	04232-1511106X	M6	18,1	9	21,5	15	14,5	22	70,4	79,2	20/30/40/50	1,2	4	120
04232-2501108X	04232-2511108X	M8	27,1	11	33,3	24	18	28,5	96	108	25/30/40/50	1,5	8	350
04232-2501110X	04232-2511110X	M10	27,1	11	33,3	24	18	28,5	96	108	25/30/40/50	1,5	8	350

Cam levers with external thread, grip red

Order No. steel	Order No. stainless steel	D	D1	D2	B	B1	H	H1	A	A1	L	Stroke S	Clamping force F (kN)	Hand force FH N
04232-9501403X	04232-9511403X	M3	12	6	14,4	11,5	9	13	36,2	41,7	10/15/30	1	1,5	90
04232-9501404X	04232-9511404X	M4	12	6	14,4	11,5	9	13	36,2	41,7	10/15/30	1	1,5	90
04232-0501404X	04232-0511404X	M4	15,4	8	18	13	11,2	17	52,3	59,1	15/20/30	1	2,5	100
04232-0501405X	04232-0511405X	M5	15,4	8	18	13	11,2	17	52,3	59,1	20/30/40/50	1	2,5	100
04232-1501405X	04232-1511405X	M5	18,1	9	21,5	15	14,5	22	70,4	79,2	20/30/40/50	1,2	4	120
04232-1501406X	04232-1511406X	M6	18,1	9	21,5	15	14,5	22	70,4	79,2	20/30/40/50	1,2	4	120
04232-2501408X	04232-2511408X	M8	27,1	11	33,3	24	18	28,5	96	108	25/30/40/50	1,5	8	350
04232-2501410X	04232-2511410X	M10	27,1	11	33,3	24	18	28,5	96	108	25/30/40/50	1,5	8	350

Cam levers steel

with internal and external thread

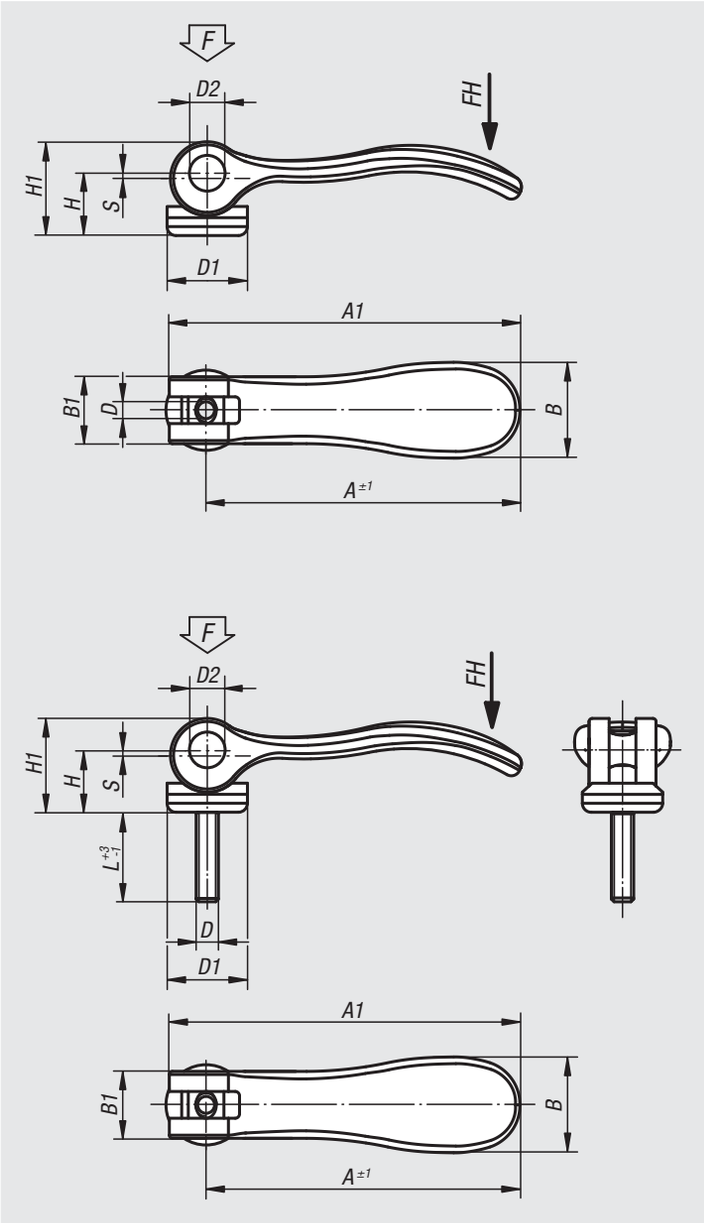

Material:
Handle steel 1.0401.
Thrust washer plastic PA 66 GF 35-X fibreglass reinforced.
Hinge pin stainless steel 1.4305.
Stud and washer steel, grade 5.8.

Version:
Handle, stud and washer blue passivated.
Thrust washer black.
Hinge pin bright.

Sample order:
nlm 04232-1502205

Note:
Plastics are subject to creeping under load (retardation).

Cam levers with internal thread, steel

Order No.	Size	D	D1	D2	B	B1	H	H1	A	A1	Stroke S	Clamping force F (kN)	Hand force FH N
04232-1502205	1	M5	18,1	9	21,5	15	14,5	22	70,4	79,2	1,2	4	120
04232-1502206	1	M6	18,1	9	21,5	15	14,5	22	70,4	79,2	1,2	4	120
04232-2502208	2	M8	27,1	11	33,2	24	18	28,5	96	108	1,5	8	350

Cam levers with external thread, steel

Order No.	Size	D	D1	D2	B	B1	H	H1	A	A1	L	Stroke S	Clamping force F (kN)	Hand force FH N
04232-1502205X	1	M5	18,1	9	21,5	15	14,5	22	70,4	79,2	20/30/40/50	1,2	4	120
04232-1502206X	1	M6	18,1	9	21,5	15	14,5	22	70,4	79,2	20/30/40/50	1,2	4	120
04232-2502208X	2	M8	27,1	11	33,2	24	18	28,5	96	108	25/30/40/50	1,5	8	350
04232-2502210X	2	M10	27,1	11	33,2	24	18	28,5	96	108	25/30/40/50	1,5	8	350

Notes

Cam levers

internal and external thread, stainless steel

Material:
Handles 1.4308.
Thrust washer plastic PA 66 GF 35-X fibreglass reinforced.
Hinge pin, washer and screw 1.4305.

Version:
Handle electropolished or blasted.
Thrust washer black.
Hinge pin, washer and screw bright.

Sample order:
nlm 04232.1512005X20 (include length L)

Note:
Plastics are subject to creeping under load (retardation).

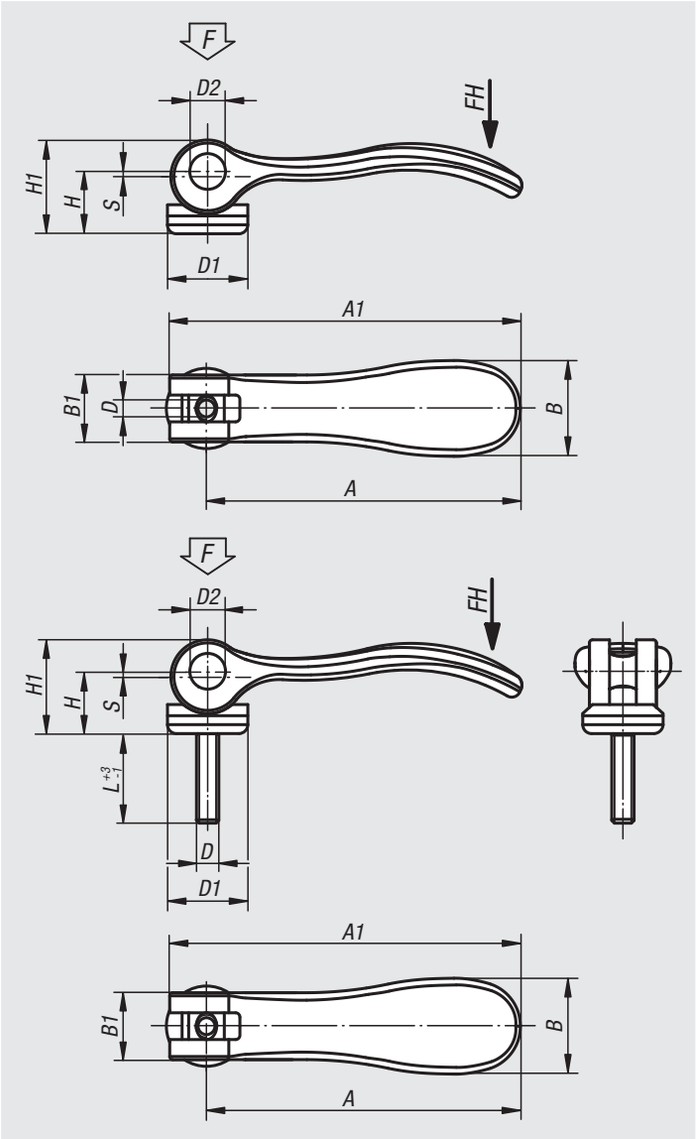

Cam levers

internal and external thread, stainless steel

Cam levers with internal thread, stainless steel

Order No.	Surface	D	D1	D2	B	B1	H	H1	A	A1	Stroke S	Clamping force F (kN)	Hand force FH N
04232-9512003	electropolished	M3	12	6	14,4	11,5	9	13	36,2	41,7	1	1,5	90
04232-9512004	electropolished	M4	12	6	14,4	11,5	9	13	36,2	41,7	1	1,5	90
04232-0512004	electropolished	M4	15,4	8	18	13	11,2	17	52,3	59,1	1	2,5	100
04232-0512005	electropolished	M5	15,4	8	18	13	11,2	17	52,3	59,1	1	2,5	100
04232-1512005	electropolished	M5	18,1	9	21,5	15	14,5	22	70,4	79,2	1,2	4	120
04232-1512006	electropolished	M6	18,1	9	21,5	15	14,5	22	70,4	79,2	1,2	4	120
04232-2512008	electropolished	M8	27,1	11	33,3	24	18	28,5	96	108	1,5	8	350
04232-9512303	blasted	M3	12	6	14,4	11,5	9	13	36,2	41,7	1	1,5	90
04232-9512304	blasted	M4	12	6	14,4	11,5	9	13	36,2	41,7	1	1,5	90
04232-0512304	blasted	M4	15,4	8	18	13	11,2	17	52,3	59,1	1	2,5	100
04232-0512305	blasted	M5	15,4	8	18	13	11,2	17	52,3	59,1	1	2,5	100
04232-1512305	blasted	M5	18,1	9	21,4	15	14,5	22	70,4	79,2	1,2	4	120
04232-1512306	blasted	M6	18,1	9	21,4	15	14,5	22	70,4	79,2	1,2	4	120
04232-2512308	blasted	M8	27,1	11	33,3	24	18	28,5	96	108	1,5	8	350

Cam levers with external thread, stainless steel

Order No.	Surface	D	D1	D2	B	B1	H	H1	A	A1	L	Stroke S	Clamping force F (kN)	Hand force FH N
04232-9512003X	electropolished	M3	12	6	14,4	11,5	9	13	36,2	41,7	10/15/30	1	1,5	90
04232-9512004X	electropolished	M4	12	6	14,4	11,5	9	13	36,2	41,7	10/15/30	1	1,5	90
04232-0512004X	electropolished	M4	15,4	8	18	13	11,2	17	52,3	59,1	15/20/30	1	2,5	100
04232-0512005X	electropolished	M5	15,4	8	18	13	11,2	17	52,3	59,1	20/30/40/50	1	2,5	100
04232-1512005X	electropolished	M5	18,1	9	21,5	15	14,5	22	70,4	79,5	20/30/40/50	1,2	4	120
04232-1512006X	electropolished	M6	18,1	9	21,5	15	14,5	22	70,4	79,5	20/30/40/50	1,2	4	120
04232-2512008X	electropolished	M8	27,1	11	33,3	24	18	28,5	96	108	25/30/40/50	1,5	8	350
04232-2512010X	electropolished	M10	27,1	11	33,3	24	18	28,5	96	108	25/30/40/50	1,5	8	350
04232-9512303X	blasted	M3	12	6	14,4	11,5	9	13	36,2	41,7	10/15/30	1	1,5	90
04232-9512304X	blasted	M4	12	6	14,4	11,5	9	13	36,2	41,7	10/15/30	1	1,5	90
04232-0512304X	blasted	M4	15,4	8	18	13	11,2	17	52,3	59,1	15/20/30	1	2,5	100
04232-0512305X	blasted	M5	15,4	8	18	13	11,2	17	52,3	59,1	20/30/40/50	1	2,5	100
04232-1512305X	blasted	M5	18,1	9	21,4	15	14,5	22	70,4	79,2	20/30/40/50	1,2	4	120
04232-1512306X	blasted	M6	18,1	9	21,4	15	14,5	22	70,4	79,2	20/30/40/50	1,2	4	120
04232-2512308X	blasted	M8	27,1	11	33,3	24	18	28,5	96	108	25/30/40/50	1,5	8	350
04232-2512310X	blasted	M10	27,1	11	33,3	24	18	28,5	96	108	25/30/40/50	1,5	8	350

Cam levers

internal or external thread, stainless steel, thrust washer stainless steel

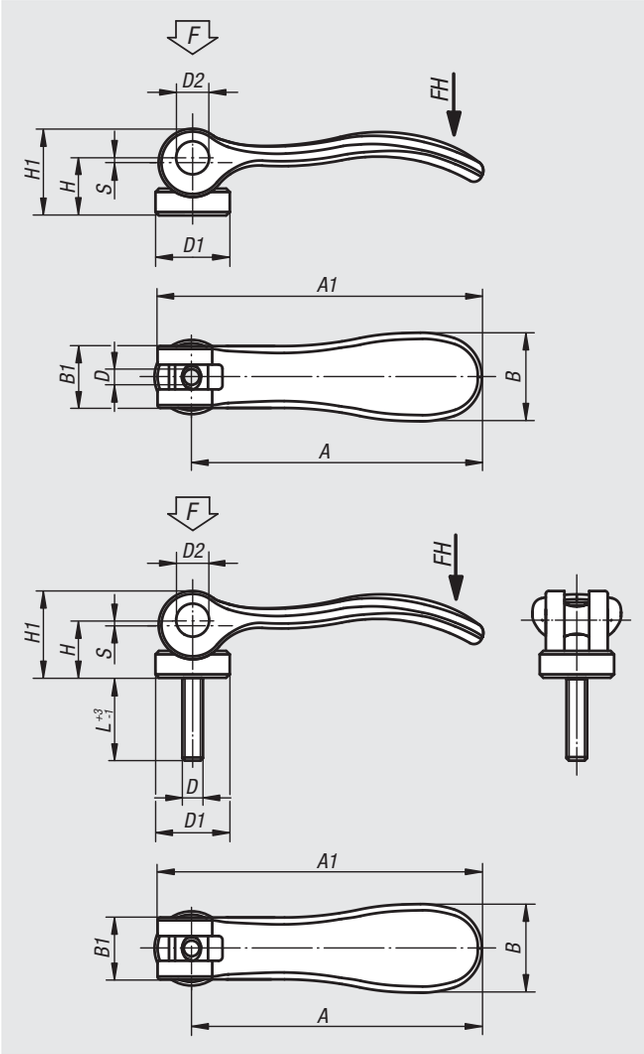

Material:
Handle 1.4308.
Thrust washer 1.4034 stainless steel, hardened.
Hinge pin and stud 1.4305 stainless steel.

Version:
Handle electropolished or blasted.
Thrust washer, hinge pin and screw bright.

Sample order:
nlm 04232-0541005X20 (include length L)

Note:
The thrust washer face is lightly greased before delivery. The grease is FDA conform and is suitable for use in the foodstuff and pharmaceutical industries.

Cam levers, stainless steel, with internal thread, thrust washer stainless steel

Order No. electropolished	Order No. blasted	D	D1	D2	B	B1	H	H1	A	A1	Stroke S	Clamping force F (kN)	Hand force FH N
04232-9541003	04232-9541303	M3	12	6	14,4	11,5	9	13,5	36,2	41,7	1	1,5	90
04232-9541004	04232-9541304	M4	12	6	14,4	11,5	9	13,5	36,2	41,7	1	1,5	90
04232-0541004	04232-0541304	M4	15,4	8	18	13	11,4	17,2	52,3	59,1	1	2,5	100
04232-0541005	04232-0541305	M5	15,4	8	18	13	11,4	17,2	52,3	59,1	1	2,5	100
04232-1541005	04232-1541305	M5	18	9	21,5	15	14,7	22	70,4	79,2	1,2	4	120
04232-1541006	04232-1541306	M6	18	9	21,5	15	14,7	22	70,4	79,2	1,2	4	120
04232-2541008	04232-2541308	M8	27	11	33,3	24	18,3	28,8	96	108	1,5	8	350

Cam levers, stainless steel, with external thread, thrust washer stainless steel

Order No. electropolished	Order No. blasted	D	D1	D2	B	B1	H	H1	A	A1	L	Stroke S	Clamping force F (kN)	Hand force FH N
04232-9541003X	04232-9541303X	M3	12	6	14,4	11,5	9	13,5	36,2	41,7	10/15/30	1	1,5	90
04232-9541004X	04232-9541304X	M4	12	6	14,4	11,5	9	13,5	36,2	41,7	10/15/30	1	1,5	90
04232-0541004X	04232-0541304X	M4	15,4	8	18	13	11,4	17,2	52,3	59,1	15/20/30	1	2,5	100
04232-0541005X	04232-0541305X	M5	15,4	8	18	13	11,4	17,2	52,3	59,1	20/30/40/50	1	2,5	100
04232-1541005X	04232-1541305X	M5	18	9	21,5	15	14,7	22	70,4	79,5	20/30/40/50	1,2	4	120
04232-1541006X	04232-1541306X	M6	18	9	21,5	15	14,7	22	70,4	79,5	20/30/40/50	1,2	4	120
04232-2541008X	04232-2541308X	M8	27	11	33,3	24	18,3	28,8	96	108	25/30/40/50	1,5	8	350
04232-2541010X	04232-2541310X	M10	27	11	33,3	24	18,3	28,8	96	108	25/30/40/50	1,5	8	350

Notes

Cam levers with plastic handle

internal and external thread, steel or stainless steel

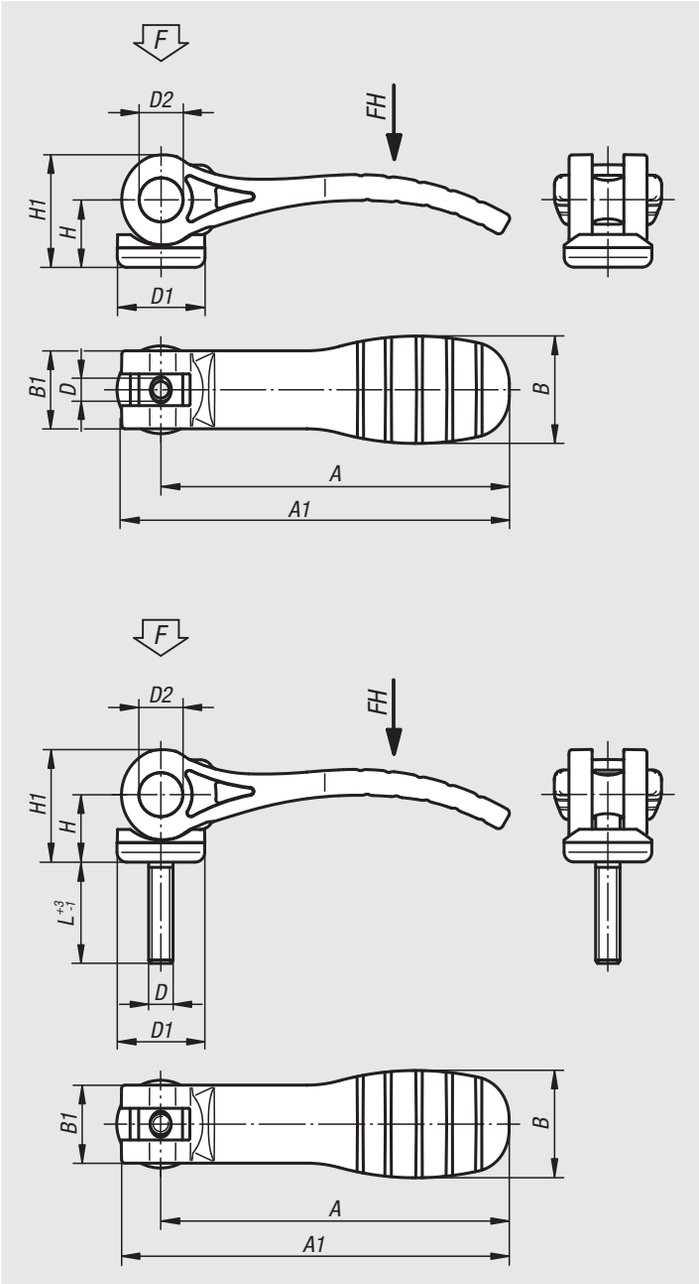

Material:
Grip and thrust washer plastic PA 66 fibreglass reinforced.
Hinge pins stainless steel 1.4305.
Studs and washer steel grade 5.8 or stainless steel 1.4305.

Version:
Grip black or traffic red RAL3020.
Thrust washer black.
Hinge pin blank.
Stud and washer blue passivated or bright stainless steel.

Sample order:
nlm 04232-1521105X20 (include length L)

Note:
Plastics are subject to creeping under load (retardation), this can cause reduced clamping force.

Cam levers with black plastic grip and internal thread

Order No. steel	Order No. stainless steel	D	D1	D2	B	B1	H	H1	A	A1	Travel	Clamping force F (kN)	Hand force FH N
04232-1521105	**04232-1531105**	M5	18,1	9	22	16	14	23,4	71,5	79,6	1,15	2,5	125
04232-1521106	**04232-1531106**	M6	18,1	9	22	16	14	23,4	71,5	79,6	1,15	2,5	125
04232-2521108	**04232-2531108**	M8	27,1	11	33	24,2	16,2	27,7	100	110	1,5	5	170

Cam levers with red plastic grip and internal thread

Order No. steel	Order No. stainless steel	D	D1	D2	B	B1	H	H1	A	A1	Travel	Clamping force F (kN)	Hand force FH N
04232-152118405	**04232-153118405**	M5	18,1	9	22	16	14	23,4	71,5	79,6	1,15	2,5	125
04232-152118406	**04232-153118406**	M6	18,1	9	22	16	14	23,4	71,5	79,6	1,15	2,5	125
04232-252118408	**04232-253118408**	M8	27,1	11	33	24,2	16,2	27,7	100	110	1,5	5	170

Cam levers with plastic handle

internal and external thread, steel or stainless steel

Cam levers with black plastic grip and external thread

Order No. steel	Order No. stainless steel	D	D1	D2	B	B1	H	H1	A	A1	L	Travel	Clamping force F (kN)	Hand force FH N
04232-1521105X	**04232-1531105X**	M5	18,1	9	22	16	14	23,4	71,5	79,6	20/30/40/50	1,15	2,5	125
04232-1521106X	**04232-1531106X**	M6	18,1	9	22	16	14	23,4	71,5	79,6	20/30/40/50	1,15	2,5	125
04232-2521108X	**04232-2531108X**	M8	27,1	11	33	24,2	16,2	27,7	100	110	25/30/40/50	1,5	5	170
04232-2521110X	**04232-2531110X**	M10	27,1	11	33	24,2	16,2	27,7	100	110	25/30/40/50	1,5	5	170

Cam levers with red plastic grip and external thread

Order No. steel	Order No. stainless steel	D	D1	D2	B	B1	H	H1	A	A1	L	Travel	Clamping force F (kN)	Hand force FH N
04232-152118405X	**04232-153118405X**	M5	18,1	9	22	16	14	23,4	71,5	79,6	20/30/40/50	1,15	2,5	125
04232-152118406X	**04232-153118406X**	M6	18,1	9	22	16	14	23,4	71,5	79,6	20/30/40/50	1,15	2,5	125
04232-252118408X	**04232-253118408X**	M8	27,1	11	33	24,2	16,2	27,7	100	110	25/30/40/50	1,5	5	170
04232-252118410X	**04232-253118410X**	M10	27,1	11	33	24,2	16,2	27,7	100	110	25/30/40/50	1,5	5	170

Cam levers adjustable

external thread, steel or stainless steel

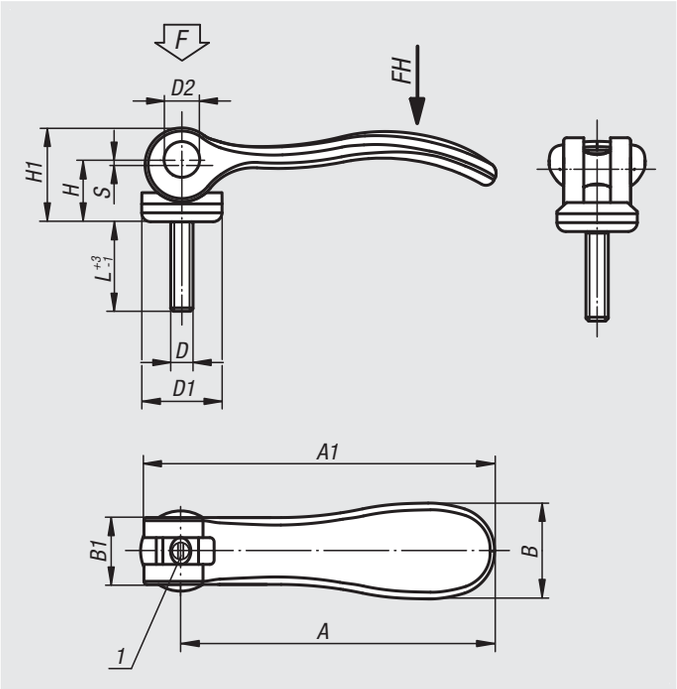

Material:
Handles cast aluminium EN AC-46200.
Thrust washer plastic PA 66 GF 35-X fibreglass reinforced.
Hinge pins stainless steel 1.4305.
Studs and washer steel grade 5.8 or stainless steel 1.4305.

Version:
Handles fine structured powder-coated, black or red RAL 3003.
Thrust washer black.
Hinge pin bright.
Studs and washer blue passivated steel or bright stainless steel.

Sample order:
nlm 04233-1501105X20 (include length L)

Note:
Adjustable cam levers are used if the position of the lever relative to the axis of tension only permits one specific position (interference circle). The exact position of the lever is adjusted using a screwdriver on the fine thread setscrew.
Plastics are subject to creeping under load (retardation).

Drawing reference:
1) setscrew for fine adjustment of lever

Adjustable cam levers with external thread, grip black

Order No. steel	Order No. stainless steel	D	D1	D2	B	B1	H	H1	A	A1	L	Stroke S	Clamping force F (kN)	Hand force FH N
04233-9501103X	**04233-9511103X**	M3	12	6	14,4	11,5	9	13	36,2	41,7	10/15/30	1	1,5	90
04233-9501104X	**04233-9511104X**	M4	12	6	14,4	11,5	9	13	36,2	41,7	10/15/30	1	1,5	90
04233-0501104X	**04233-0511104X**	M4	15,4	8	18	13	11,2	17	52,3	59,1	15/20/30	1	2,5	100
04233-0501105X	**04233-0511105X**	M5	15,4	8	18	13	11,2	17	52,3	59,1	20/30/40/50	1	2,5	100
04233-1501105X	**04233-1511105X**	M5	18,1	9	21,5	15	14,5	22	70,4	79,2	20/30/40/50	1,2	4	120
04233-1501106X	**04233-1511106X**	M6	18,1	9	21,5	15	14,5	22	70,4	79,2	20/30/40/50	1,2	4	120
04233-2501108X	**04233-2511108X**	M8	27,1	11	33,3	24	18	28,5	96	108	25/30/40/50	1,5	8	350
04233-2501110X	**04233-2511110X**	M10	27,1	11	33,3	24	18	28,5	96	108	25/30/40/50	1,5	8	350

Adjustable cam levers with external thread, grip red

Order No. steel	Order No. stainless steel	D	D1	D2	B	B1	H	H1	A	A1	L	Stroke S	Clamping force F (kN)	Hand force FH N
04233-9501403X	**04233-9511403X**	M3	12	6	14,4	11,5	9	13	36,2	41,7	10/15/30	1	1,5	90
04233-9501404X	**04233-9511404X**	M4	12	6	14,4	11,5	9	13	36,2	41,7	10/15/30	1	1,5	90
04233-0501404X	**04233-0511404X**	M4	15,4	8	18	13	11,2	17	52,3	59,1	15/20/30	1	2,5	100
04233-0501405X	**04233-0511405X**	M5	15,4	8	18	13	11,2	17	52,3	59,1	20/30/40/50	1	2,5	100
04233-1501405X	**04233-1511405X**	M5	18,1	9	21,5	15	14,5	22	70,4	79,2	20/30/40/50	1,2	4	120
04233-1501406X	**04233-1511406X**	M6	18,1	9	21,5	15	14,5	22	70,4	79,2	20/30/40/50	1,2	4	120
04233-2501408X	**04233-2511408X**	M8	27,1	11	33,3	24	18	28,5	96	108	25/30/40/50	1,5	8	350
04233-2501410X	**04233-2511410X**	M10	27,1	11	33,3	24	18	28,5	96	108	25/30/40/50	1,5	8	350

Cam levers adjustable

steel, with external thread

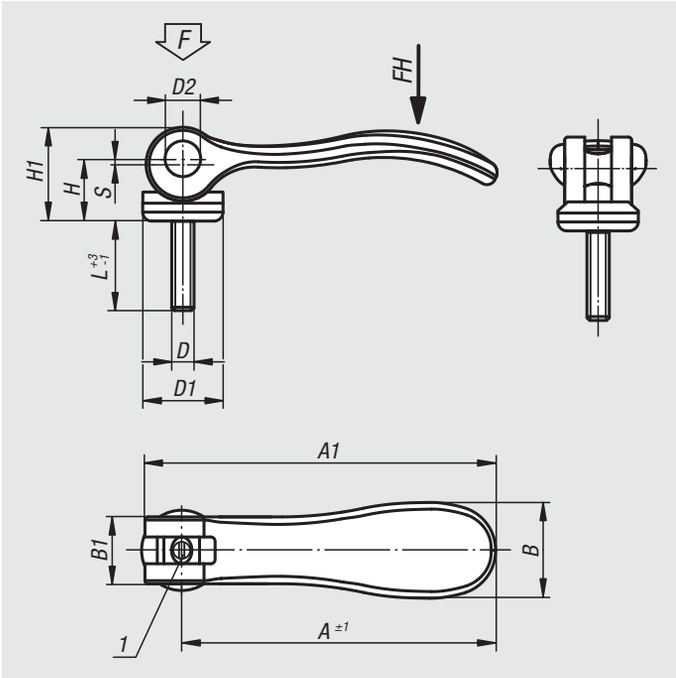

Material:
Handle steel 1.0401.
Thrust washer plastic PA 66 GF 35-X fibreglass reinforced.
Hinge pin stainless steel 1.4305.
Stud and washer steel, grade 5.8.

Version:
Handle, stud and washer blue passivated.
Thrust washer black.
Hinge pin bright.

Sample order:
nlm 04233-1502205X20

Note:
Adjustable cam levers are used if the position of the lever relative to the axis of tension only permits one specific position (interference circle). The exact position of the lever is adjusted using a screwdriver on the fine thread setscrew.
Plastics are subject to creeping under load (retardation).

Drawing reference:
1) setscrew for fine adjustment of lever

Order No.	Size	D	D1	D2	B	B1	H	H1	A	A1	L	Stroke S	Clamping force F (kN)	Hand force FH N
04233-1502205X	1	M5	18,1	9	21,5	15	14,5	22	70,4	79,2	20/30/40/50	1,2	4	120
04233-1502206X	1	M6	18,1	9	21,5	15	14,5	22	70,4	79,2	20/30/40/50	1,2	4	120
04233-2502208X	2	M8	27,1	11	33,2	24	18	28,5	96	108	25/30/40/50	1,5	8	350
04233-2502210X	2	M10	27,1	11	33,2	24	18	28,5	96	108	25/30/40/50	1,5	8	350

Cam levers adjustable

external thread, stainless steel

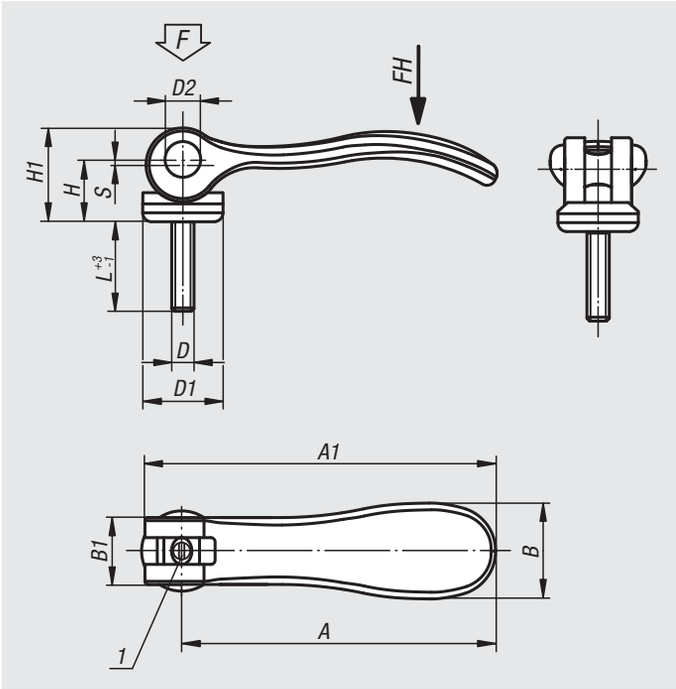

Material:
Handles 1.4308.
Thrust washer plastic PA 66 GF 35-X fibreglass reinforced.
Hinge pin, washer and screw 1.4305.

Version:
Handle electropolished or blasted.
Thrust washer black.
Hinge pin, washer and screw bright.

Sample order:
nlm 04233-1512005X20 (include length L)

Note:
Adjustable cam levers are used if the position of the lever relative to the axis of tension only permits one specific position (interference circle). The exact position of the lever is adjusted using a screwdriver on the fine thread setscrew.
Plastics are subject to creeping under load (retardation).

Drawing reference:
1) setscrew for fine adjustment of lever

Order No.	Surface	D	D1	D2	B	B1	H	H1	A	A1	L	Stroke S	Clamping force F (kN)	Hand force FH N
04233-9512003X	electropolished	M3	12	6	14,4	11,5	9	13	36,2	41,7	10/15/30	1	1,5	90
04233-9512004X	electropolished	M4	12	6	14,4	11,5	9	13	36,2	41,7	10/15/30	1	1,5	90
04233-0512004X	electropolished	M4	15,4	8	18	13	11,2	17	52,3	59,1	15/20/30	1	2,5	100
04233-0512005X	electropolished	M5	15,4	8	18	13	11,2	17	52,3	59,1	20/30/40/50	1	2,5	100
04233-1512005X	electropolished	M5	18,1	9	21,5	15	14,5	22	70,4	79,2	20/30/40/50	1,2	4	120
04233-1512006X	electropolished	M6	18,1	9	21,5	15	14,5	22	70,4	79,2	20/30/40/50	1,2	4	120
04233-2512008X	electropolished	M8	27,1	11	33,3	24	18	28,5	96	108	25/30/40/50	1,5	8	350
04233-2512010X	electropolished	M10	27,1	11	33,3	24	18	28,5	96	108	25/30/40/50	1,5	8	350
04233-9512303X	blasted	M3	12	6	14,4	11,5	9	13	36,2	41,7	10/15/30	1	1,5	90
04233-9512304X	blasted	M4	12	6	14,4	11,5	9	13	36,2	41,7	10/15/30	1	1,5	90
04233-0512304X	blasted	M4	15,4	8	18	13	11,2	17	52,3	59,1	15/20/30	1	2,5	100
04233-0512305X	blasted	M5	15,4	8	18	13	11,2	17	52,3	59,1	20/30/40/50	1	2,5	100
04233-1512305X	blasted	M5	18,1	9	21,4	15	14,5	22	70,4	79,2	20/30/40/50	1,2	4	120
04233-1512306X	blasted	M6	18,1	9	21,4	15	14,5	22	70,4	79,2	20/30/40/50	1,2	4	120
04233-2512308X	blasted	M8	27,1	11	33,3	24	18	28,5	96	108	25/30/40/50	1,5	8	350
04233-2512310X	blasted	M10	27,1	11	33,3	24	18	28,5	96	108	25/30/40/50	1,5	8	350

Cam levers adjustable

external thread, stainless steel, thrust washer stainless steel

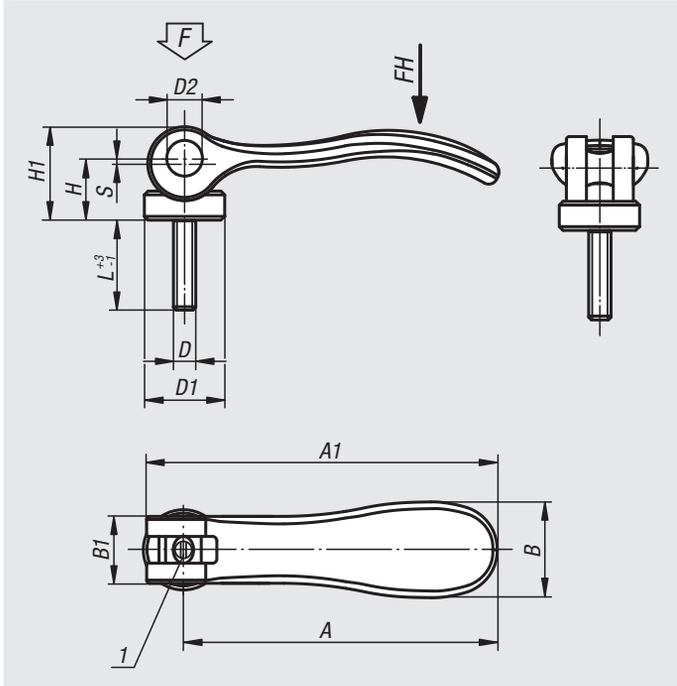

Material:
Handle 1.4308.
Thrust washer 1.4034 stainless steel, hardened.
Hinge pin and stud 1.4305 stainless steel.

Version:
Handle electropolished or blasted.
Thrust washer, hinge pin and screw bright.

Sample order:
nlm 04233-0541305X20 (include length L)

Note:
Adjustable cam levers are used when the position of the clamping lever relative to the clamping axis permits only one specific position (swing circle interference). The exact position of the clamping lever is adjusted with a screwdriver via the fine thread on the stud.

The thrust washer face is lightly greased before delivery.
The grease is FDA conform and is suitable for use in the foodstuff and pharmaceutical industries.

Drawing reference:
1) setscrew for fine adjustment of lever

Order No. electropolished	Order No. blasted	D	D1	D2	B	B1	H	H1	A	A1	L	Stroke S	Clamping force F (kN)	Hand force FH N
04233-9541003X	**04233-9541303X**	M3	12	6	14,4	11,5	9	13,5	36,2	41,7	10/15/30	1	1,5	90
04233-9541004X	**04233-9541304X**	M4	12	6	14,4	11,5	9	13,5	36,2	41,7	10/15/30	1	1,5	90
04233-0541004X	**04233-0541304X**	M4	15,4	8	18	13	11,4	17,2	52,3	59,1	15/20/30	1	2,5	100
04233-0541005X	**04233-0541305X**	M5	15,4	8	18	13	11,4	17,2	52,3	59,1	20/30/40/50	1	2,5	100
04233-1541005X	**04233-1541305X**	M5	18	9	21,5	15	14,7	22	70,4	79,2	20/30/40/50	1,2	4	120
04233-1541006X	**04233-1541306X**	M6	18	9	21,5	15	14,7	22	70,4	79,2	20/30/40/50	1,2	4	120
04233-2541008X	**04233-2541308X**	M8	27	11	33,3	24	18,3	28,8	96	108	25/30/40/50	1,5	8	350
04233-2541010X	**04233-2541310X**	M10	27	11	33,3	24	18,3	28,8	96	108	25/30/40/50	1,5	8	350

Cam levers adjustable with plastic handle

external thread, steel or stainless steel

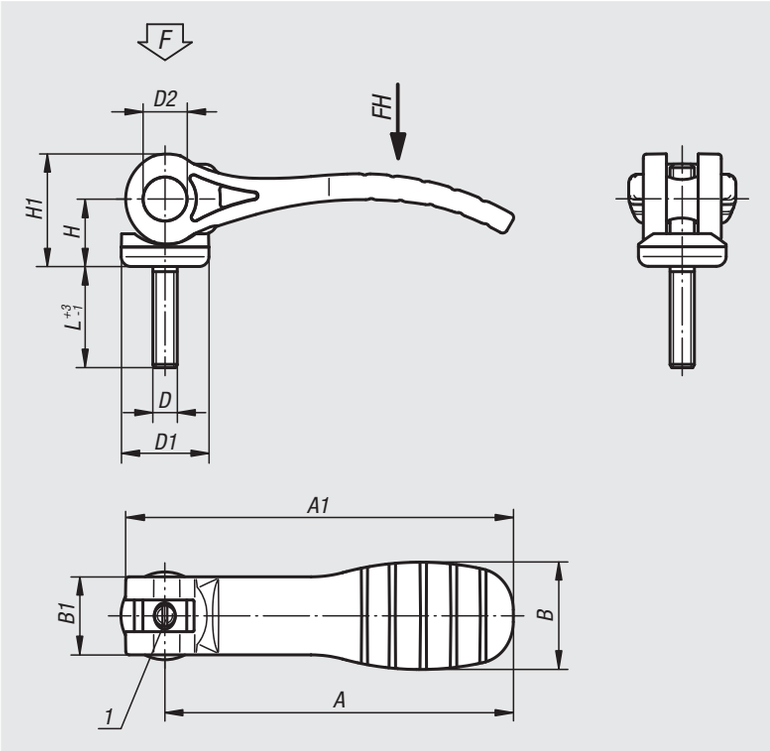

Material:
Handles and thrust washer plastic PA 66 fibreglass reinforced.
Hinge pins stainless steel 1.4305.
Studs and washer steel grade 5.8 or stainless steel 1.4305.

Version:
Grip black or traffic red RAL3020.
Thrust washer black.
Hinge pin blank.
Stud and washer blue passivated or bright stainless steel.

Sample order:
nlm 04233-1521105X20 (include length L)

Note:
Adjustable cam levers are used if the position of the lever relative to the axis of tension only permits one specific position (interference circle). The exact position of the lever is adjusted using a screwdriver on the fine thread setscrew.
Plastics are subject to creeping under load (retardation), this can cause reduced clamping force.

Drawing reference:
1) setscrew for fine adjustment of lever

Cam levers, adjustable with black plastic grip and external thread

Order No. steel	Order No. stainless steel	D	D1	D2	B	B1	H	H1	A	A1	L	Travel	Clamping force F (kN)	Hand force FH N
04233-1521105X	**04233-1531105X**	M5	18,1	9	22	16	14	23,4	71,5	79,6	20/30/40/50	1,15	2,5	125
04233-1521106X	**04233-1531106X**	M6	18,1	9	22	16	14	23,4	71,5	79,6	20/30/40/50	1,15	2,5	125
04233-2521108X	**04233-2531108X**	M8	27,1	11	33	24	16,2	27,7	100	110	25/30/40/50	1,5	5	170
04233-2521110X	**04233-2531110X**	M10	27,1	11	33	24	16,2	27,7	100	110	25/30/40/50	1,5	5	170

Cam levers, adjustable with red plastic grip and external thread

Order No. steel	Order No. stainless steel	D	D1	D2	B	B1	H	H1	A	A1	L	Travel	Clamping force F (kN)	Hand force FH N
04233-152118405X	**04233-153118405X**	M5	18,1	9	22	16	14	23,4	71,5	79,6	20/30/40/50	1,15	2,5	125
04233-152118406X	**04233-153118406X**	M6	18,1	9	22	16	14	23,4	71,5	79,6	20/30/40/50	1,15	2,5	125
04233-252118408X	**04233-253118408X**	M8	27,1	11	33	24	16,2	27,7	100	110	25/30/40/50	1,5	5	170
04233-252118410X	**04233-253118410X**	M10	27,1	11	33	24	16,2	27,7	100	110	25/30/40/50	1,5	5	170

04250

Hinge pins

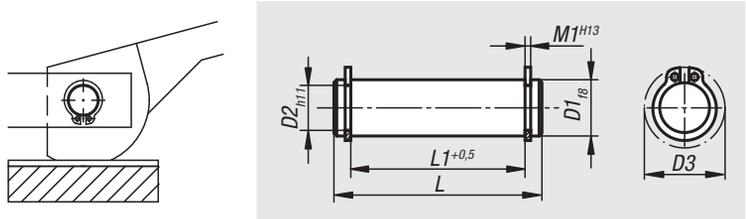

Material:
Carbon steel 1.0503.07

Version:
Tempered. Ground, bright.

Sample order:
nlm 04250-08

Note:
For use with:
Single cam levers 04290 and 04310.
Eye bolts 07180.
Clevis 07620.
Circlips supplied.

Order No.	D1	L	L1	M1	D2	D3
04250-05	5	18	13	0,7	4,8	10,7
04250-06	6	22	17	0,8	5,7	12,2
04250-08	8	30	25	0,9	7,6	15,2
04250-081	8	20	16	0,9	7,6	15,2
04250-082	8	27	21	0,9	7,6	15,2
04250-10	10	37	32	1,1	9,6	17,6
04250-101	10	25	20	1,1	9,6	17,6
04250-102	10	35	29	1,1	9,6	17,6
04250-12	12	46	40	1,1	11,5	19,6
04250-121	12	31	25	1,1	11,5	19,6
04250-122	12	37	31	1,1	11,5	19,6
04250-14	14	44	37	1,1	13,4	22
04250-16	16	48	41	1,1	15,2	24,4
04250-18	18	58	51	1,3	17	26,8

04270

Spacer bolts

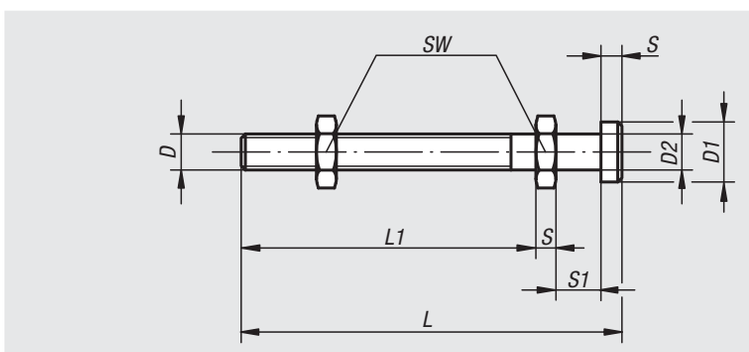

Material:
Carbon steel 1.1181.

Version:
Tempered and black oxidised.

Sample order:
nlm 04270-08

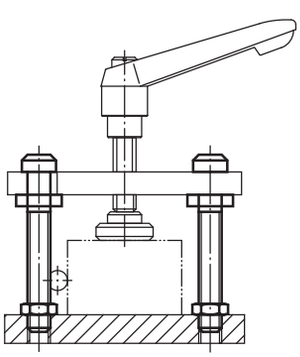

Order No.	D	D1	D2	L	L1	S	S1	SW
04270-08	M8	13	8	80	60	4	11	13
04270-10	M10	17	10	100	77	5	13	17
04270-12	M12	19	12	125	97	6	15	19
04270-14	M14	22	14	160	129	7	17	22

04290

Cam levers single

Material:
Carbon steel 1.7220.
Ball grip plastic.

Version:
Tempered and black oxidised.

Sample order:
nlm 04290-10

Note:
Suitable hinge pin see 04250.
The cam lever is an eccentric lever that moves along a logarithmic spiral. Its clamping properties are even over the entire contact surface of the cam.

Force diagram

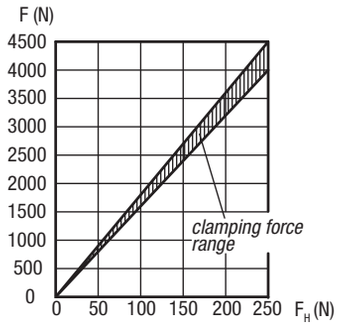

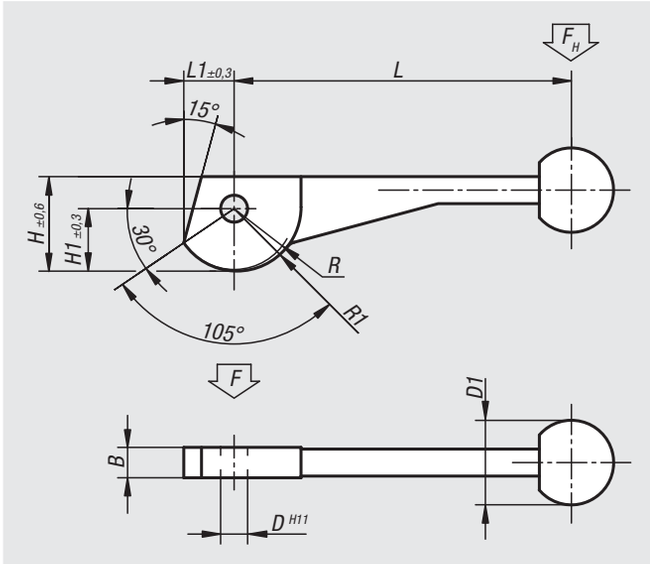

Order No.	L	L1	B	H	H1	D	D1	R	R1
04290-08	104±2	14,9	9	28,2	18,7	8	25	17,2	19,2
04290-10	123±2	18,6	12	34,8	23,3	10	30	21,5	24
04290-12	146±3	24,3	14	43,8	30,3	12	30	28	31,2

04310

Cam levers double

Material:
Carbon steel 1.7220.
Ball grip plastic.

Version:
Tempered and black oxidised.

Sample order:
nlm 04310-12

Note:
Suitable hinge pin see 04250.
The cam lever is an eccentric lever that moves along a logarithmic spiral. Its clamping properties are even over the entire contact surface of the cam.

Force diagram

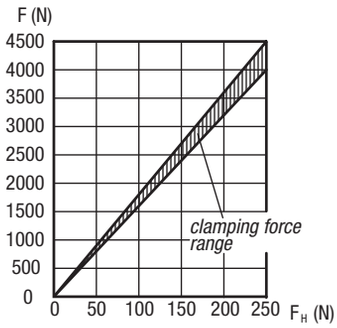

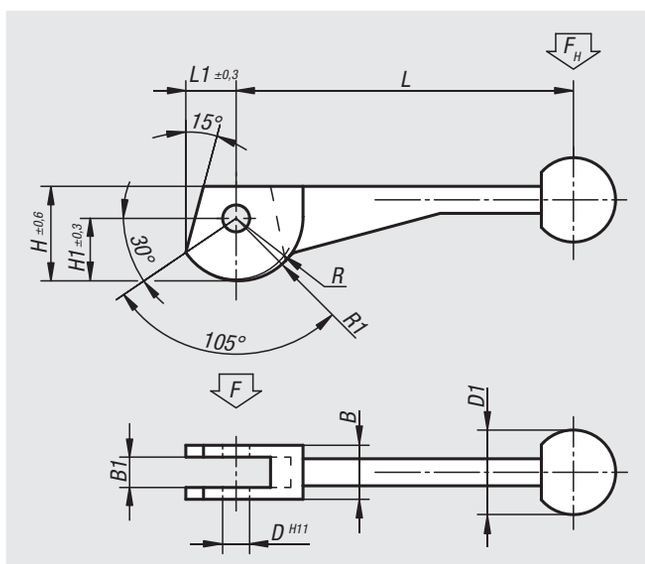

Order No.	L	L1	B	B1	H	H1	D	D1	R	R1
04310-08	104±2	14,9	16	9	28,2	18,7	8	25	17,2	19,2
04310-10	123±2	18,6	20	12	34,8	23,3	10	30	21,5	24
04310-12	146±3	24,3	25	14	43,8	30,3	12	30	28	31,2

04330

Cam clamps

with end lock

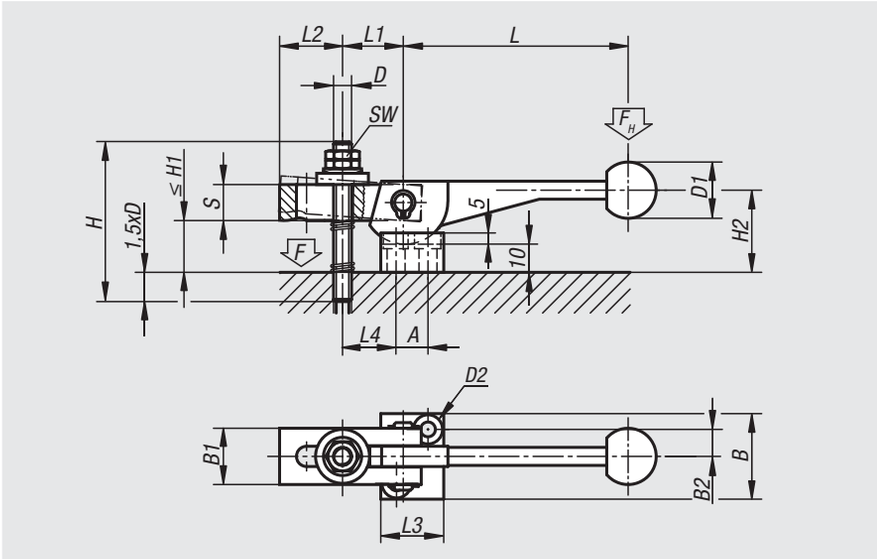

Material:
Cam lever carbon steel 1.7220.
Strap carbon steel 1.1191.

Version:
Black oxidised.

Sample order:
nlm 04330-10

Force diagram

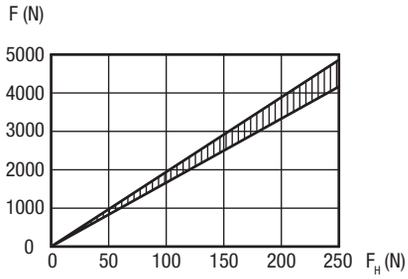

Order No.	L	L1	L2	L3	L4	B	B1	B2	S	H	H1 max.	H2	D	D1	D2	A	SW
04330-08	104±2	27	28	28	27	38	25	12	16	70	25	34	M8	25	7	14	13
04330-10	123±2	34	36	32	35	41	32	13,5	20	80	24	40	M10	30	7	16	17
04330-12	146±3	43	45	37	45	43	40	14,5	25	100	31	48	M12	30	7	19	19

04350

Cam clamps

with middle lock

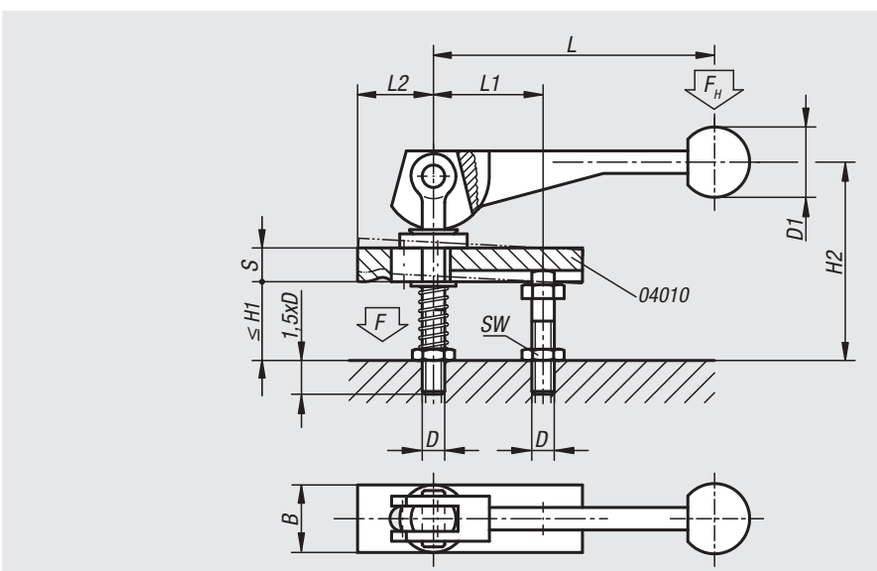

Material:
Cam lever carbon steel 1.7220.
Strap carbon steel 1.1191

Version:
Black oxidised.

Sample order:
nlm 04350-12

Force diagram

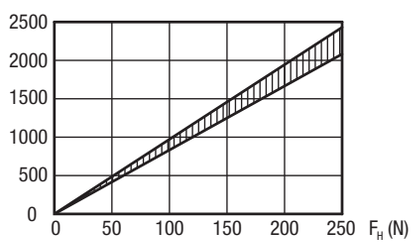

Order No.	L	L1	L2	B	S	H1 max.	H2	D	D1	SW
04350-08	104±2	39	37	20	12	28	74	M8	25	13
04350-10	123±2	49	46	25	16	39	92	M10	30	17
04350-12	146±3	61	58	32	20	49	120	M12	30	19

04360

Spiral cams

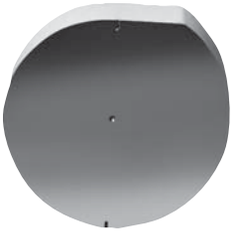

Material:
Profile steel 1.7131.

Version:
Saw cut and deburred.
Centre is centre-punched.
Start and end of spiral is marked.

Sample order:
nlm 04360-14

Note:
Spiral cams are used where something must be self-locking clamped or secured. The cam is operated mechanically, pneumatically or hydraulically using a shaft through the centre or a lever fastened to the side. By pressure failure the self-locking effect is still operative leading to much higher operating safety by pneumatic and hydraulic clamping.

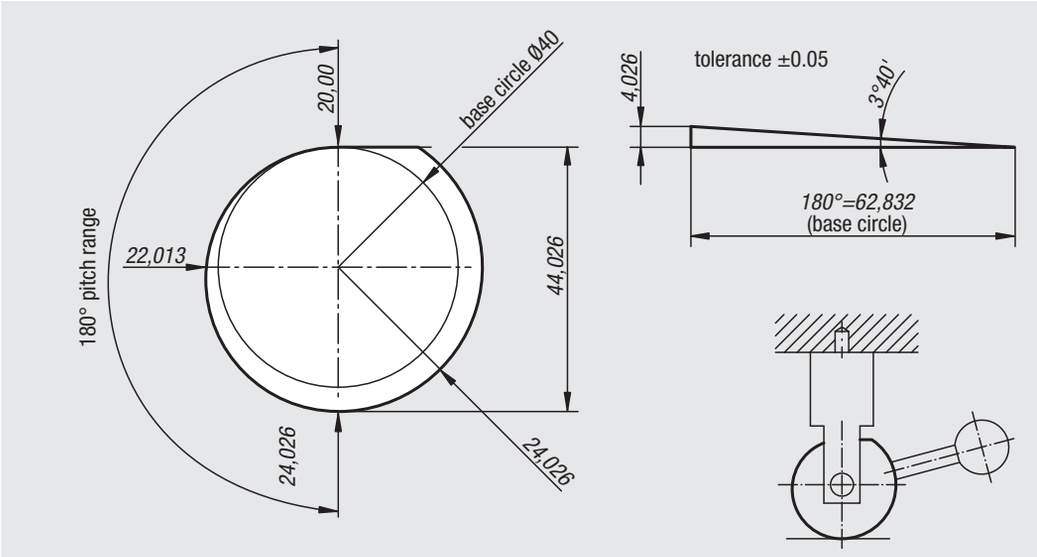

Order No.	base circle Ø	disc thickness
04360-14	40	14
04360-20	40	20

04362

Door latch

Material:
Sintered steel

Sample order:
nlm 04362-108

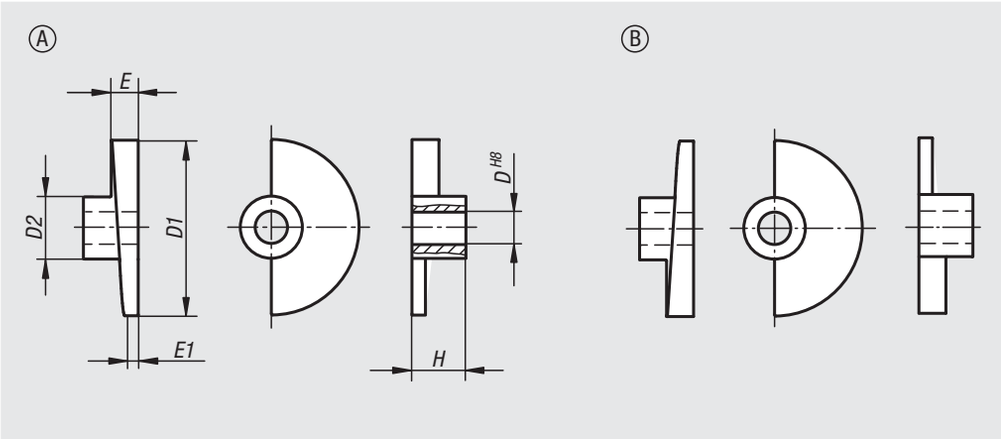

Order No. Form A right	Order No. Form B left	D	D1	D2	E	E1	H
04362-108	**04362-208**	8	35	18	7	3	15
04362-110	**04362-210**	10	35	18	7	3	15
04362-112	**04362-212**	12	65	23	7	5	20
04362-116	**04362-216**	16	80	27	9	6	24

Technical information for swing clamps

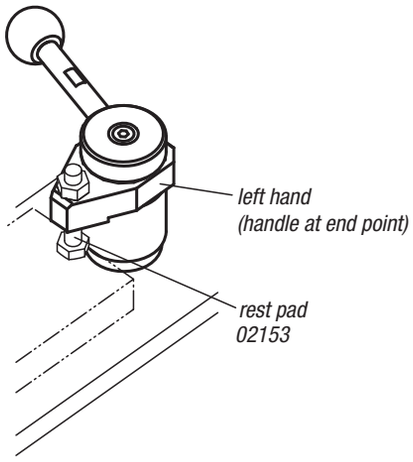

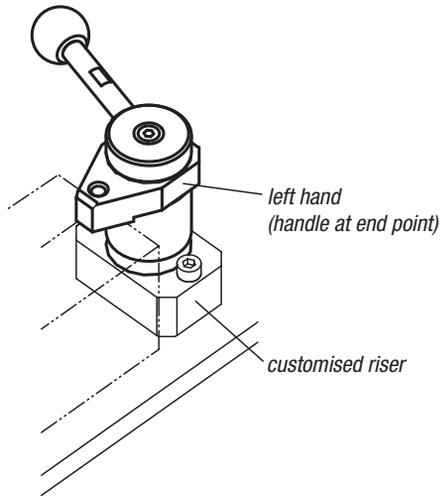

Mounting an attachment

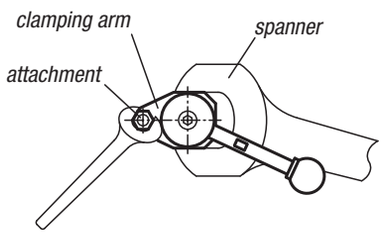

When mounting an attachment on the clamping arm, use a spanner to lock the arm and prevent it from turning.

Notes

Swing clamps

mini, with cam lever

Material:
Carbon steel.

Version:
Tempered and black oxidised.

Sample order:
nlm 04363-0100

Note:
Swing clamps are used where the clamping points must be free when the workpiece is loaded or removed.

* Admissible hand force for the handle.

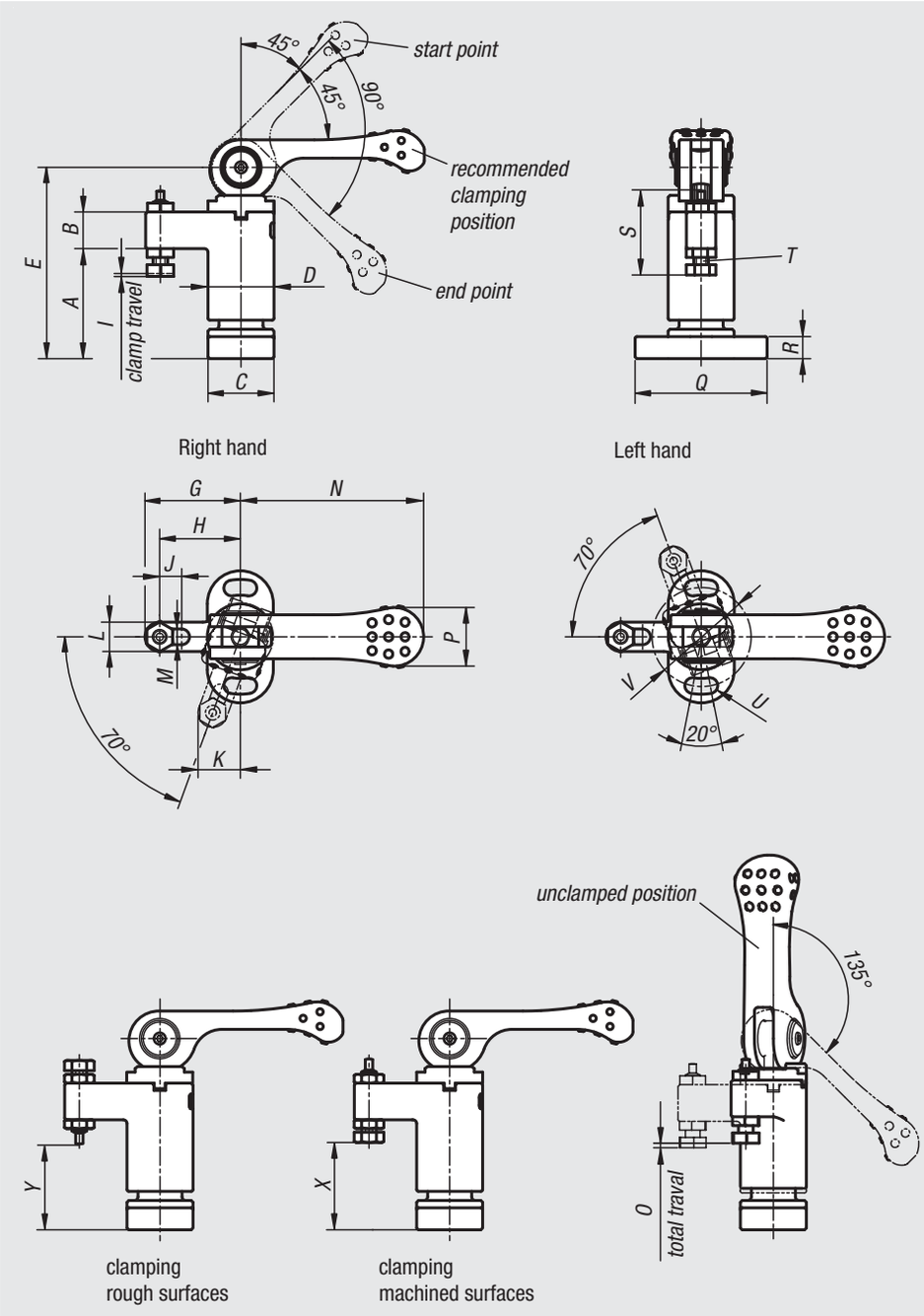

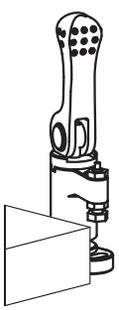

unclamped

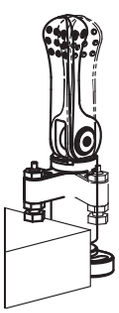

swivel

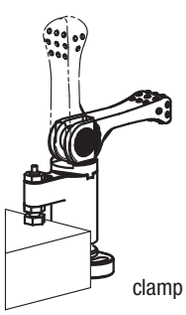

clamp

Order No. left	Order No. right	A	B	C	D	E	G	H	I	J	K	L	M	N	O	P	Q	R	S	T	U	V	X min.	X max.	Y min.	Y max.	Clamping force N	Hand force FH N
04363-0100	**04363-1100**	30	10	18	18	52	26	22	0,8	6	11,5	8	4,3	50	1,2	16	36	6	22,8	M4	4,3	27	22,4	25,2	22	24,8	800	100*
04363-0150	**04363-1150**	40	14	23	23	68	35	30	1	8	15,3	10	5,3	63	1,5	19	45	8	28,5	M5	5,3	34	30,8	33,8	31,7	34,7	1500	150*
04363-0200	**04363-1200**	50	18	30	30	87	45	37	1,2	8	20,7	16	8,4	80	1,8	24	65	12	45,5	M8	8,4	48	31,9	39,6	32,9	40,6	2100	200*
04363-0300	**04363-1300**	60	22	40	40	107	55	45	1,5	8	25,4	20	10,4	100	2,3	30	85	15	57	M10	10,5	64	35,7	46,7	38,2	49,2	2800	300*

Swing clamps mini

Material:
Carbon steel.
Grip plastic.

Version:
Tempered, black oxidised.
Grip black.

Sample order:
nlm 04364-0100

Note:
Swing clamps are used where the clamping points must be free when the workpiece is loaded or removed.

* Admissible hand force for the handle.

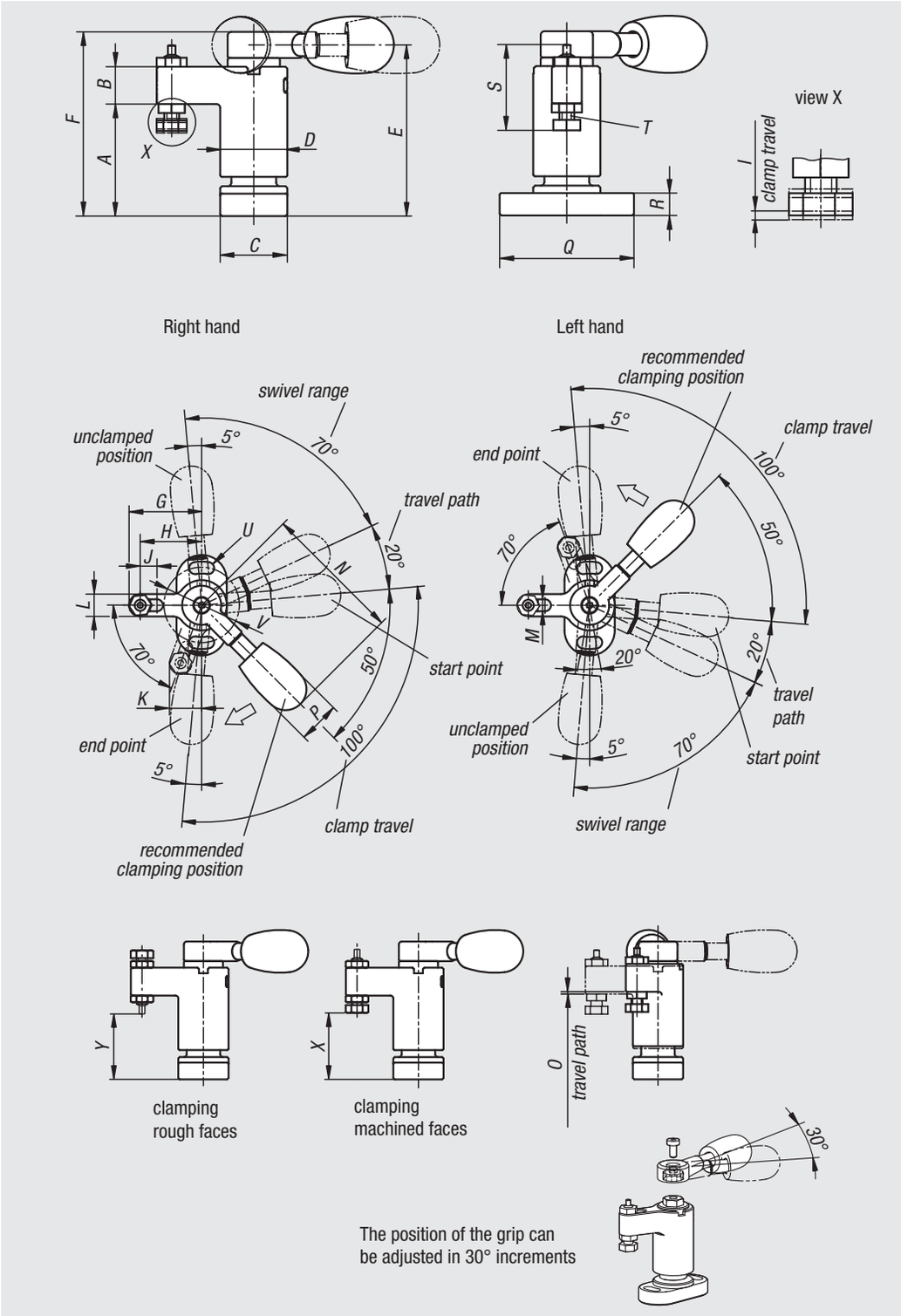

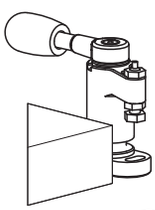
unclamped

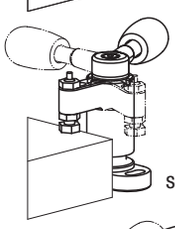
swivel

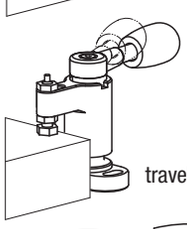
travel path

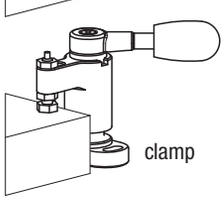
clamp

Order No. left	Order No. right	A	B	C	D	E	F	G	H	I	J	K	L	M	N	O	P	Q	R	S	T	U	V	X min.	X max.	Y min.	Y max.	Clamping force N	Hand force FH N
04364-0100	**04364-1100**	30	10	18	18	45,8	49	26	22	1	6	11,5	8	4,3	50	0,8	15	36	6	22,8	M4	4,3	27	22,3	25,3	21,9	24,9	1100	100*
04364-0150	**04364-1150**	40	14	23	23	61,3	66	35	30	1,4	8	15,3	10	5,3	63	1,1	20	45	8	28,5	M5	5,3	34	30,6	34	31,5	34,9	1800	150*
04364-0200	**04364-1200**	50	18	30	30	76,5	82	45	37	1,5	8	20,7	16	8,4	80	1,4	26	65	12	45,5	M8	8,4	48	31,7	39,7	32,7	40,7	2200	200*
04364-0300	**04364-1300**	60	22	40	40	93	100	55	45	1,9	8	25,4	20	10,4	100	1,7	33	85	15	57	M10	10,5	64	35,5	46,9	38	49,4	3500	300*

Swing clamps

Material:
Carbon steel.
Ball knob plastic.

Version:
Tempered and black oxidised.
Ball knob Duroplast PF 31, black.

Sample order:
nlm 04366-013232

Note:
* Admissible hand force to operate the handle.

Accessories:
Standard handles 06355. Screw-in handles with adjustable torque 06357.

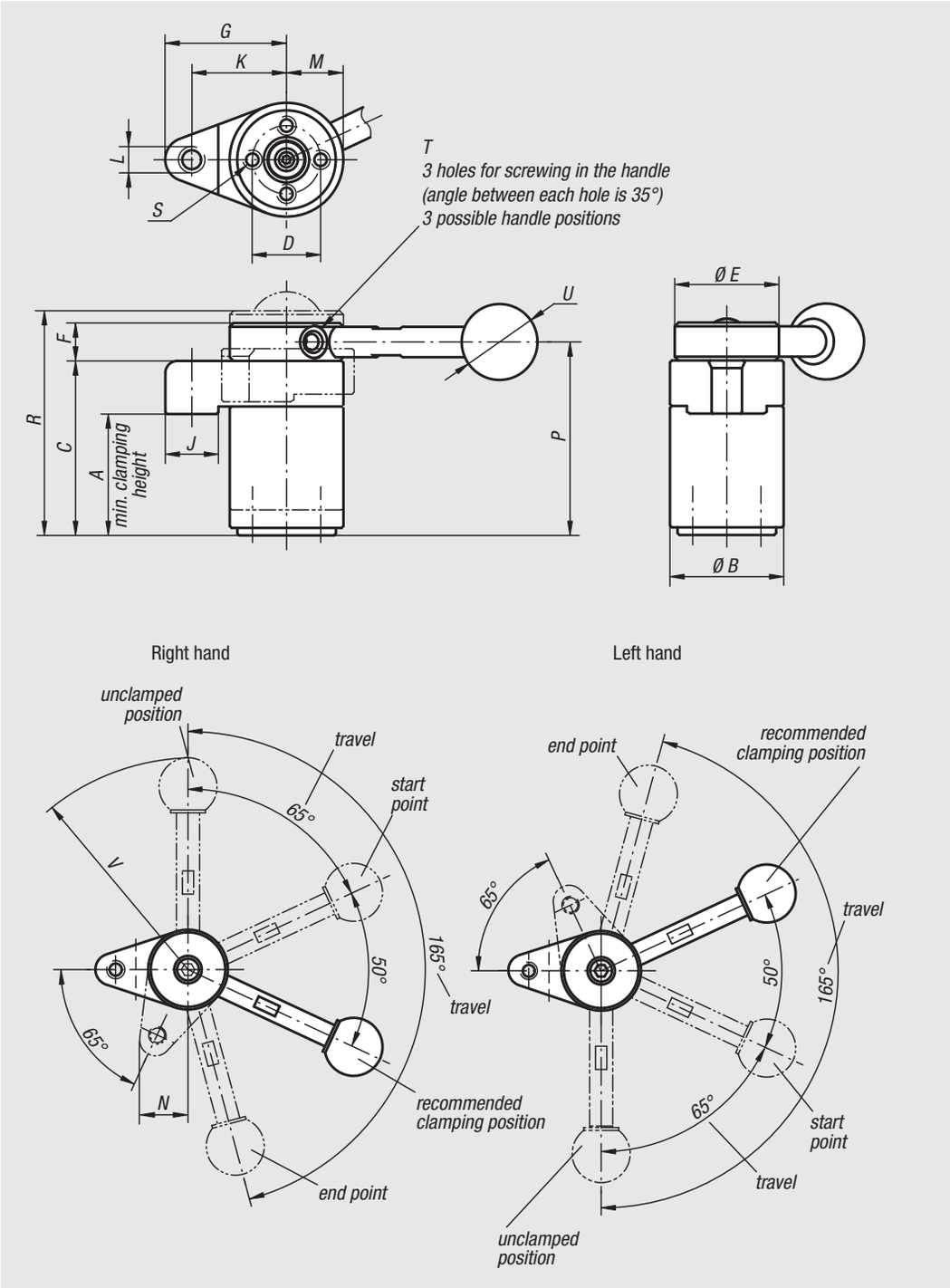

Order No. left	Order No. right	Grip	A min.	A max.	B	C	D	E	F	G	J	K	L	M	N	P	R	S	T	U	V	Clamping force N	Hand force FH N
04366-003232	**04366-103232**	without grip	31,4	32,6	30	46	18	30	10	32	14	25	M6	15	17	51	57,5	M4x8	M5	-	-	800	150*
04366-004540	**04366-104540**	without grip	44,1	45,9	40	63	25	38	13	40	16	32	M8	20	22,5	69,5	78,1	M6x12	M6	-	-	1200	200*
04366-013232	**04366-113232**	with grip	31,4	32,6	30	46	18	30	10	32	14	25	M6	15	17	51	57,5	M4x8	M5	20	73	800	150*
04366-014540	**04366-114540**	with grip	44,1	45,9	40	63	25	38	13	40	16	32	M8	20	22,5	69,5	78,1	M6x12	M6	25	107	1200	200*

Hook clamps

Material:
Carbon steel, tempered.

Version:
Black oxidised.

Sample order:
nlm 04370-10

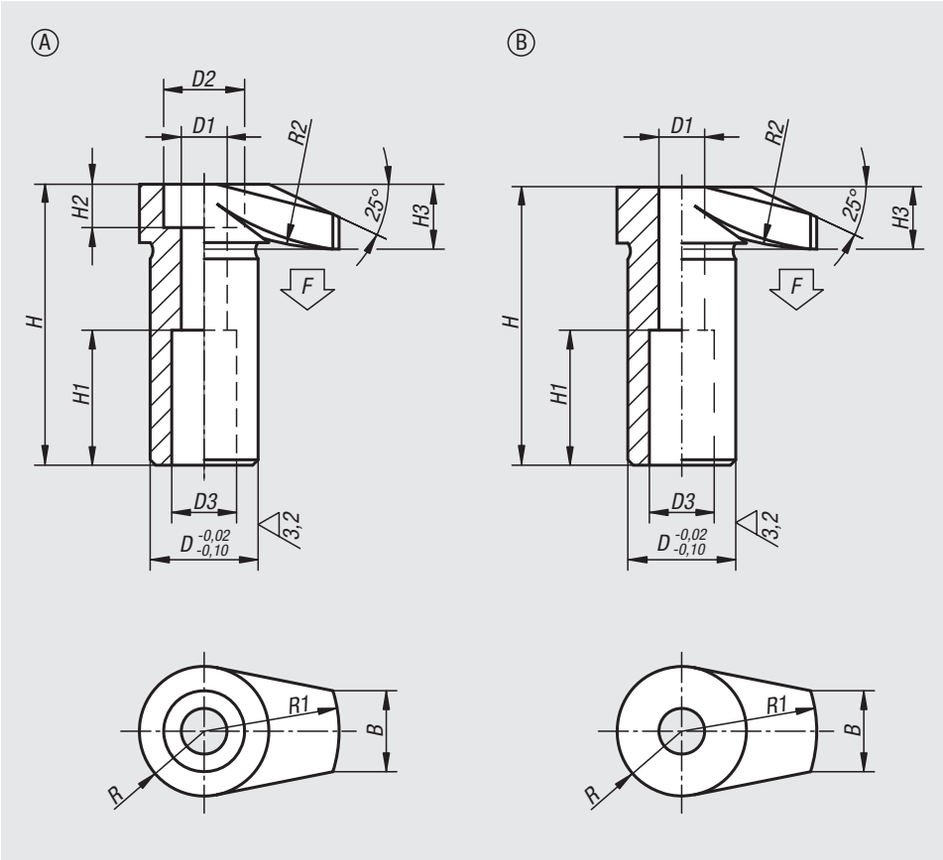

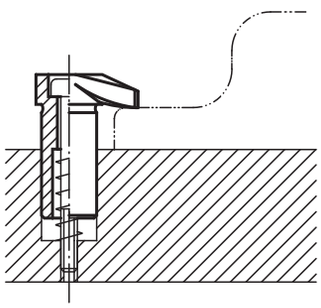

Order No.	Form	D	D1	D2	D3	H	H1	H2	H3	B	R	R1	R2	F max. kN
04370-06	A	16	6,5	11	10	42	20	6	10	11	9	20	30	4,8
04370-08	A	20	8,5	15	12	52	25	8	12	15	12	25	50	8,8
04370-10	A	25	10,5	18	14	66	32	10	16	17	14	32	60	13,9
04370-12	A	32	12,5	20	17	83	40	12	20	20	18	40	80	20,2

Order No.	Form	D	D1	D3	H	H1	H3	B	R	R1	R2	F max. kN
04370-106	B	16	6,5	10	41,5	20	9,5	11	9	20	30	4,8
04370-108	B	20	8,5	12	51,5	25	11,5	15	12	25	50	8,8
04370-110	B	25	10,5	14	65,5	32	15,5	17	14	32	60	13,9
04370-112	B	32	12,5	17	82,5	40	19,5	20	18	40	80	20,2

Hook clamp

with long clamp strap

Material:
Carbon steel, tempered.

Version:
Black oxidised.

Sample order:
nlm 04370-406

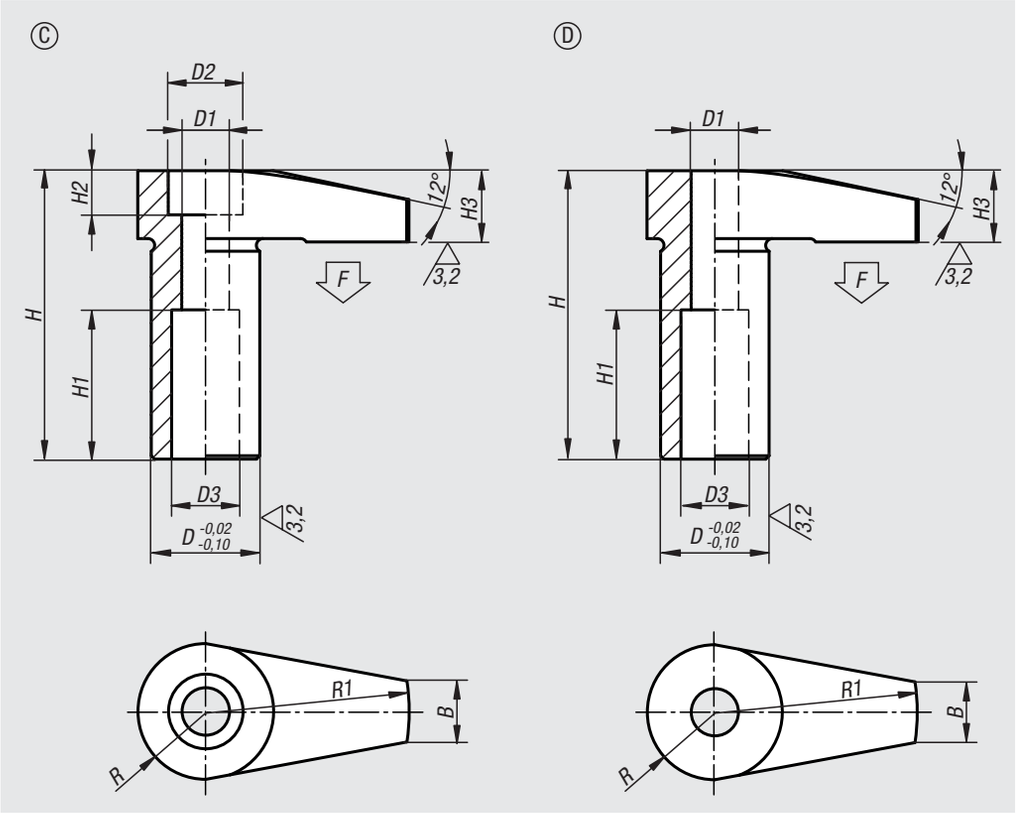

Order No.	Form	B	D	D1	D2	D3	H	H1	H2	H3	R	R1	F max. kN
04370-406	C	9	16	7	11	10	42,5	22	6	10,5	10	30	4,5
04370-408	C	12	20	8,6	15	12	52,5	25	8	12,5	12,5	40	6,5
04370-410	C	18	25	10,6	18	14	66,5	32	10	16,5	16	50	11,8

Order No.	Form	B	D	D1	D3	H	H1	H3	R	R1	F max. kN
04370-506	D	9	16	7	10	42,5	22	10,5	10	30	4,5
04370-508	D	12	20	8,6	12	52,5	25	12,5	12,5	40	6,5
04370-510	D	18	25	10,6	14	66,5	32	16,5	16	50	11,8

Hook clamps

with protective insert

Material:
Carbon steel.
Soft pad POM or polyurethane 99 Shore A.

Version:
Tempered and black oxidised.

Sample order:
nlm 04370-206

Note:
The pressed in plastic inserts offer optimal damage protection for sensitive workpiece faces.

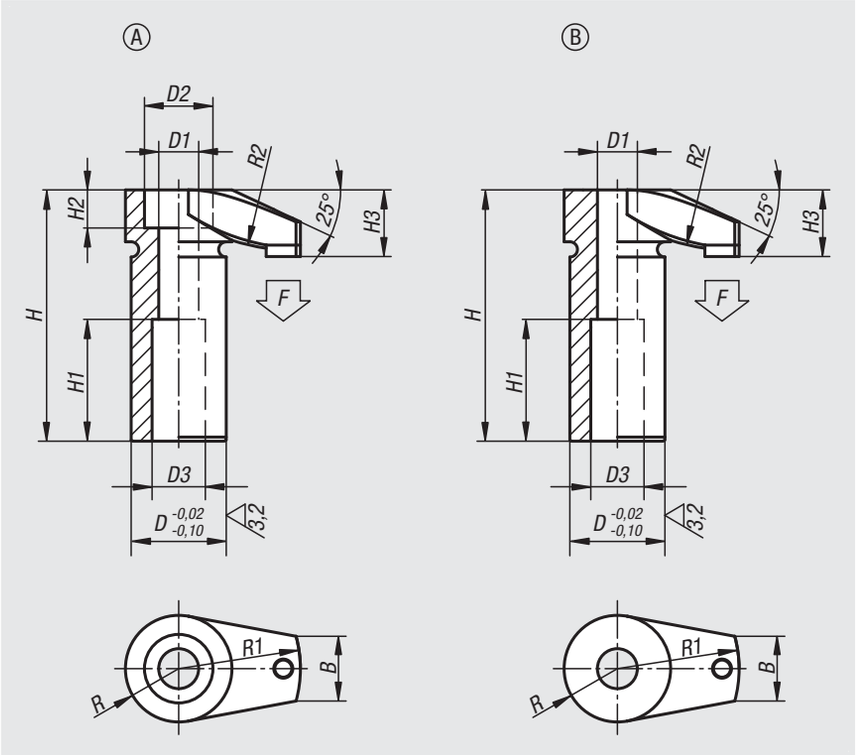

Order No.	Form	Component material	D	D1	D2	D3	H	H1	H2	H3	B	R	R1	R2	F max. kN
04370-206	A	polyacetal	16	6,5	11	10	42	20	6	10,5	11	9	20	30	4,8
04370-208	A	polyacetal	20	8,5	15	12	52	25	8	13,5	15	12	25	50	8,8
04370-210	A	polyacetal	25	10,5	18	14	66	32	10	17,5	17	14	32	60	11,6
04370-212	A	polyacetal	32	12,5	20	17	83	40	12	21	20	18	40	80	18,8
04370-2106	B	polyacetal	16	6,5	-	10	41,5	20	-	10	11	9	20	30	4,8
04370-2108	B	polyacetal	20	8,5	-	12	51,5	25	-	13	15	12	25	50	8,8
04370-2110	B	polyacetal	25	10,5	-	14	65,5	32	-	17	17	14	32	60	11,6
04370-2112	B	polyacetal	32	12,5	-	17	82,5	40	-	21	20	18	40	80	18,8
04370-306	A	polyurethane	16	6,5	11	10	42	20	6	10,5	11	9	20	30	4,8
04370-308	A	polyurethane	20	8,5	15	12	52	25	8	13,5	15	12	25	50	8,8
04370-310	A	polyurethane	25	10,5	18	14	66	32	10	17,5	17	14	32	60	11,6
04370-312	A	polyurethane	32	12,5	20	17	83	40	12	21	20	18	40	80	18,8
04370-3106	B	polyurethane	16	6,5	-	10	41,5	20	-	10	11	9	20	30	4,8
04370-3108	B	polyurethane	20	8,5	-	12	51,5	25	-	13	15	12	25	50	8,8
04370-3110	B	polyurethane	25	10,5	-	14	65,5	32	-	17	17	14	32	60	11,6
04370-3112	B	polyurethane	32	12,5	-	17	82,5	40	-	21	20	18	40	80	18,8

Hook clamps

with collar

Material:
Carbon steel.

Version:
Tempered and black oxidised.

Sample order:
nlm 04371-06

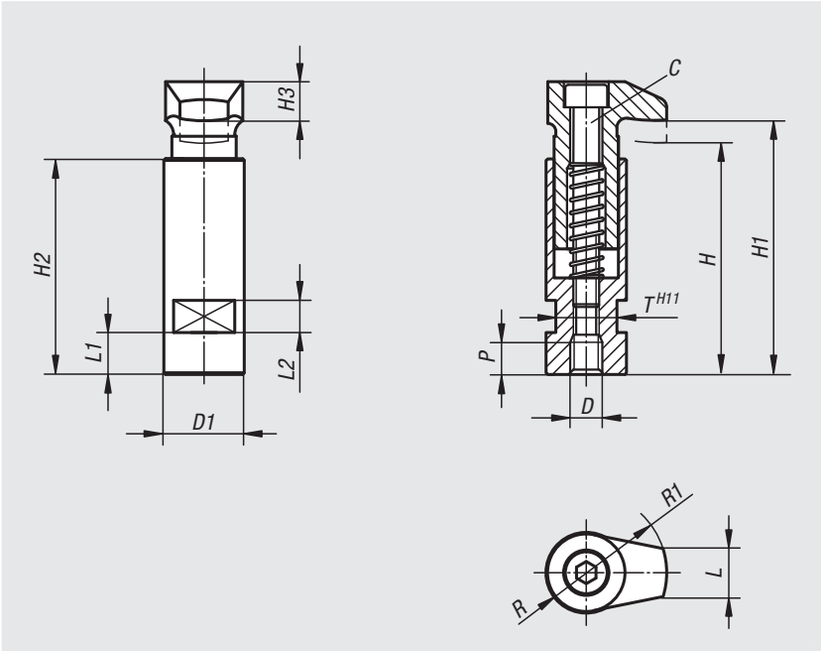

Order No.	C	D	D1	H	H1	H2	H3	L	L1	L2	P	R	R1	T	Clamping force kN
04371-06	M6	M6	20	56	60	53	10	11	9	8	8	9	20	17	4,82
04371-08	M6	M8	20	56	60	53	10	11	9	8	8	9	20	17	8,77
04371-10	M8	M10	25	72	79	67	12	15	13	10	10	12	25	19	13,9
04371-12	M10	M12	32	88	96	82	16	17	18	12	12	14	32	27	20,2
04371-16	M12	M16	40	109	118	102	20	20	22	12	16	18	40	32	37,8

Hook clamps

with collar and cam lever

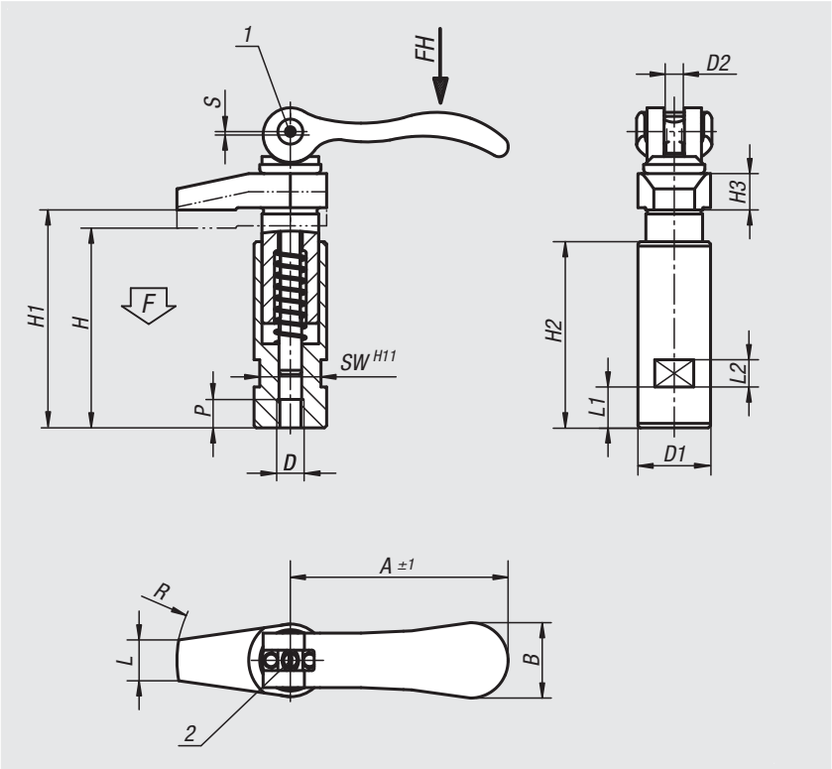

Material:
Body and hook, carbon steel.
Handles, cast aluminium EN AC-46200.
Thrust washer, plastic PA 66 GF 35-X, fibreglass reinforced.
Hinge pin, stud and washer stainless steel 1.4305.

Version:
Body and hook tempered and black oxidised.
Handles, black powder-coated.
Thrust washer black.
Hinge pin, stud and washer bright.

Sample order:
nlm 04371-106

Note:
Ideal for clamping where the parts are to be inserted from above as the hook can be swivelled out of the way.

The exact clamping height is set by the fine thread on the stud using a screwdriver. This setting can be secured with the locking screw. The length S corresponds to the cam travel.

Drawing reference:
1) Locking screw for pin
2) Screw for fine adjustment of lever

Order No.	D	D1	D2	H	H1	H2	H3	L	L1	L2	A	B	P	R	SW	Stroke S	F kN	Hand force FH N
04371-106	M6	20	M6x0,5	56	60	53	10	9	9	8	70,4	21,5	8	30	17	1,2	4	120
04371-108	M8	20	M6x0,5	56	60	53	10	9	9	8	70,4	21,5	8	30	17	1,2	4	120
04371-110	M10	25	M8x0,75	72	79	67	12	12	13	10	96	33,3	10	40	19	1,5	8	350
04371-112	M12	32	M8x0,75	88	96	82	15	18	18	12	96	33,3	12	50	27	1,5	8	350

Hook clamps

with collar and cam lever

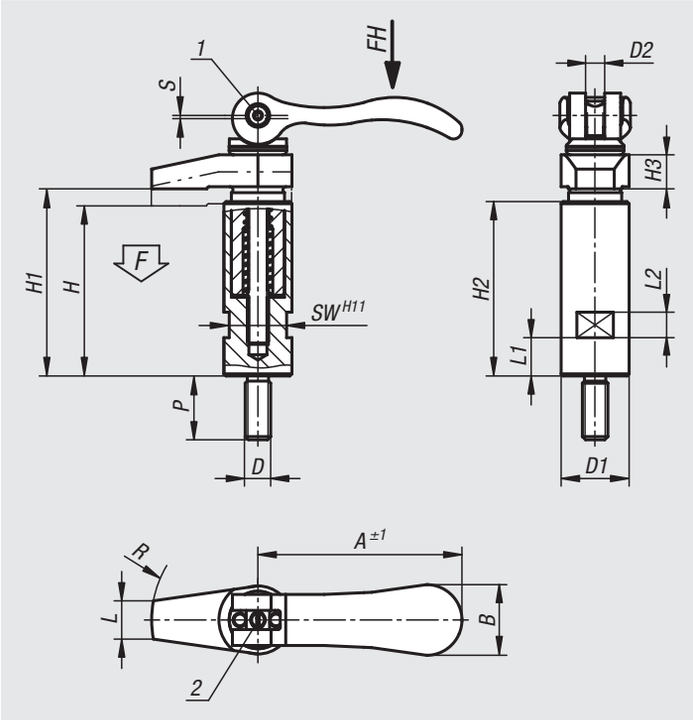

Material:
Body and hook, carbon steel.
Handles, cast aluminium EN AC-46200.
Thrust washer, plastic PA 66 GF 35-X, fibreglass reinforced.
Hinge pin, stud and washer stainless steel 1.4305.

Version:
Body and hook tempered and black oxidised.
Handles, black powder-coated.
Thrust washer black.
Hinge pin, stud and washer bright.

Sample order:
nlm 04371-208

Note:
Ideal for clamping where the parts are to be inserted from above as the hook can be swivelled out of the way.

The exact clamping height is set by the fine thread on the stud using a screwdriver. This setting can be secured with the locking screw. The length S corresponds to the cam travel.

Drawing reference:
1) Locking screw for pin
2) Screw for fine adjustment of lever

Order No.	D	D1	D2	H	H1	H2	H3	L	L1	L2	A	B	P	R	SW	Stroke S	F kN	Hand force FH N
04371-206	M6	20	M6x0,5	56	60	53	10	9	9	8	70,4	21,5	20	30	17	1,2	4	120
04371-208	M8	20	M6x0,5	56	60	53	10	9	9	8	70,4	21,5	20	30	17	1,2	4	120
04371-210	M10	25	M8x0,75	72	79	67	12	12	13	10	96	33,3	25	40	19	1,5	8	350
04371-212	M12	32	M8x0,75	88	96	82	18	18	18	12	96	33,3	30	50	27	1,5	8	350

Hook clamps ground

Form A/B/C

Material:
Carbon steel, tempered.

Version:
Black oxidised. Shaft OD ground.

Sample order:
nlm 04372-216040

Note:
The stated clamping forces (F max.) and tightening torques are valid within the stated clamping ranges (H5).

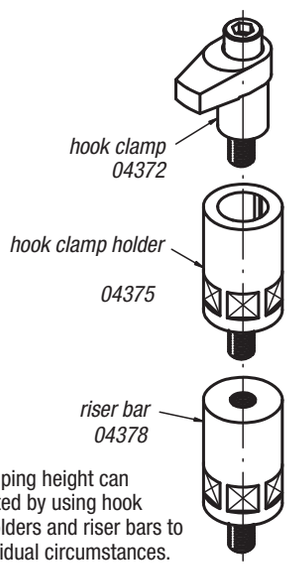

The clamping height can be adjusted by using hook clamp holders and riser bars to suit individual circumstances.

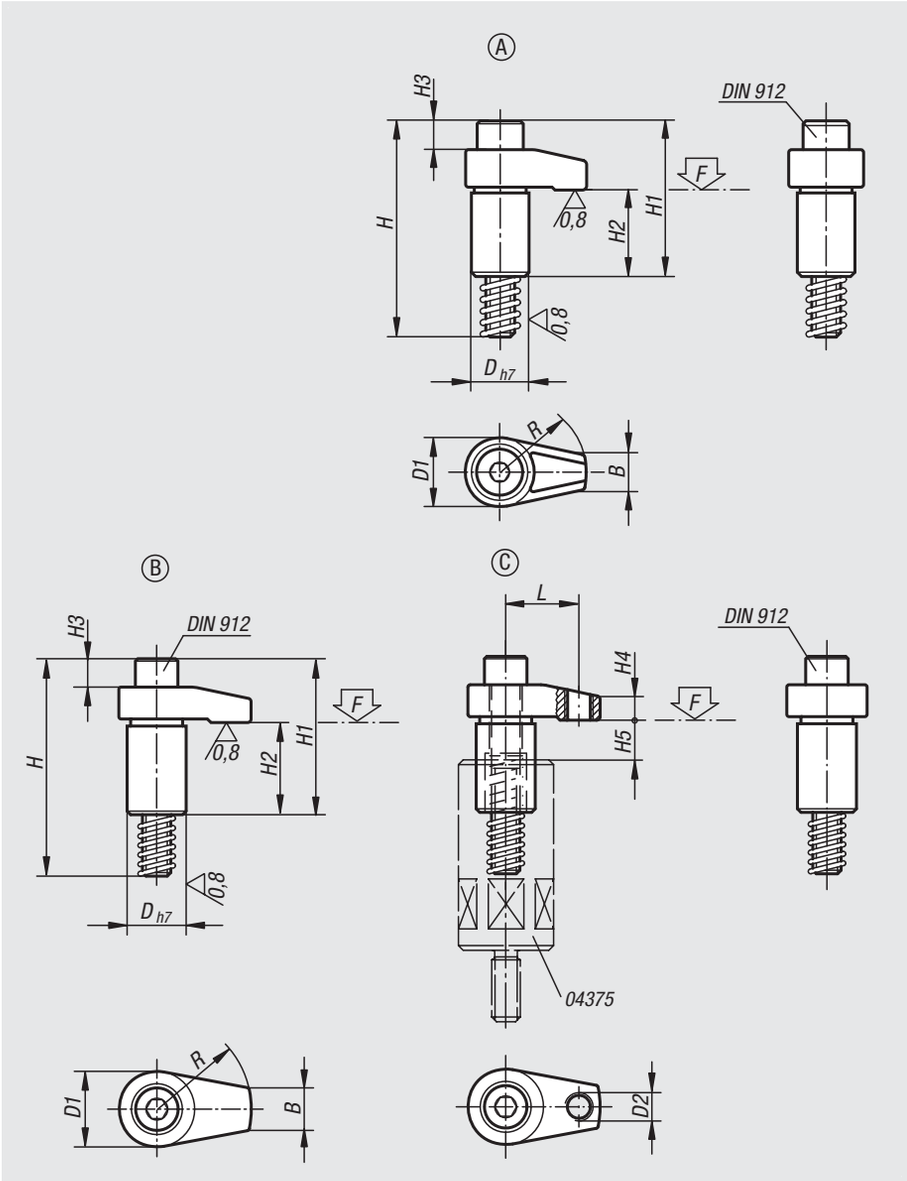

Order No.	Form	D	D1	D2	H	H1	H2	H3	H4	H5 max. clamping range	B	L	R	Socket head screw DIN 912	Tightening torque max. Nm	F max. kN
04372-110030	A	20	25	-	75	54	30	9	10	12	12	-	30	M10x65	37,2	13
04372-110040	A	20	25	-	75	54	30	9	10	12	12	-	40	M10x65	31,4	9,8
04372-208020	B	18	22	-	58	37	23	2	7	10	10	-	20	M8x50	37,2	13,6
04372-208025	B	18	22	-	58	37	23	2	7	10	10	-	25	M8x50	32,3	10,9
04372-208030	B	18	22	-	58	37	23	2	7	10	10	-	30	M8x50	29,4	9
04372-212040	B	25	32	-	92	66	39	11	12	15	18	-	40	M12x80	58,8	17,5
04372-212050	B	25	32	-	92	68	39	11	12	15	18	-	50	M12x80	49	14
04372-212060	B	25	32	-	92	68	39	11	12	15	18	-	60	M12x80	45,1	11,6
04372-216040	B	32	36	-	101	75	39	15	15	15	22	-	40	M16x85	166,6	37,9
04372-216050	B	32	36	-	101	75	39	15	15	15	22	-	50	M16x85	147	30,4
04372-216060	B	32	36	-	101	75	39	15	15	15	22	-	60	M16x85	127,4	25,2
04372-312140	C	25	32	M12	92	66	39	11	10	15	18	31	40	M12x80	58,8	22,6
04372-312150	C	25	32	M12	92	68	39	11	13	15	18	38	50	M12x80	49	18,5
04372-312160	C	25	32	M12	92	68	39	11	13	15	18	46	60	M12x80	45,1	15,2
04372-316150	C	32	36	M12	101	75	39	15	16	15	22	38	50	M16x85	147	38
04372-316160	C	32	36	M12	101	75	39	15	16	15	22	46	60	M16x85	127,4	33

Hook clamps

with collar

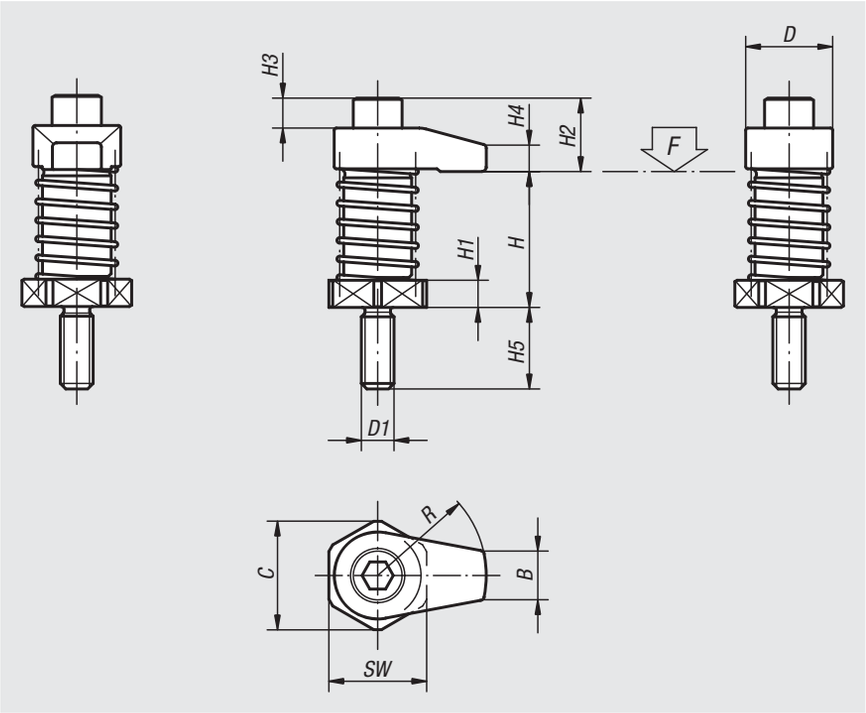

Material:
Hook clamps and hook clamp holders carbon steel, tempered.

Version:
Black oxidised.

Sample order:
nlm 04373-12060

Note:
Hook clamps with collars can be screwed directly into grid holes etc. with or without counterbore.
For suitable height adjustment elements see risers 04378.

Order No.	D	D1	H clamping range	H1	H2	H3	H4	H5	B	C	R	SW	Tightening torque max. Nm	F max. kN
04373-08020	22	M8	35 - 45	6	14	2	7	19	10	25	20	22	20	7,9
04373-08025	22	M8	35 - 45	6	14	2	7	19	10	25	25	22	20	7,3
04373-08030	22	M8	35 - 45	6	14	2	7	19	10	25	30	22	20	6,7
04373-08120	22	M8	45 - 55	16	14	2	7	19	10	25	20	22	20	7,9
04373-08125	22	M8	45 - 55	16	14	2	7	19	10	25	25	22	20	7,3
04373-08130	22	M8	45 - 55	16	14	2	7	19	10	25	30	22	20	6,7
04373-12040	32	M12	50 - 65	10	27	11	10	30	18	40	40	36	45	13,5
04373-12050	32	M12	50 - 65	10	29	11	12	30	18	40	50	36	45	12,6
04373-12060	32	M12	50 - 65	10	29	11	12	30	18	40	60	36	45	11,7
04373-12140	32	M12	65 - 80	25	27	11	10	30	18	40	40	36	45	13,5
04373-12150	32	M12	65 - 80	25	29	11	12	30	18	40	50	36	45	12,6
04373-12160	32	M12	65 - 80	25	29	11	12	30	18	40	60	36	45	11,7
04373-16040	36	M16	50 - 65	10	36	15	15	30	22	40	40	36	60	13,4
04373-16050	36	M16	50 - 65	10	36	15	15	30	22	40	50	36	60	12,4
04373-16060	36	M16	50 - 65	10	36	15	15	30	22	40	60	36	60	12
04373-16140	36	M16	65 - 80	25	36	15	15	30	22	40	40	36	60	13,4
04373-16150	36	M16	65 - 80	25	36	15	15	30	22	40	50	36	60	12,4
04373-16160	36	M16	65 - 80	25	36	15	15	30	22	40	60	36	60	12

Hook clamps

with mounting bracket

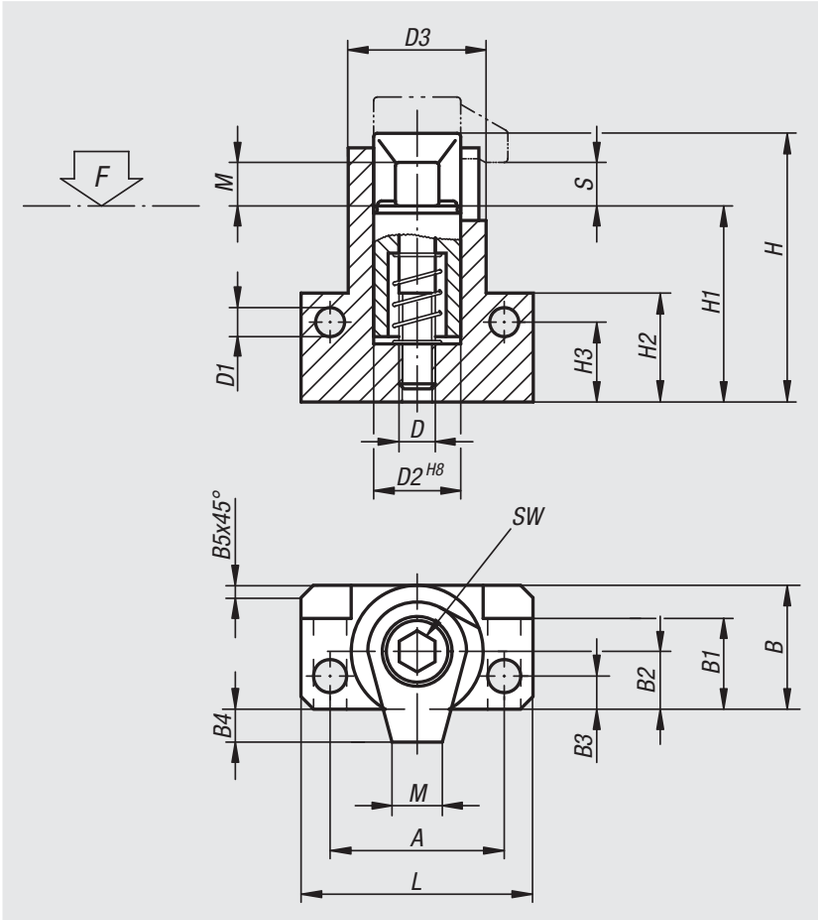

Material:
Hook clamps and clamping screw carbon steel, tempered.

Version:
Black oxidised.

Sample order:
nlm 04374-12

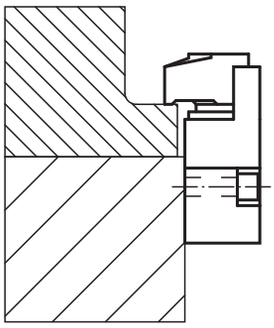

Order No.	D	D1	D2	D3	A	B	B1	B2	B3	B4	B5	H	H1	H2	H3	L	M	S	SW	Tightening torque max. Nm	F max. kN
04374-08	M8	6,4	20	28	38	26	19,5	12	6	6	2,5	62	47,5	25	18	50	10	4	6	30	17
04374-10	M10	8,4	24	34	48	31	22,5	14	7,5	9	3	74	57,5	30	21	64	12	5	8	50	18
04374-12	M12	10,5	28	40	55	36,5	26	16,5	9	10,5	3,5	87	67	35	24	75	15	5	10	60	20
04374-16	M16	12,8	34	48	65	43,5	31	19,5	10	16,5	4	112	87	45	32	88	20	5	14	120	24

Hook clamp holders

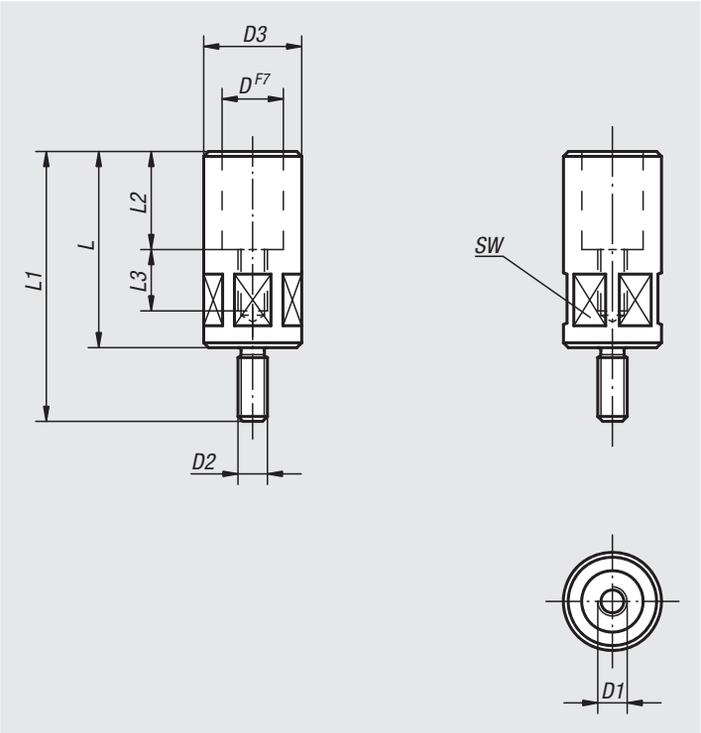

Material:
Carbon steel.

Version:
Black oxidised.

Sample order:
nlm 04375-12080

Note:
Hook clamp holders are for holding and raising hook clamps.

Order No.	D	D1	D2	D3	L	L1	L2	L3	SW	Tightening torque max. Nm
04375-08055	18	M8	M8	24	55	74	25	20	22	29,4
04375-10063	20	M10	M12	32	63	93	30	21	30	39,2
04375-10080	20	M10	M12	32	80	110	30	23	30	39,2
04375-12080	25	M12	M12	40	80	110	40	25	36	49
04375-12100	25	M12	M12	40	100	130	40	28	36	49
04375-16080	32	M16	M16	50	80	110	40	25	46	78,4
04375-16100	32	M16	M16	50	100	130	40	28	46	78,4

Riser bars

Material:
Carbon steel.

Version:
Black oxidised.

Sample order:
nlm 04378-16050

Note:
The height of the hook clamps and hook clamp holders can be raised using these riser bars.

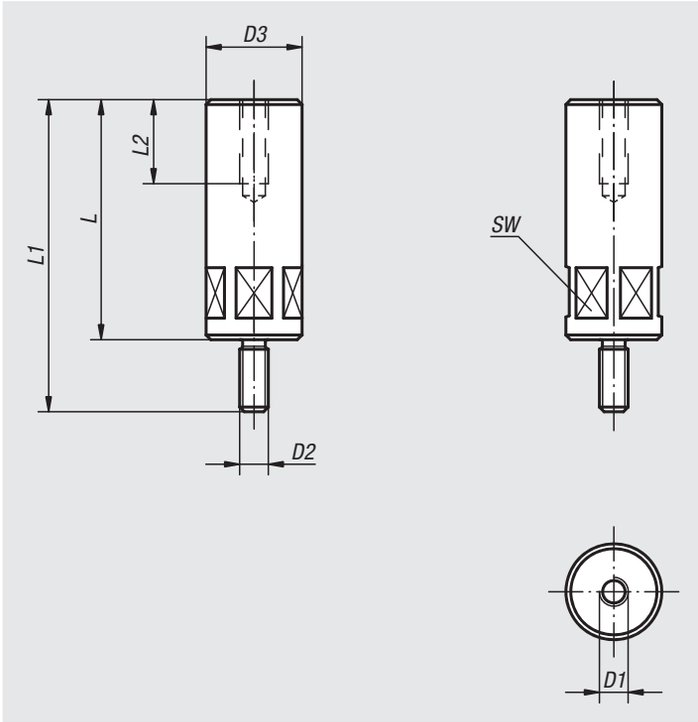

Order No.	D1	D2	D3	L	L1	L2	SW	Tightening torque max. Nm
04378-08032	M8	M8	24	32	51	20	22	29,4
04378-08040	M8	M8	24	40	59	20	22	29,4
04378-08050	M8	M8	24	50	69	20	22	29,4
04378-08065	M8	M8	24	65	84	20	22	29,4
04378-12050	M12	M12	40	50	80	35	36	49
04378-12065	M12	M12	40	65	95	35	36	49
04378-12080	M12	M12	40	80	110	35	36	49
04378-12100	M12	M12	40	100	130	35	36	49
04378-12125	M12	M12	40	125	155	35	36	49
04378-12160	M12	M12	40	160	190	35	36	49
04378-12200	M12	M12	40	200	230	35	36	49
04378-16050	M16	M16	50	50	80	35	46	78,4
04378-16065	M16	M16	50	65	95	35	46	78,4
04378-16080	M16	M16	50	80	110	35	46	78,4
04378-16100	M16	M16	50	100	130	35	46	78,4
04378-16125	M16	M16	50	125	155	35	46	78,4
04378-16160	M16	M16	60	160	190	35	55	78,4
04378-16200	M16	M16	60	200	230	35	55	78,4

04380

Hook clamps precision

Material:
Steel.

Version:
Case-hardened, black oxidised and ground.

Sample order:
nlm 04380-00

Note:
Precision hook clamps are used as conventional clamping elements in fixtures.
A reamed hole is drilled into the fixture base. The hole depth depends on the required clamping height. A support is placed under the rear rounded hook part (radius 22) to take the counterforce, this can be flat, semicircular or prismatic. A DIN 933 hex. head screw tightens the clamp.

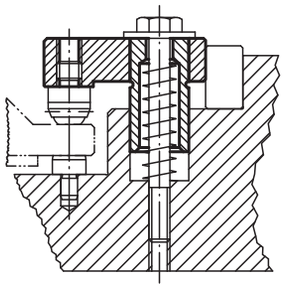

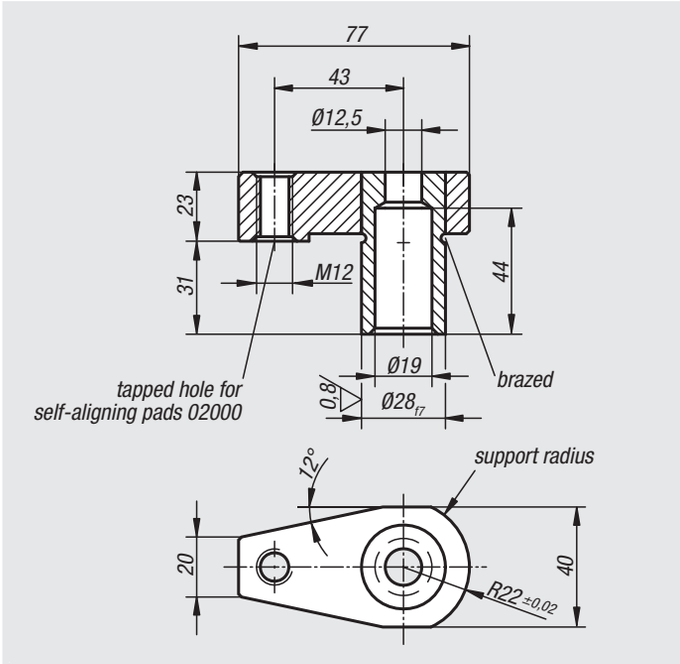

Order No.	Dimensions
04380-00	see drawing

04390

Swing clamps

Material:
Body malleable iron.
Sleeve carbon steel 1.1191.
Screw carbon steel 1.1181.
Thrust pad mild steel 1.0301.

Version:
Painted.
Thrust pads case-hardened.

Sample order:
nlm 04390-01

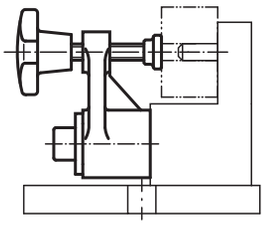

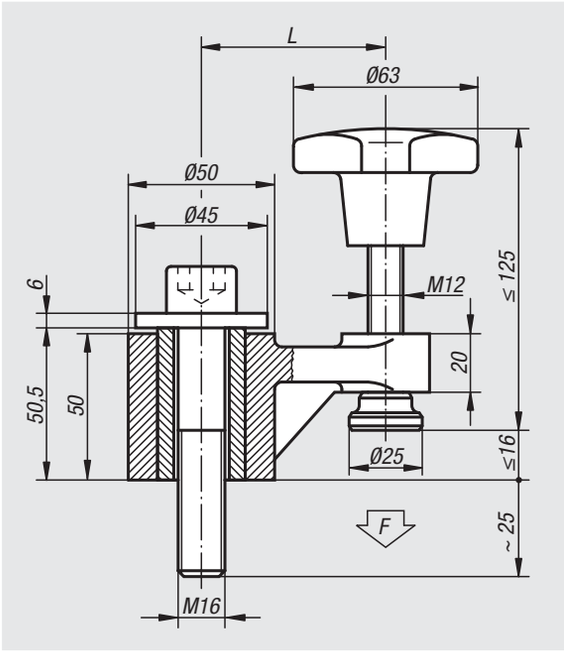

Order No.	L	F kN
04390-01	63	5
04390-02	100	3

Clamping bolts

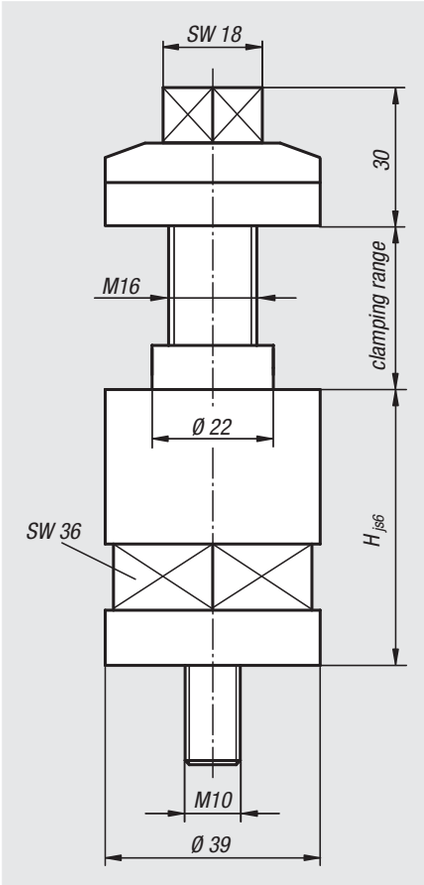

Material:
Clamping bolt, steel.
Clamping screw, carbon steel.
Clamping ring brass.

Version:
Clamping bolt hardened and black oxidised.
Clamping screw black oxidised.
Clamping ring bright.

Sample order:
nlm 04395-050

Note:
The clamping bolts can be fixed to the machine table directly with T-slot nuts. Clamping parallel to the table is guaranteed by low tolerance classes (js6) for the height.
The clamping range is 8 – 40 mm. Clamping screws for the ranges 40 – 67 and 65 – 87 mm are also available.
The intermediate plate prevents damage to the machine table, as well as shifting during tightening. The brass clamping ring prevents impressions on the workpiece.

Clamping bolts

Order No.	H	Clamp range
04395-050	50	8 - 40
04395-100	100	8 - 40

Clamping screws

Order No.	Clamp range
04395-4067	40 - 67
04395-6587	65 - 87

Clamping pins

Material:
Carbon steel.

Version:
Pins tempered and ground.
Knurled knob tempered, black oxidised.

Sample order:
nlm 04400-005050

Note:
* The clamping pin can be altered to suit the workpiece thickness.

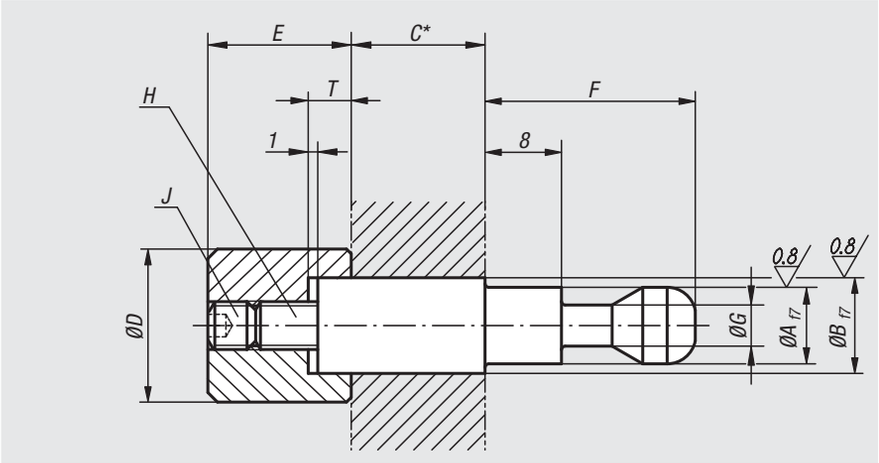

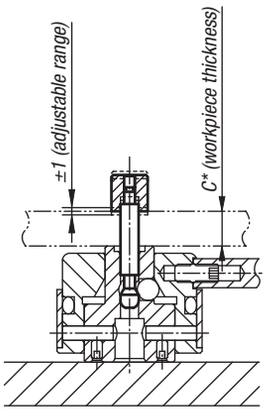

Order No.	A	B	C	D	E	F	G	H	J	T
04400-005050	5	5	50	10	10	17	3	M3	M3x4	3
04400-006050	5	6	50	10	10	17	3	M3	M3x4	3
04400-008080	8	8	80	16	15	22	4,3	M5	M5x5	4,5
04400-010080	8	10	80	16	15	22	4,3	M5	M5x5	4,5

Clamping pins (high force)

Material:
Carbon steel.

Version:
Pins tempered and ground.
Knurled knob tempered, black oxidised.

Sample order:
nlm 04400-412100

Note:
* The clamping pin can be altered to suit the workpiece thickness.

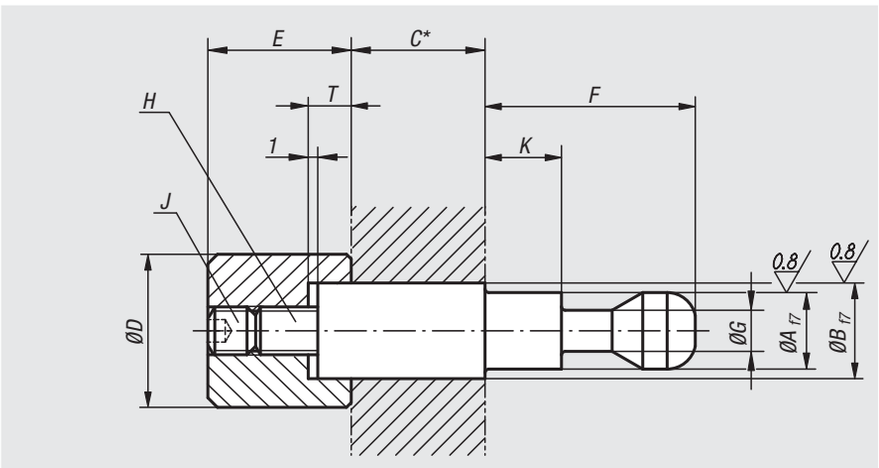

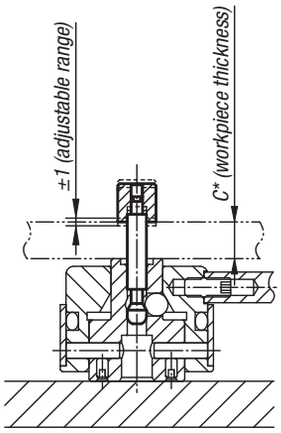

Order No.	A	B	C	D	E	F	G	H	J	K	T	Suitable for
04400-412100	12	12	100	18	23	38	6,5	M8	M8x8	21,5	7	04400-506501
04400-416100	12	16	100	24	23	38	6,5	M8	M8x8	21,5	7	04400-506501
04400-516120	16	16	120	24	29	48	9,5	M10	M10x10	28	9	04400-638001
04400-520120	16	20	120	30	29	48	9,5	M10	M10x10	28	9	04400-638001

Clamping screws

Material:
Carbon steel.

Version:
Tempered and black oxidised.

Sample order:
nlm 04400-105060

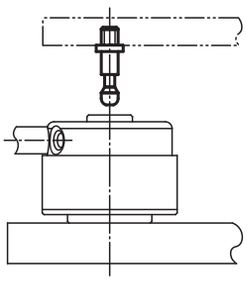

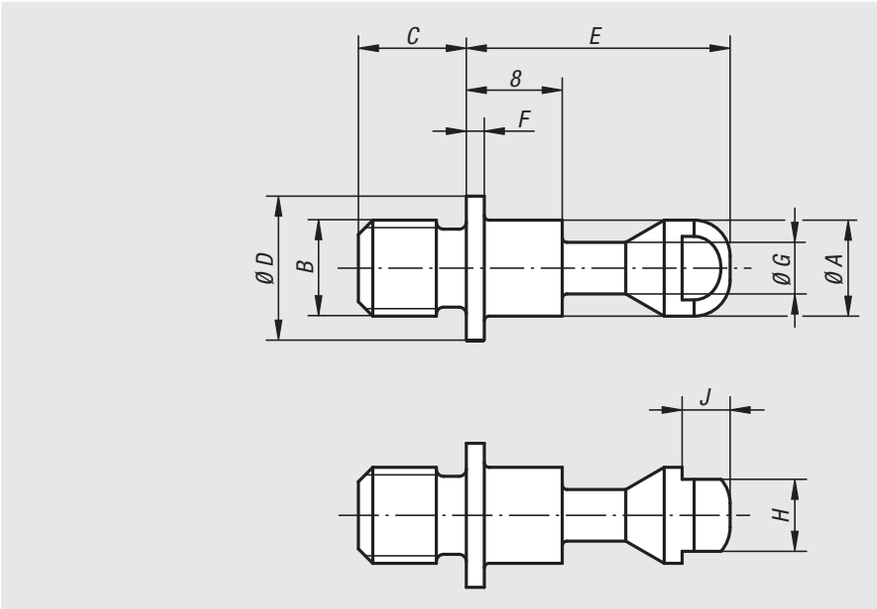

Order No.	A	B	C	D	E	F	G	H	J
04400-105060	5	M5	6	8	17	1,2	3	4	2,5
04400-106070	5	M6	7	8	17	1,2	3	4	2,5
04400-108090	8	M8	9	12	22	1,5	4,3	6	4
04400-110110	8	M10	11	12	22	1,5	4,3	6	4

Clamping screws (high force)

Material:
Carbon steel.

Version:
Tempered and black oxidised.

Sample order:
nlm 04400-1412013

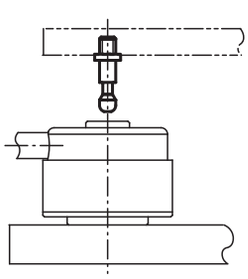

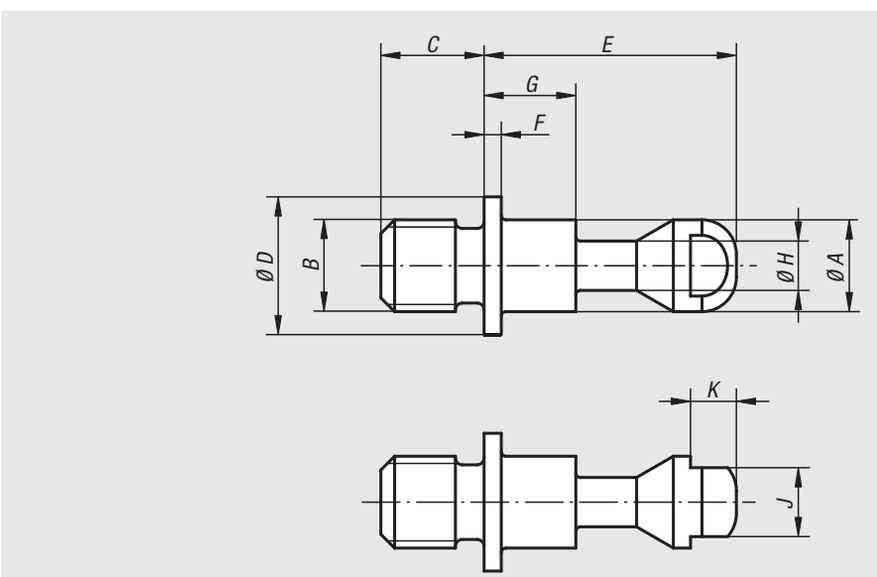

Order No.	A	B	C	D	E	F	G	H	J	K	Suitable for
04400-1412013	12	M12	13	20	38	2	21,5	6,5	10	4	04400-506501
04400-1416017	12	M16	17	20	38	2	21,5	6,5	10	4	04400-506501
04400-1516017	16	M16	17	25	48	2,5	28	9,5	13	5	04400-638001
04400-1520021	16	M20	21	25	48	2,5	28	9,5	13	5	04400-638001

Technical information for pull clamps

Workpiece positioning

Clamping using a pull clamp and clamping pin

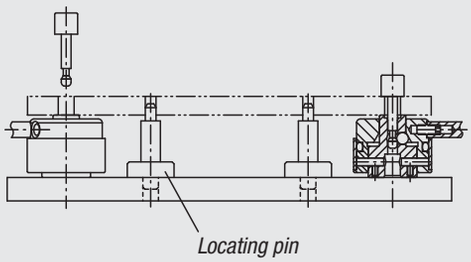

Simultaneous clamping and positioning of a workpiece

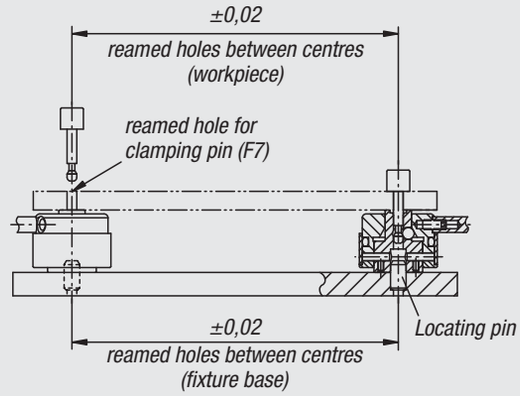

Holding forces for workpiece processing

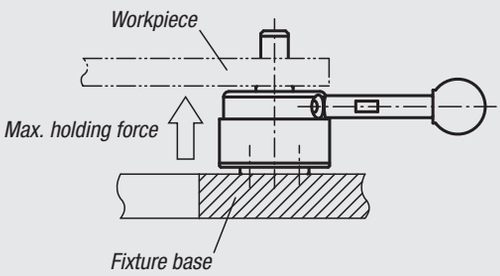

Make sure that no force on the underside of the workpiece exceeds the values given in the table.

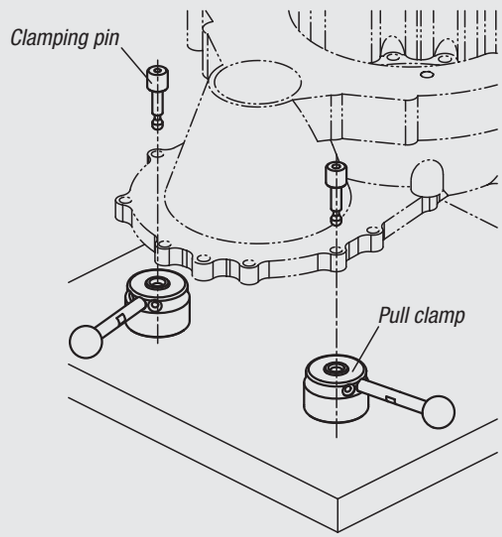

Example using pull clamps

Performance curve

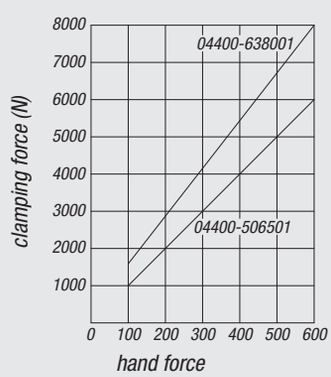

Pull clamps

Material:
Housing and cam tool steel.
Grip carbon steel.
Ball knob Duroplast PF 31.

Version:
Housing and cam hardened and black oxidised.
Grip black oxidised.
Ball knob black.

Sample order:
nlm 04400-324001

Note:
* Max. workpiece thickness see clamping pin 04400 (dimension C).
** Admissible hand force for the handle.

Accessories:
Standard handles 06355.
Screw-in handles with adjustable torque 06357.

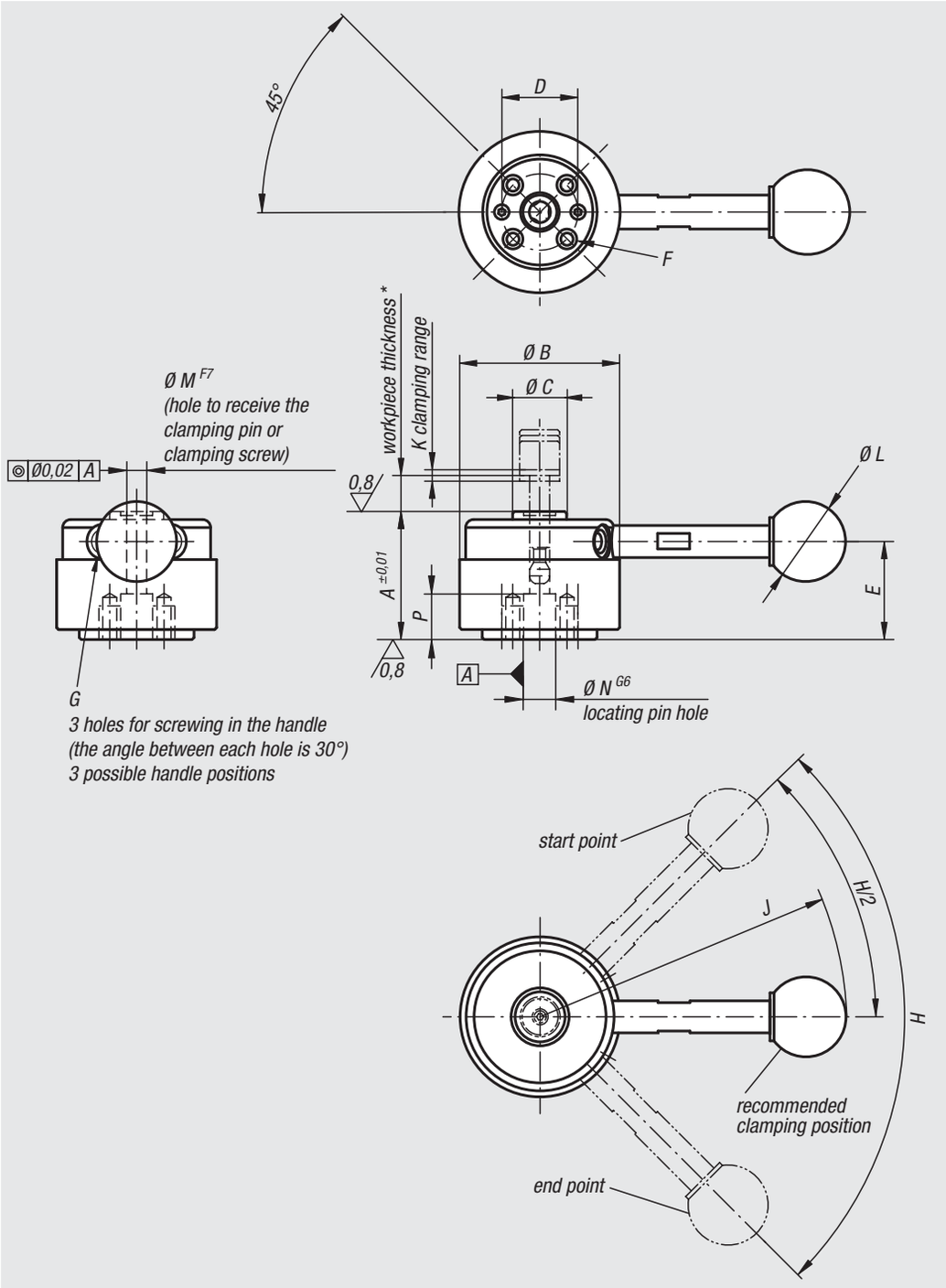

Order No.	Version	A	B	C	D	E	F	G	H	J	K	L	M	N	P	Clamping force N	Recommended workpiece thickness tolerance	Hand force FH N	Holding force N
04400-324000	without grip	32	40	13,5	18	24,5	M4x8	M5	90°	-	1,5	-	5	8	10	900	±0,3*	150**	2000
04400-324001	with grip	32	40	13,5	18	24,5	M4x8	M5	90°	76,5	1,5	20	5	8	10	900	±0,3*	150**	2000
04400-405000	without grip	40	50	18	25	30,7	M6x9	M6	110°	-	2	-	8	12	13	2500	±0,5*	200**	5500
04400-405001	with grip	40	50	18	25	30,7	M6x9	M6	110°	111,5	2	25	8	12	13	2500	±0,5*	200**	5500

Pull clamps (high force)

Material:
Housing, clamping ring and handles, carbon steel.
Grip Duroplast PF 31.

Version:
Housing and clamping ring hardened and black oxidised.
Handles black oxidised.
Grip black.

Sample order:
nlm 04400-506501

Note:
When clamping with a high force clamping pin the recommended workpiece tolerances must be maintained. The grip lever must be lay between the recommended clamping position and end point for safe clamping.

* Max. workpiece thickness see clamping pin 04400 (dimension C).
** Permitted manual force for handle.

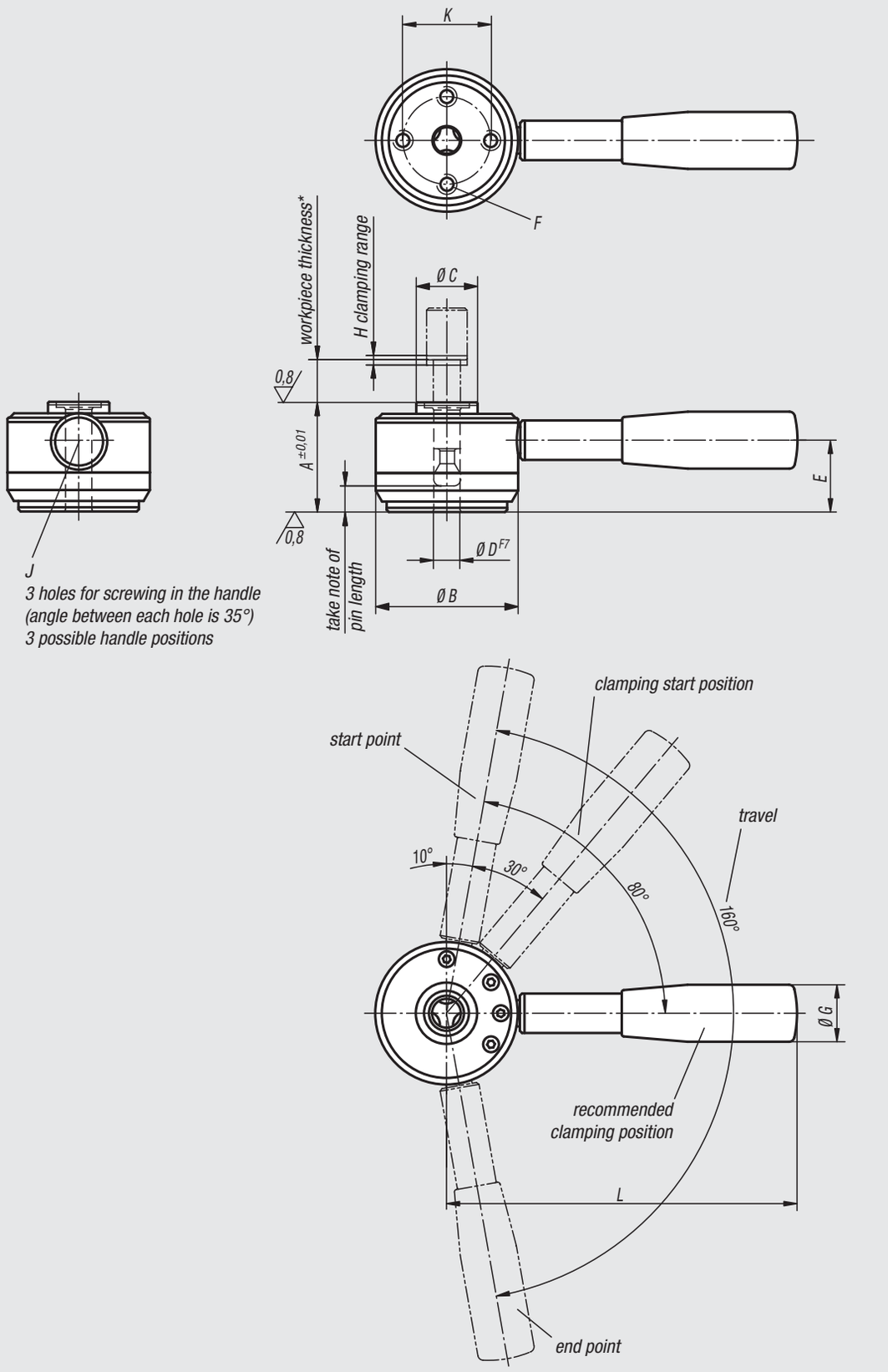

Order No.	A	B	C	D	E	F	G	H	J	K	L	Clamping force N	Recommended workpiece thickness tolerance	Hand force FH N	Holding force N
04400-506501	50	65	28	12	36	M8x14	26	2	10	40	160	6000	±0,5*	600**	8000
04400-638001	63	80	34	16	45	M10x18	28	2,5	12	50	180	8000	±0,8*	600**	14000

Notes

Clamping element “actima”

Material:
Steel.
Housing thermoplastic.
Ball knob Duroplast PF 31.
Accessories steel.

Version:
Black oxidised.
Housing black.
Ball knob, red.
Accessories black oxidised.

Sample order:
nlm 04410-10

Note:
The travel path is 10 mm. Self-locking occurs in any position within only 2 mm of clamp travel. Thus workpieces with tolerances of up to 1.5 mm can be safely clamped. The actima clamping device can be fitted in any horizontal or vertical position.
Standard parts allow further applications. They are available as optional accessories.
All parts of the cam system subject to heavy loads are case-hardened (pressure sleeve and accessories only if specified).
The maximum permissible clamping force is approximately 4905 N.

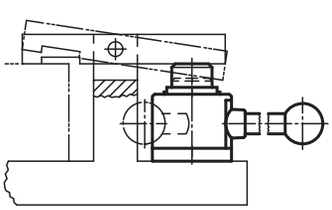

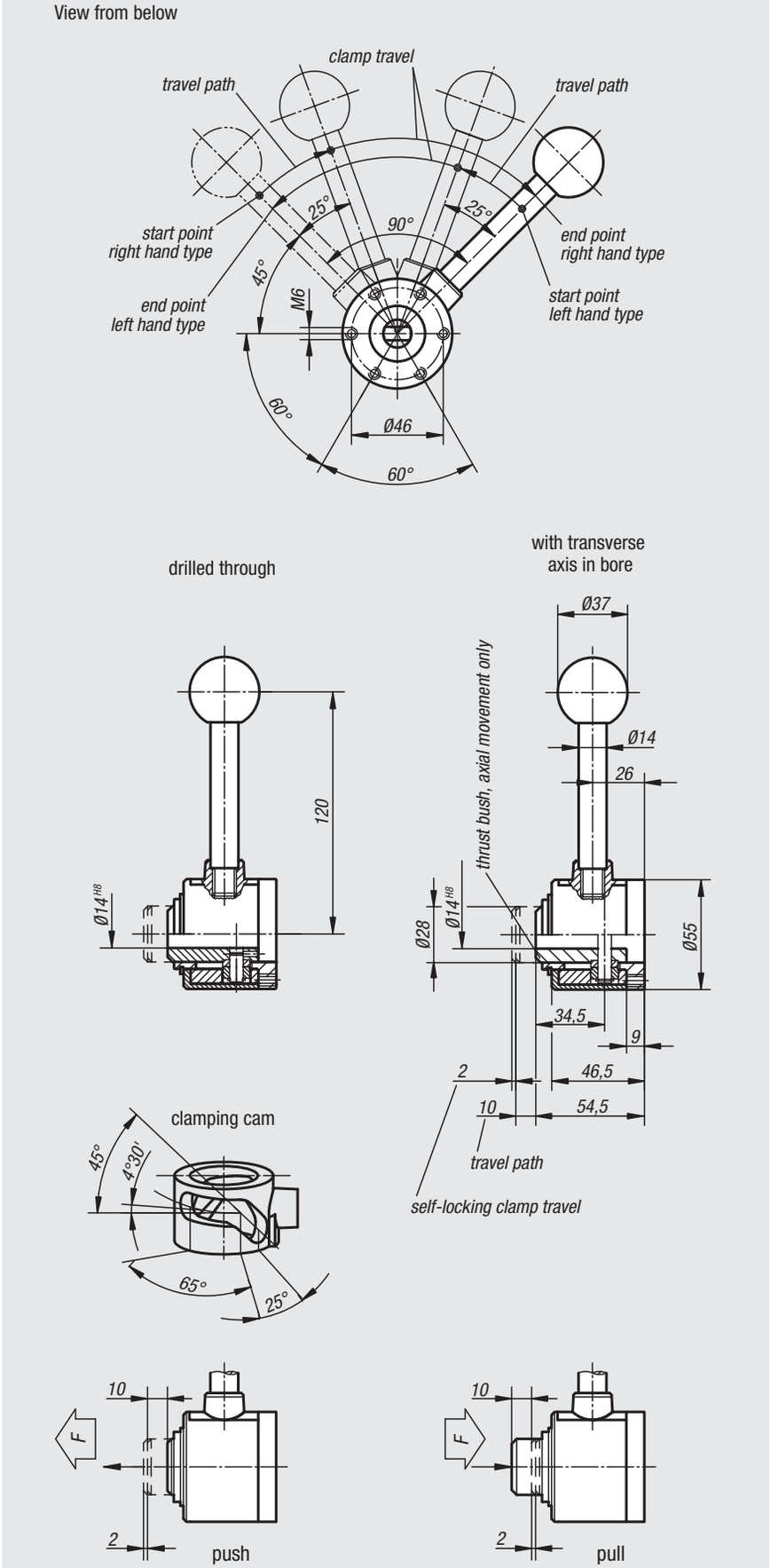

Clamping element “actima”

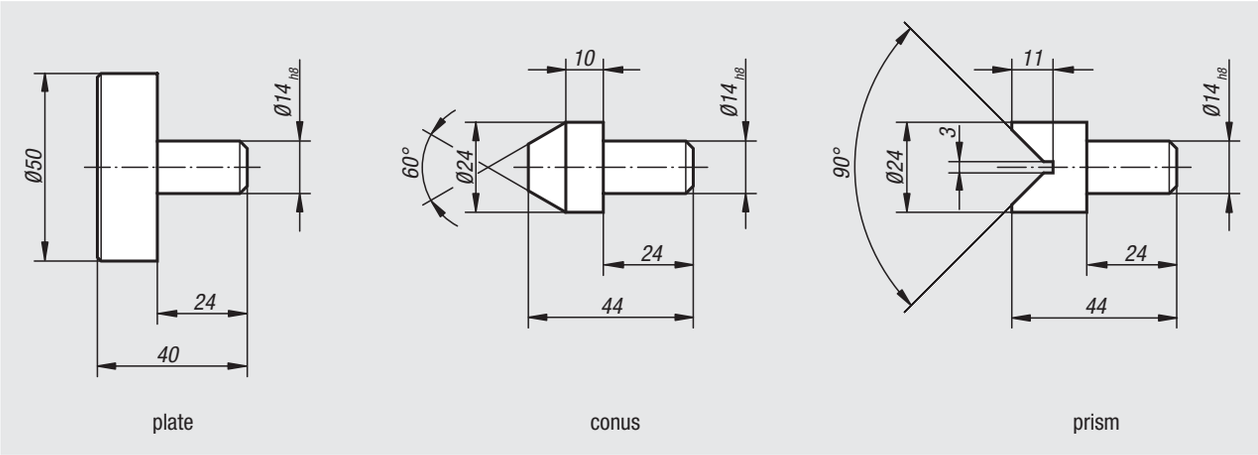

“actima” clamping element with transverse axis in bore

Order No.	Version
04410-10	right-hand / thrust
04410-15	right-hand / pull
04410-20	left-hand / thrust
04410-25	left-hand / pull

“actima” clamping element with drilled through bore

Order No.	Version
04410-30	right-hand / thrust
04410-35	right-hand / pull
04410-40	left-hand / thrust
04410-45	left-hand / pull

“actima” accessories

Order No.	Description
04410-02	Plate
04410-03	Conus
04410-04	Prism

Floating clamp

Material:
Base body and jaws steel.
Housing aluminium.

Version:
Body nitrided, black oxidised and ground.
Jaws nitrided and black oxidised.
Housing red anodized.

Sample order:
nlm 04420-100812

Note:
The floating clamp is used to clamp and support overhanging clamping points on components.
It prevents vibrations and deflection during machining.

Method of operation:
1. Push the floating clamp down.
2. Pivot the jaws to the stop. The floating clamp contacts the bottom of the workpiece with a light spring force.
3. Tighten the floating clamp with the SW 18 hexagon nut (note the min. and max. torque). During clamping the workpiece is clamped and simultaneously supported.
4. Reverse the process to release.

Assembly:
Fasten the floating clamp to the fixture with the M12 screw.
Adjust the height stop and swivel range using the red sleeve and lock with the 3x2.5 mm grub screws. When setting the height leave generous clearance above.
For safe operation the M12 tapped hole must always be closed.
For specific clamping applications the standard jaws can be altered or replaced.

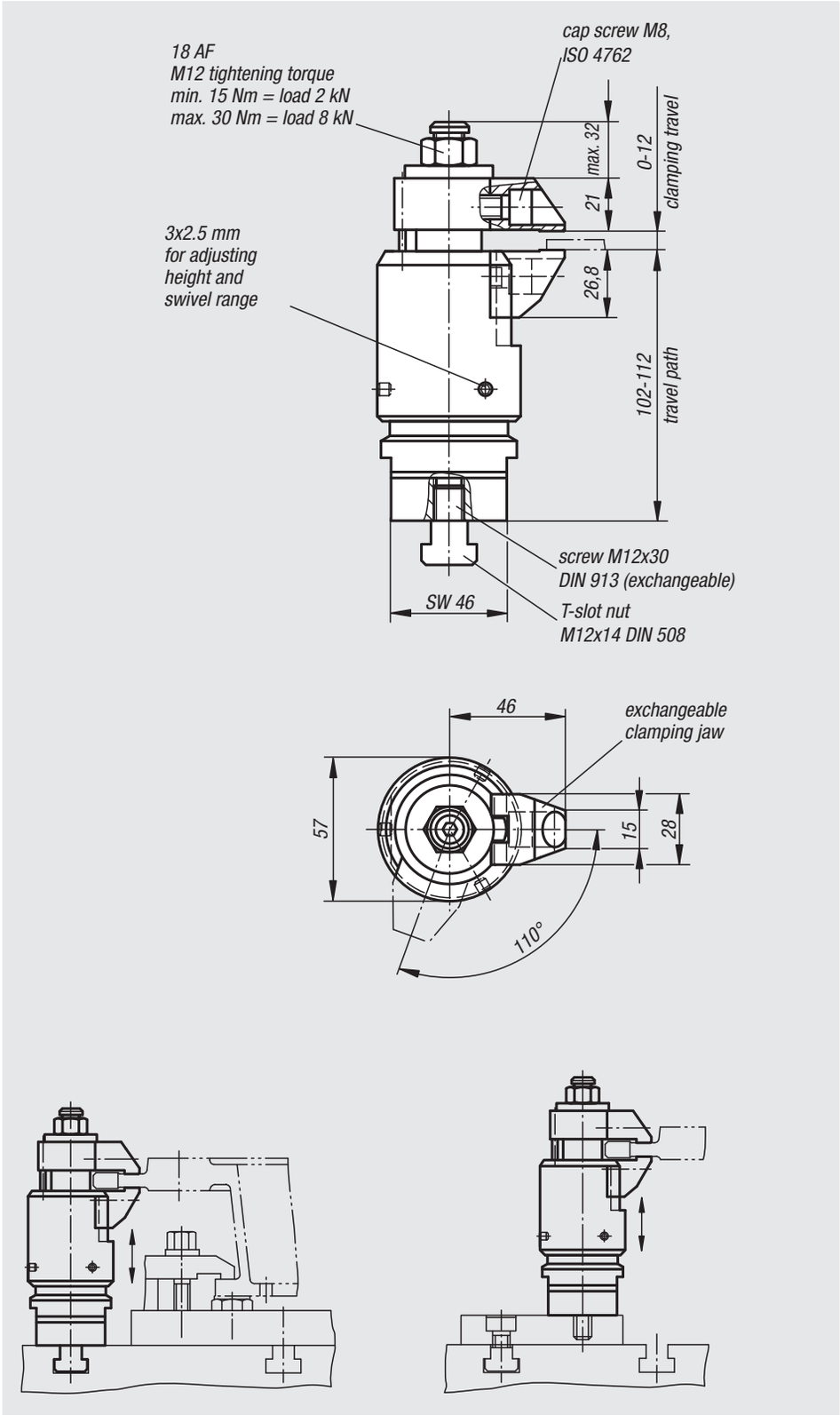

Order No.	Travel path	max. clamping travel	Load capacity N	Clamping force N
04420-100812	10	12	8000	8000

Floating clamp

with separate workpiece clamp and interlock

Material:
Base body and jaws steel.
Housing aluminium.

Version:
Body nitrided, black oxidised and ground.
Jaws nitrided and black oxidised.
Housing blue anodized.

Sample order:
nlm 04421-100812

Note:
This floating clamp is used to clamp and support overhanging clamping points on thin components. It prevents vibrations and deflection during machining.

Method of operation:
1. Push the floating clamp down.
2. Pivot the jaws. The lower jaw contacts the workpiece with a light spring force.
3. Tighten the SW 18 hexagon nut. The jaws clamp the workpiece, the clamp is still floating.
4. Tighten the SW 10 hexagon nut. The clamping process is completed.
5. Reverse the process to release.

Assembly:
Fasten the floating clamp to the fixture with the M12 screw.
Adjust the height stop and the swivel range using the blue sleeve and lock with the 3x2.5 mm grub screws. When setting the height leave generous clearance above.
For safe operation the M12 tapped hole must always be closed.
For specific clamping applications the standard jaws can be altered or replaced.

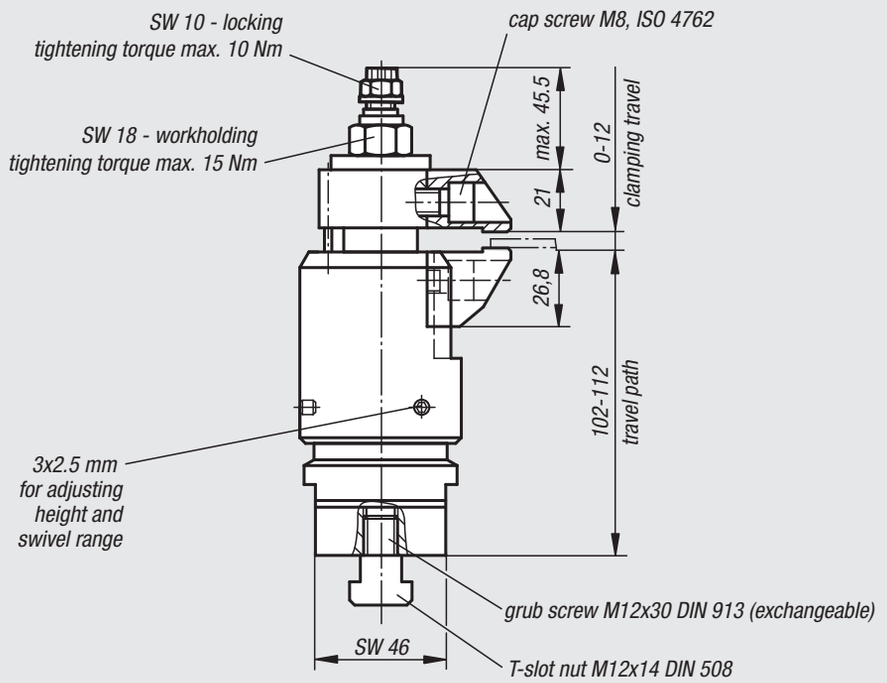

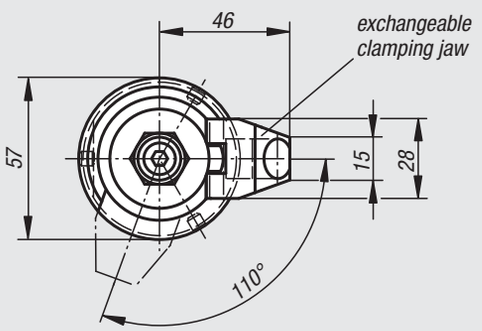

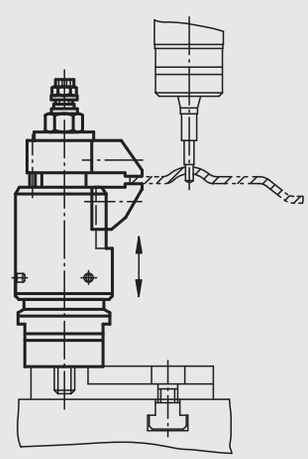

Order No.	Travel path	max. clamping travel	Load capacity N	Clamping force N
04421-100812	10	12	8000	8000

Clamping jaws

for floating clamps

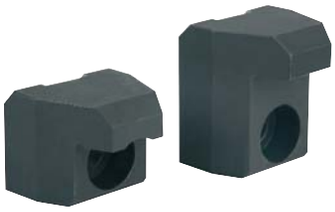

Material:
Steel.

Version:
Nitrided and black oxidised.

Sample order:
nlm 04422-90000

Note:
The clamping jaws can be used for floating clamps to increase the clamping range.

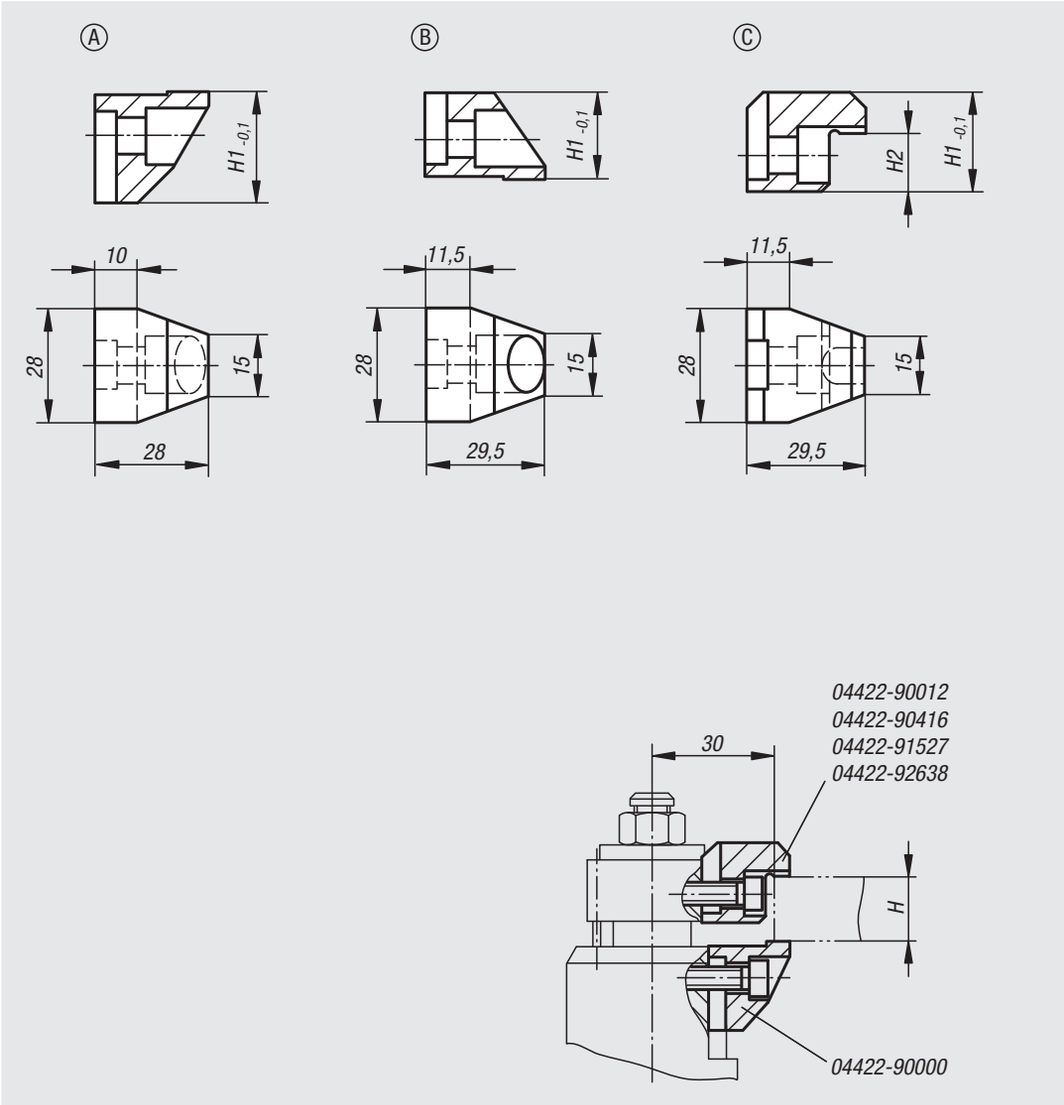

Order No.	Form	Version	H clamping range	H1	H2
04422-90000	A	standard lower jaw	-	26,8	-
04422-90012	B	standard upper jaw	0 - 12	21	-
04422-90416	C	exchange upper jaw	4 - 16	24,5	3,5
04422-91527	C	exchange upper jaw	15 - 27	24,5	14,5
04422-92638	C	exchange upper jaw	26 - 38	35,5	25,5

Notes

Clamping element “arness”

Material:
Steel.
Ball knob Duroplast PF 31

Version:
Housing painted silver-grey hammertone.
All other parts and accessories black oxidised.
Ball knob red.

Sample order:
nlm 04430-01

Note:
The travel path is 12 mm. Self-locking occurs in any position within only 1.5 mm of clamp travel, allowing workpieces with tolerances of up to 1 mm to be securely clamped. The arness clamping element can be fitted in any horizontal or vertical position.
Several standard parts have been developed to achieve individual adaptation for various circumstances and are available as optional accessories.
The thrust pad and all parts of the cam system subject to heavy loads are case-hardened.
The maximum permissible clamping force is approximately 4905 N.

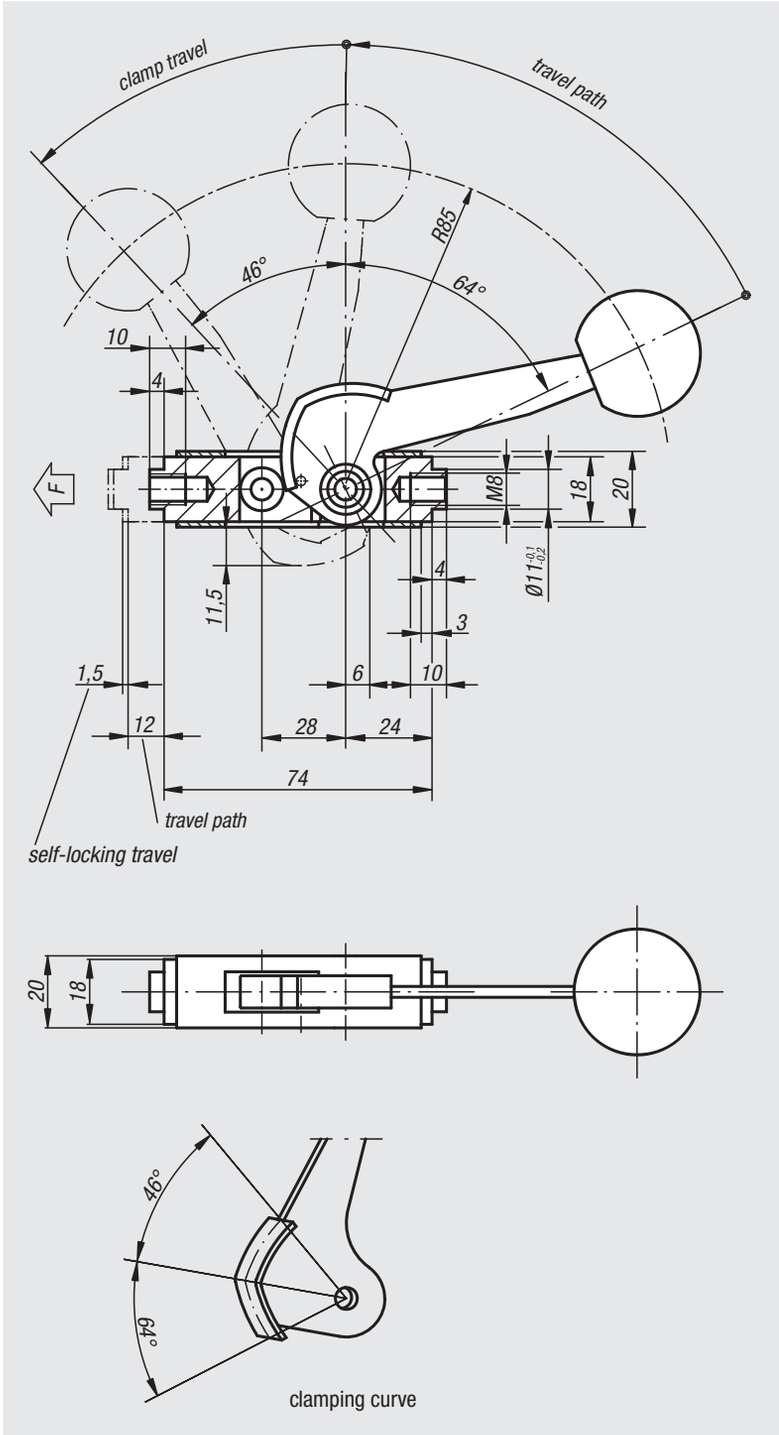

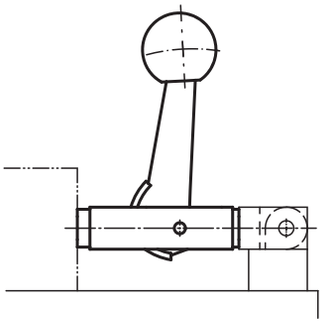

Clamping element “arness”

Order No.	Dimensions
04430-01	see drawing

Clamping element “arness”

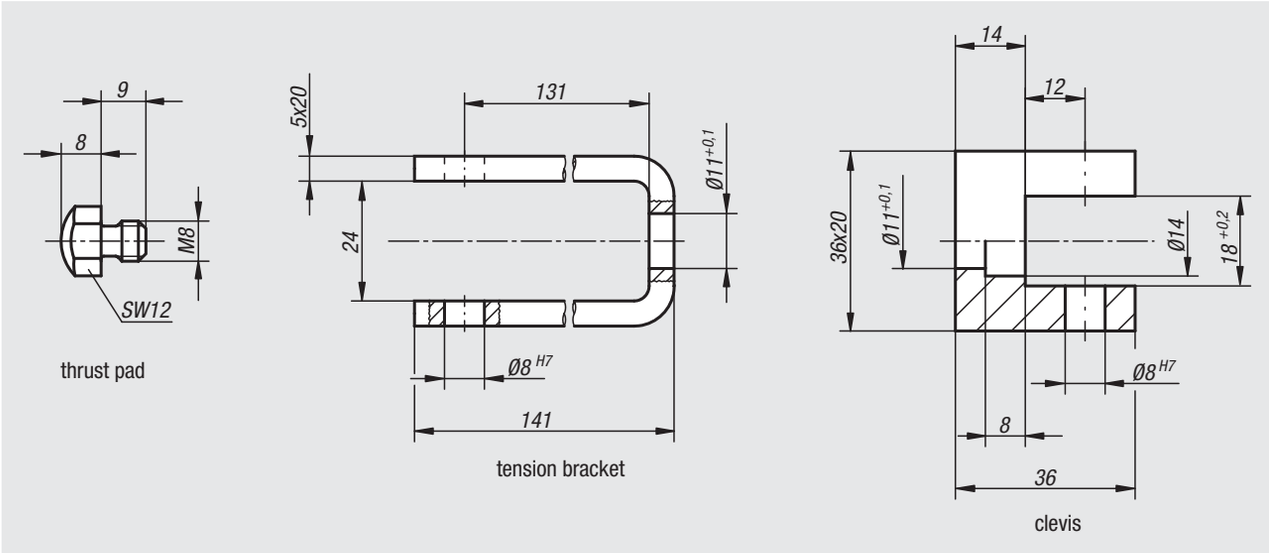

“arness” accessories

Order No.	Description
04430-02	Clevis
04430-03	Tension bracket
04430-04	Thrust pad

04431

Fixture clamps machinable

Material:
Cam screw alloyed steel.
Clamping disc steel.

Version:
Cam screw and clamping disc black oxidised.

Sample order:
nlm 04431-06

Note:
These fixture clamps have a round washer that can be machined to suit the contour of the workpiece being clamped. This allows positive clamping for round, contoured or fragile workpieces. The flat edge is the same distance from the screw centre as our hexagonal fixture clamps 04435 allowing an interchange between the two.
"A" = distance from workpiece to screw centre (cam screw)
"D1 min." = maximum depth of contour.

On request:
Replacement cam screws.

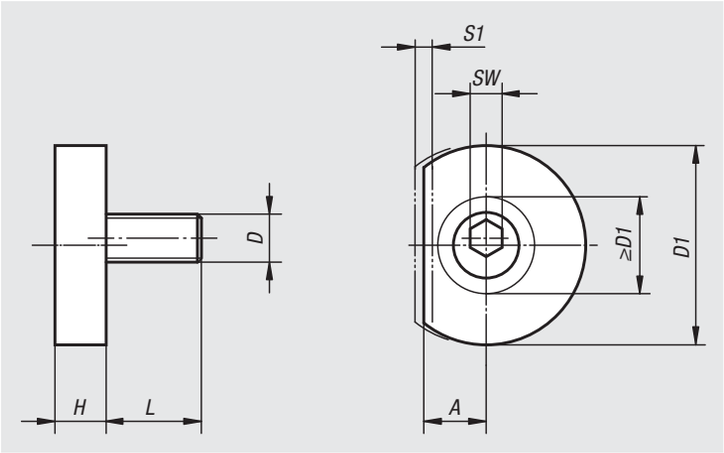

Order No.	A	D	D1	D1 min.	H	L	SW	S1 (travel)	Clamping force kN
04431-06	7,8	M6	24,9	12,1	6,4	11,9	4	1,01	3,3
04431-10	10,2	M10	31,2	17,2	8,9	18	7	1,52	8,9
04431-12	12,7	M12	37,6	22,4	11,4	22,9	8	2,03	17,8
04431-16	15	M16	43,9	26,1	14	28,6	12	2,54	26,7

04432

Fixture clamps unequal hexagon

Material:
Cam screw steel tempered to 10.9.
Hexagon washer mild steel.

Version:
Cam screw black oxidised.
Hexagon washer hardened and black oxidised.

Sample order:
nlm 04432-13

Note:
Theses unequal hexagon fixture clamps can minimise the cost of clamping in fixtures. The clamping range can be altered up to 17 mm from the same tapped hole. Simply rotate the hexagon washer.
The washers are available with smooth edges for machined faces or with serrated edges for rough faces.

On request:
Replacement cam screws.

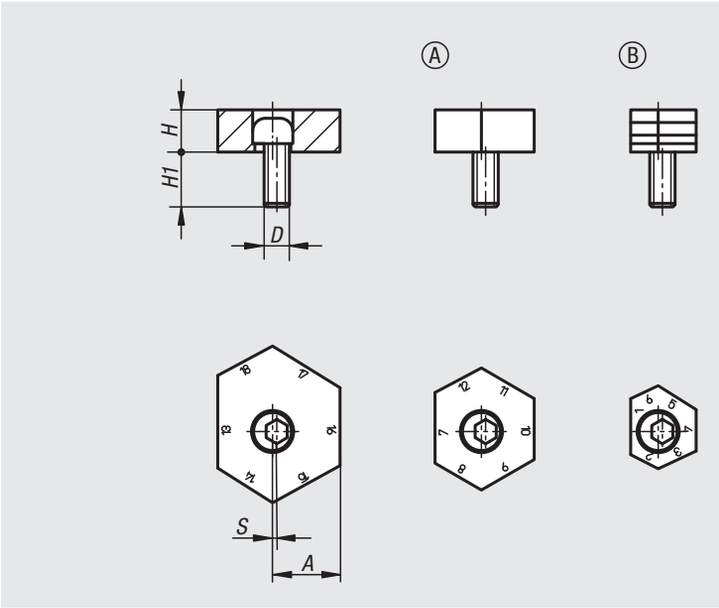

Order No. Form A smooth	Order No. Form B serrated	Distance A by face No.	D	H	H1	S (cam travel)	Clamping force kN
04432-09	**04432-13**	1/12, 2/13, 3/14, 4/15, 5/16, 6/17	M12	10	22	1	18
04432-10	**04432-14**	7/18, 8/19, 9/20, 10/21, 11/22, 12/23	M12	10	22	1	18
04432-11	**04432-15**	13/24, 14/25, 15/26, 16/27, 17/28, 18/29	M12	10	22	1	18

Spiral cam screws

Material:
Steel.

Version:
Case-hardened (56 ±1 HRC) and blue galvanized.
Grade 8.8

Sample order:
nlm 04433-0408

Note:
Robust, compact spiral cam clamping screws that exert a positive down force on diverse workpiece forms.

Assembly:
Drill and tap several holes at a distance X or Z (see diagram). Screw the cam screw into the required height and position with the flat side to the workpiece. Position the workpiece and tighten the cam screw with a hexagon key. Full clamping is achieved with approximately a 1/3 rotation. Lubricate the tapped hole regularly.

Place stops on the face towards which the screw turns to prevent the workpiece rotating away.

On request:
Spiral cam screws with LH thread.

Drawing reference:
1) clamping sheet metal
2) clamping round parts

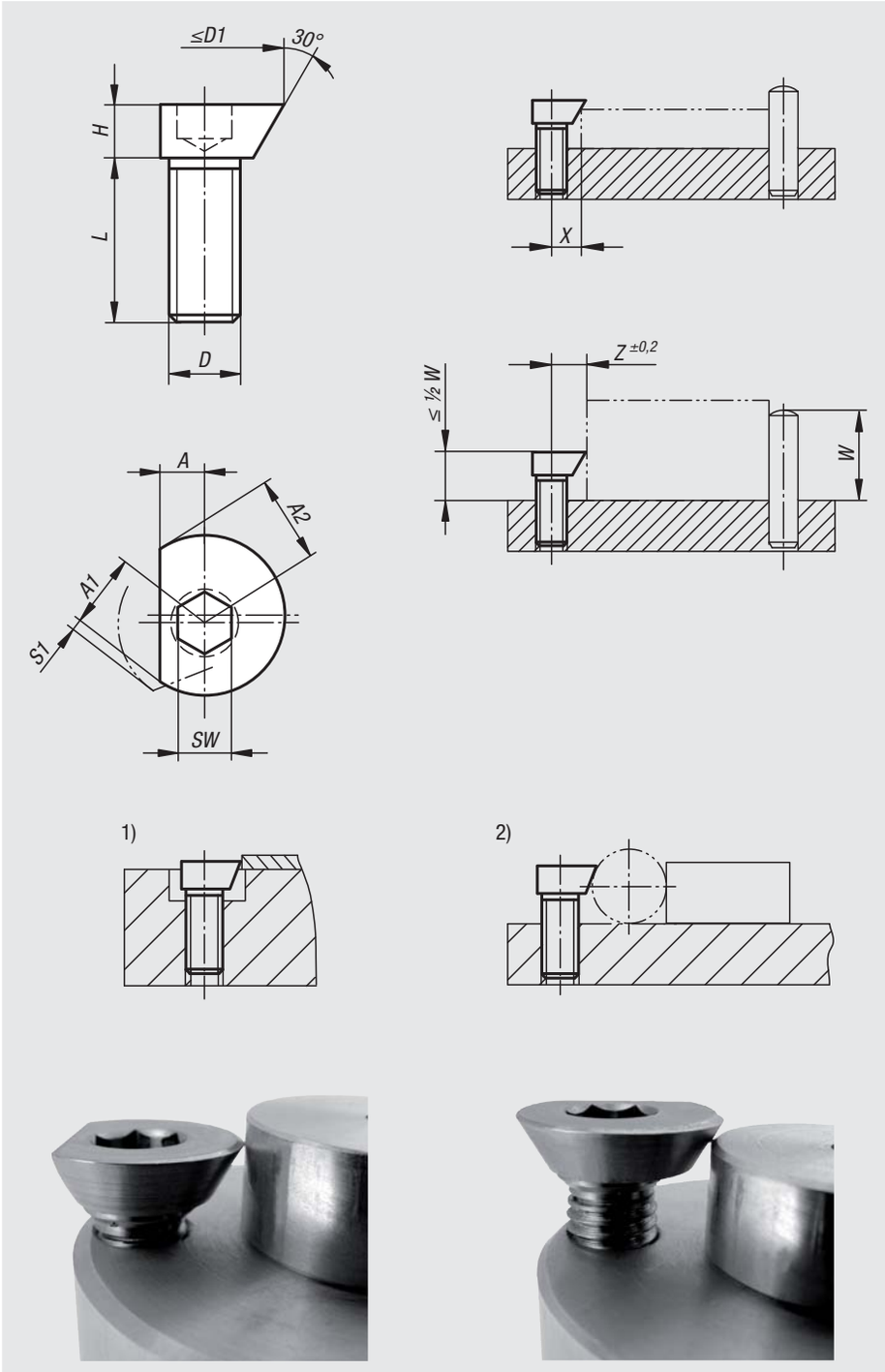

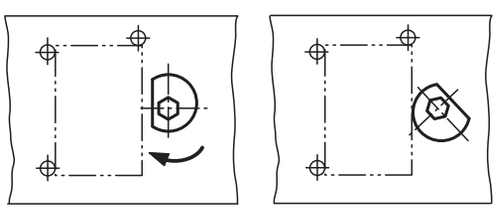

Order No.	A	A1	A2	D	D1 max.	H	L	SW	S1 (travel)	X	Z	Clamping force kN	Tightening torque max. Nm
04433-0408	3	4,6	4	M4	9,2	3	8	2,5	0,6	3,5	4,2	0,09	1,5
04433-0510	3,5	5,7	5	M5	11,4	4	10	3	0,7	4,2	5,2	0,1	2
04433-0612	4,5	7,1	6,1	M6	14,2	5	12	4	1	5,4	6,4	0,3	4,5
04433-0816	5,5	8,9	7,7	M8	18	6	16	5	1,2	6,6	8	2,7	20
04433-1020	6,5	11,1	9,4	M10	22,2	7	20	6	1,7	8,3	9,8	4	30
04433-1224	8	13,5	11,6	M12	27	9	24	8	1,9	10,1	12	5,4	44

04434

Cam screws

with knife edge washer

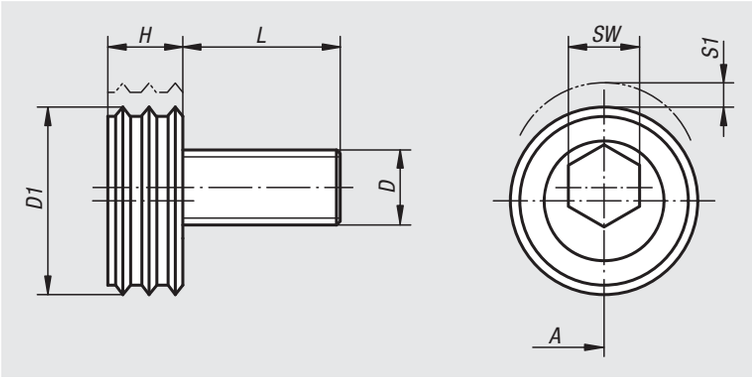

Material:
Knife edge washer.
Cam screw carbon steel.

Version:
Cam screw tempered to 10.9 and black oxidised.
Knife edge washer hardened and anodized.

Sample order:
nlm 04434-16

Note:
Also called knife edge clamps.
The hardened knife edge washer is suitable for clamping rough cut stock, castings, forgings etc.

"A" = distance from workpiece to screw centre (cam screw).

On request:
Replacement cam screws.

Order No.	A	D	D1	L	H	SW	S1 (travel)	Clamping force kN	Tightening torque max. Nm
04434-12	12,7	M12	25,4	22,5	9,6	8	2	18	88
04434-16	15	M16	30,1	26,8	12,7	12	2,5	27	135

04435

Cam screws

with hexagon washer

Material:
Cam screw carbon steel.
Hex washer brass.

Version:
Cam screw tempered to 10.9 and black oxidised.

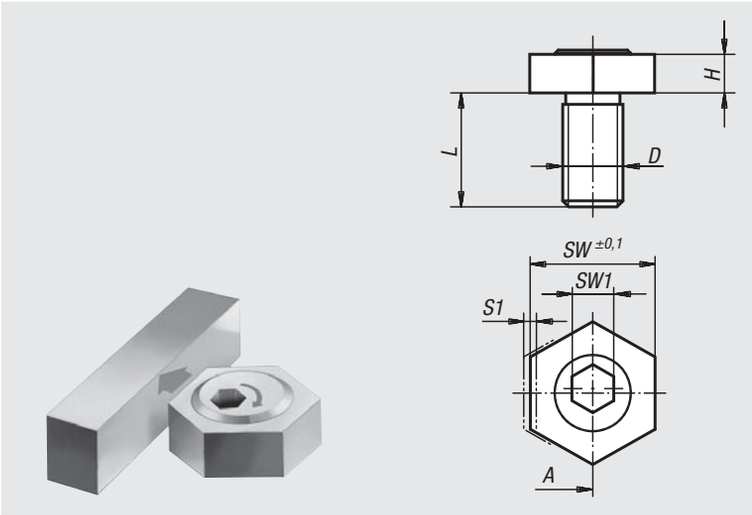

Sample order:
nlm 04435-12

Note:
Also called fixture clamps.
The minimal height of this fixture clamp allows numerous clamping problems in fixture and equipment construction to be solved. The brass hex washer offers a gentle yet extremely stable and safe clamping of workpieces. By using several fixture clamps entire pallets can be set-up.

"A" = distance from workpiece to screw centre (cam screw).

On request:
Replacement cam screws.

Order No.	A	D	H	L	SW	SW1	S1 (travel)	Clamping force kN	Tightening torque max. Nm
04435-04	3,8	M4	2,8	10	8	3	0,8	0,9	2,2
04435-06	7,8	M6	4,8	12	16	4	1	3,4	8,5
04435-08	10,2	M8	4,8	15	20,6	5	1	3,6	11,3
04435-10	10,2	M10	6,4	20	20,6	7	1,6	9,0	28,06
04435-12	12,7	M12	9,5	25	25,4	8	2	18,0	88
04435-16	15	M16	12,7	30	30,2	12	2,5	27,0	135

Cam screws

with hexagon washer, for T-slots

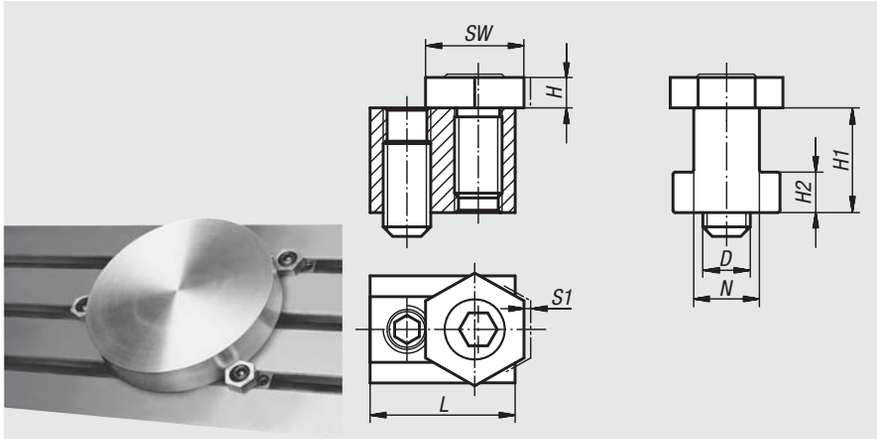

Material:
Carbon steel.
Hex washer brass.

Version:
Tempered to 10.9 and black oxidised.

Sample order:
nlm 04436-12

Note:
Also called fixture clamps for T-slots.
These fixture clamps can be used directly on machine tables or other tables with T-slots. The grub screw at the rear locks the T-nut in the slot. Thin shims are recommended to prevent marking the bottom of the T-slot.

On request:
Replacement cam screws.

Order No.	D	N	H	H1	H2	L	SW	S1 (travel)	Clamping force kN
04436-08	M6	8	4,8	9,6	4,5	23	16	1	3,4
04436-10	M6	10	4,8	14	4,5	23	16	1	3,4
04436-12	M8	12	4,8	15,5	6,5	28	21	1	3,6
04436-14	M10	14	6,4	22	8,5	30,5	21	1,6	9
04436-16	M12	16	9,5	22,5	9	30,5	25	2	18
04436-18	M12	18	9,5	28,5	10	34,5	25	2	18
04436-20	M16	20	12,7	32	12	39	30	2,5	27
04436-22	M16	22	12,7	38,2	14	44	30	2,5	27

Typical setup using fixture clamps

04437

Cam clamps

with riser

Material:
Steel.

Version:
Body tempered and black oxidised.
Square washer case hardened and brass-plated.

Sample order:
nlm 04437-16

Note:
Also called riser clamps.
These cam clamps with riser can be used directly on machine tables. A positive down force is exerted during clamping.

On request:
Replacement cam screws.

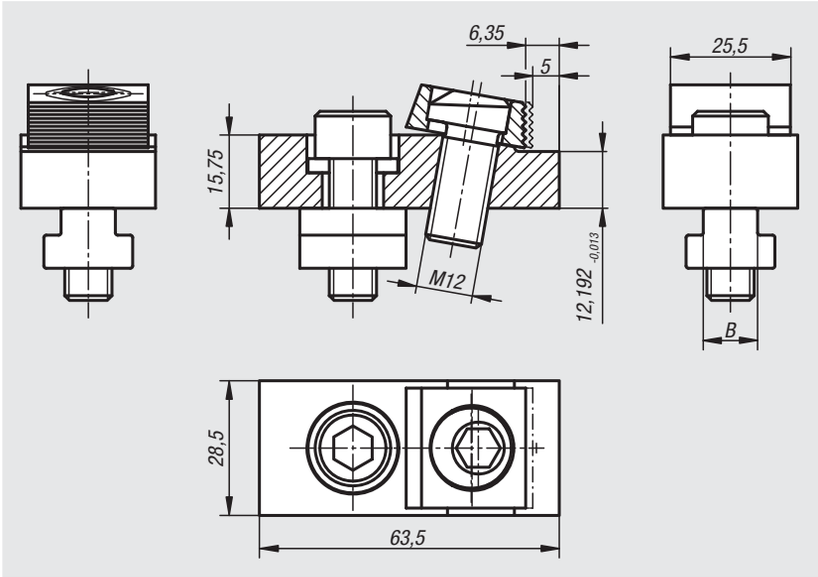

Order No.	B Slot width	Clamping force kN
04437-12	12	12
04437-14	14	12
04437-16	16	12
04437-18	18	12

04439

Toe clamps for T-slots

Material:
Steel.

Version:
Body tempered and black oxidised.
Square washer case hardened and brass-plated.

Sample order:
nlm 04439-14

Note:
These toe clamps can be used on machine tables or adapter plates. The positive down force holds the workpiece down on the supporting surface. The square washer can adapt slightly to an angular position i.e. the workpiece does not have to be exactly parallel. The clamping washer has a smooth side for machined surfaces and a serrated side for rough faces.

On request:
Replacement cam screws.

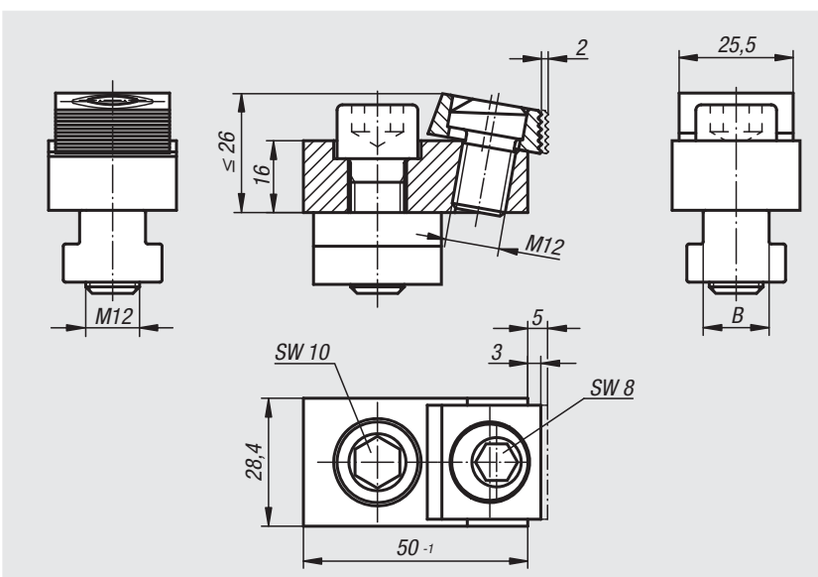

Order No.	B Slot width	Clamping force kN
04439-00	without T-nut and screw	18
04439-14	14	18
04439-16	16	18
04439-18	18	18

Talon grips

Material:
Steel.

Version:
Hardened (52+2 HRC) and black oxidised.

Sample order:
nlm 04440-1219

Note:
Talon grips are meant for installing into vice jaw plates. A slot with tapped hole is sufficient for mounting. The sharp edges on the talons bite into the workpiece and prevent lateral and horizontal movement.

- Positive clamping for high cutting speeds.
- Low clamping height of 1.5 mm (saves material costs).
- The contour of the talons produces a slight pull-down effect.

A matching stop is available as an accessory.

Drawing reference:
1) workpiece
2) clamping jaw

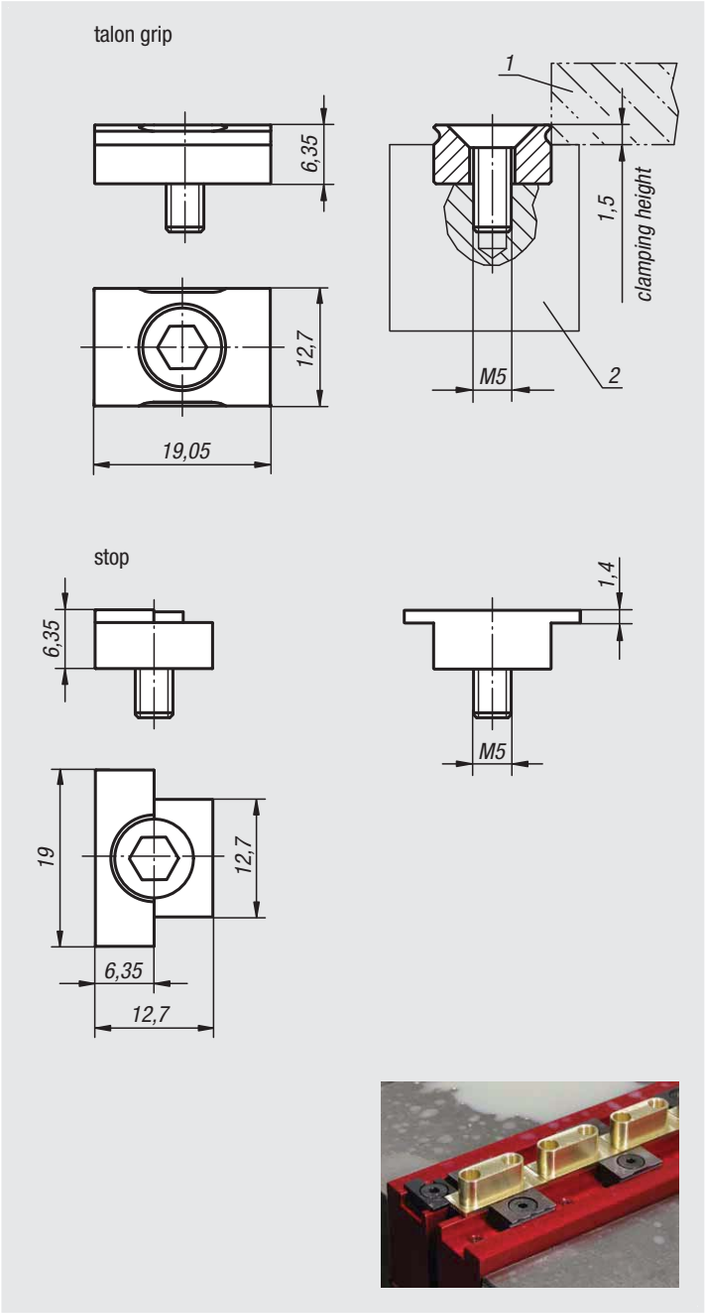

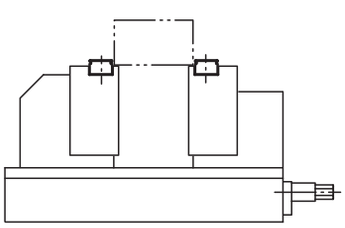

Order No.	Version
04440-1219	talon grip
04440-12	stop

Talon grips round

Material:
Steel.

Version:
Hardened (52+2 HRC) and black oxidised.

Sample order:
nlm 04440-0919

Note:
Talon grips are meant for installing into vice jaw plates. A tapped hole with counterbore is sufficient for the mounting. The sharp edges on the talons bite into the workpiece and prevent lateral and horizontal movement.

- Positive clamping for high cutting speeds.
- Low clamping height of 1.5 mm (saves material costs).
- The contour of the talons produces a slight pull-down effect.

Talon grips expand the application possibilities of your machine vice. Round, contoured and oversized workpieces can be quickly and securely clamped by using talon grips.

Drawing reference:
1) workpiece
2) clamping jaw

talon grip

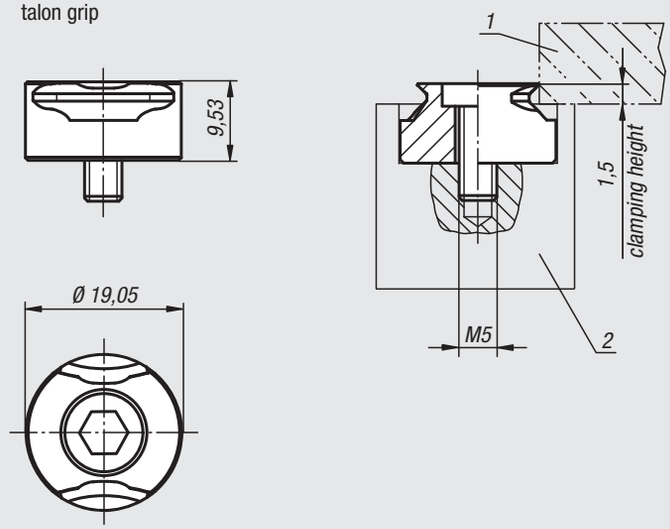

special components

round components

Order No.	Version
04440-0919	talon grip

Chock clamps

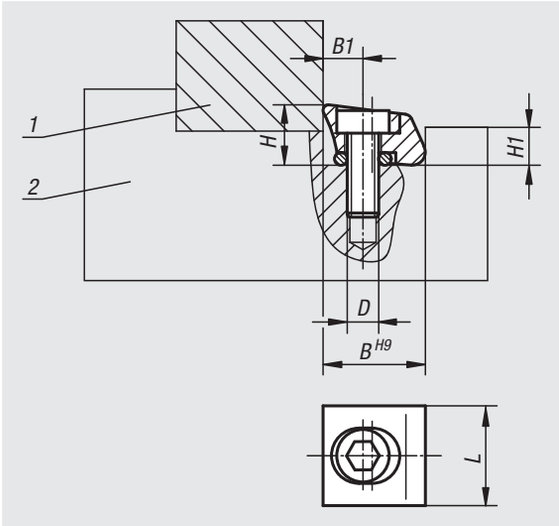

Material:
Clamping element steel or brass.

Version:
Steel hardened.

Sample order:
nlm 04441-113

Note:
Also known as pitbull clamps.
Extremely space-saving design.
No protruding edges due to lateral clamping.
Positive down force.

Drawing reference:
1) workpiece
2) Fixture

Order No.	Version	Main material	D	B	B1	H	H1	L	Clamping travel	Clamping force kN	Tightening torque max. Nm
04441-110	with knife edge	steel	M2,5 x 8	9,5	3,8	6	3,6	9,5	0,15	2,8	1,8
04441-113	with knife edge	steel	M4 x 12	12,7	5,1	8	4,8	13	0,4	6,6	5,6
04441-119	with knife edge	steel	M6 x 16	19,05	7,6	11,5	7,2	19	0,6	16	22,5
04441-210	with blunt edge	steel	M2,5 x 8	9,5	3,8	6	3,6	9,5	0,15	2,8	1,8
04441-213	with blunt edge	steel	M4 x 12	12,7	5,1	8	4,8	13	0,4	6,6	5,6
04441-219	with blunt edge	steel	M6 x 16	19,05	7,6	11,5	7,2	19	0,6	16	22,5
04441-310	with blunt edge	brass	M2,5 x 8	9,5	3,8	6	3,6	9,5	0,15	0,9	0,56
04441-313	with blunt edge	brass	M4 x 12	12,7	5,1	8	4,8	13	0,4	1,8	2,8
04441-319	with blunt edge	brass	M6 x 16	19,05	7,6	11,5	7,2	19	0,6	4,2	5,6

Cam clamps adjustable

with riser

Material:
Steel.

Version:
Body tempered, black oxidised, riser faces ground.
Square washer case hardened and brass-plated.

Sample order:
nlm 04444-12

Note:
Also called multi-fixture clamps and stops.
Cost-effective custom made clamping fixtures can be produced using the adjustable riser cam clamps together with the matching riser stops.

On request:
Replacement cam screws.

04444-08, 04444-12

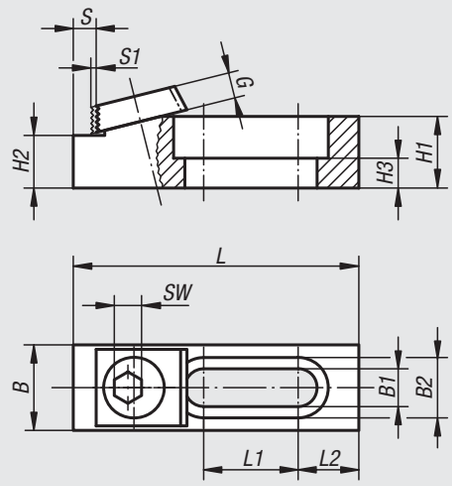

04444-16

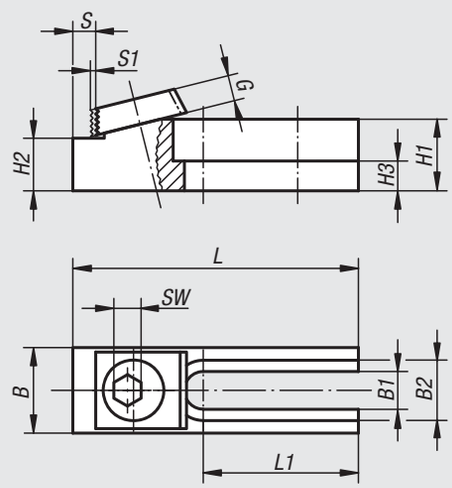

Order No.	suitable fastening screw	L	L1	L2	B	B1	B2	H1	H2	H3	S	S1	G	SW	Long hole	Clamping force kN	Tightening torque max. Nm
04444-08	M8	63,5	21	13,5	19	8,4	13,4	15,9	11,684 -0,013	6,6	6,3	1,2	5,3	7	closed	8,9	28
04444-12	M12	95,1	42,7	12,7	28,5	13	19,8	15,9	12,192 -0,013	6,9	7,1	2	9,5	8	closed	17,8	88
04444-16	M16	107	46,3	-	38	17	24,8	41	35,001 -0,013	21	8,3	2,5	12,7	12	open	26,7	135

Riser stops

Material:
Steel.

Version:
Tempered, black oxidised.
Riser faces ground.

Sample order:
nlm 04445-12

Note:
Also called multi-fixture clamps and stops.
Cost-effective custom made clamping fixtures can be produced using the adjustable riser cam clamps together with the matching riser stops.

04445-08, 04445-12

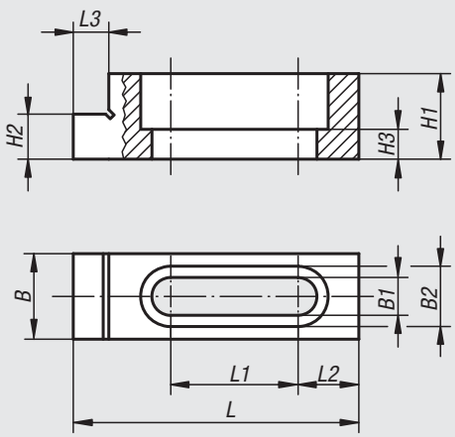

04445-16

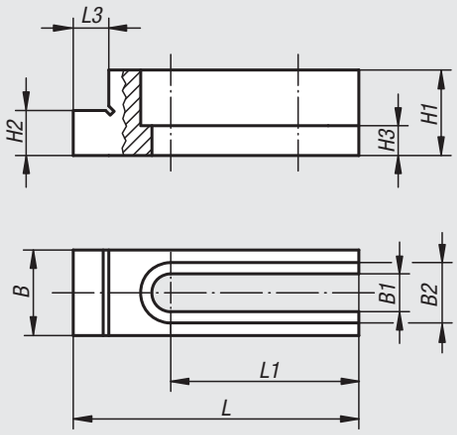

Order No.	suitable fastening screw	L	L1	L2	L3	B	B1	B2	H1	H2	H3	Long hole
04445-08	M8	63,5	28,3	13,5	7,9	19	8,4	13,4	19	11,684 -0,013	6,6	closed
04445-12	M12	95,2	42,7	12,7	7,9	28,5	13,4	19,8	22	12,192 -0,013	6,9	closed
04445-16	M16	107	46,2	-	9,5	38	17	24,8	50,7	35,001 -0,013	21,3	open

04450

Low-profile clamps

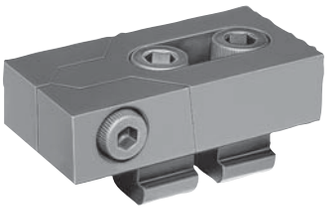

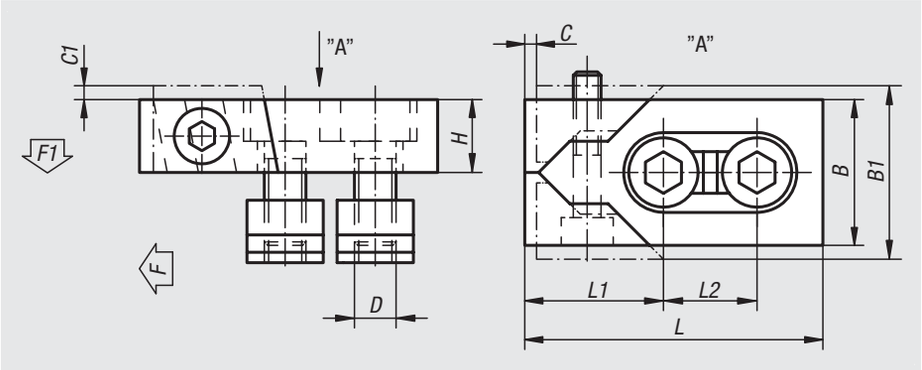

Material:
Steel.

Version:
Hardened, black oxidised.

Sample order:
nlm 04450-16

Note:
These handy low-profile clamp jaws are ideal for machining most workpiece sizes. The hardened wedge operated jaws also provide positive down force.

Order No.	Slot width	L	L1	L2	B	B1	H	C	C1	D	F kN	F1 kN	Tightening torque max. Nm
04450-12	12	80	39	26	40	47	20	3	2,5	M10	16	0,6	15
04450-14	14	80	39	26	40	47	20	3	2,5	M12	22	0,9	18
04450-16	16	80	39	26	40	47	20	3	3	M12	22	0,9	18
04450-161	16	100	46	34	50	59	25	4	2,5	M14	32	1,2	25
04450-18	18	100	46	34	50	60	25	4	3	M16	36	1,4	35
04450-20	20	100	46	34	50	60	25	4	3	M16	36	1,4	35
04450-22	22	140	65	50	78	95	30	5	4	M20	36	1,4	45

04470

T-slot clamps

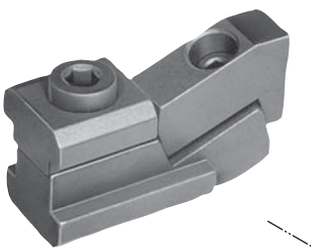

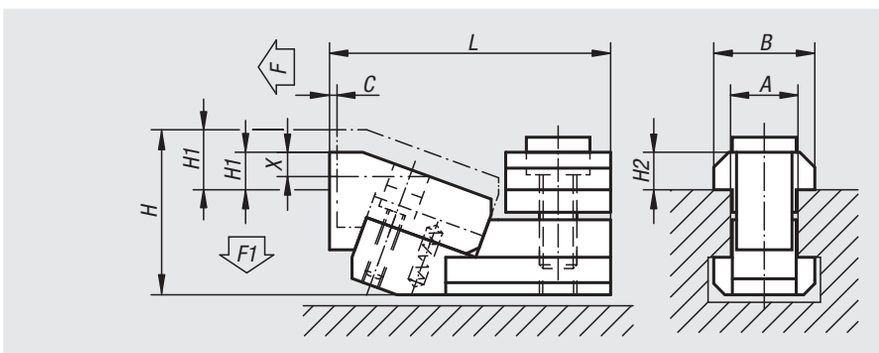

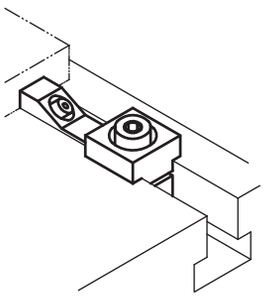

Material:
Steel.

Version:
Hardened, black oxidised.

Sample order:
nlm 04470-12

Note:
These T-slot clamps are especially useful for clamping low profile workpieces. The wedge operated jaws also provide positive down force.
Dimensions "H1" and "X" depend on the max. T-slot depth acc. to DIN 650.
To achieve the minimal clamping height by the minimal slot depth, the jaw can be ground down by the dimension "X".

Order No.	A	C	L max.	B	H	H1 min.	H1 max.	X	H2	F N	F1 N
04470-12	12	1,8	52	18	31	3,5	8,5	5	7	5000	600
04470-14	14	1,8	55	22	34	2,5	7,5	5	8	5500	700
04470-16	16	2,5	68	25	41	4	11	6	9	8000	900
04470-18	18	2,5	71	28	43	2	9	6	10	9000	1000
04470-22	22	3	89	35	53	5	14	9	14	16000	1900

Side clamps

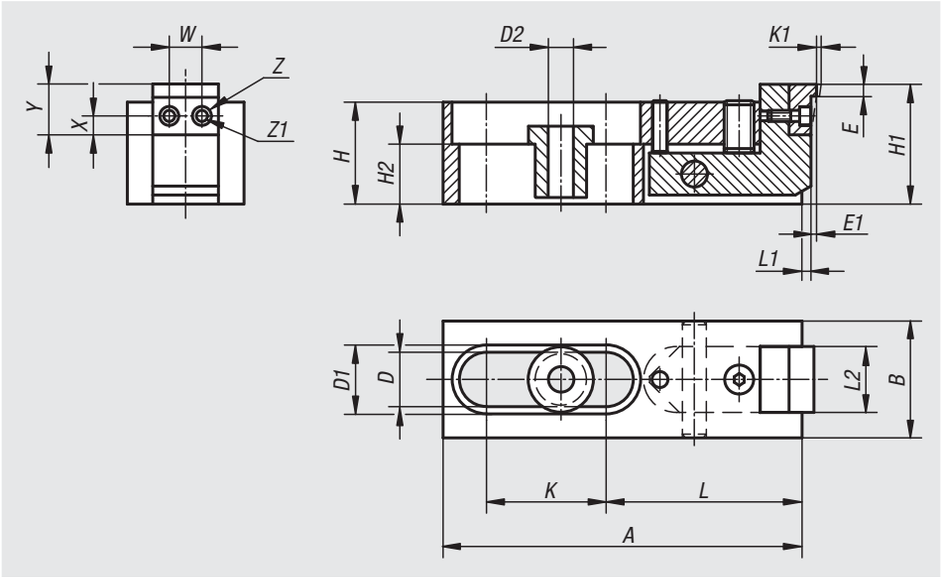

Material:
Body steel.
Jaw mild steel.
Centring bush with collar carbon steel.

Version:
Black oxidised.
Jaws case-hardened.

Sample order:
nlm 04480-006

Note:
These flat design side clamps are ideal for machining low profile workpieces. The hardened jaws also provide positive down force.

Order No.	A	B	D	D1	D2	E	E1	H	H1	H2	K	K1	L	L1	L2	W	X	Y	Z	Z1	Clamping force kN
04480-006	80	24	12,2	16	6,5	2,5	0,6	21	25,5	9	25,5	2	44,5	2,5	13,5	7	4,5	11	5	3	3
04480-010	120	39	18,2	24	10,5	4	1	34	40	20	40,5	2,5	65,5	4	21,5	10	6	15	8	4,5	16
04480-016	186	60	26,2	35	17	7	1,5	51	59	22	60,5	4	105	6,5	35,5	16	9	24	14	9	31

Side clamps

with rest pad

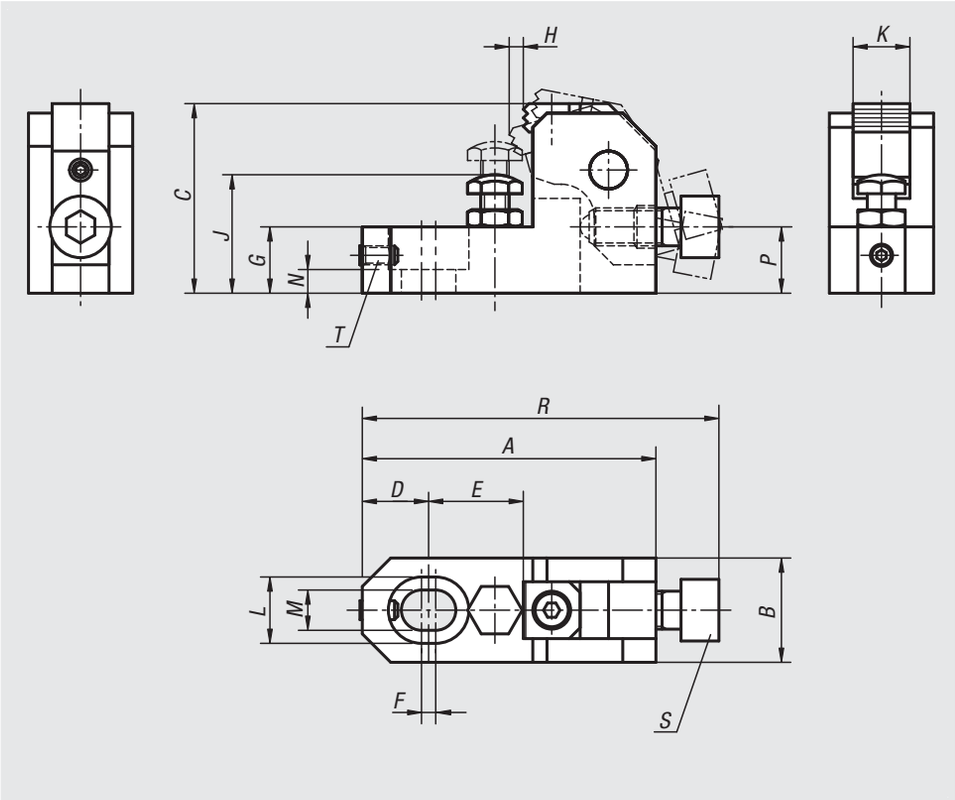

Material:
Housing and arm carbon steel.
Jaw tool steel.

Version:
Housing tempered and black oxidised.
Arm black oxidised.
Jaw tempered and black oxidised.

Sample order:
nlm 04485-02508

Drawing reference:
T) grub screw
S) ball pressure screw

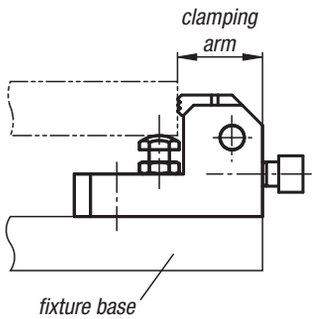

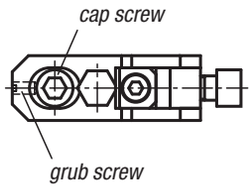

Order No.	A	B	C	D	E	F	G	H	J	K	L	M	N	P	R	S	T	Clamping force N	Tightening torque Nm
04485-02508	62	22	40	14	20	3	14	3	25-32	12	14	8,5	5	14	75,5	M8x20	M4x8	6000	15
04485-03210	78	25	50	18	25	4	18	3,7	32-40	16	17,5	11	7	17,5	95	M10x25	M5x10	10000	30
04485-04012	93	32	60	21	30	5	21	4,5	40-48	20	20	13	8	21	113	M12x30	M6x12	17000	65
04485-04816	124	38	80	28	40	6	27	6	48-63	25	26	17	10	28	151	M16x40	M8x16	25000	130

04500

Side clamps robust

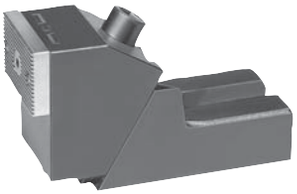

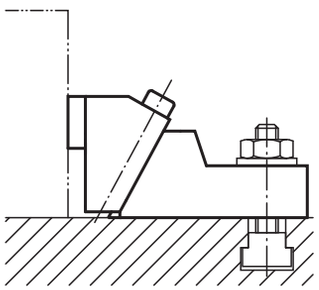

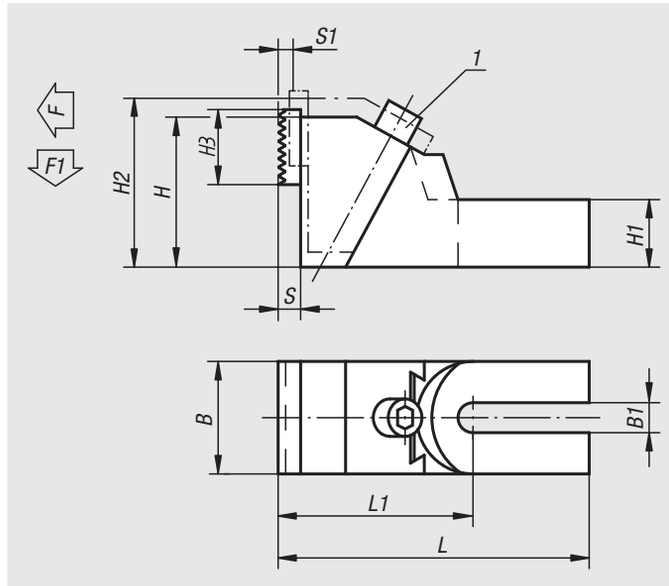

Material:
Body malleable iron.
Jaws mild steel.

Version:
Black oxidised.
Jaws case-hardened.

Sample order:
nlm 04500-26

Note:
The jaws are reversible, smooth side for machined parts, serrated side for rough surfaces. We recommend using two bolts to mount the clamp to the machine table! The T-slot bolts 07040 can be used for mounting (order separately).

Drawing reference:
1) tightening torque max. 50 Nm

Order No.	suitable for slot width	L	L1	B	B1	H	H1	H2	H3	S	S1	F kN	F1 kN
04500-19	12, 14, 16, 18	177,5	112,5	65	19	85	37	99	40	12	8	18,8	2,26
04500-26	20, 22, 24, 28, 30	226,5	136,5	75	26	100	45	118	40	12	11	23,05	2,77
04500-38	32, 36, 42	262,5	157,5	90	38	120	55	145	40	12	15	29,4	3,33

04509

Side clamps

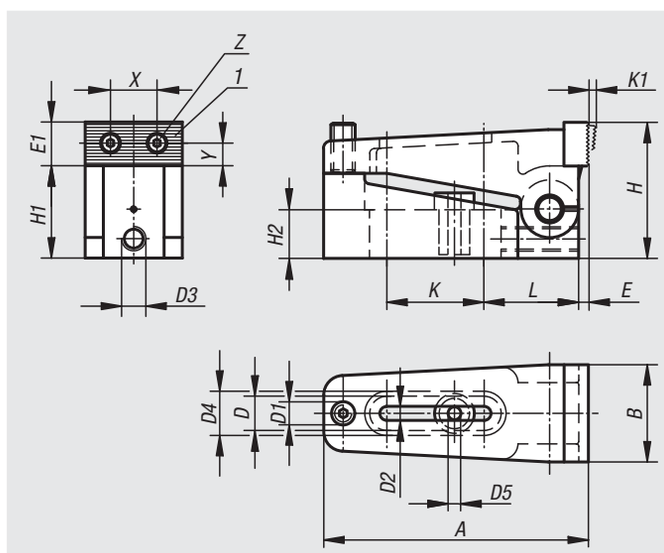

Material:
Body steel.
Jaw mild steel.
Centring bush carbon steel

Version:
Black oxidised.
Jaws case-hardened.

Sample order:
nlm 04509-006

Note:
The jaws are reversible - smooth side for machined surfaces, serrated side for rough surfaces. A positive down force is also exerted during clamping.

Drawing reference:
1) reversible jaw

Order No.	A	B	D	D1	D2	D3	D4	D5	E	E1	H	H1	H2	K	K1	L	X	Y	Z	Clamping force kN
04509-006	73	25	12,2	M6	7	M6	16	6,5	2,5	11	35	24	12,4	25,5	2,5	27	12	4,5	M3	10
04509-010	110	39	18,2	M10	11	M10	24	10,5	4	18	56	38	20	40,5	4	39	20,5	8	M5	40
04509-016	170	58	26,2	M16	17	M10	35	17	7	27	85	60	30	60,5	7	61	32	13	M8	100

Seating blocks adjustable

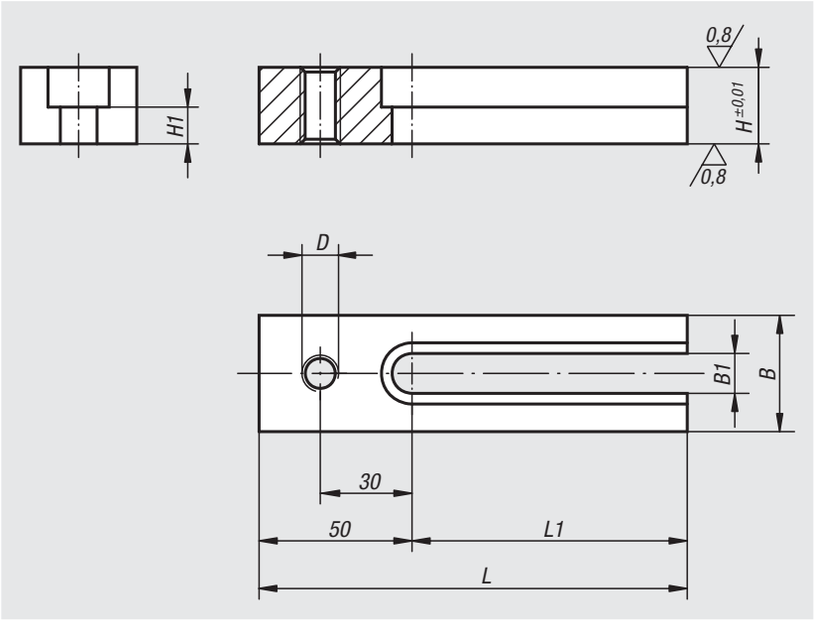

Material:
Carbon steel.

Version:
Tempered, black oxidised.
Contact faces ground.

Sample order:
nlm 04512-12125

Note:
The tapped hole is for mounting fixture components.
The slot allows the riser to be set in any desired position.

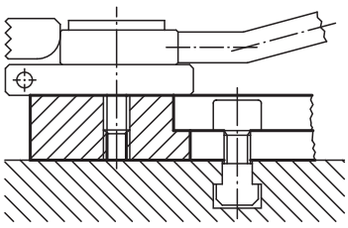

Order No.	D	L	L1	B	B1	H	H1
04512-12025	M12	90	40	38	13	25	12
04512-12032	M12	90	40	38	13	32	19
04512-12040	M12	90	40	38	13	40	27
04512-12050	M12	90	40	38	13	50	37
04512-12125	M12	140	90	38	13	25	12
04512-12132	M12	140	90	38	13	32	19
04512-12140	M12	140	90	38	13	40	27
04512-12150	M12	140	90	38	13	50	37
04512-16032	M16	90	40	50	17	32	15
04512-16040	M16	90	40	50	17	40	23
04512-16050	M16	90	40	50	17	50	33
04512-16132	M16	140	90	50	17	32	15
04512-16140	M16	140	90	50	17	40	23
04512-16150	M16	140	90	50	17	50	33

Side clamps

Material:
Steel.

Version:
Case-hardened and black oxidised.

Sample order:
nlm 04516-006010

Note:
This is a quick-action side clamp where workpieces are clamped by rotating a cam wheel which exerts pressure on the swivel jaw, simultaneously producing a positive down force. Using the stop screw and centring bush (see diagram), the side clamp can be mounted and positioned on a modular grid system.

The versions 04516-006010, 04516-006015, 04516-006030 and 04516-006035 have 2 round carbide inserts.

Clamping force:
04516-006... = 3800 N
04516-010... = 7200 N

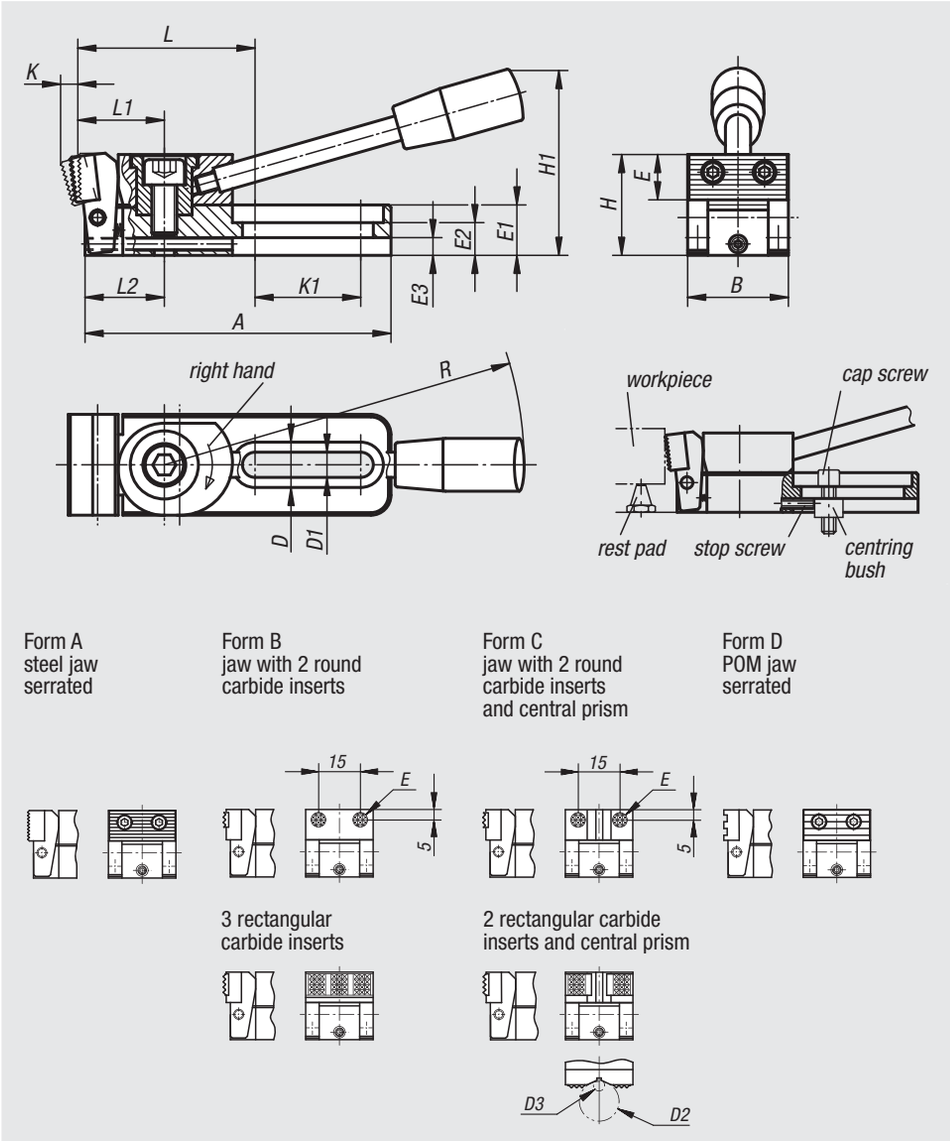

Order No.	Form	Version	A	B	D	D1	D2 max.	D3 min.	E	E1	E2	E3	H	H1	K	K1	L	L1	L2	R	Clamping force kN
04516-006005	A	right	78	25	12	6,2	-	-	11	12	8	4	25	45	4	26	46,5	22	20	110	3,8
04516-010005	A	right	121,5	40	18	10,2	-	-	18	20	13	7	40	74	6	42	71	35	31,5	143	7,2
04516-006025	A	left	78	25	12	6,2	-	-	11	12	8	4	25	45	4	26	46,5	22	20	110	3,8
04516-010025	A	left	121,5	40	18	10,2	-	-	18	20	13	7	40	74	6	42	71	35	31,5	143	7,2
04516-006010	B	right	78	25	12	6,2	-	-	ø 8	12	8	4	24	45	3,5	26	46,5	22	20	110	3,8
04516-010010	B	right	121,5	40	18	10,2	-	-	12,7	20	13	7	39	74	5,5	42	73	35	31,5	143	7,2
04516-006030	B	left	78	25	12	6,2	-	-	ø 8	12	8	4	24	45	3,5	26	46,5	22	20	110	3,8
04516-010030	B	left	121,5	40	18	10,2	-	-	12,7	20	13	7	39	74	5,5	42	73	35	31,5	143	7,2
04516-006015	C	right	78	25	12	6,2	9,5	2,5	ø 8	12	8	4	24	45	3,5	26	46,5	22	20	110	3,8
04516-010015	C	right	121,5	40	18	10,2	27	4,5	12,7	20	13	7	39	74	5,5	42	73	35	31,5	143	7,2
04516-006035	C	left	78	25	12	6,2	9,5	2,5	ø 8	12	8	4	24	45	3,5	26	46,5	22	20	110	3,8
04516-010035	C	left	121,5	40	18	10,2	27	4,5	12,7	20	13	7	39	74	5,5	42	73	35	31,5	143	7,2
04516-006020	D	right	78	25	12	6,2	-	-	11	12	8	4	25	45	4	26	46,5	22	20	110	3,8
04516-010020	D	right	121,5	40	18	10,2	-	-	18	20	13	7	40	74	6	42	70,5	35	31,5	143	7,2
04516-006040	D	left	78	25	12	6,2	-	-	11	12	8	4	25	45	4	26	46,5	22	20	110	3,8
04516-010040	D	left	121,5	40	18	10,2	-	-	18	20	13	7	40	74	6	42	70,5	35	31,5	143	7,2

Side clamps

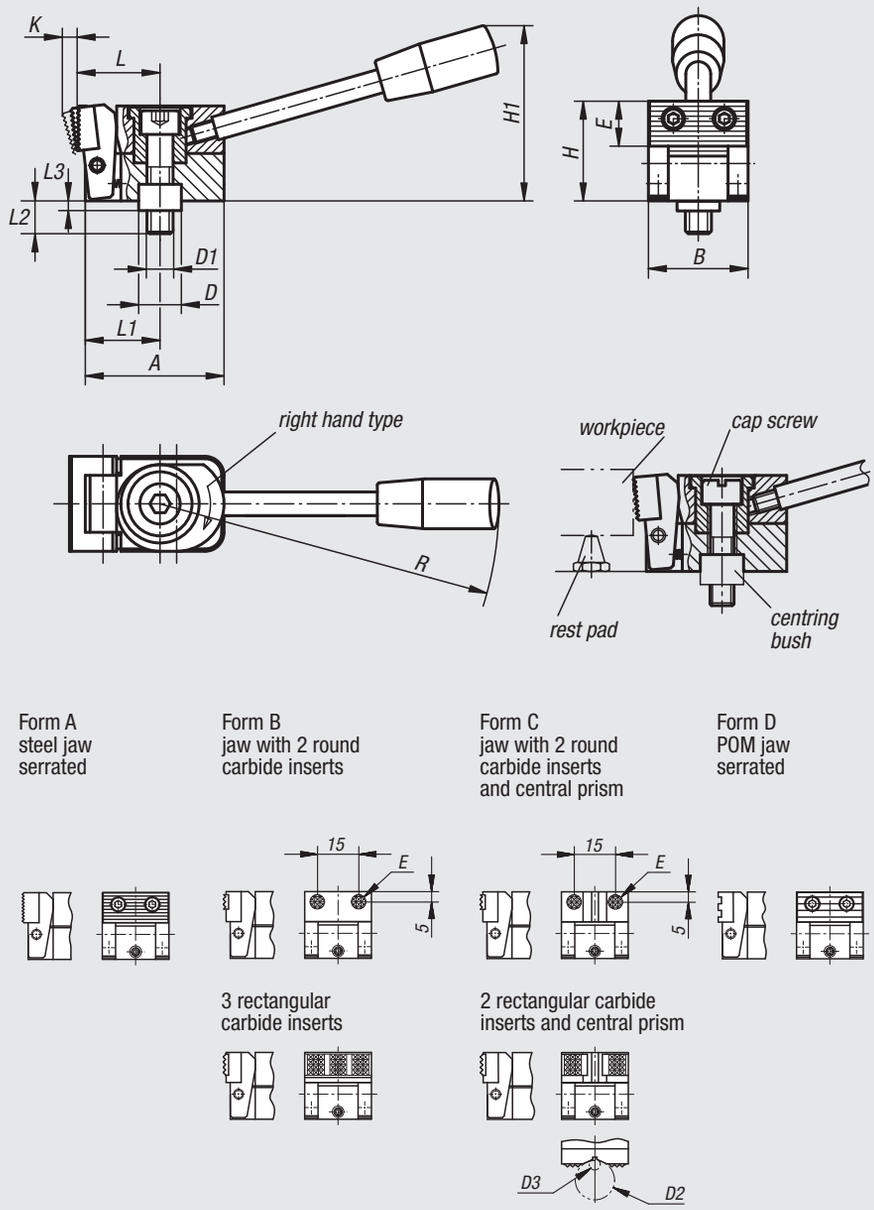

Material:
Steel.

Version:
Case-hardened and black oxidised.

Sample order:
nlm 04518-006005

Note:
This is a quick-action side clamp where workpieces are clamped by rotating a cam wheel which exerts pressure on the swivel jaw, simultaneously producing a positive down force.
Using the centring bush (see diagram), the side clamp can be mounted and positioned on a modular grid system.

The versions 04518-006010, 04518-006015, 04518-006030 and 04518-006035 have 2 round carbide inserts.

Clamping force:
04518-006... = 3800 N
04518-010... = 7200 N

Order No.	Form	Version	A	B	D	D1	D2 max.	D3 min.	E	H	H1	K	L	L1	L2	L3	R	Clamping force kN
04518-006005	A	right	38,5	25	12	M6	-	-	11	25	45	4	22	20	17	4	110	3,8
04518-010005	A	right	58,5	40	18	M10	-	-	18	40	74	6	35	31,5	27	6	143	7,2
04518-006025	A	left	38,5	25	12	M6	-	-	11	25	45	4	22	20	17	4	110	3,8
04518-010025	A	left	58,5	40	18	M10	-	-	18	40	74	6	35	31,5	27	6	143	7,2
04518-006010	B	right	38,5	25	12	M6	-	-	ø8	24	45	3,5	22	20	17	4	110	3,8
04518-010010	B	right	58,5	40	18	M10	-	-	12,7	39	74	5,5	37	31,5	27	6	143	7,2
04518-006030	B	left	38,5	25	12	M6	-	-	ø8	24	45	3,5	22	20	17	4	110	3,8
04518-010030	B	left	58,5	40	18	M10	-	-	12,7	39	74	5,5	37	31,5	27	6	143	7,2
04518-006015	C	right	38,5	25	12	M6	9,5	2,5	ø8	24	45	3,5	22	20	17	4	110	3,8
04518-010015	C	right	58,5	40	18	M10	27	4,5	12,7	39	74	5,5	37	31,5	27	6	143	7,2
04518-006035	C	left	38,5	25	12	M6	9,5	2,5	ø8	24	45	3,5	22	20	17	4	110	3,8
04518-010035	C	left	58,5	40	18	M10	27	4,5	12,7	39	74	5,5	37	31,5	27	6	143	7,2
04518-006020	D	right	38,5	25	12	M6	-	-	11	25	45	4,5	22	20	17	4	110	3,8
04518-010020	D	right	58,5	40	18	M10	-	-	18	40	74	7	34,5	31,5	27	6	143	7,2
04518-006040	D	left	38,5	25	12	M6	-	-	11	25	45	4,5	22	20	17	4	110	3,8
04518-010040	D	left	58,5	40	18	M10	-	-	18	40	74	7	34,5	31,5	27	6	143	7,2

Side clamps

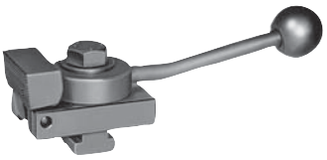

Material:
Steel.

Version:
Case-hardened and black oxidised.

Sample order:
nlm 04520-114X2

Note:
This is a quick-action side clamp where workpieces are clamped by rotating a cam wheel which exerts pressure on the swivel jaw, simultaneously producing a positive down force. The low-profile design allows workpieces to be machined over the entire top surface without the need to move the the clamp. A spring withdraws the jaw when opened.
The clamp can be positioned parallel to the T-slot by mounting on the seating block 04512.

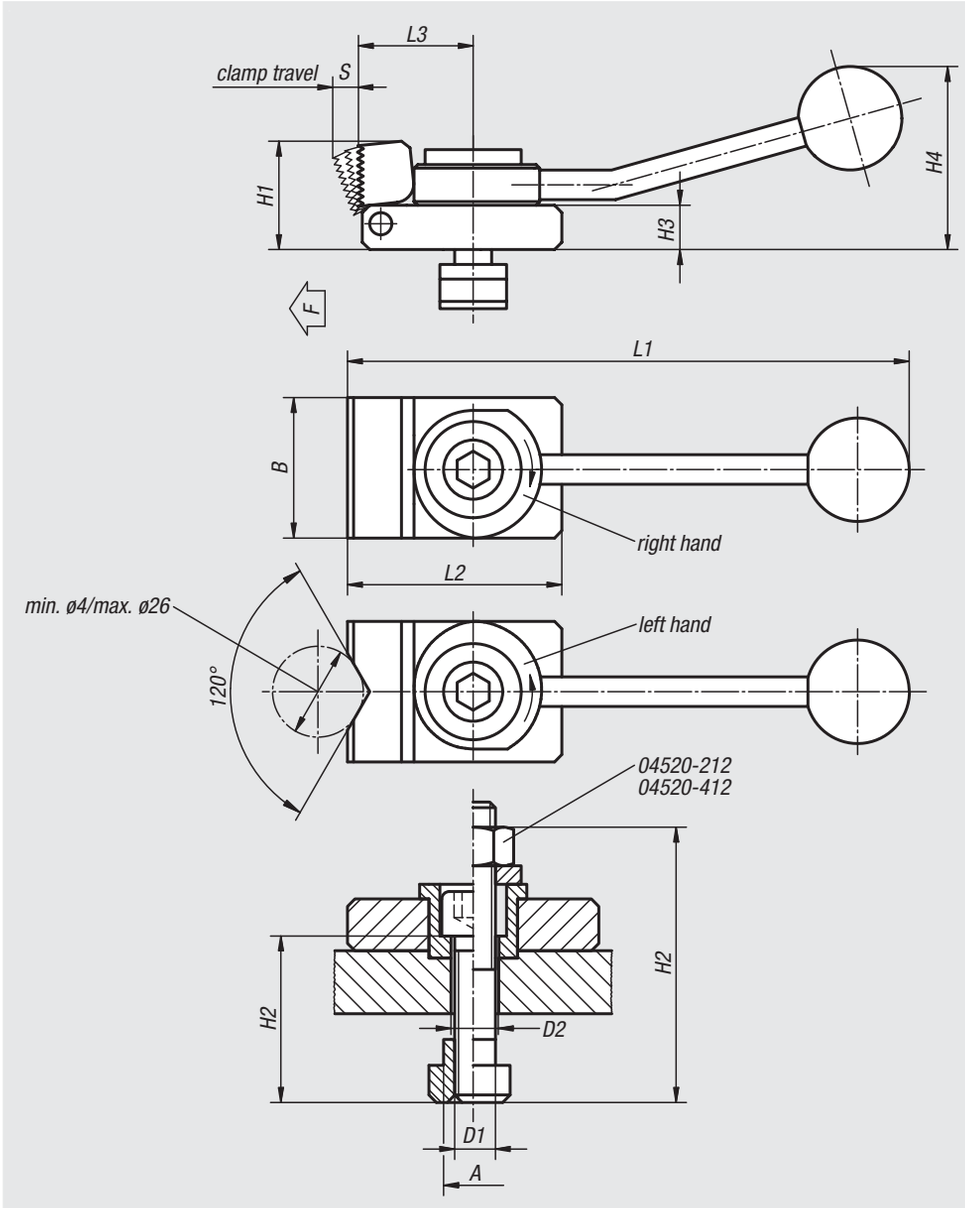

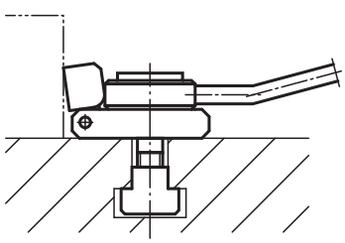

Order No. right	Order No. left	Type	slot dimension A	D1	D2	L1	L2	L3	B	H1	H2	H3	H4	S	F max. kN
04520-310X2	**04520-110X2**	prism jaw	10	M8	8,4	132	50	32	32	20	30	8	40	3	3,5
04520-310X1	**04520-110X1**	flat jaw	10	M8	8,4	132	50	32	32	20	30	8	40	3	3,5
04520-312X2	**04520-112X2**	prism jaw	12	M8	8,4	132	50	32	32	20	30	8	40	3	3,5
04520-312X1	**04520-112X1**	flat jaw	12	M8	8,4	132	50	32	32	20	30	8	40	3	3,5
04520-412X2	**04520-212X2**	prism jaw	12	M12	12,5	190	72	40	48	38	60	16	62	4	7
04520-412X1	**04520-212X1**	flat jaw	12	M12	12,5	190	72	40	48	38	60	16	62	4	7
04520-314X2	**04520-114X2**	prism jaw	14	M8	8,4	132	50	32	32	20	30	8	40	3	3,5
04520-314X1	**04520-114X1**	flat jaw	14	M8	8,4	132	50	32	32	20	30	8	40	3	3,5
04520-414X2	**04520-214X2**	prism jaw	14	M12	12,5	190	72	40	48	38	40	16	62	4	7
04520-414X1	**04520-214X1**	flat jaw	14	M12	12,5	190	72	40	48	38	40	16	62	4	7
04520-416X2	**04520-216X2**	prism jaw	16	M12	12,5	190	72	40	48	38	40	16	62	4	7
04520-416X1	**04520-216X1**	flat jaw	16	M12	12,5	190	72	40	48	38	40	16	62	4	7
04520-418X2	**04520-218X2**	prism jaw	18	M12	12,5	190	72	40	48	38	40	16	62	4	7
04520-418X1	**04520-218X1**	flat jaw	18	M12	12,5	190	72	40	48	38	40	16	62	4	7

Toe clamps compact

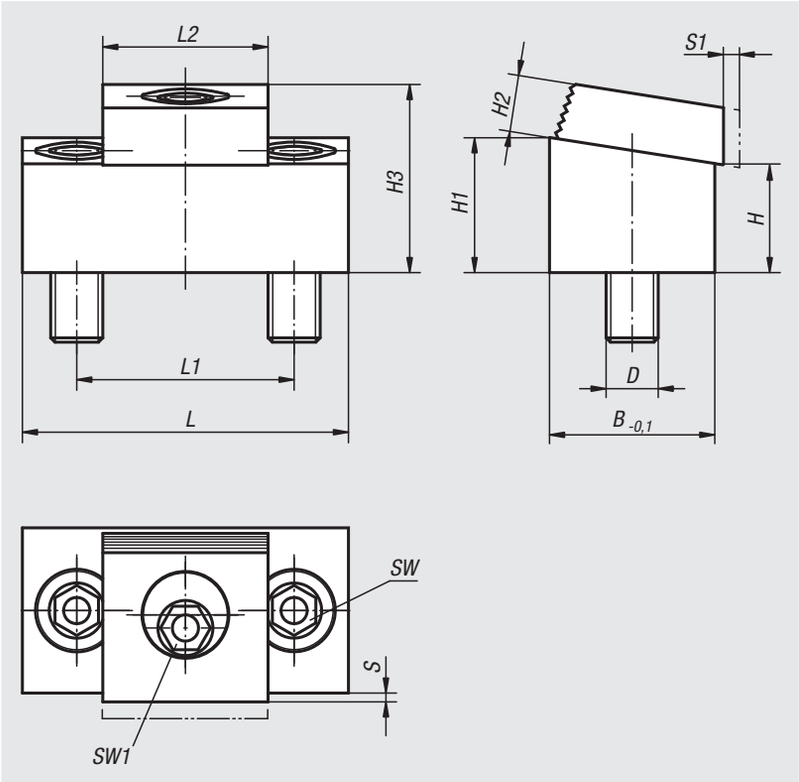

Material:
Steel.

Version:
Body tempered and black oxidised.
Square washer case-hardened and brass-plated.

Sample order:
nlm 04521-10

Note:
This cam action compact toe clamp requires very little space to produce multi-fixture clamping.
Workpieces can be clamped in series by using the back side of a clamp as a stop for the next row.
Mount preferably in slots with B +0.05 mm. The height of the clamp can be adjusted by altering the slot depth.

Example of series clamping using compact toe clamps

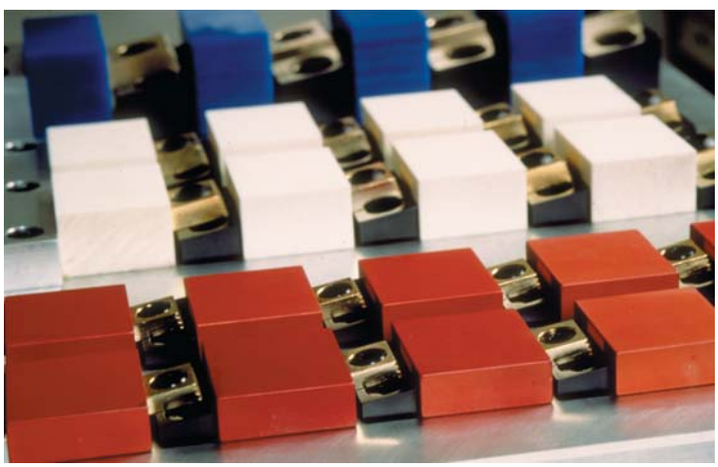

Order No.	L	L1	L2	B	H	H1	H2	H3 max.	S	D	S1 (travel)	SW	SW1	Clamping force kN	Tightening torque max. Nm
04521-08	43,2	25,4	19	19	12,7	15,7	6,4	21,4	1,5	M8	1,6	5	7	8,9	28
04521-10	54	33,5	25,4	25,4	11,4	15,4	9,7	24,5	1,8	M10	2	7	8	17,8	88
04521-12	75	50,8	38	38,1	25,5	31,5	13	43	2,05	M12	2,5	10	12	26,7	135

Wedge clamps

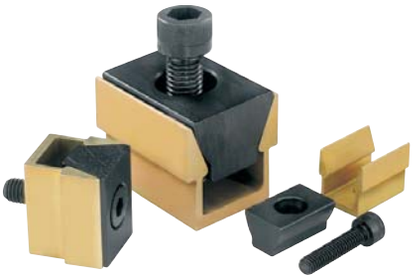

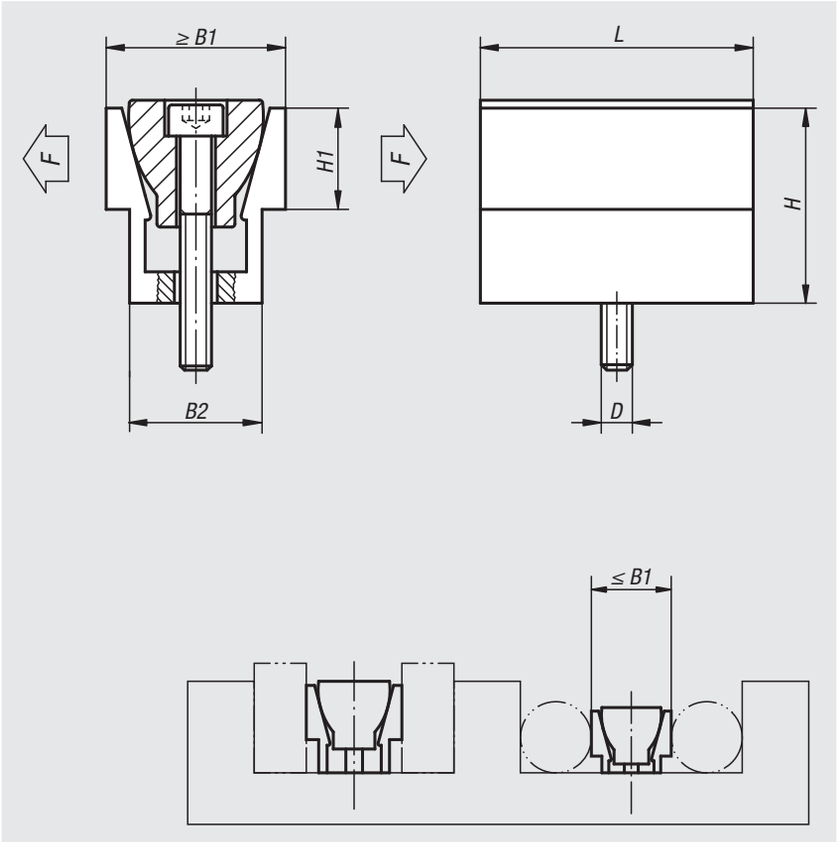

Material:
Channel aluminium profile.
Wedge hardened steel.

Version:
Channel anodized.
Wedge black oxidised.

Sample order:
nlm 04522-08

Note:
Two workpieces can be held simultaneously with the wedge clamp. They are ideal for clamping round or rectangular pieces. The compact design allows space-saving series clamping.

Drawing reference:
In clamped position dimension B1 max. given in the table should be achieved.

Order No.	D	L	B1 min. - max.	B2	H	H1	F kN	Tightening torque max. Nm
04522-04	M4	15,9	12,3 - 13,1	10,4	12,7	5,6	2,2	3,4
04522-06	M6	23,8	18,6 - 19,9	16,1	19	9,5	6,7	14,3
04522-08	M8	31,7	24,8 - 26,6	20,8	25,4	12,7	8,9	14,5
04522-12	M12	47,6	37,3 - 39,7	30,8	38,1	19	15,6	38,4
04522-16	M16	63,5	49,7 - 52,8	41,2	50,8	25,4	26,7	74,6

Wedge clamps

machinable

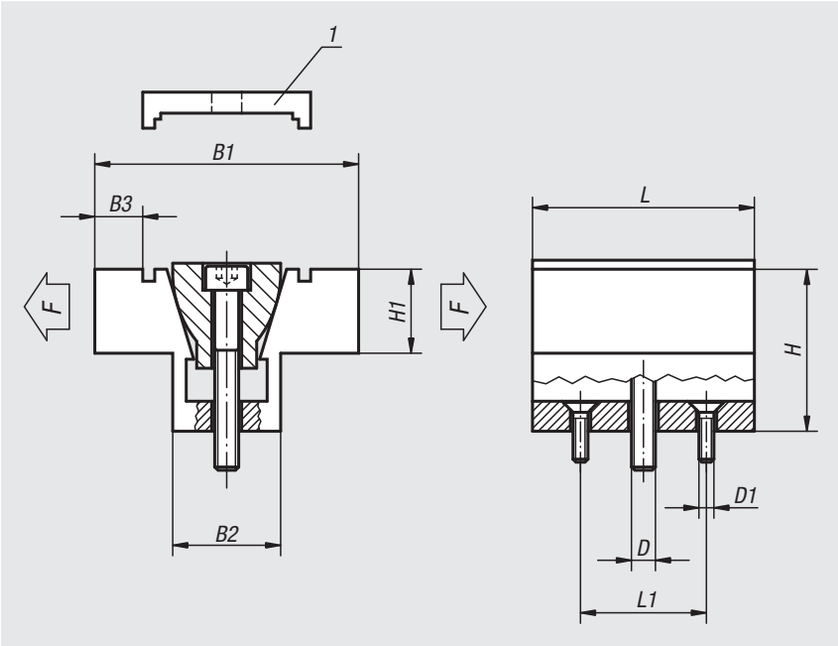

Material:
Channel aluminium profile.
Wedge hardened steel.

Version:
Channel anodized.
Wedge black oxidised.

Sample order:
nlm 04523-08

Note:
Two workpieces can be held simultaneously with the wedge clamp. The jaws have extra material allowing them to be machined to conform to the shape of the workpiece. The compact design allows space-saving series clamping.

Drawing reference:
1) The locking plate is only used for machining the form, not for clamping the workpiece.

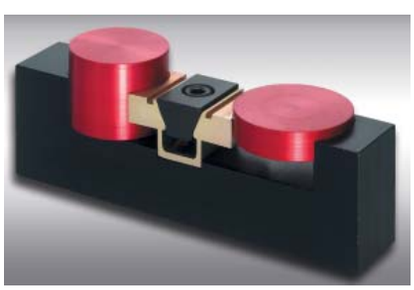

Order No.	D	D1	L	L1	B1 min. - max.	B2	B3	H	H1	F kN	Tightening torque max. Nm
04523-04	M4	M2	15,7	10,16	28,6 - 29,1	10,6	4,6	12,7	6,3	2,2	3,4
04523-06	M6	M4	23,9	15,9	38,1 - 39	16,1	6,6	19,1	9,4	6,7	14,3
04523-08	M8	M4	31,8	20,6	50,8 - 52	20,8	9,9	25,4	12,7	8,9	14,5
04523-12	M12	M5	47,5	30,5	76,2 - 78	30,9	15,7	38,1	19	15,6	38,4
04523-16	M16	M6	63,5	41,28	101,6 - 103,9	41,3	20,3	50,8	25,4	26,7	74,6

Wedge clamps

jaw face smooth or serrated

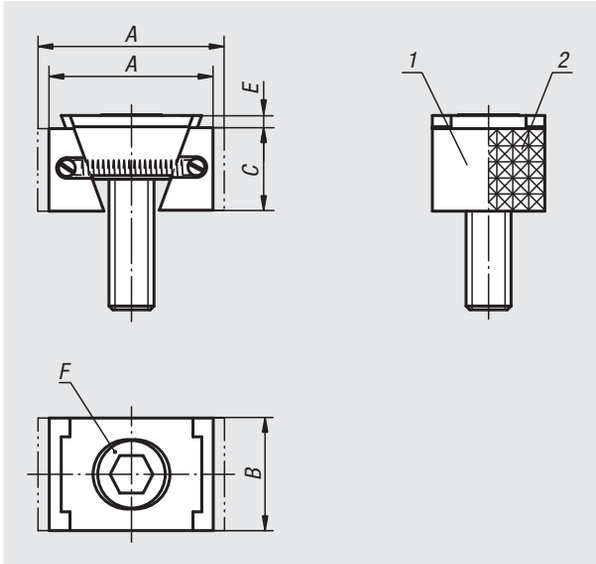

Material:
Wedge and jaw segments carbon steel.

Version:
Wedge and jaw segments hardened, black.

Sample order:
nlm 04524-2208

Note:
The functioning principle make the wedge clamps ideal for series clamping. The wedge form can exert high clamping forces.
These wedge clamps can be mounted in grid holes or T-slots.
Tightening the socket screw moves the wedge down and the jaws out pressing the workpieces against the fixtures fixed stops.
The wedge has a slightly elongated hole allowing for movement to compensate for tolerances.

Spread width:
M8 = ±0.5 mm
M10 = ±1.0 mm
M12 = ±1.0 mm
M16 = ±1.5 mm

Drawing reference:
1) Jaw face smooth
2) Jaw face serrated

3) Wedge clamps
4) Workpiece
5) Fixed stop

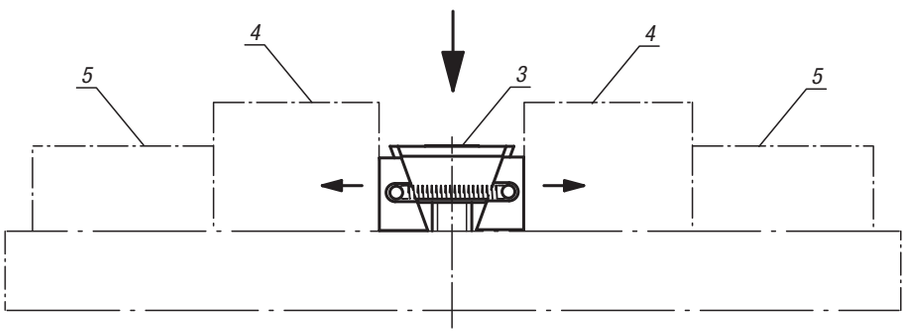

Wedge clamps, narrow version

Order No. smooth	Order No. serrated	A min.	A max.	B	C	E	F DIN 6912 cap screw	Clamping force kN	Tightening torque Nm
04524-1108	**04524-2108**	30,5	33,5	24	15	2	M8x25	15	25
04524-1110	**04524-2110**	32	37	28	19	3,5	M10x25	20	49
04524-1112	**04524-2112**	44	49,5	30	22	3,5	M12x40	30	85
04524-1116	**04524-2116**	55	62	40	29	4	M16x60	50	210

Wedge clamps, wide version

Order No. smooth	Order No. serrated	A min.	A max.	B	C	E	F DIN 6912 cap screw	Clamping force kN	Tightening torque Nm
04524-1208	**04524-2208**	30,5	33,5	30	15	2	M8x25	15	25
04524-1210	**04524-2210**	32	37	38	19	3,5	M10x25	20	49
04524-1212	**04524-2212**	44	49,5	48	22	3,5	M12x40	30	85
04524-1216	**04524-2216**	55	62	48	29	4	M16x60	50	210

Wedge clamps

machinable

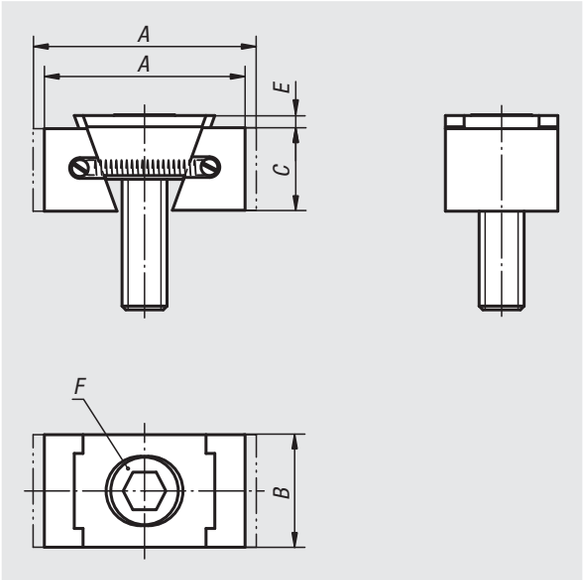

Material:
Wedge and jaw segments carbon steel.

Version:
Wedge and jaw segments tempered, black.

Sample order:
nlm 04524-3110

Note:
These wedge clamps have extra long jaws. This extra material allows the jaws to machined to suit the form of the workpiece. The functioning principle make the wedge clamps ideal for series clamping. The wedge form can exert high clamping forces. These wedge clamps can be mounted in grid holes or T-slots. Tightening the socket screw moves the wedge down and the jaws out pressing the workpieces against the fixtures fixed stops. The wedge has a slightly elongated hole allowing for movement to compensate for tolerances.

Spread width:
M8 = ±0.5 mm
M10 = ±1.0 mm
M12 = ±1.0 mm
M16 = ±1.5 mm

Attention:
These wedge clamps have a machining allowance per jaw of 3 mm for version M8 and 5 mm for versions M10, M12 and M16.

Drawing reference:
1) wedge clamps
2) workpiece
3) fixed stop
4) base plate
5) hydraulic/pneumatic cylinder

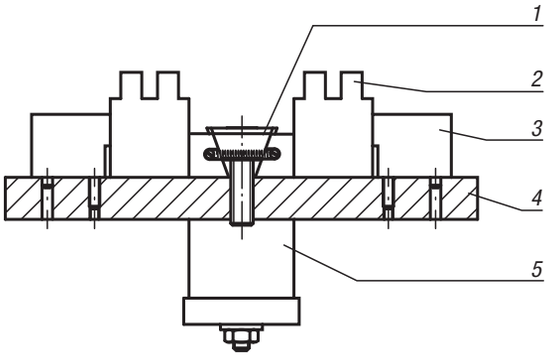

Order No.	Version	A min.	A max.	B	C	E	F DIN 6912 cap screw	Clamping force kN	Tightening torque Nm
04524-3108	narrow	36,5	39,5	24	15	2	M8x25	11	19
04524-3110	narrow	42	47	28	19	3,5	M10x25	15	37
04524-3112	narrow	54	59,5	30	22	3,5	M12x40	23	65
04524-3116	narrow	65	72	40	29	4	M16x60	38	160
04524-3208	wide	36,5	39,5	30	15	2	M8x25	11	19
04524-3210	wide	42	47	38	19	3,5	M10x25	15	37
04524-3212	wide	54	59,5	48	22	3,5	M12x40	23	65
04524-3216	wide	65	72	48	29	4	M16x60	38	160

Wedge clamps

jaw faces serrated

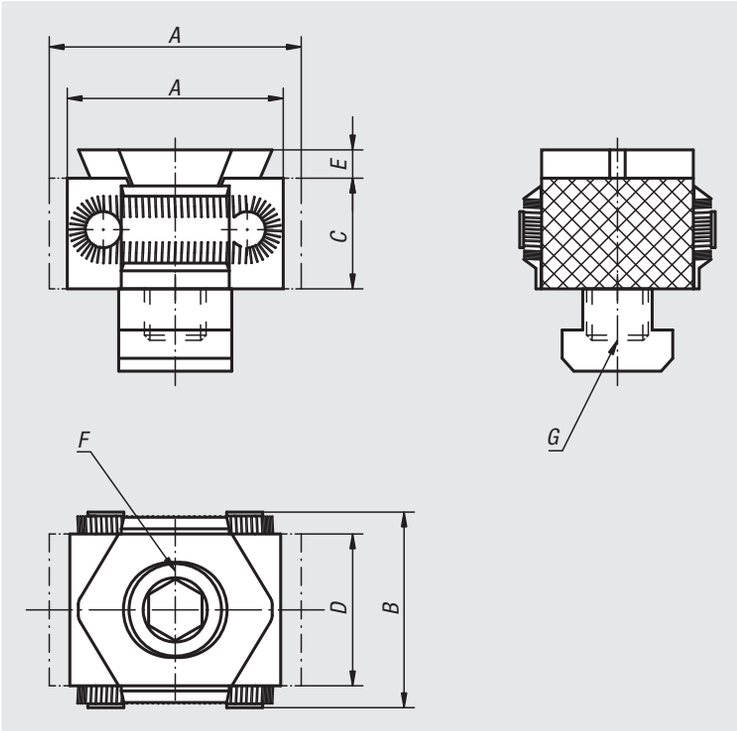

Material:
Body and clamping segments tool steel.

Version:
Body hardened.
Jaw segments hardened (49-51 HRC) black oxidised.
Wedge faces ground.

Sample order:
nlm 04525-1618

Note:
The compact design makes these wedge clamps ideal for horizontal and vertical series clamping. The hardened and ground wedge faces can exert high clamping forces. These wedge clamps can be mounted in grid holes or T-slots. Tightening the DIN 912 socket screw moves the wedge down and the jaws out pressing the workpieces against the fixtures fixed stops.

The jaws of version 04525-08 and 04525-0810 are not serrated.

The wedge has a slightly elongated hole allowing for movement.

Spread width:
04525-08 = ±0.5 mm
04525-12 = ±1.0 mm
04525-16 = ±1.5 mm

Drawing reference:
1) Wedge clamps
2) Workpiece
3) Fixed stop

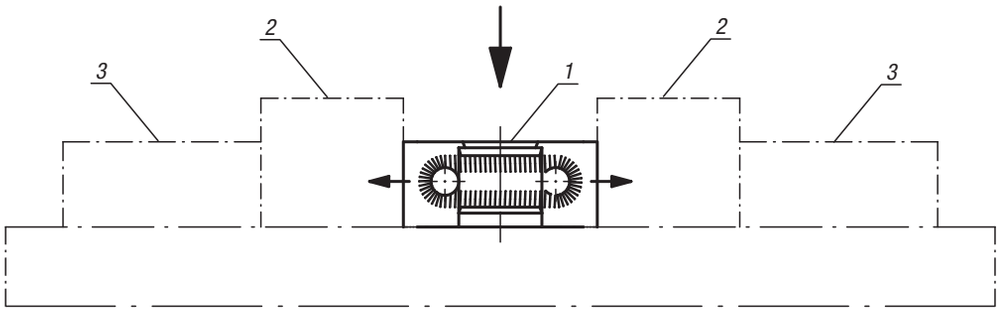

Order No.	A min.	A max.	B	C	D	E	F Socket head screw DIN 912	G	Clamping force kN	Tightening torque Nm
04525-08	27	31	29	15	21	2,5	M8x25	for tapped hole	15	25
04525-0810	27	31	29	15	21	2,5	M8x25	for T-slot 10	15	25
04525-12	42	49	41	22	30	4	M12x40	for tapped hole	30	85
04525-1214	42	49	41	22	30	4	M12x30	for T-slot 14	30	85
04525-16	57	66	56	29	42	5	M16x60	for tapped hole	50	210
04525-1618	57	66	56	29	42	5	M16x50	for T-slot 18	50	210

Wedge clamps

machinable

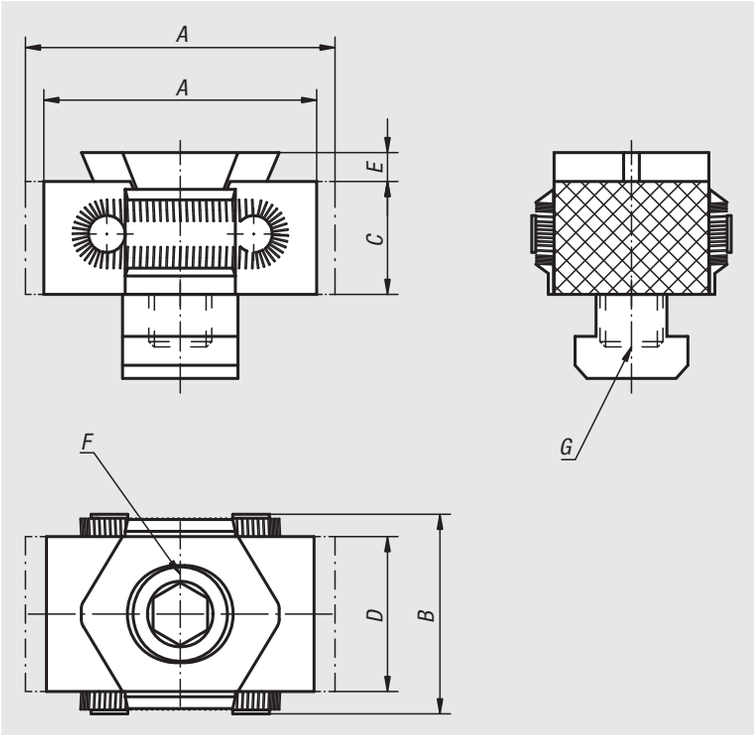

Material:
Body tool steel.
Jaw segments tool steel (30 HRC).

Version:
Body hardened.
Jaw segments black oxidised.
Wedge faces ground.

Sample order:
nlm 04526-12

Note:
The special feature of the wedge clamp lies in the machining allowance per vice jaw of 3 mm for version 04526-08 and 5 mm for versions 04526-12 and 04526-16.
This extra length allows for forms adjusted to the workpiece geometry to be incorporated (see illustration).

Vice jaws version 04526-08 and 04526-0810 are not serrated.

Travel acc. to order No.:
04526-08 = ±0.5 mm
04526-12 = ±1.0 mm
04526-16 = ±1.5 mm

On request:
Pre-formed jaw segments or other hardness grades.

Drawing reference:
1) wedge clamps
2) workpiece
3) fixed stop
4) base plate
5) hydraulic/pneumatic cylinder

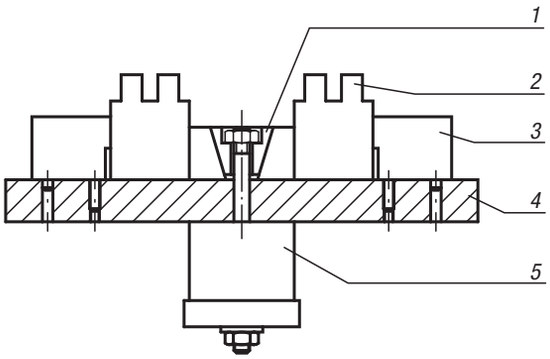

Order No.	A min.	A max.	B	C	D	E	F Socket head screw DIN 912	G	Clamping force kN	Tightening torque Nm
04526-08	33	37	29	15	21	2,5	M8x25	for tapped hole	15	25
04526-0810	33	37	29	15	21	2,5	M8x25	for T-slot 10	15	25
04526-12	52	59	41	22	30	4	M12x40	for tapped hole	30	85
04526-1214	52	59	41	22	30	4	M12x30	for T-slot 14	30	85
04526-16	67	76	56	29	42	5	M16x60	for tapped hole	50	210
04526-1618	67	76	56	29	42	5	M16x50	for T-slot 18	50	210

Wedge clamps double

jaw faces serrated

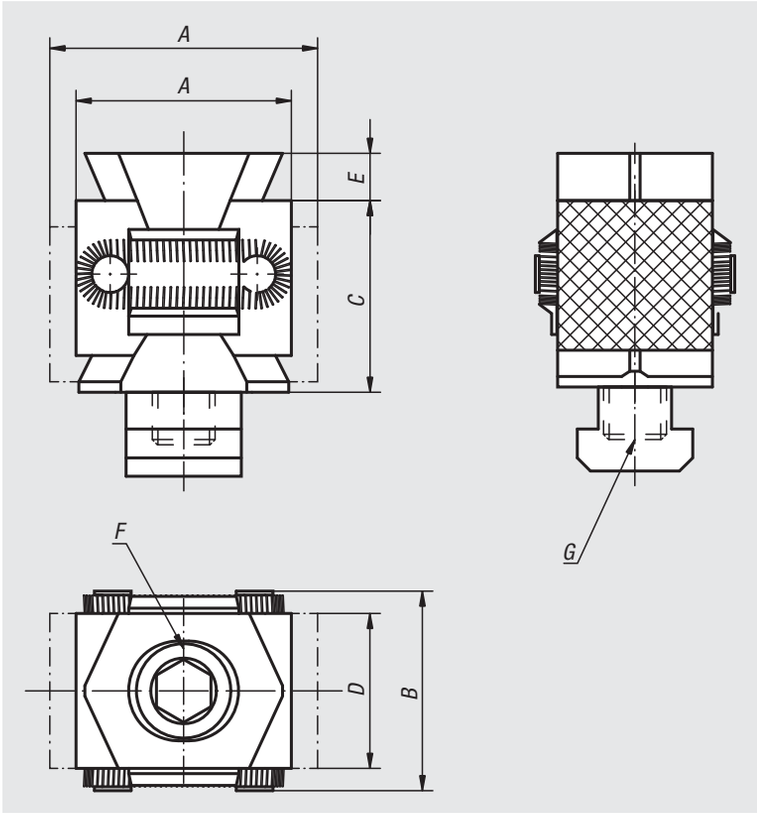

Material:
Body and jaw segments tool steel.

Version:
Body hardened.
Jaw segments hardened (49-51 HRC) and black oxidised.
Wedge faces ground.

Sample order:
nlm 04527-1214

Note:
Because of their compact design, the double wedge clamps are especially suitable for horizontal and vertical multiple clamping. The hardened and ground wedge surfaces make high clamping forces possible.
Optionally, the appropriate wedge clamp can be mounted either in a grid hole or T-slot. Inserting a socket head screw DIN 912 moves the two clamping segments outwards and presses the workpieces against a fixed stop.
The so-called “draw-down effect” is caused by the double wedge of this version.

Travel acc. to order No.:
04527-12 = ±1.0 mm
04527-16 = ±1.5 mm

Drawing reference:
1) Wedge clamps
2) Workpiece
3) Fixed stop

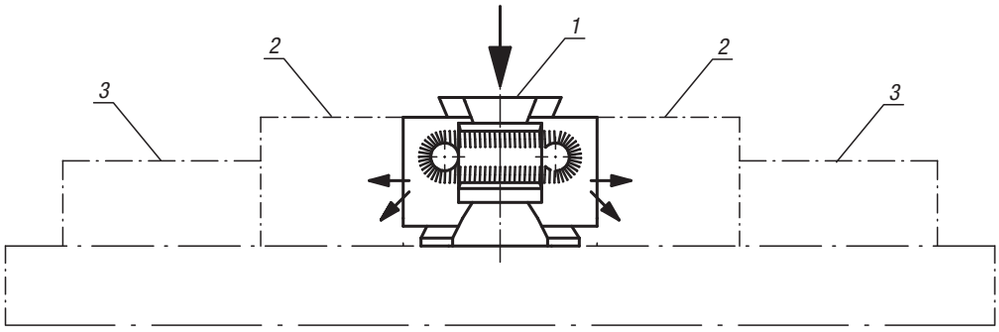

Order No.	A min.	A max.	B	C	D	E	F Socket head screw DIN 912	G	Clamping force kN	Tightening torque Nm
04527-12	42	49	41	36	30	5	M12x60	for tapped hole	40	85
04527-1214	42	49	41	36	30	5	M12x50	for T-slot 14	40	85
04527-16	57	67	56	50	42	5	M16x80	for tapped hole	60	210
04527-1618	57	67	56	50	42	5	M16x70	for T-slot 18	60	210

Example of wedge clamps in use

Wedge clamps
04525

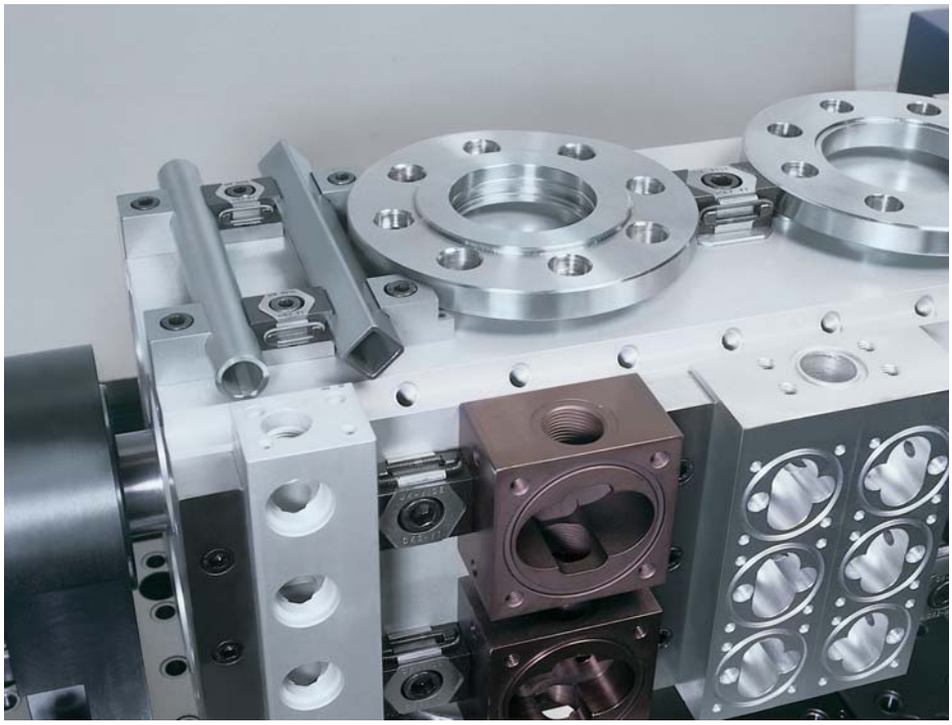

Double wedge clamps
04527

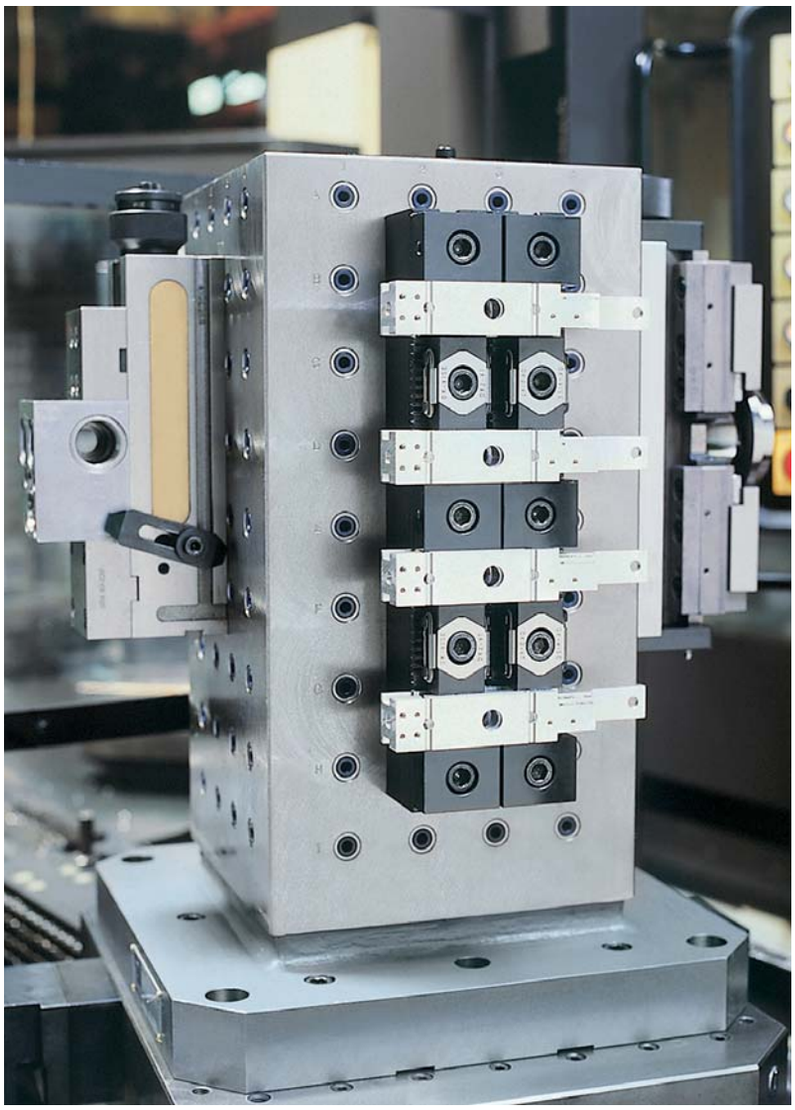

Side clamps

Material:
Body ductile iron (SG iron).
Jaw hardened carbon steel.

Version:
Painted black.
Jaw bright.

Sample order:
nlm 04530-03

Note:
The workpiece is clamped between side clamps and the side stops, simultaneously producing a positive down force.
Side clamps and stops are secured with DIN 912 cylinder screws. A secure clamping is ensured when side clamps and side stops are used together.

Drawing reference:
1) spherical washer set for M12 and M16
2) workpiece

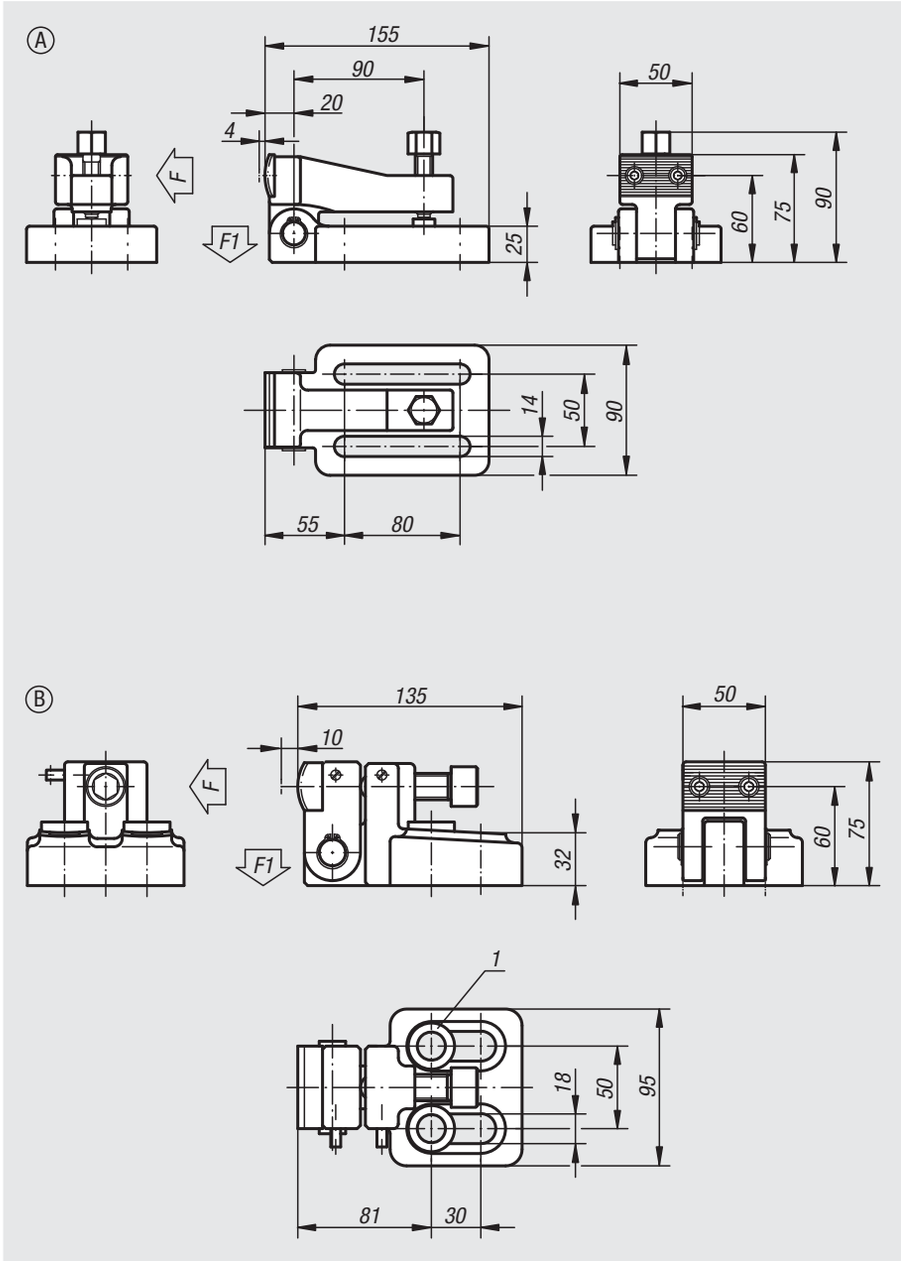

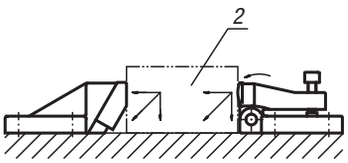

Order No.	Form	F kN	F1 kN	Tightening torque Nm
04530-01	A	29	1,3	38
04530-03	B	58	2,4	150

Side stops

Material:
Body ductile iron (SG iron).
Jaw hardened carbon steel.

Version:
Painted black.
Jaw bright.

Sample order:
nlm 04540-01

Note:
The workpiece is clamped between side clamps and the side stops, simultaneously producing a positive down force.
Side clamps and stops are secured with DIN 912 cylinder screws. A secure clamping is ensured when side clamps and side stops are used together.

Drawing reference:
1) spherical washer set for M12 and M16
2) workpiece

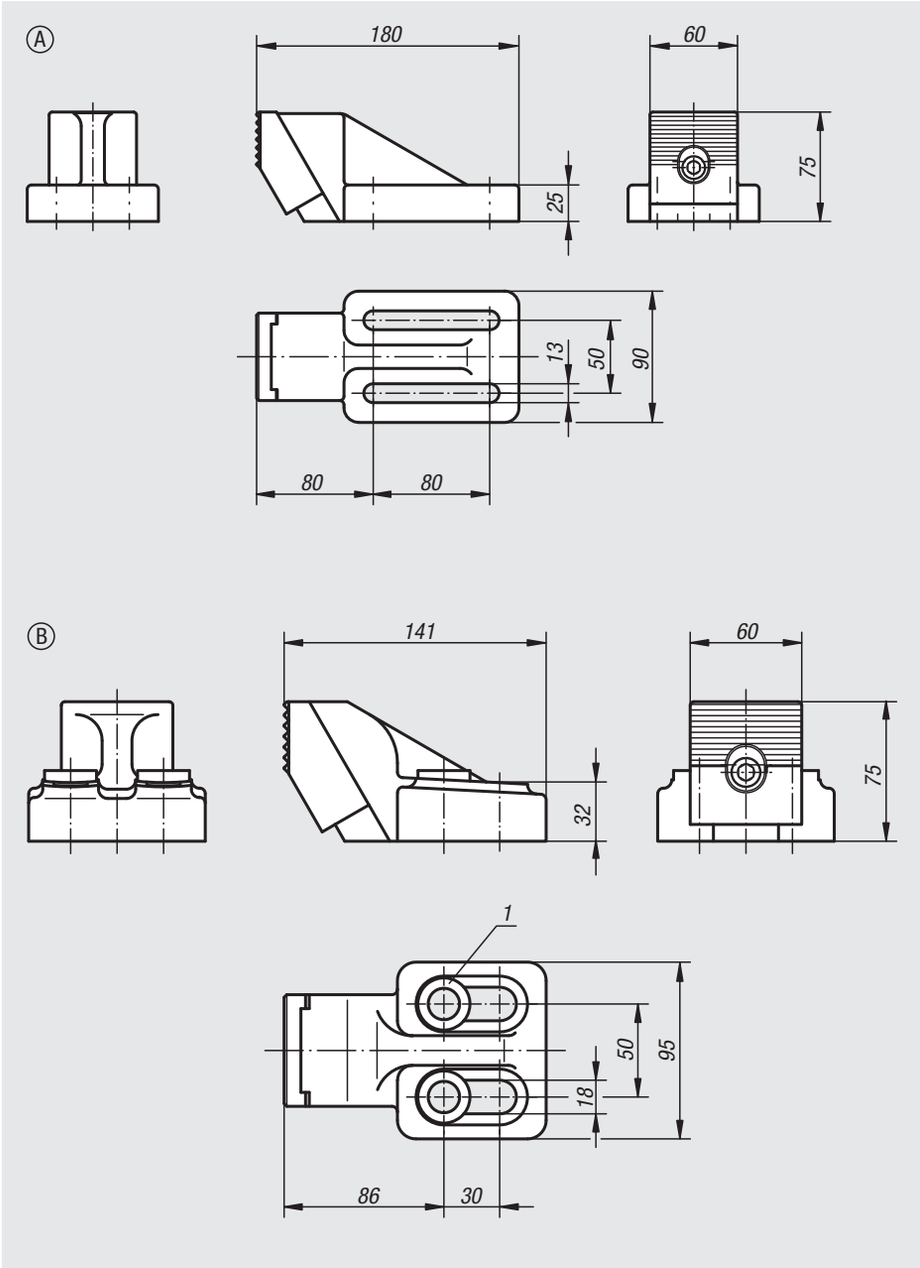

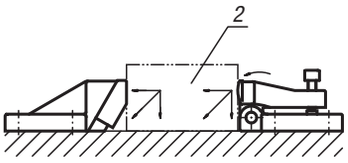

Order No.	Form
04540-01	A
04540-02	B

Side clamps

Material:
Body steel 1.1191.

Version:
Black oxidised.
Centring bush hardened.

Sample order:
nlm 04562-112
(self-aligning pads not supplied)

Note:
The unit comprises of an adjustable side clamp and a side stop and are used to clamp workpieces with a simultaneous positive down force. The side clamp has two DIN 913 grub screws which can be set to prevent backward slippage during clamping.

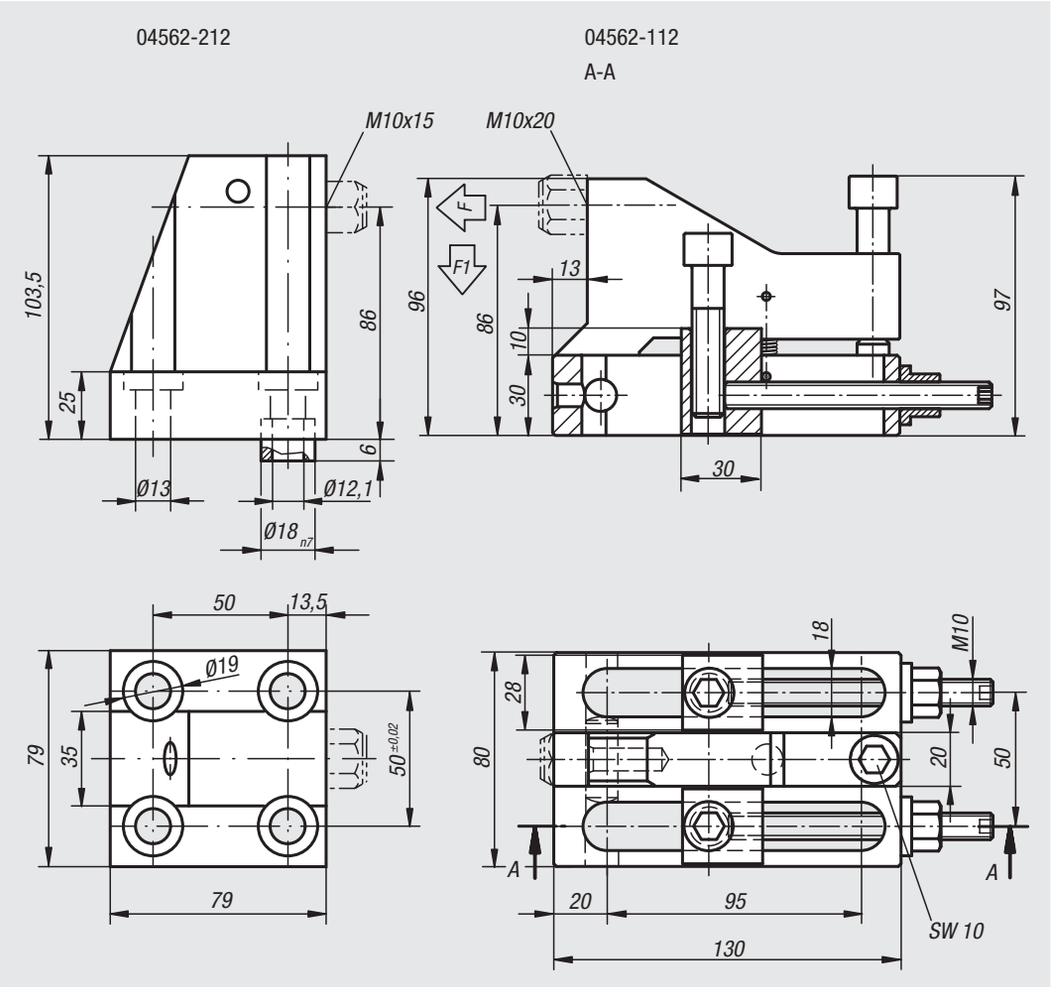

Order No.	F kN	F1 kN
04562-112	25	5
04562-212	22,5	4,5

Side clamps

Material:
Body and grip carbon steel.
Jaw and cam tool steel.
Ball knob Duroplast PF 31.

Version:
Body, jaw and cam hardened and black oxidised.
Grip black oxidised.
Ball knob black.

Sample order:
nlm 04565-0501

Note:
* Permitted hand force for grip.

Accessories:
Standard grips 06355.
Screw-in grips with torque limit 06357.

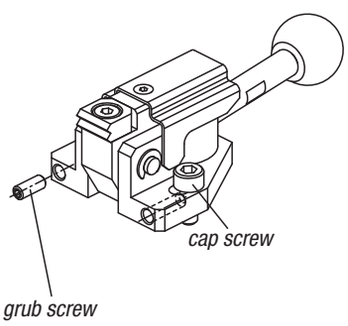

The slots enable final adjustment of the clamping range. Tightening the grub screws in the base front prevents the clamp sliding back during clamping.

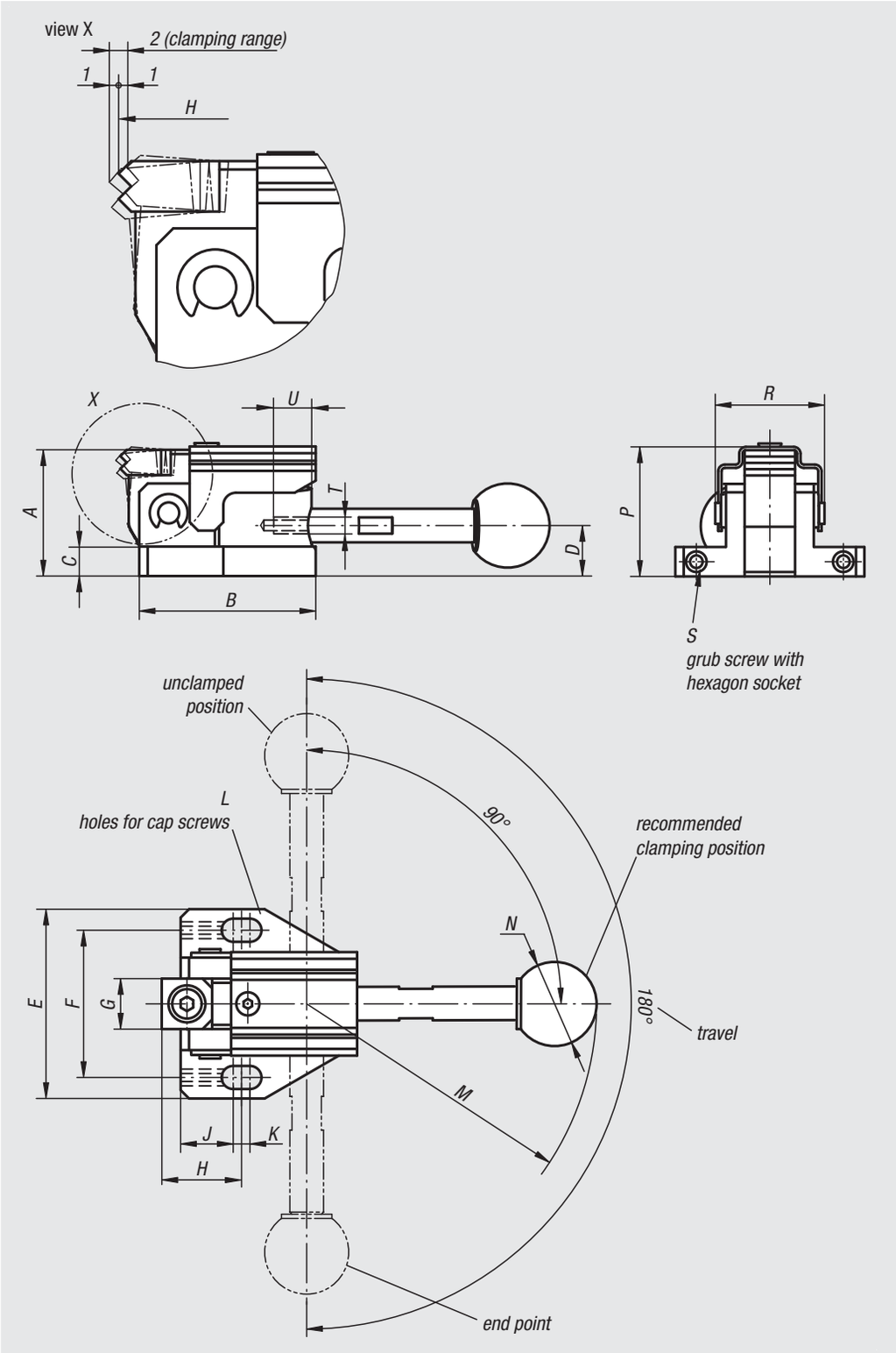

Order No.	Version	A	B	C	D	E	F	G	H	J	K	L	M	N	P	R	S	T	U	Clamping force N	Hand force FH N
04565-0500	without grip	30	42	7	12	45	35	12	19	12,5	4	M5	69	20	31	26	M4x10	M5	7	3000	150*
04565-0501	with grip	30	42	7	12	45	35	12	19	12,5	4	M5	69	20	31	26	M4x10	M5	7	3000	150*
04565-0800	without grip	40	62	10	16	65	50	16	28	18,5	5	M8	104	25	41	38	M4x15	M6	9,5	4000	200*
04565-0801	with grip	40	62	10	16	65	50	16	28	18,5	5	M8	104	25	41	38	M4x15	M6	9,5	4000	200*

Wedge clamps

Material:
Carbon steel.

Version:
Jaw plate hardened (33–39 HRC) and black oxidised.

Sample order:
nlm 04567-11205

Note:
Due to the functioning principle, wedge clamps are suitable for clamping in series.
The wedges generate higher clamping forces.
The wedge clamps are available with cap screws or countersunk screws.
Wedge clamps with pull-down effect.

Drawing reference:
Dimension L refers to ≤ A.
Dimension H refers to ≥ A.

1) O-ring

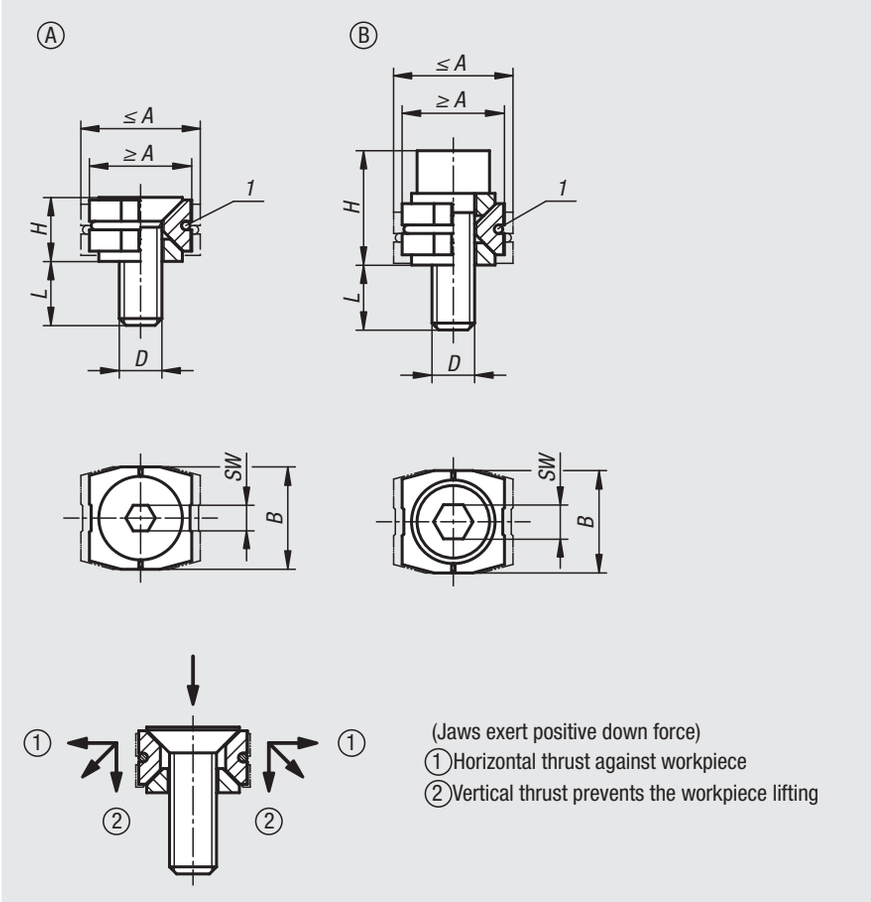

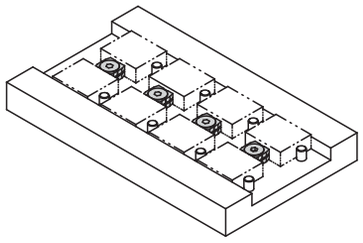

Order No.	Version	Form	A min.	A max.	B	D	H	L	SW	Clamping force kN	Tightening torque Nm
04567-11205	with countersunk screw	A	12	14	12	M5	7,5	9,5	3	2	4,3
04567-11506	with countersunk screw	A	15	17	14,8	M6	8,7	9,3	4	3,5	7,3
04567-11808	with countersunk screw	A	18,5	21,5	18,4	M8	11,8	11,3	5	5	18
04567-21205	with socket head screw	B	12	14	12	M5	13,4	9,6	4	3	5,4
04567-21506	with socket head screw	B	15	17	14,8	M6	15,8	10,2	5	4,5	9,1
04567-21808	with socket head screw	B	18,5	21,5	18,4	M8	21,2	14,9	6	9	22

Toe clamps

Material:
Carbon steel.

Version:
Tempered and black oxidised.

Sample order:
nlm 04570-0806

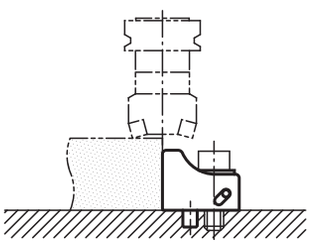

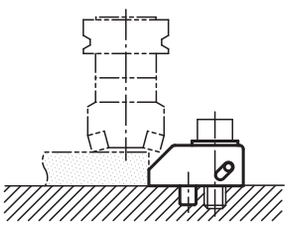

mounting instructions:

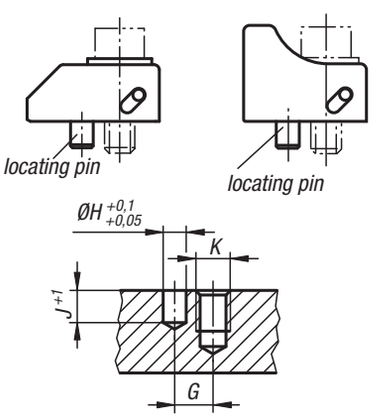

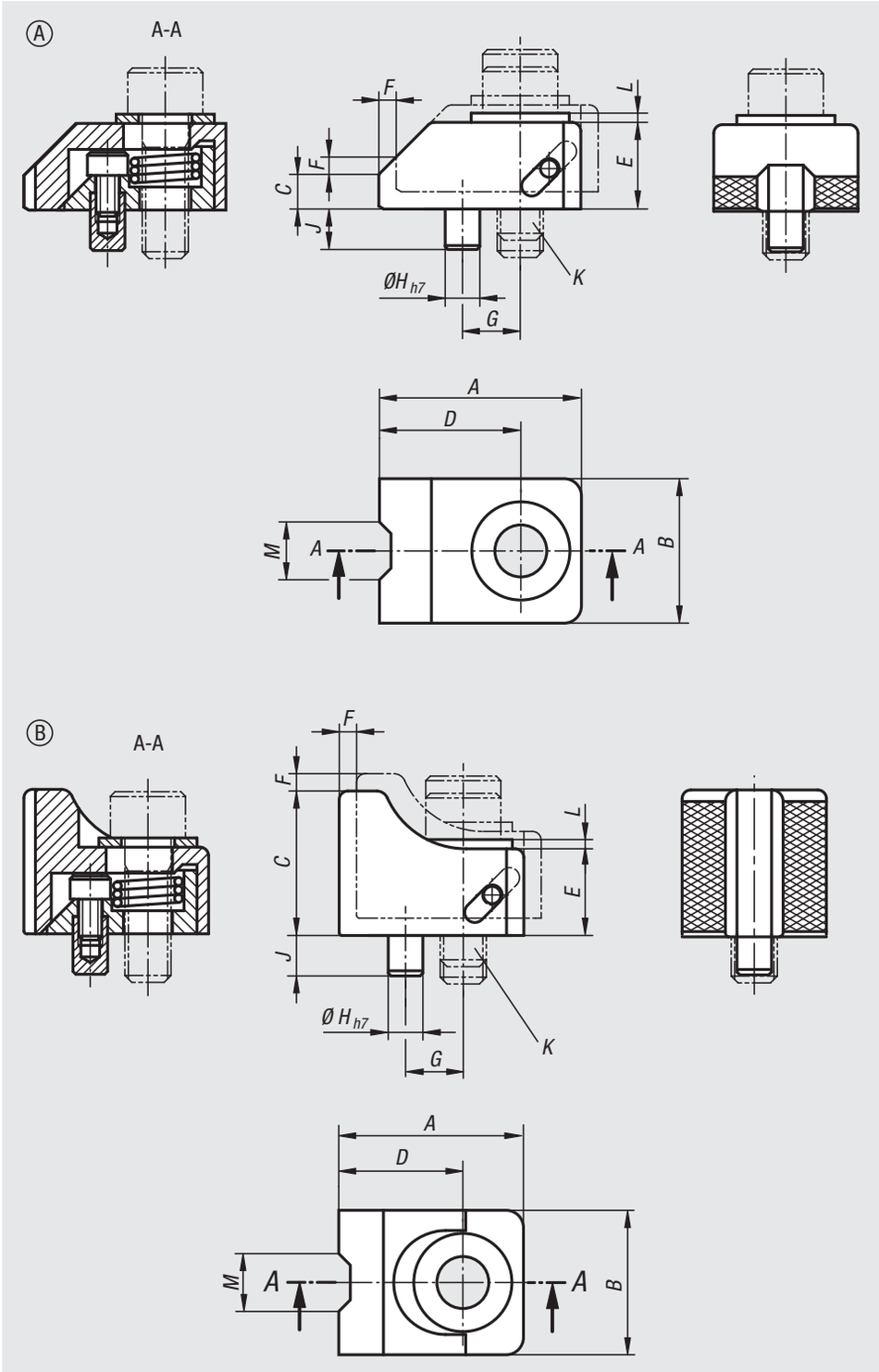

Order No.	Form	A	B	C	D	E	F	G	H	J	K	L	M	Clamping force N	Tightening torque Nm
04570-0806	A	35	25	6	24,5	15	3	10	6	7	M8	1,6	10	7000	25
04570-1008	A	43	30	8	29	19	4	12	6	7	M10	2	11	8500	50
04570-1209	A	54	35	9	37	23	5	16	8	10	M12	2,3	12	20000	90
04570-1610	A	65	40	10	45	25	6	20	10	10	M16	3,2	14	40000	200
04570-0825	B	32	25	25	21,5	15	3	10	6	7	M8	1,6	10	7000	25
04570-1032	B	40	30	32	26	19	4	12	6	7	M10	2	11	8500	50
04570-1238	B	50	35	38	33	23	5	16	8	10	M12	2,3	12	20000	90
04570-1645	B	60	40	45	40	25	6	20	10	10	M16	3,2	14	40000	200

Flat clamps

Material:
Carbon steel.

Version:
Hardened (33–39 HRC) and black oxidised.

Sample order:
nlm 04571-204

Note:
Particularly low workpieces can be clamped using these flat clamps.
Clamping element with pull-down effect.
Clamping element and fixed block in one compact unit.

Drawing reference:
Dimension L1 refers to clamped state.

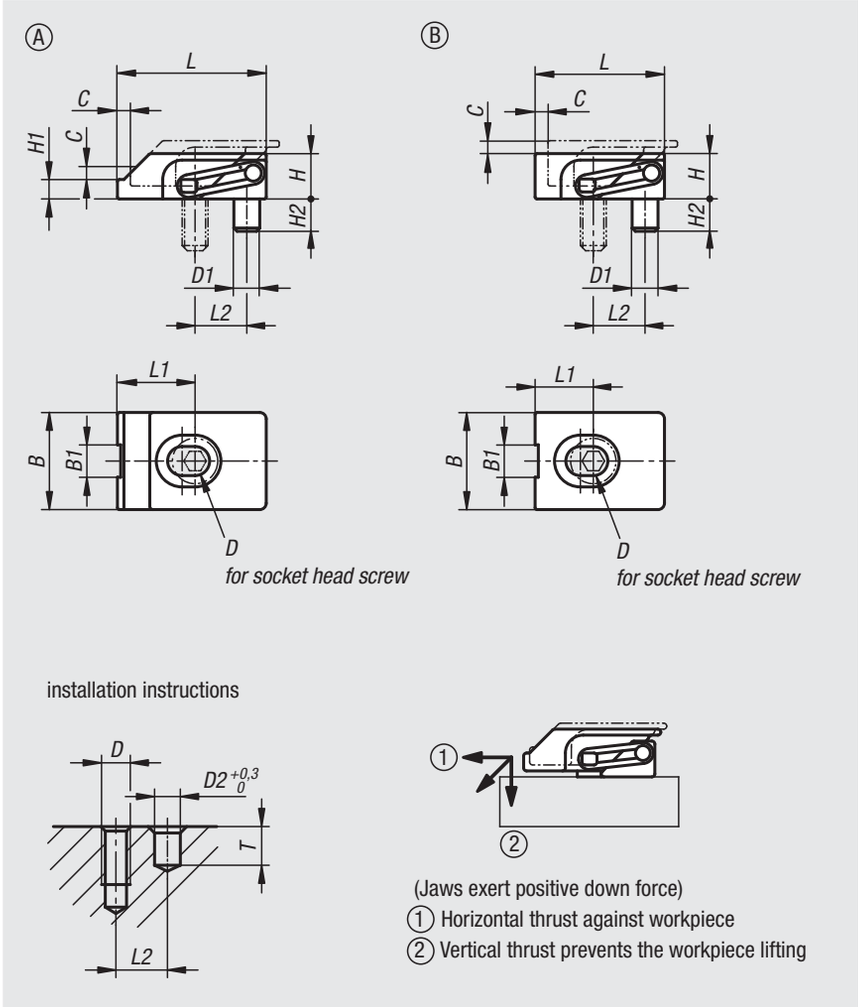

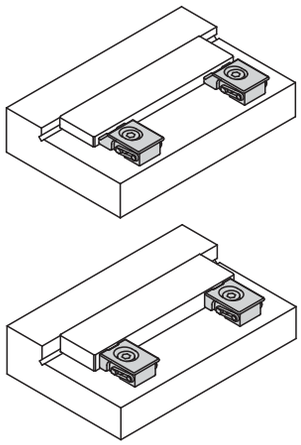

Order No.	Form	B	B1	C	D	D1	D2	H	H1	H2	L	L1	L2	T	Clamping force kN	Tightening torque Nm
04571-104	A	15	5	2	M4	4	4	7	3	5	23	12	8	6	2	2,7
04571-105	A	19	7	2,5	M5	5	5	9	4	6	28	14	10	7	3	5,4
04571-204	B	15	5	2	M4	4	4	7	-	5	20	9	8	6	2,5	2,7
04571-205	B	19	7	2,5	M5	5	5	9	-	6	25	11	10	7	3,5	5,4

Side clamps

Material:
Housing and arm carbon steel.
Jaw tool steel.

Version:
Housing, black oxidised.
Arm and jaw tempered and black oxidised.

Sample order:
nlm 04575-080400

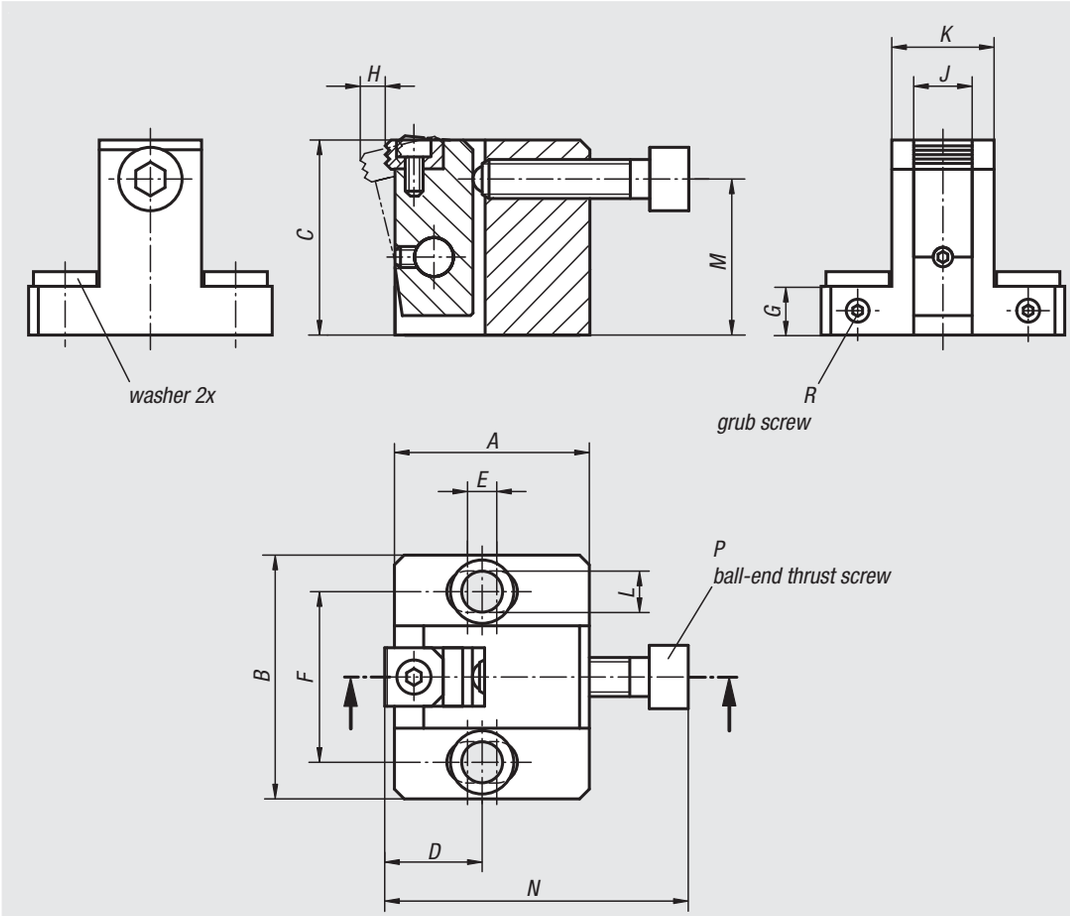

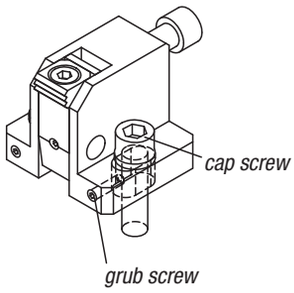

Order No.	A	B	C	D	E	F	G	H	J	K	L	M	N	P	R	Clamping force N	Tightening torque Nm
04575-080400	40	50	40	20	6	35	10	5,3	12	21	8,5	32	62,5	M8x35	M4x10	15000	25
04575-100500	50	65	50	25	8	45	12	7,1	16	27	11	40	74	M10x40	M4x12	27000	50
04575-120600	60	70	60	30	10	50	15	8	20	31	13	48	91	M12x50	M5x15	38000	90
04575-160800	80	90	80	40	15	65	20	10,2	25	39	17	64	115	M16x60	M6x20	46000	130

Side clamps

Material:
Body and arm carbon steel.
Jaw tool steel.

Version:
Body black oxidised.
Arm and jaw tempered and black oxidised.

Sample order:
nlm 04578-080400

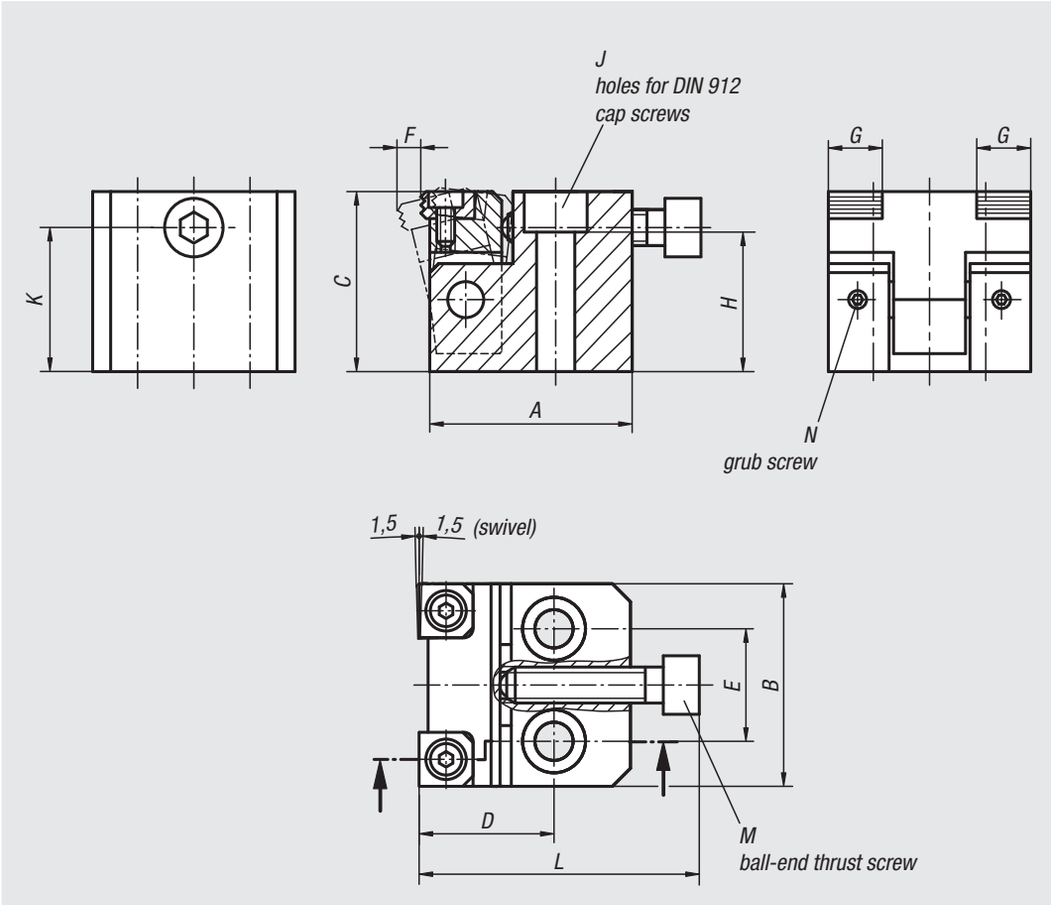

Order No.	A	B	C	D	E	F	G	H	J	K	L	M	N	Clamping force N	Tightening torque Nm
04578-080400	45	45	40	30	25	5,3	12	31	M8	32	62,5	M8x35	M4x4	15000	25
04578-100500	55	55	50	40	30	7,1	16	39	M10	40	74	M10x40	M4x4	27000	50
04578-120600	65	65	60	45	35	8	20	47	M12	48	91	M12x50	M5x5	38000	90

Swivel hold-down clamps

mini, with cam lever

Material:
Carbon steel.

Version:
Tempered and black oxidised.

Sample order:
nlm 04610-100

Note:
Swing clamps are used where the clamping points must be free when the workpiece is loaded or removed.

* Admissible hand force for the handle.

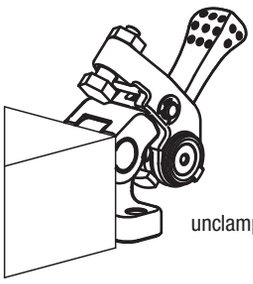

unclamped

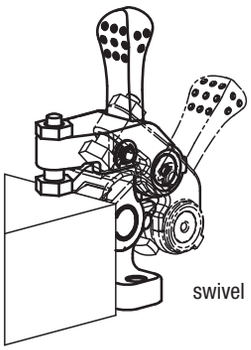

swivel

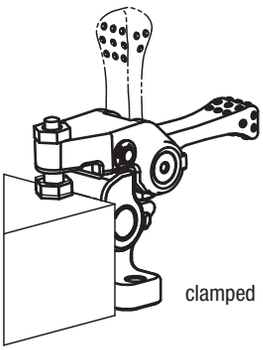

clamped

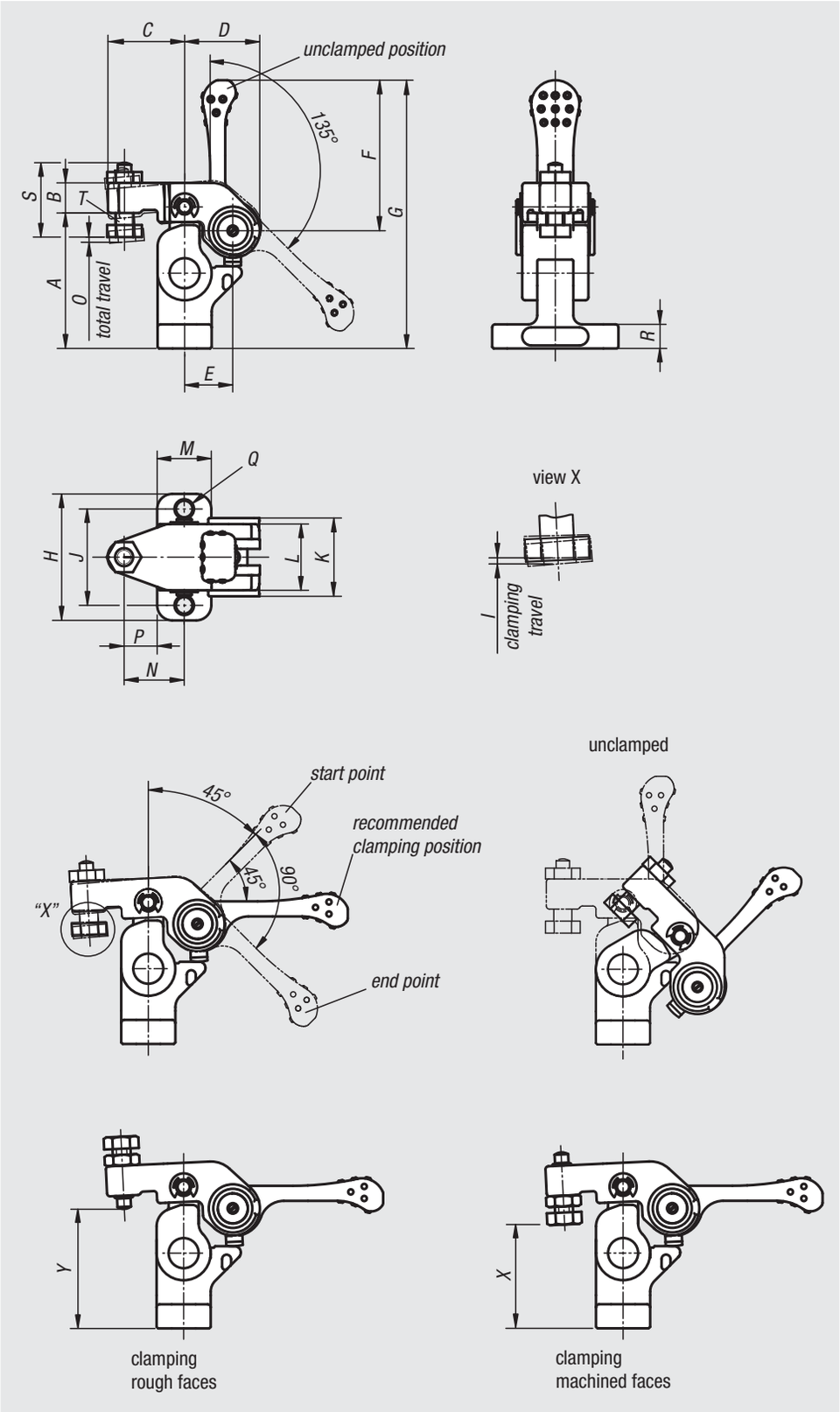

Order No.	A	B	C	D	E	F	G	H	I	J	K	L	M	N	O	P	Q	R	S	T	X min.	X max.	Y min.	Y max.	Clamping force N	Hand force FH N
04610-100	45	10	25,5	25	16	50	89	42	1	32	26	22	18	20	1,5	11	5,5	8	24	M6	31,5	40,5	34,5	43,5	700	100*
04610-150	55	12	32	31	20	63	109	52	1,2	40	32	28	22	25	1,8	14	6,6	10	30,5	M8	36,4	48,6	41,4	53,6	1100	150*

Down-thrust clamps

Material:
Steel.

Version:
Case-hardened, black oxidised and ground.

Sample order:
nlm 04620-23

Note:
The clamping heights can be increased with riser bars 04378 and for 04620-12 to 04620-14 and 04620-22 to 04620-24 reduced by self-aligning pads 02000.
The clamps have the following advantages:
- rapid clamping by hand via threaded spindle and spiral cam.
- quick and easy workpiece exchange by pivoting the clamp arm.
- compact design, small clamping space required.
- simple adaptation to tall clamping heights using the riser cylinders.

The clamps can be mounted in two ways:
1) in a T-slot.
2) by the M12 screw directly in a fixture base.

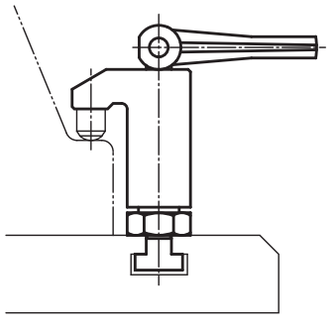

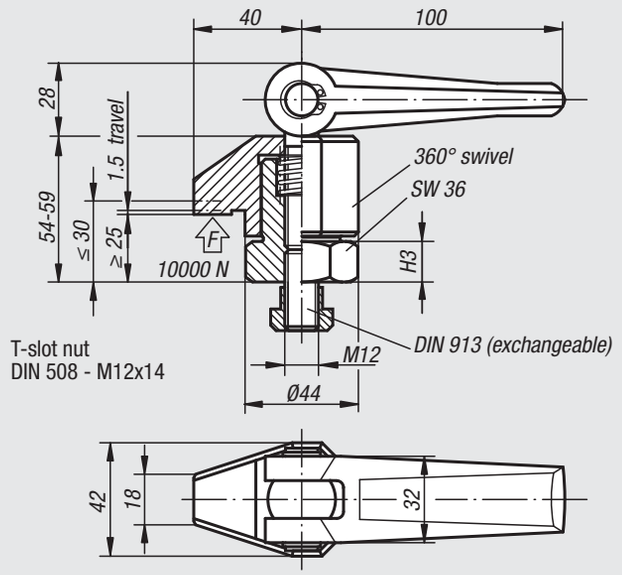

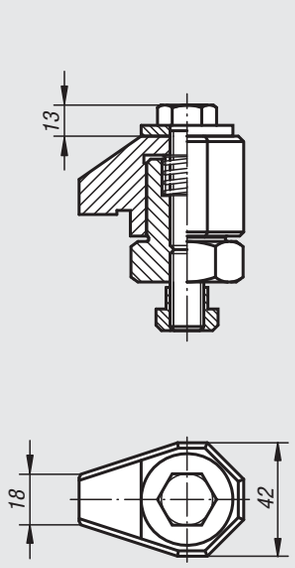

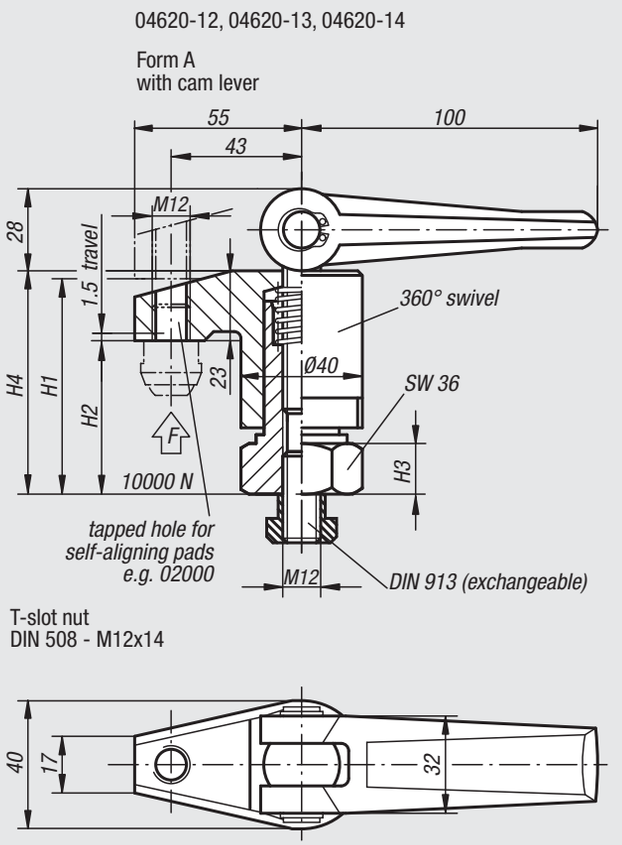

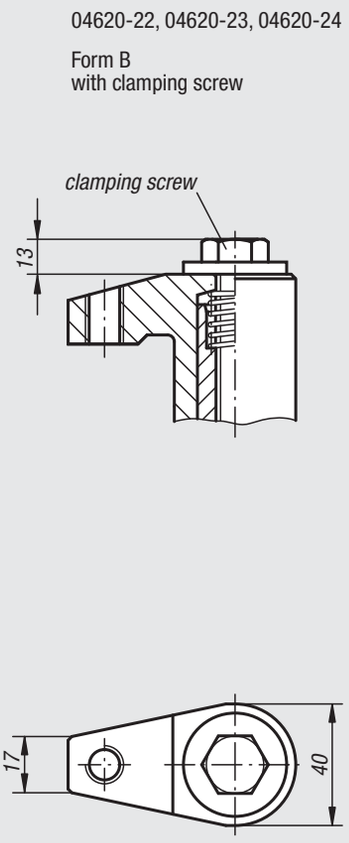

Order No. Form A	Order No. Form B	Clamping height max. H1	Clamping height min. H2	H3	H4
04620-11	**04620-21**	30	25	15	54-59
04620-12	**04620-22**	70	50	15	73-93
04620-13	**04620-23**	98	68	15	91-121
04620-14	**04620-24**	135	95	22	118-158

Compact clamps

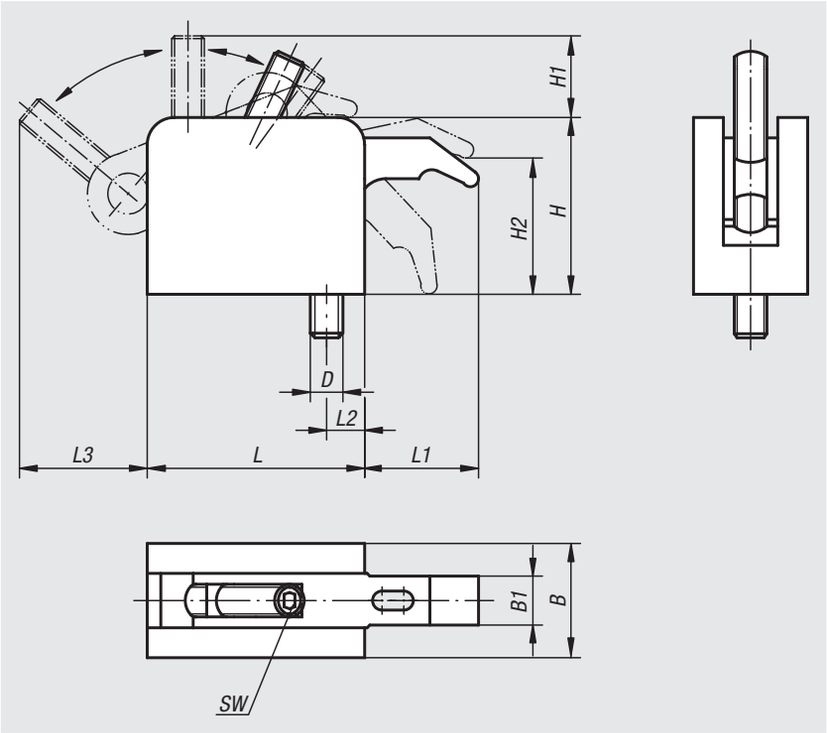

Material:
Housing aluminium.
Clamping lever hardened steel.
Clamping screw grade 10.9.

Version:
Housing bright, clamping lever ground and black oxidised.

Sample order:
nlm 04625-108

Note:
The clamping arm of this compact clamp is fully retractable.
Technical benefits:
- unhindered workpiece changes.
- infinitely variable adjustment.
- high self-locking clamping force.
- variable height assembly (riser blocks see 04626).
- high clamping force without great effort.
- clamp also suitable as stop.

On request:
Longer tightening arm (L1).

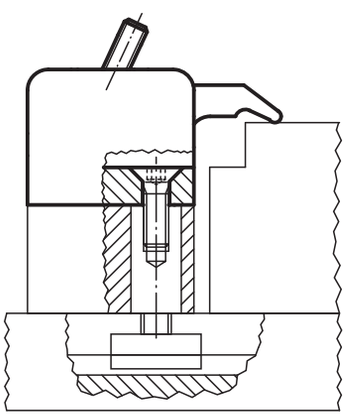

Order No.	Size	L	L1	L2	L3	B	B1	H	H1	H2	D	SW	Clamping force kN
04625-106	1	53	27	11	29	32	11	43	17	30	M6	4	5
04625-108	1	53	27	11	29	32	11	43	17	30	M8	4	5
04625-210	2	80	40	17	45	42	18	65	30	50	M10	6	10
04625-212	2	80	40	17	45	42	18	65	30	50	M12	6	10
04625-312	3	107	53	22	57	53	25	87	32	67	M12	8	15

Riser blocks

with draw bolt

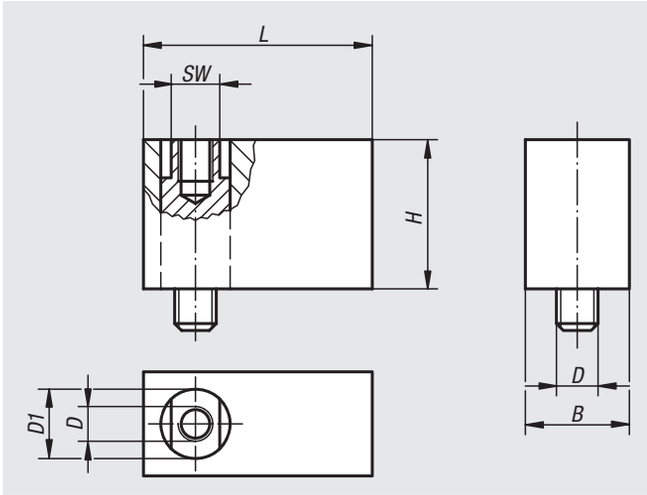

Material:
Riser block aluminium.
Draw bolt steel.

Version:
Riser block bright, draw bolt black oxidised.

Sample order:
nlm 04626-108

Note:
The riser blocks are the height adjustment elements for the compact clamps (04625).

Order No.	Size	L	B	H	D	D1	SW
04626-106	1	53	32	30	M6	15	13
04626-108	1	53	32	30	M8	15	13
04626-210	2	80	42	50	M10	25	19
04626-212	2	80	42	50	M12	25	19
04626-312	3	107	53	70	M12	30	24

Power clamp

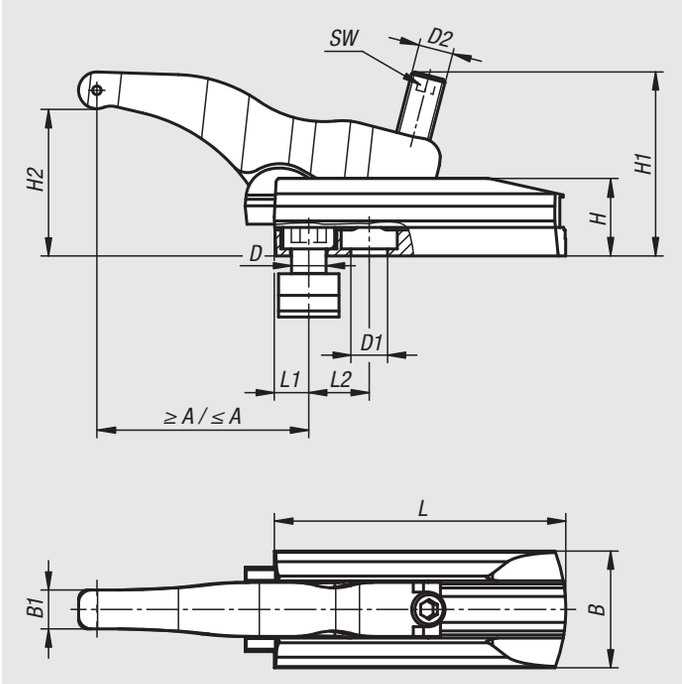

Material:
Carbon steel.

Version:
Forged, black galvanized.

Sample order:
nlm 04629-012135

Note:
We recommend using a lubricating paste to reduce wear to the adjustment screw.
Risers are available to increase the height of the power clamp.

Supplied with clamping element, support element, DIN 508 slot key and grade 12.9 bolt.

Application:
The height of the clamping arm can be infinitely adjusted using the adjustment screw and the workpiece can then be clamped.

Advantages:
- Very high retaining forces of 30–49 kN.
- Low height.
- Simple element assembly.
- Enables very fast, simple clamping.
- Infinitely adjustable height and length.
- Use in 14-28 mm T-slots or M12, M16, M20 grid systems.
- Thrust pad available in smooth and serrated versions.

Accessories:
Riser 04630

Order No.	Version	H2	A min.	A max.	B	B1	Slot width	D	D1	D2	H	H1	L	L1	L2	SW	Clamping force kN
04629-112135	long	6-68	13	110	54	18	14	M12	13	M16	36	85	135	13	25	8	30
04629-116135	long	6-68	16	114	54	18	18	M16	17	M16	36	85	135	16	28	8	30
04629-116155	long	5-80	16	134	60	20	18	M16	17	M20	42	105	155	16	32	10	43
04629-120175	long	7-88	19	165	75	25	22	M20	21	M24	52	125	175	19	36	12	49
04629-212095	short	6-50	12	82	54	18	14	M12	13	M16	36	78	95	12	20	8	32
04629-216110	short	6-50	15	95	60	20	18	M16	17	M20	42	92	110	15	26	10	40

Risers

for power clamp

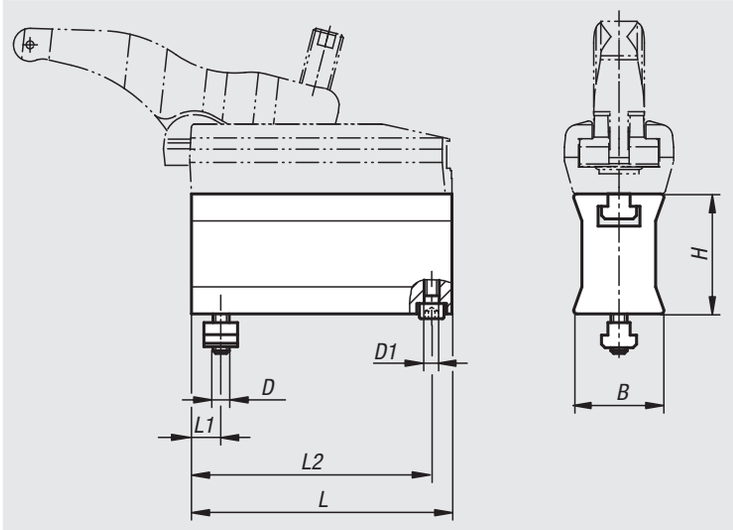

Material:
Carbon steel.

Version:
Forged, black galvanized.

Sample order:
nlm 04630-012060

Application:
The raiser is positioned and fastened to the machine table, the power clamp is then screwed onto the raiser. By turning the adjustment screw on the power clamp, the height of the clamping arm can be infinitely adjusted and the workpiece clamped.

Advantages:
- Other clamping heights can be achieved by mounting multiple risers one on the other.
- Infinite transition between clamping heights.
- Simple element assembly.
- For use in 14-28 mm T-slots or M12, M16, M20 grid systems.

Order No.	Version	Slot width	B	D	D1	H	L	L1	L2	Clamping force kN
04630-012060	long	14	45	M12	M8	60	135	12	127	30
04630-016070	long	18	48	M16	M8	70	155	16	145	43
04630-020080	long	22	58	M20	M10	80	175	19	165	49
04630-112060	short	14	44,5	M12	M8	60	95	12	88	32
04630-116070	short	18	47,5	M16	M8	70	110	16	100	40

Thrust pads

for power clamp

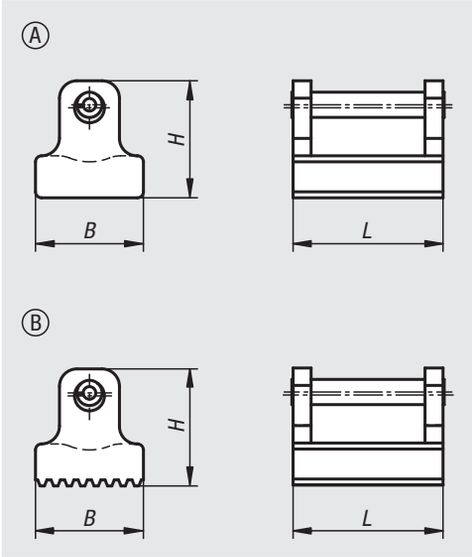

Material:
Stainless steel

Sample order:
nlm 04631-025

Note:
Power clamps can be fitted with serrated or smooth thrust pads.

Order No. Form A smooth	Order No. Form B serrated	B	H	L
04631-025	**04631-125**	18	19,5	25
04631-030	**04631-130**	20	24	30
04631-036	**04631-136**	25	28	36

Clamp nuts

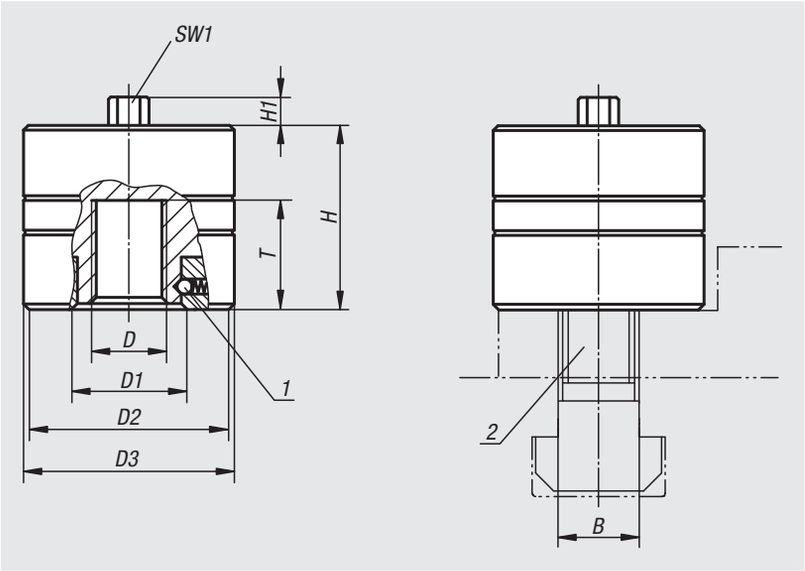

Material:
Housing carbon steel, cover aluminium.

Version:
Carbonitrided

Sample order:
nlm 04750-6012

Note:
The main feature of the mechanical clamp nut is an integrated planetary gear to simplify the manual clamping torque. After manually adjusting the clamp nut up to the workpiece the drive pinion of the planetary gear is engaged by turning the hexagonal spigot "SW1" to the right. The clamp nut is self-locking in every position. The clamp nut can be used for many clamping tasks throughout the machining field, especially for clamping parts in presses and punches.
Suitable bolts for t-slots see 07040.

The clamp nuts are supplied without t-slot bolts.

Drawing reference:
1) ratchet
2) screws for T-slots up to M24, min. grade 10.9

Clamp nut clamping sprockets during milling

Order No.	D	D1	D2	D3	H	H1	T min.	T max.	B	SW1	Clamping force max. kN	max. static load kN	Tightening torque max. Nm
04750-6012	M12	32	60	62	50	10	16	24	14	13	60	70	20
04750-6016	M16	32	60	62	50	10	16	24	18	13	60	120	25
04750-6020	M20	32	60	62	50	10	16	24	22	13	60	120	30
04750-10016	M16	42	71	73	70	10	25	35	18	15	100	130	35
04750-10020	M20	42	71	73	70	10	25	35	22	15	100	200	40
04750-10024	M24	42	71	73	70	10	25	35	28	15	100	200	45

Clamp nuts with star or T-grip

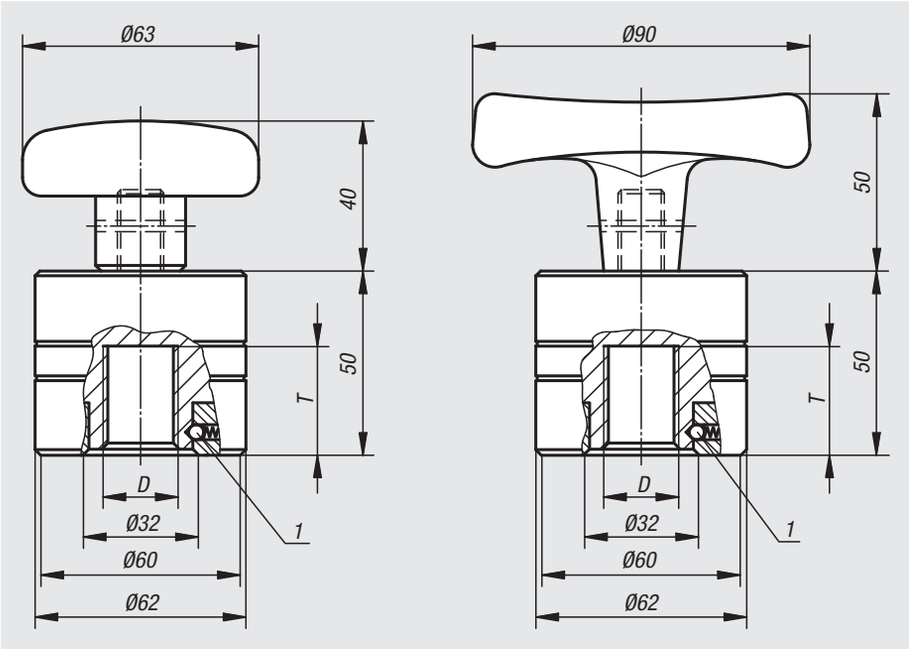

Material:
Housing carbon steel, cover aluminium, star grip thermoplastic, T-grip Duroplast.

Version:
Carbonitrided; star and T-shaped grips: black

Sample order:
nlm 04751-4010

Note:
The clamp nut with star or T-grip are an improvement based on the tried and tested clamp nut 04750. A star or T-grip replaces the operating hexagon and an added indexing mechanism complements it. An integrated planetary gear serves as the force multiplier, the indexing mechanism triggers the automatic switch from the placing movement to the actual application of force. As a result, considerable clamping forces can be achieved with the simplest manual operation, with no additional ring or socket spanner. The robust construction and self-limiting function guarantee a high level of operating safety. Clamp nuts are used far beyond mechanical engineering for purposes in which high tension and clamping forces are required with the least possible expense. Clamp nuts are maintenance-free under normal operating conditions (max. 120 °C).

The threaded bolt must have a minimum grade 10.9. With thread diameters less than M16, bolts grade 12.9 should be used or the maximum admissible static load must be reduced.

Advantages:
- simple, manual operation.
- high tension forces due to force reinforcement.
- rapid adjustment due to automatic conversion.
- high-level operating safety due to self-limitation.

Drawing reference:
1) ratchet

Order No.	Version	D	T min.	T max.	Clamping force max. kN	max. static load kN	Tightening torque max. Nm
04751-4010	with star grip	M10	16	24	40	50	15
04751-4012	with star grip	M12	16	24	40	70	15
04751-4016	with star grip	M16	16	24	40	120	15
04751-4020	with star grip	M20	16	24	40	120	15
04751-40102	with T-grip	M10	16	24	40	50	25
04751-40122	with T-grip	M12	16	24	40	70	25
04751-40162	with T-grip	M16	16	24	40	120	25
04751-40202	with T-grip	M20	16	24	40	120	25

Tightening screws

Material:
Carbon steel.

Version:
Black oxidised.

Sample order:
nlm 04752-48

Note:
These power clamping screws are fitted with a patented wedge mechanism. This system allows the greatest clamping forces to be achieved at low torques with a simple manual operation. The wedge mechanism is self-limiting in every clamping position. A longer path can be quickly traversed via the external thread of the screw before the wedge mechanism (travel up to 2.2 mm) is used for clamping. Tightening screws are used for many purposes, primarily in presses, punches, production machines, fixtures and equipment production.

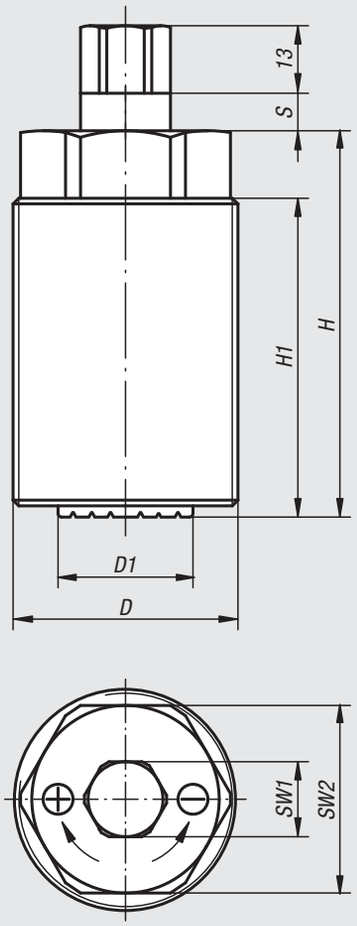

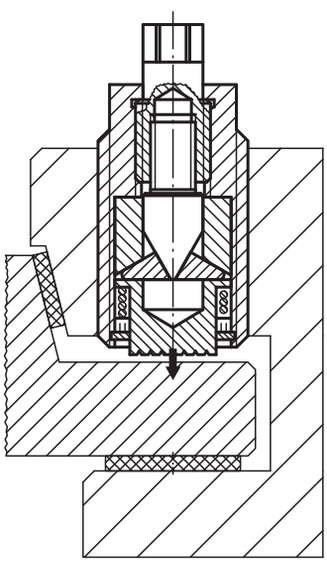

Clamping a turning tool on a large lathe

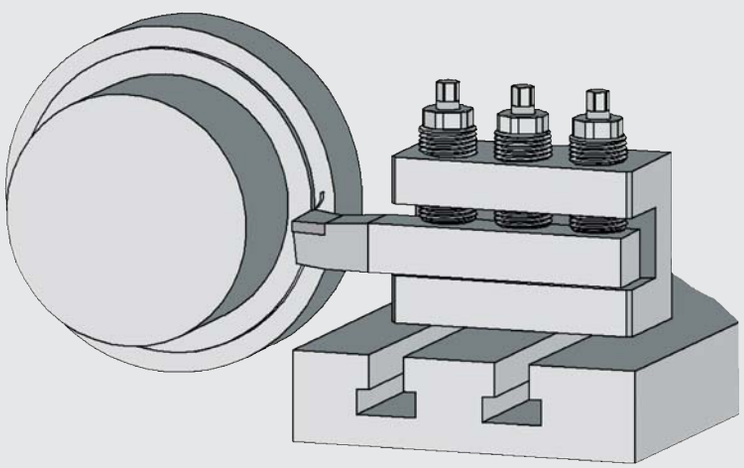

Order No.	D	D1	H	H1	S	SW1	SW2	max. clamping travel	Nominal clamping force kN	max. static load kN	Max. tightening torque at SW1 Nm
04752-36	M36x3	19	73	62	5	13	30	1,5	40	80	45
04752-48	M48x3	28	90	75	7,5	17	41	2,2	80	160	90

Notes

05000

Toggle clamps
Pneumatic clamps
Accessories for clamps
Latches
Quarter-turn locks

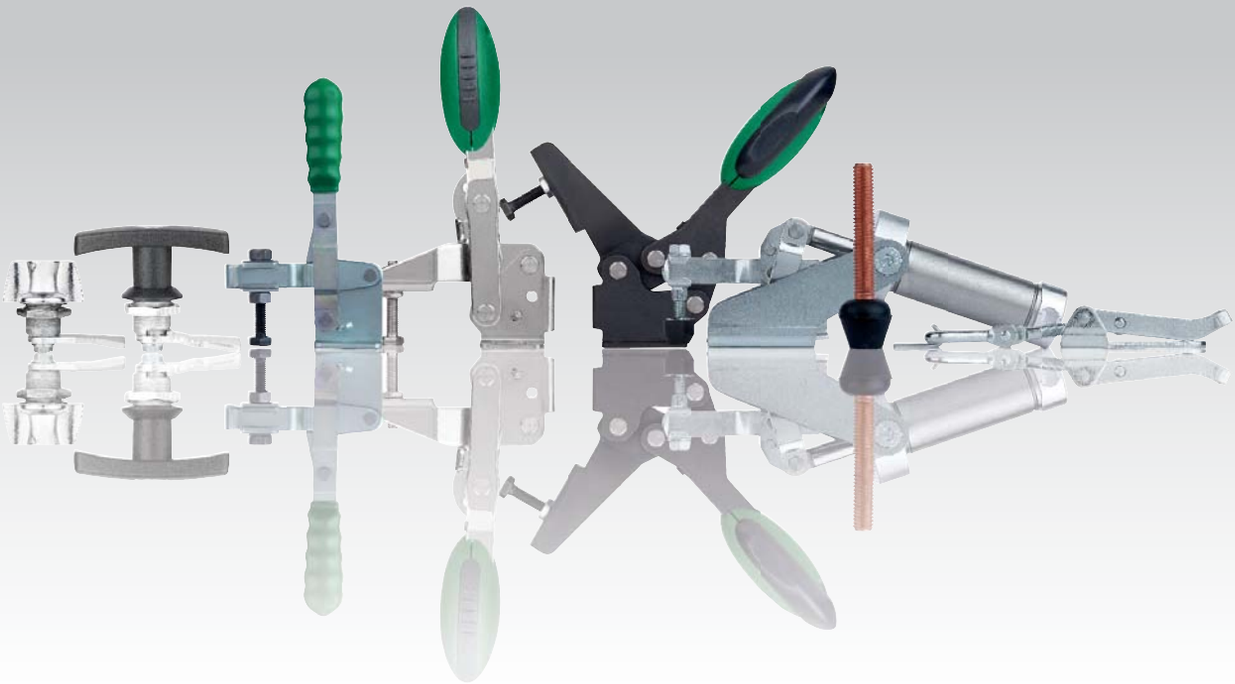

Toggle clamps

Toggle clamps offer effective solutions where quick and economical clamping or positioning is required.

Toggle clamps work according to the knee-lever principle and can be operated with very little expenditure of force.

Self-locking is guaranteed when the dead centre position (alignment of the three joints) is exceeded.

Toggle clamps are an optimal clamping solution in drilling, welding, grinding and inspection fixtures etc. In the timber industry extreme deformations are avoided by using toggle clamps when bonding or assembling fragile sheets as the clamping force is controllable.

Principle of the knee lever

It is generally known that a person can support himself against a wall to shift a heavy piece of furniture. If the person has bent his knees and tries to move the furniture with the force of his legs, this is associated with the expenditure of considerable force.

However, if the person has his legs in the position as shown in the picture above, and presses on the knee joint from above with a force, the move is much easier to achieve.

As soon as the 3 points of the joint A, B and C are in a line (knees straightened), it is no longer possible for the piece of furniture to be pressed back by a counterforce.

This principle is used with the toggle clamps.

Operating method:

1. Position before clamping.
2. Dead centre position (points of the joint in line).
3. By exceeding the dead centre secure clamping is guaranteed (self-locking).

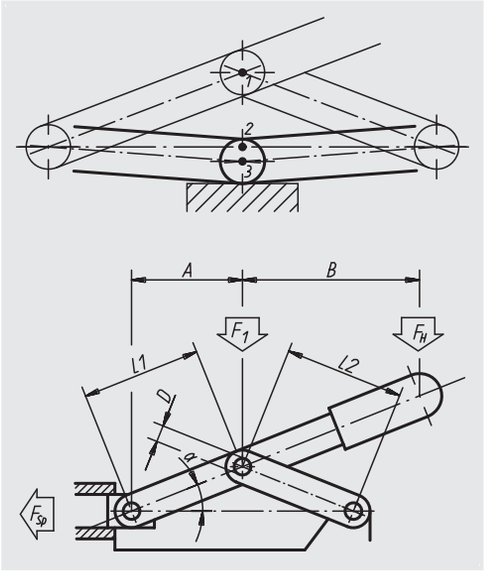

Calculating the clamping force

Calculation variables

A:	Distance between the centres (mm)
B:	Distance to the point of force application (mm)
D:	Diameter of the axle bolt (mm)
FH:	Hand force (N)
F1:	Force on the point of the joint (N)
Fsp:	Clamping force (N)
L1, L2:	Length of the lever arm (mm)
α:	Inclination angle of the lever (degrees)
β:	Friction angle in the joints (degrees)
δ:	Angle of repose at the connecting rod (degrees)
μ:	Coefficient of friction = 0,1 => δ 5,73°

$$F_{sp} = \frac{F_1}{2}\left[\frac{1}{\tan(\alpha+\beta)} - \tan\delta\right];\quad F_1 = \frac{F_H \cdot (A+B)}{A};\quad \beta = \arcsin\left(\frac{2D}{L_1+L_2}\cdot\mu\right)$$

Very high clamping forces can be achieved with toggle clamps. The full potential force cannot be used. Adhering to the retaining forces F recommended in the catalogue guarantees a long life.

The the clamping force must be attuned to the retaining force, which can be done by setting the thrust screw.

Toggle clamps vertical

with horizontal foot

Material:
Steel plate DD11 1.0332.

Version:
Steel parts galvanised.
Hinge pins tempered.
Plastic handle oil-resistant.

Sample order:
nlm 05020-08

Note:
See 05200 – 05280 for accessories.

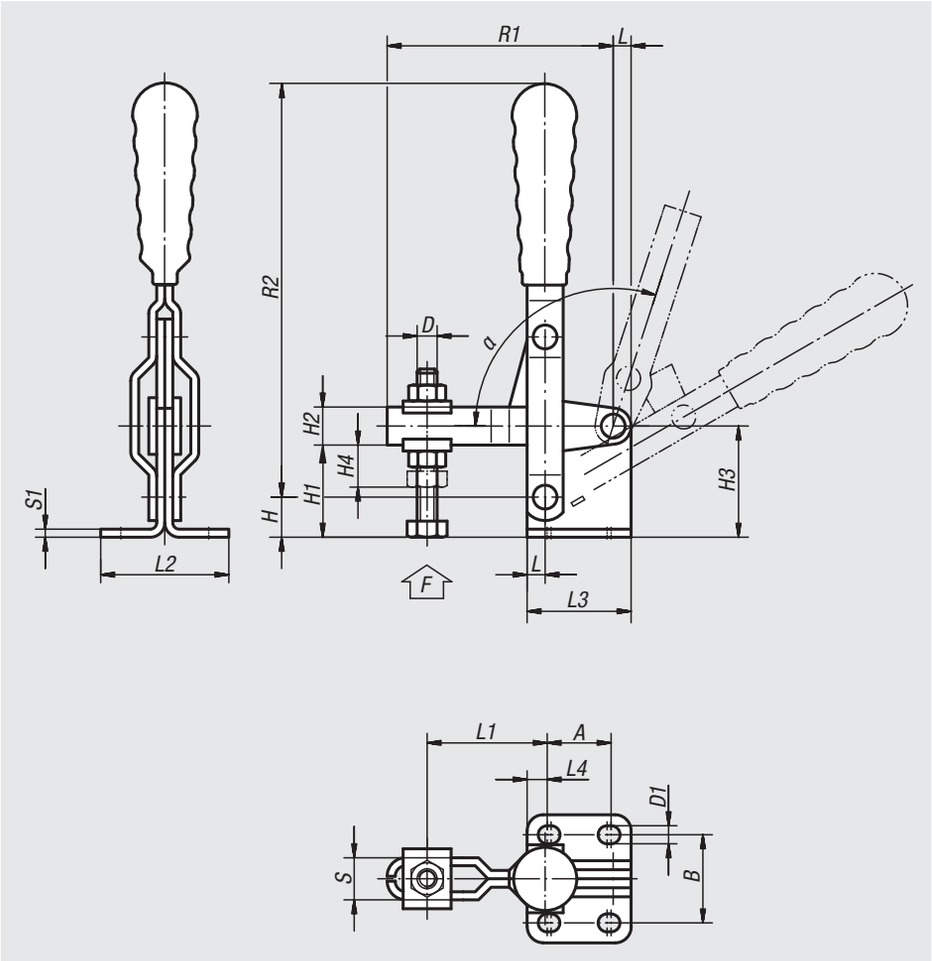

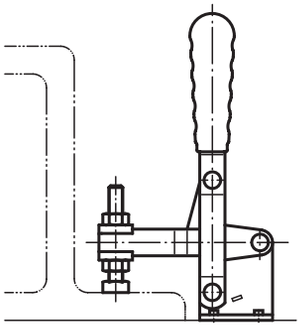

Order No.	L	L1 min.	L1 max.	L2	L3	L4	B	H	H1	H2	H3	H4	A min.	A max.	D	D1	R1	R2	S	S1	F kN	α	Plastic grips
05020-05	4,5	16	35	32	26	5	22	10	23	9,5	28	10	14	16	M5x35	4,5	56,5	96	10,5	2	0,8	108°	05200-100
05020-06	5,5	23	46	38	32	9	27	13	29	11,5	35	11	12	14	M6x50	5,5	70,5	121	13,5	3	1	108°	05200-105
05020-08	7	27	55	45	39	9	32	16	35	14	42	14	19	21	M8x50	6,5	86	143	16	3	2,3	108°	05200-115
05020-10	8	33	74	56	43	7,5	38	20	39	18	48	18	26	28	M10x70	8,5	110	177	18	3,5	3,5	108°	05200-120
05020-12	10	45	100	68	50	9	45	25	45	22	56	21	32	32	M12x80	8,5	140	215	23	4	4	90°	05200-135

Toggle clamps vertical

with horizontal foot and full clamping lever

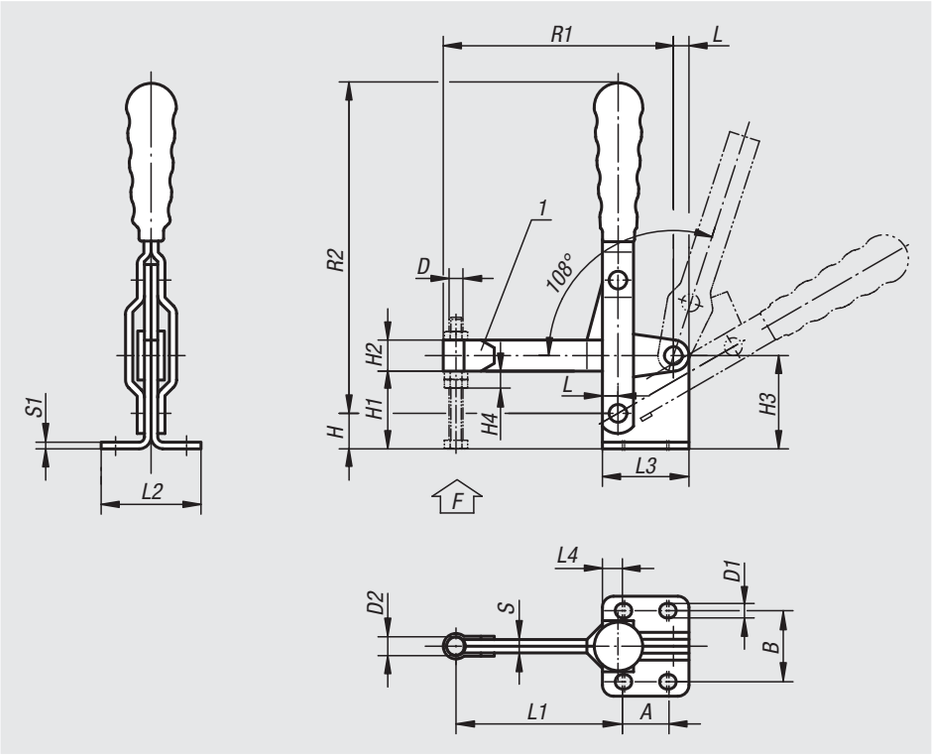

Material:
Steel plate DD11 1.0332.

Version:
Steel parts galvanised.
Hinge pins tempered.
Plastic handle oil-resistant.

Sample order:
nlm 05020-101

Note:
Screws not supplied.
See 05200 – 05280 for accessories.

Drawing reference:
1) Weldable

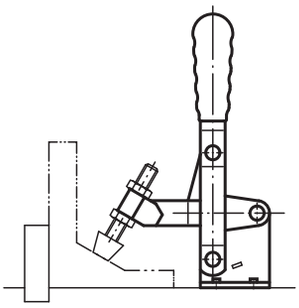

Order No.	L	L1	L2	L3	L4	B	H	H1	H2	H3	H4	A min.	A max.	D	D1	D2	R1	R2	S	S1	F kN	Plastic grips
05020-081	7	75	45	39	9	32	16	35	14	42	12	19	21	M8	6,5	8,5	103	143	6	3	2,2	05200-115
05020-101	8	92	56	43	7,5	38	20	39	18	48	16	26	28	M10	8,5	10,5	125	177	7	3,5	3,4	05200-120
05020-121	10	122	68	50	9	45	25	45	22	56	19	32	32	M12	8,5	12,5	159	215	8	4	4,5	05200-135

Toggle clamps vertical

with horizontal foot, large version

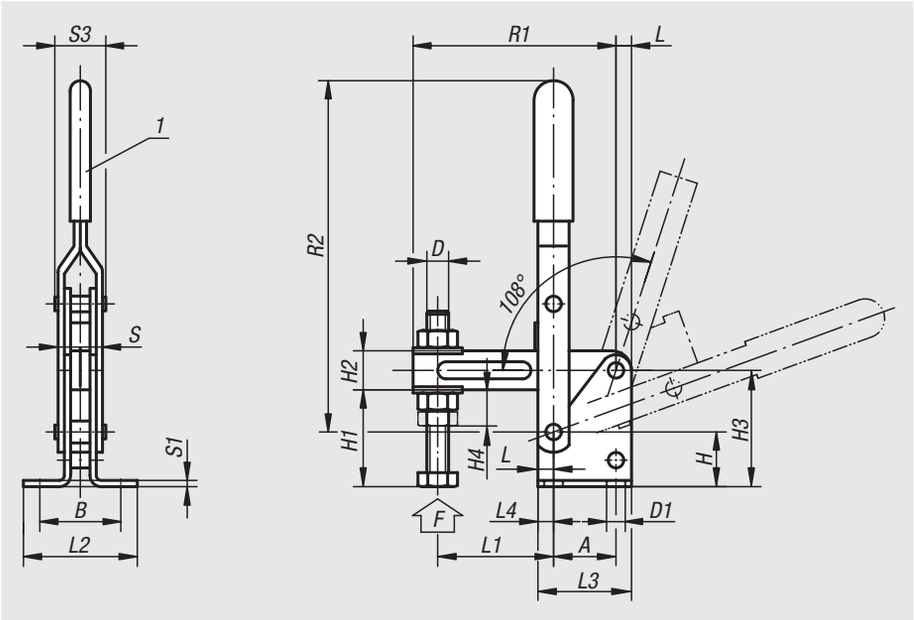

Material:
Steel plate DD11 1.0332.

Version:
Steel parts galvanised.
Hinge pins tempered.
Plastic handle oil-resistant.

Sample order:
nlm 05020-14

Note:
See 05200 – 05280 for accessories.

Drawing reference:
1) plastic grip 05200

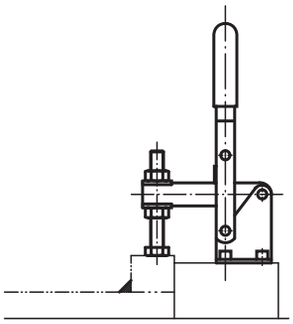

Order No.	L	L1 min.	L1 max.	L2	L3	L4	B	H	H1	H2	H3	H4	A	D	D1	R1	R2	S	S1	S3	F kN	Plastic grips
05020-14	10	50	165	73	60	10	52	35	62,5	25	75	21	40	M14x90	8,5	225	230	30	4	34	4,6	05200-135
05020-16	15	55	215	100	90	20	70	58	101	30	116	27	50	M16x140	12,5	300	305	39	5	44	6	05200-140

Toggle clamps vertical

with straight foot

Material:
Steel plate DD11 1.0332.

Version:
Steel parts galvanised.
Hinge pins tempered.
Plastic handle oil-resistant.

Sample order:
nlm 05040-12

Note:
See 05200 – 05280 for accessories.

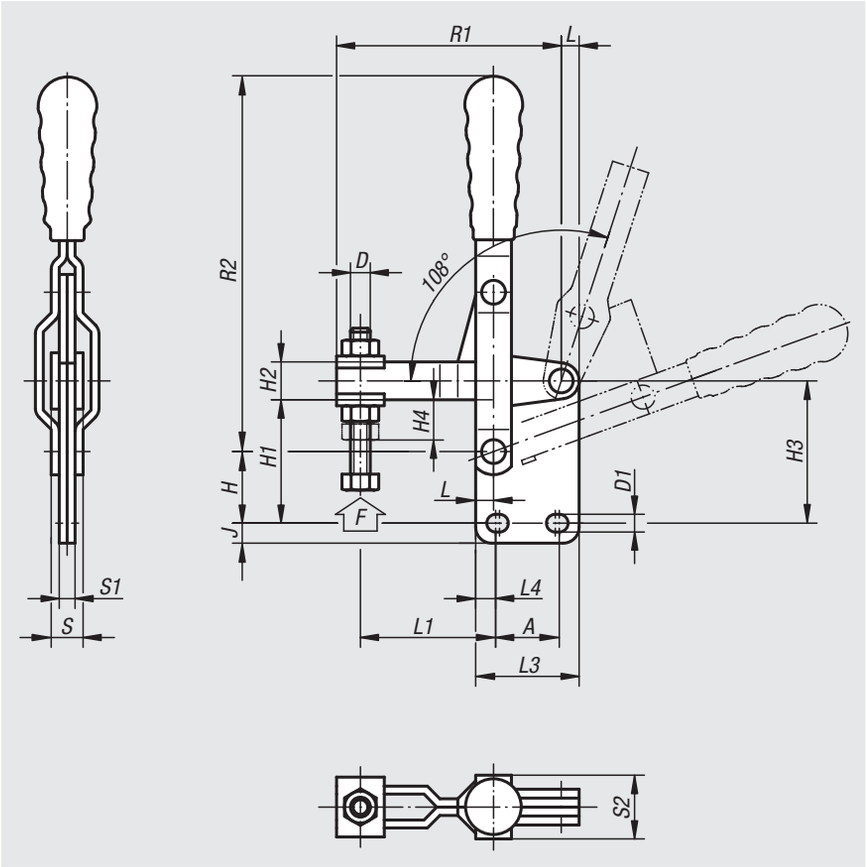

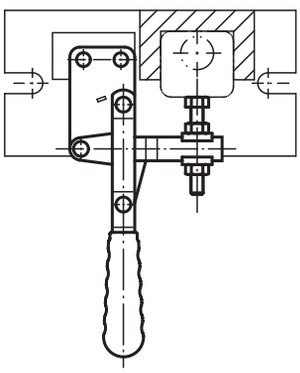

Order No.	L	L1 min.	L1 max.	L3	L4	H	H1	H2	H3	H4	A min.	A max.	D	D1	J	R1	R2	S	S1	S2	F kN	Plastic grips
05040-05	4,5	16	35	26	5	18	31	9,5	36	10	14	16	M5x35	4,5	5	56,5	96	10,5	4	16	0,8	05200-100
05040-06	5,5	23	46	32	9	21	37	11,5	43	11	12	14	M6x50	5,5	5,5	70,5	121	13,5	6	23	1	05200-105
05040-08	7	27	55	39	9	26,5	45,5	14	52,5	14	19	21	M8x50	6,5	6,5	86	143	16	6	23	2,3	05200-115
05040-10	8	33	74	43	7,5	33	52	18	61	18	26	28	M10x70	8,5	9	110	177	18	7	26	3,5	05200-120
05040-12	10	45	100	50	9	41	61	22	72	21	32	32	M12x80	8,5	11,5	140	215	23	8	30	4,6	05200-135

Toggle clamps vertical

with straight foot and full clamping lever

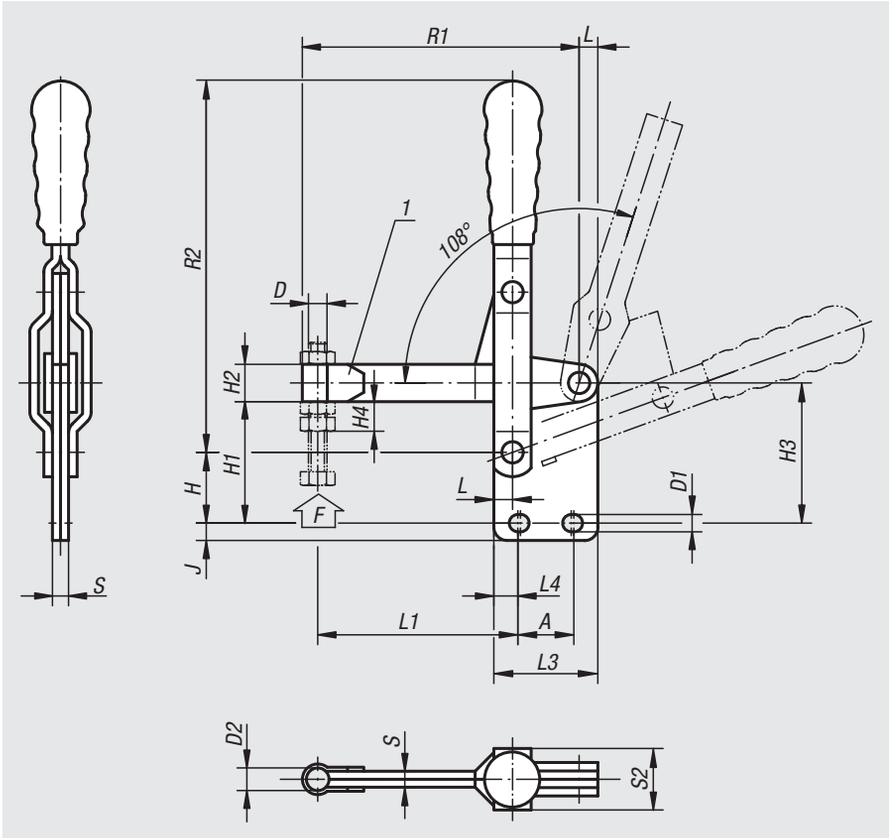

Material:
Steel plate DD11 1.0332.

Version:
Steel parts galvanised.
Hinge pins tempered.
Plastic handle oil-resistant.

Sample order:
nlm 05040-121

Note:
Screws not supplied.
See 05200 – 05280 for accessories.

Drawing reference:
1) Weldable

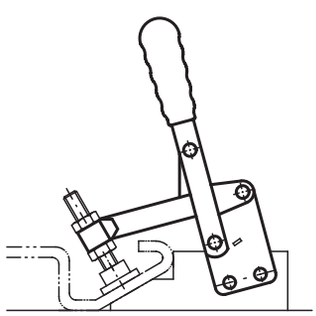

Order No.	L	L1	L3	L4	H	H1	H2	H3	H4	A min.	A max.	D	D1	D2	J	R1	R2	S	S2	F kN	Plastic grips
05040-081	7	75	39	9	26,5	45,5	14	52,5	12	19	21	M8	7	8,5	6,5	103	143	6	23	2,2	05200-115
05040-101	8	92	43	7,5	33	52	18	61	16	26	28	M10	8,5	10,5	9	125	177	7	26	3,4	05200-120
05040-121	10	122	50	9	41	61	22	72	19	32	32	M12	8,5	12,5	11,5	159	215	8	30	4,5	05200-135

Toggle clamps vertical

with angled foot

Material:
Steel plate DD11 1.0332.

Version:
Steel parts galvanised.
Hinge pins tempered.
Plastic handle oil-resistant.

Sample order:
nlm 05060-06

Note:
See 05200 – 05280 for accessories.

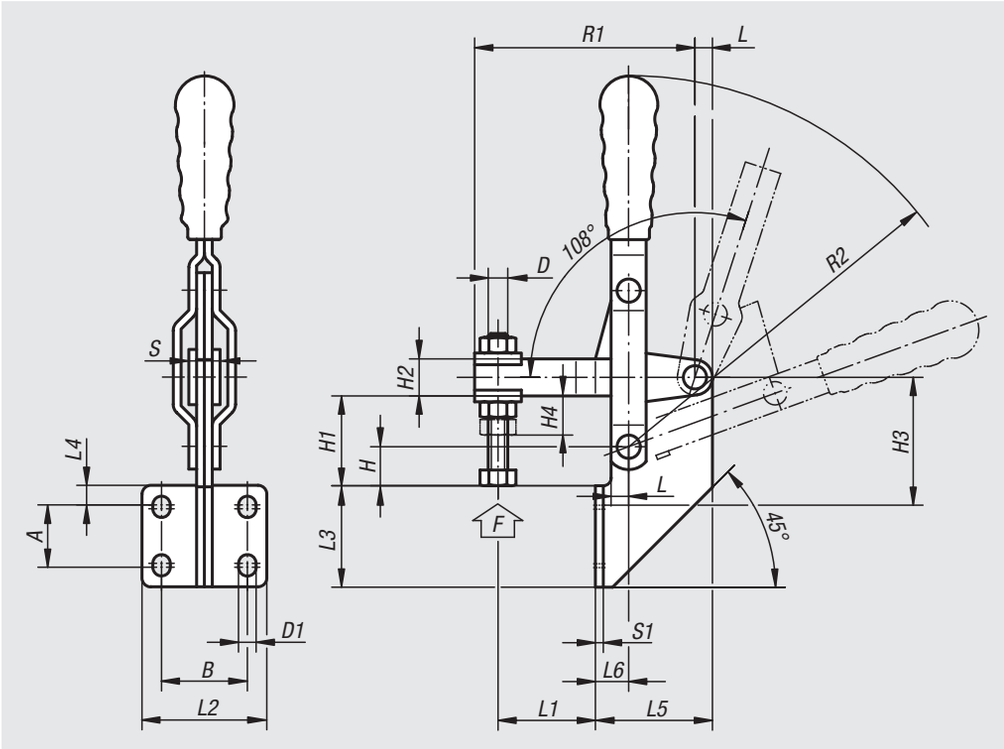

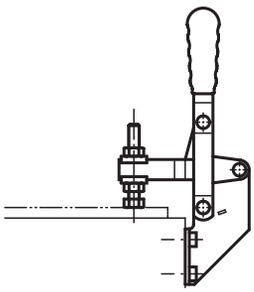

Order No.	L	L1 min.	L1 max.	L2	L3	L4	L5	L6	B	H	H1	H2	H3	H4	A min.	A max.	D	D1	R1	R2	S	S1	F kN	Plastic grips
05060-05	4,5	7	26	32	26	5	30	8,5	22	10	23	9,5	33	10	14	16	M5x35	4,5	56,5	96	10,5	2	0,8	05200-100
05060-06	5,5	8	31	38	32	9	38	11,5	27	13	29	11,5	44	11	12	14	M6x50	5,5	70,5	121	13,5	3	1	05200-105
05060-08	7	12	40	45	39	9	45	13	32	16	35	14	51	14	19	21	M8x50	6,5	86	151	16	3	2,3	05200-115
05060-10	8	18,5	59,5	56	43	7,5	50	15	38	20	39	18	55,5	18	26	28	M10x70	8,5	110	177	18	3,5	3,5	05200-120

Toggle hook clamps

and catch plate

Material:
Lever, foot and catch plate steel plate DD11 1.0332.
Hinge pins and hook carbon steel 1.0501.

Version:
Steel parts galvanised.
Hinge pins and hook tempered.
Grip plastic, oil-resistant.

Sample order:
nlm 05080-01 (hook clamp)
nlm 05080-011 (catch plate)

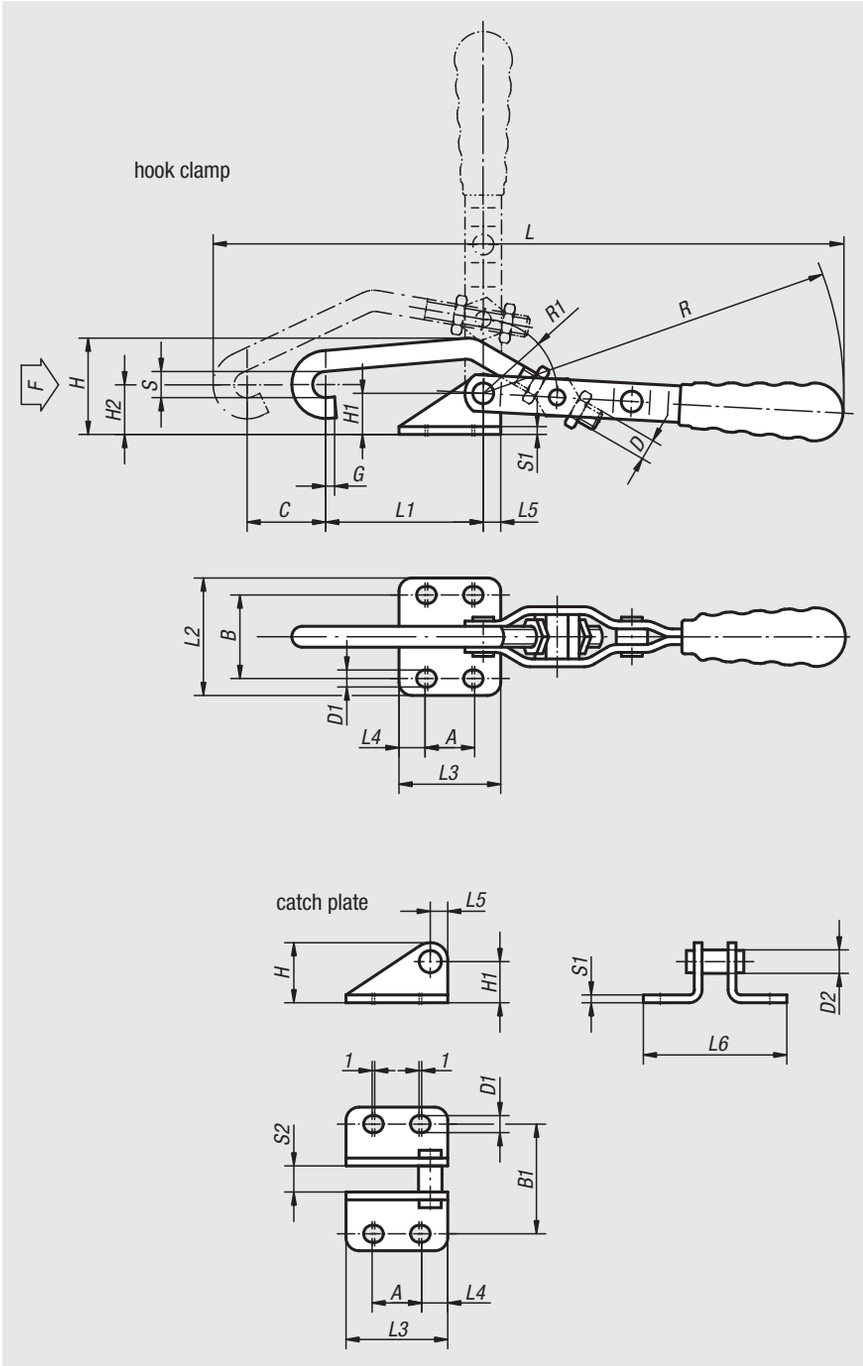

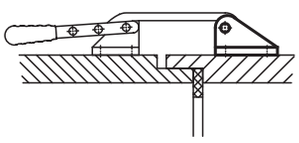

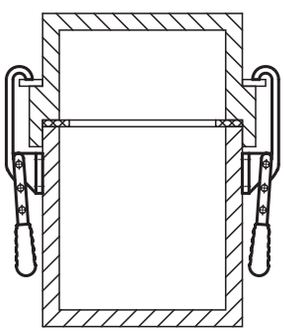

Toggle hook clamps

Order No.	L	L1	L2	L3	L4	L5	B	H	H1	H2	A min.	A max.	C	D	D1	G	R	R1	S	S1	F kN	Plastic grips
05080-01	231	60	45	39	10	7	32	36	16	17	17	19	25	M8	6,5	3	151	29	10	3	1	05200-115
05080-03	349	90	68	50	9	10	45	64	30	31	30	32	30	M12	8,5	5	215	36,5	14	4	3	05200-135

Catch plate

Order No.	L3	L4	L5	L6	B1	H	H1	A min.	A max.	D1	D2	S1	S2
05080-011	39	10	7	55	42	23	16	17	19	6,5	9	3	10
05080-031	50	9	10	82	59	40	30	30	32	8,5	13	4	14

Toggle clamps horizontal

with horizontal foot

Material:
Steel plate DD11 1.0332.

Version:
Steel parts galvanised.
Hinge pins tempered.
Plastic handle oil-resistant.

Sample order:
nlm 05120-10

Note:
See 05200 – 05280 for accessories.

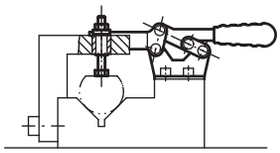

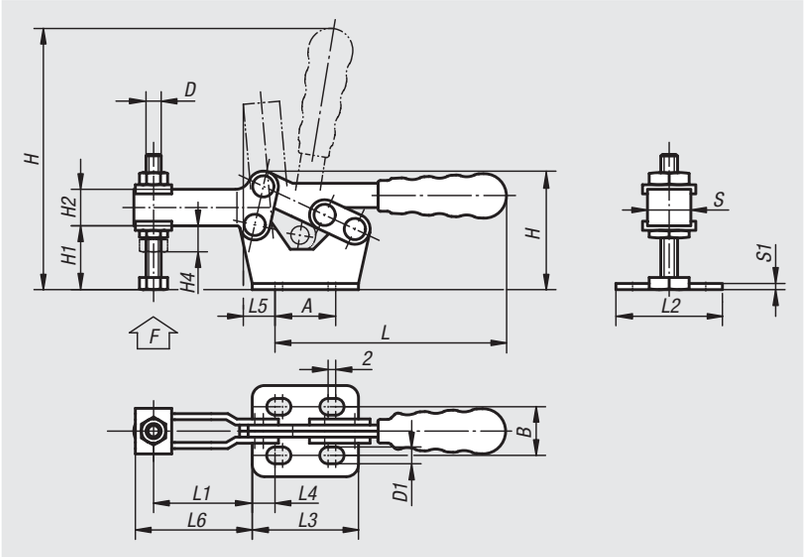

Order No.	L	L1 min.	L1 max.	L2	L3	L4	L5	L6	B	H min.	H max.	H1	H2	H4	A min.	A max.	D	D1	S	S1	F kN	Plastic grips
05120-05	76	12	32,5	30	35	7,5	9,5	39	16	39	91	20	12	10	16	20	M5x35	5,5	11	2	0,8	05200-200
05120-06	106	15,5	46	35,5	45	8,5	11,5	53,5	22	53	130	30	14	11	24	28	M6x48	5,5	14	3	1	05200-205
05120-08	140	19,5	61	40,5	55,5	14	19	71	24	67	165	40	16	14	24	28	M8x60	7	16	3	2,3	05200-210
05120-10	172	33	84	61	65,5	10,5	20	92	42	85	200	50	20	18	40	44	M10x70	9	19	3,5	3,5	05200-215
05120-12	215	31	104	64,5	80	18,5	25,5	119	42	99	250	60	24	21	40	44	M12x80	9	22	4	4,6	05200-220

05120

Toggle clamps horizontal

large version

Material:
Steel plate DD11 1.0332.

Version:
Steel parts galvanised.
Hinge pins tempered.
Plastic handle oil-resistant.

Sample order:
nlm 05120-14

Note:
See 05200 – 05280 for accessories.

Drawing reference:
1) plastic grip 05200

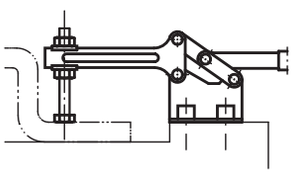

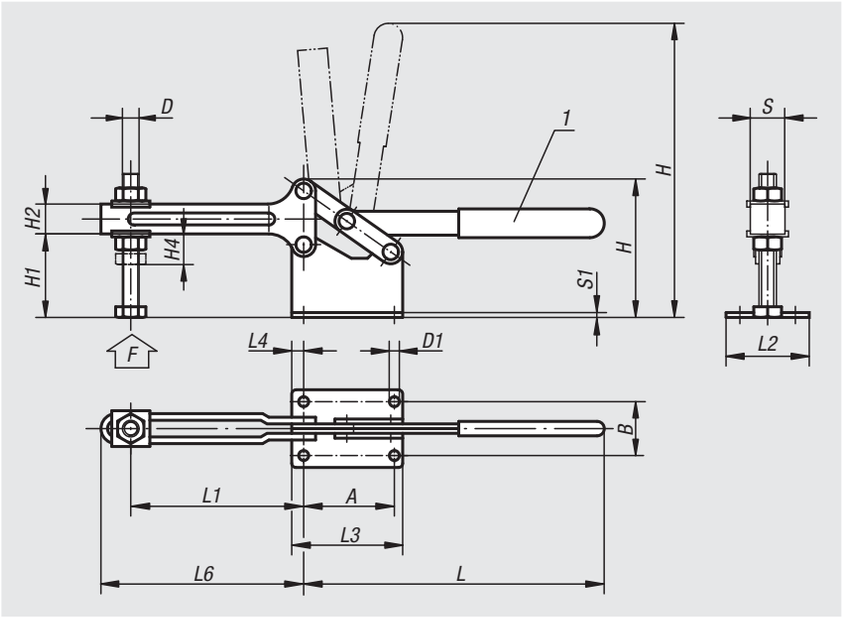

Order No.	L	L1 max.	L1 min.	L2	L3	L4	L6	B	H min.	H max.	H1	H2	H4	A	D	D1	S	S1	F kN	Plastic grips
05120-14	252	145	45	65	96	10	160	45	116	310	70	25	21	76	M14x90	9	24	4	4,5	05200-145
05120-16	325	205	55	85	132	15	225	55	173	425	110,5	35	27	102	M16x140	12,5	39	5	6	05200-140

Toggle clamps horizontal

with straight foot

Material:
Steel plate DD11 1.0332.

Version:
Steel parts galvanised.
Hinge pins tempered.
Plastic handle oil-resistant.

Sample order:
nlm 05130-08

Note:
See 05200 – 05280 for accessories.

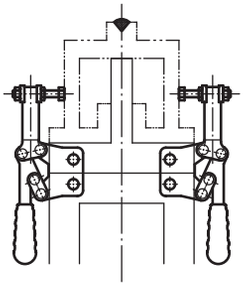

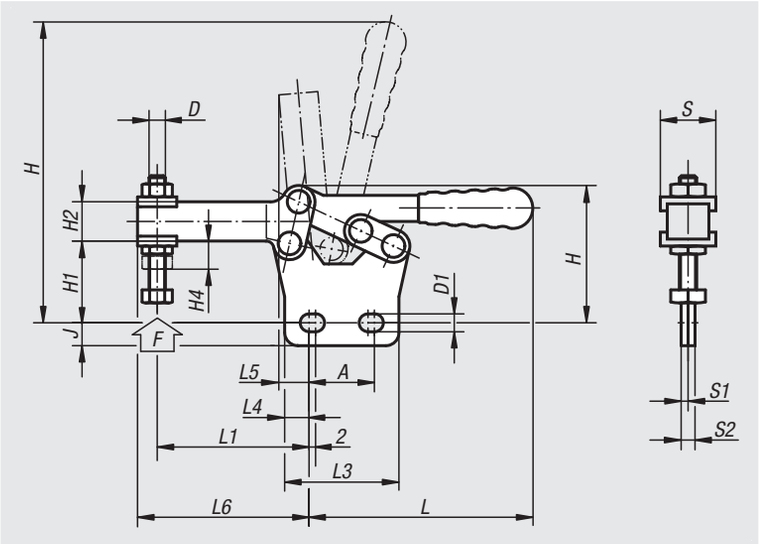

Order No.	L	L1 min.	L1 max.	L3	L4	L5	L6	H min.	H max.	H1	H2	H4	A min.	A max.	D	D1	J	S	S1	S2	F kN	Plastic grips
05130-05	76	18	39	35	7,5	9,5	44	42	87	24	12	9	16	20	M5x35	6	7	14	2	4	0,8	05200-200
05130-06	106	26	51	45	8,5	11,5	60	58	124	36	14	10,5	24	28	M6x48	6	6,5	17	3	6	1	05200-205
05130-08	140	34	74	55	13,5	19	82	74	154	46,5	16	14	24	28	M8x60	7	8	20	3	6	2,3	05200-210
05130-10	172,5	40	90	65	10,5	20	100	96	205	65	20	16,5	40	44	M10x70	9	9	23	3,5	7	3,5	05200-215
05130-12	215	54	113	80	18	25,5	130	112	260	73	24	19	40	44	M12x80	9	12	26	4	8	4,6	05200-220

Toggle mini clamps

Material:
Stainless steel

Version:
Bright.
Grip with oil-resistant plastic sleeve.

Sample order:
nlm 05140-01

Note:
The handle lies horizontal when clamped.

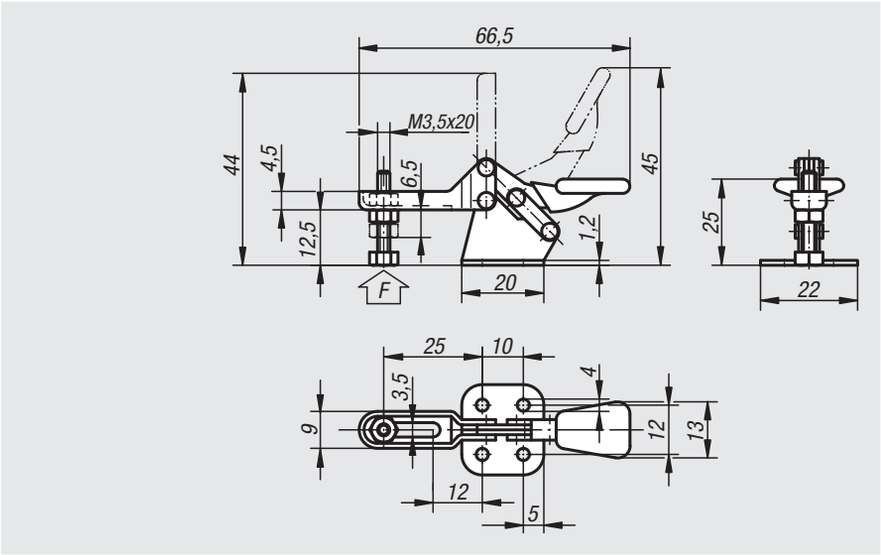

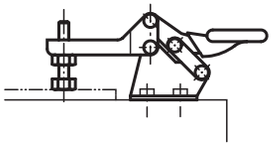

Order No.	F N
05140-01	250

Application: welding fixture with norelem toggle clamps

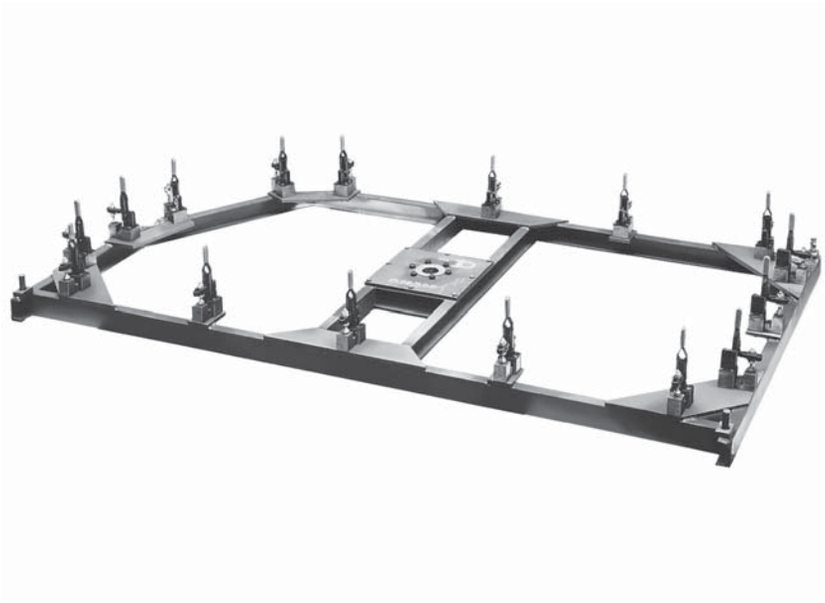

05160

Toggle clamps horizontal

with push rod

Material:
Steel plate DD11 1.0332.

Version:
Steel parts galvanised.
Hinge pins tempered.
Plastic handle oil-resistant.

Sample order:
nlm 05160-10

Note:
The 05160-06 and 05160-08 versions have a swan-necked clamping lever.
See 05200 – 05280 for accessories.

Drawing reference:
1) plastic grip 05200

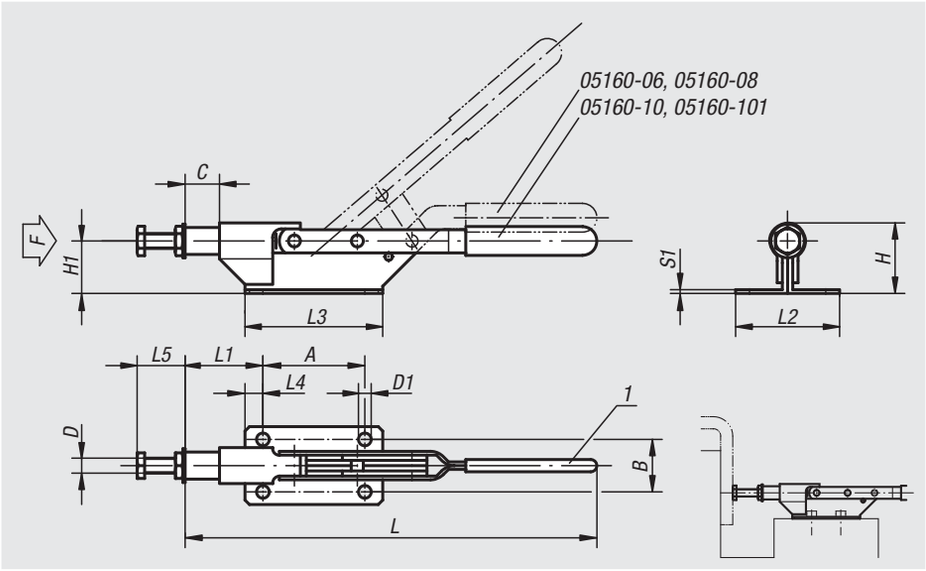

Order No.	L	L1	L2	L3	L4	L5 min.	L5 max.	B	H	H1	A	C (travel)	D	D1	S1	F kN	Plastic grips
05160-06	178	40	40	75	10	13	23	28	33	26,2	55	15	M6	6	2	1	05200-110
05160-08	255	49	45	85	12,5	14	26	30	42	31,5	60	22	M8	6,5	2,5	2	05200-125
05160-10	275	52	52	92	12	25	35	35	47	35,5	68	22	M10	8,5	2,5	3	05200-125
05160-101	300	62	58	100	12,5	25	36	40	59	50	75	26	M10	9	3	4	05200-135

Toggle clamps with push rod

push-pull operation, for bracket mounting

Material:
Body and push-rod 1.0501 carbon steel.
Lever parts steel plate DD11 1.0332.

Version:
Body and lever parts galvanised.
Hinge pins tempered.
Plastic handle oil-resistant.

Sample order:
nlm 05170-012 (toggle clamp)
nlm 05170-110 (bracket)

Note:
The clamp can be mounted with a bracket or into fixtures using the front screw.

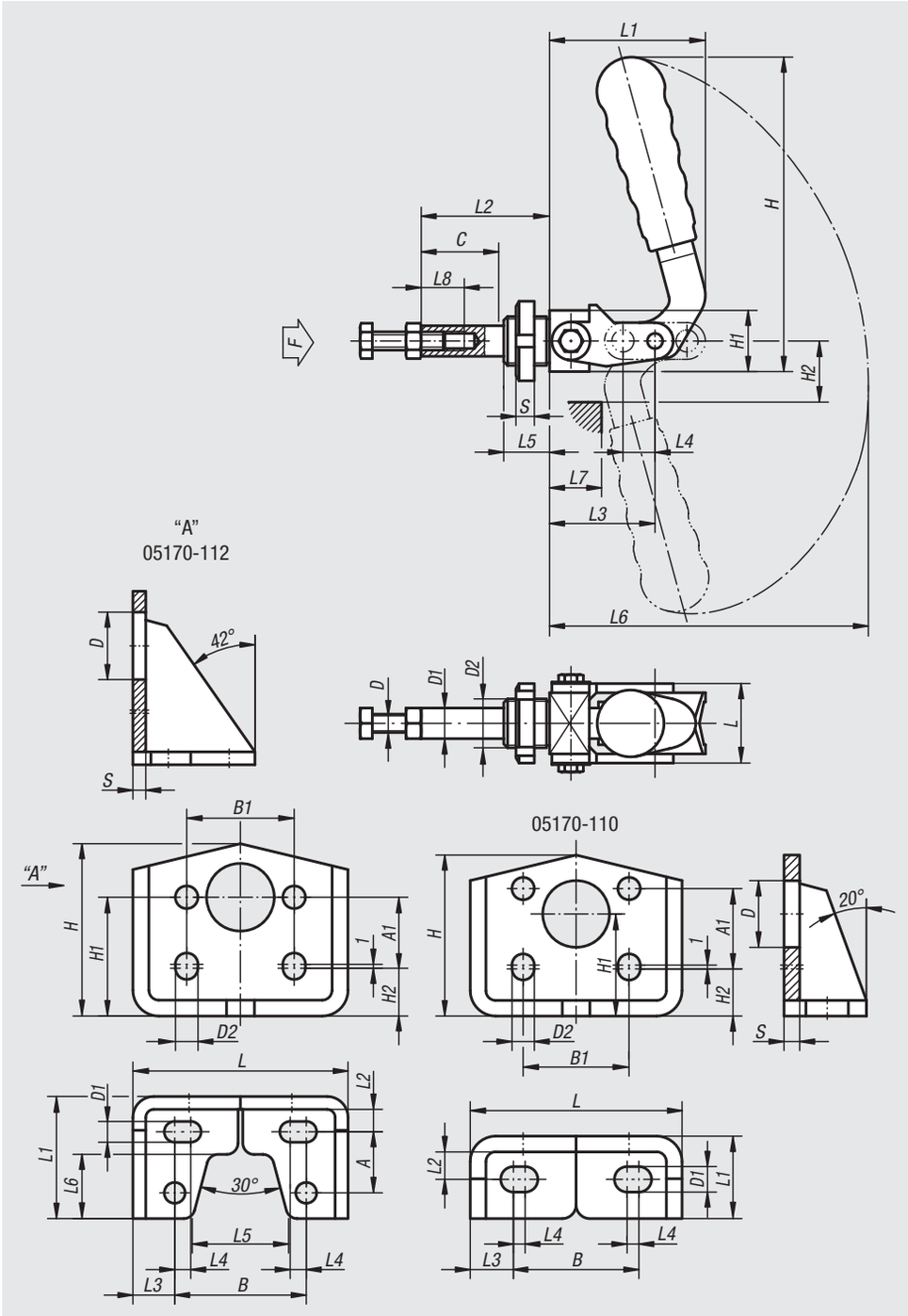

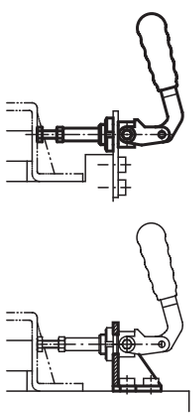

Toggle clamps

Order No.	L	L1	L2	L3	L4	L5	L6	L7	L8	H	H1	H2	D	D1	D2	C (travel)	S	F kN	Plastic grips
05170-010	26	52	42	34	13	15	130	18	20	101	20	20	M6x30	10	M16x1,5	26	6	1	05200-205
05170-012	32	75	60	50	20	18	170	30	30	139	25	28	M8x40	12	M20x1,5	40	8	1,5	05200-120
05170-016	40	105	92	78	35	20	213	60	35	155	32	44	M10x50	16	M27x1,5	70	8	3,5	05200-135

Bracket

Order No.	L	L1	L2	L3	L4	L5	L6	B	B1	H	H1	H2	A	A1	D	D1	D2	S	matching toggle clamp
05170-110	54	21	7	11	3	-	-	32	27	42,5	26	14	-	14	17	6,5	5,5	4	05170-010
05170-112	67	38	7	13	5	30	20	41	32	55	37	16	19	21	21	6,5	6,5	4	05170-012

05200

Plastic grips

Material:
Plastic

Version:
Oil-resistant

Sample order:
nlm 05200-130 (with boss)
05200-210 (without boss)

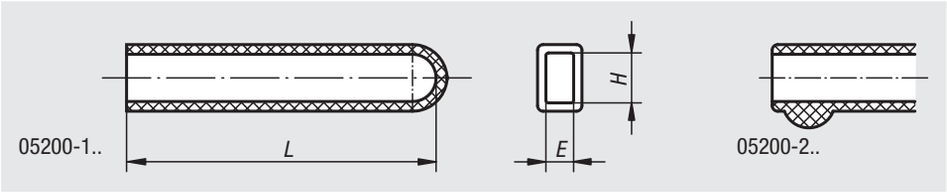

Order No.	L	H	E
05200-100	33	9	4
05200-105	43	11	6
05200-110	55	12	5
05200-115	55	14	6
05200-120	75	16	7
05200-125	90	16	4
05200-130	85	19	6
05200-135	90	20	8
05200-140	115	30	9
05200-145	120	20	8
05200-200	33	8	4
05200-205	48	12	6
05200-210	65	14	6
05200-215	90	16	7
05200-220	120	20	8

05220

Thrust spindles spring mounted

Material:
Screw and clamping plates steel.
Nut steel.
Spring class C spring wire.

Version:
Screw and clamping plates galvanized.
Nut black oxidised.

Sample order:
nlm 05220-10

Note:
For use with 05020, 05040, 05060, 05120 and 05130.

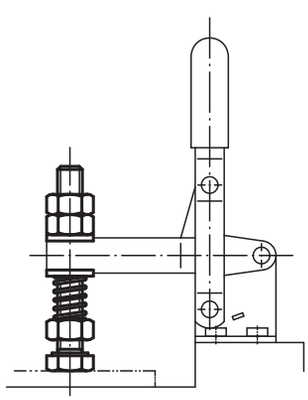

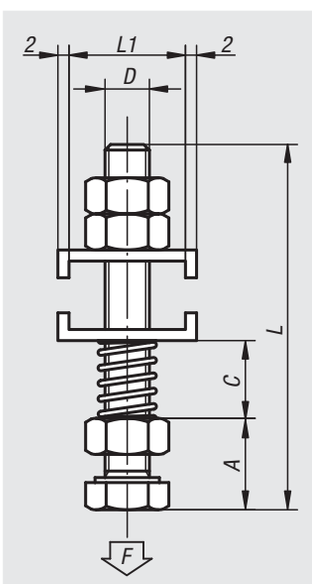

Order No.	L	L1	D	A	C min.	C max.	F max. N
05220-08	65,5	16	M8x60	12	9	30	25
05220-10	87,5	20,5	M10x80	15	14	35	35

Thrust screws

with thrust pad

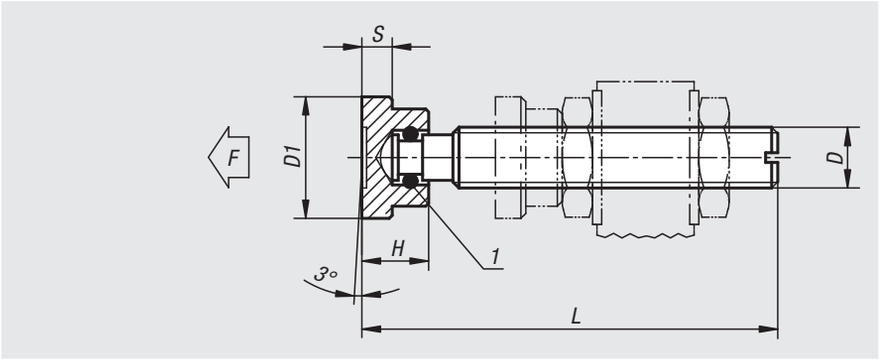

Material:
Screw and thrust pad steel.

Version:
Screw black.
Thrust pad black oxidised.
Screw pin and thrust pad case-hardened.

Sample order:
nlm 05240-10X63

Drawing reference:
1) snap ring

Order No.	L	H	D	D1	S	F max. kN
05240-06X	32/37/42/52	7	M6	12	2,5	1
05240-08X	38/43/48/53/63	9	M8	16	4	2,3
05240-10X	53,5/58,5/63,5/68,5/83,5	11	M10	20	5	3,5
05240-12X	64,5/69,5/74,5/84,5/104,5	13	M12	25	6	4,6
05240-16X	70,3/75,3/85,3/105,3/130,3	15	M16	32	7	6

Thrust screws

with thrust pad

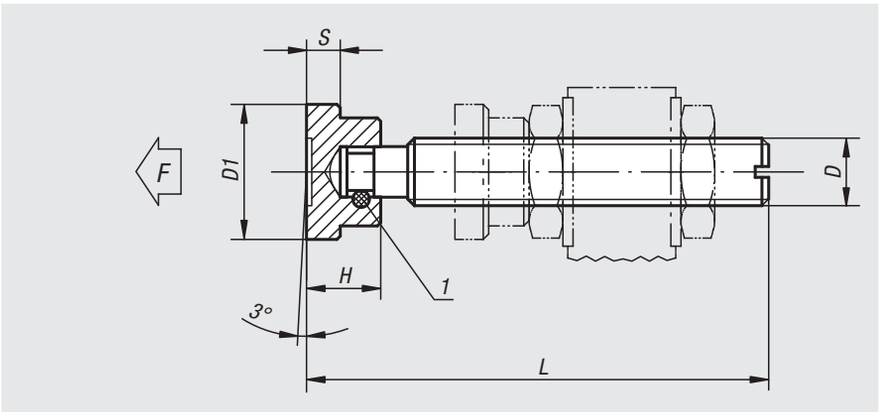

Material:
Screw and thrust pad steel.

Version:
Screw black.
Thrust pad black oxidised.
Screw pin and thrust pad case-hardened.

Sample order:
nlm 05241-10X84

Drawing reference:
1) retaining pin

Order No.	L	H	D	D1	S	F max. kN
05241-06X52	52	7	M6	12	2,5	1
05241-08X63	63	9	M8	16	4	2,3
05241-10X84	84	11	M10	20	5	3,5
05241-12X104	104	13	M12	25	6	4,6
05241-14X105	105	14	M14	28	6	5
05241-16X130	130	15	M16	32	7	6

05260

Thrust screws neoprene

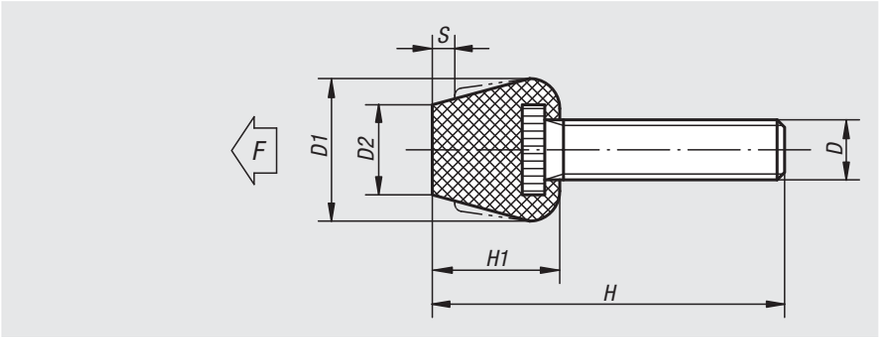

Material:
Screw steel.
Thrust pad neoprene.

Version:
Neoprene pad moulded onto screw end.
Screw copper-plated.

Sample order:
nlm 05260-08

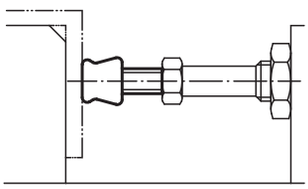

Order No.	H	H1	D	D1	D2	S max.	F max. N
05260-08	63	17	M8 x 46	19	12	3	750
05260-081	43	17	M8 x 26	19	12	3	750
05260-10	80	19	M10 x 61	19	14	3,5	1000
05260-101	55	19	M10 x 36	19	14	3,5	1000

05280

Protective caps

05280-01 - 05280-05
05280-07

05280-06

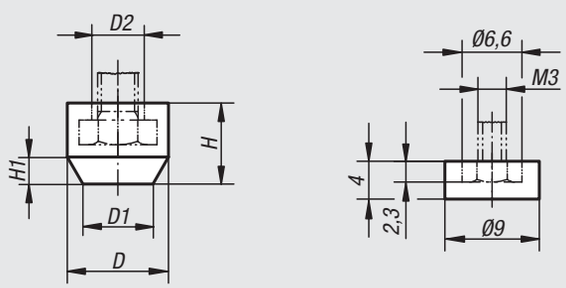

Material:
05280-01 to -05 and 05280-07 oil-resistant rubber.
05280-06 polyamide.

Version:
Rubber black.
Polyamide white.

Sample order:
nlm 05280-03

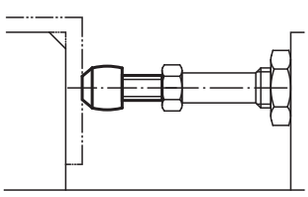

Order No.	D	D1	D2	H	H1	for screws
05280-06	-	-	-	-	-	M3
05280-01	11	7	5,5	8,5	4	M4
05280-02	12,5	8	6,8	10	4	M5
05280-03	15	10	8,5	12	4	M6
05280-04	19	13	11,3	15	6	M8
05280-07	23	15	14,5	18	7	M10
05280-05	26	19	16,5	20	7	M12

Toggle clamps variable horizontal

with horizontal foot

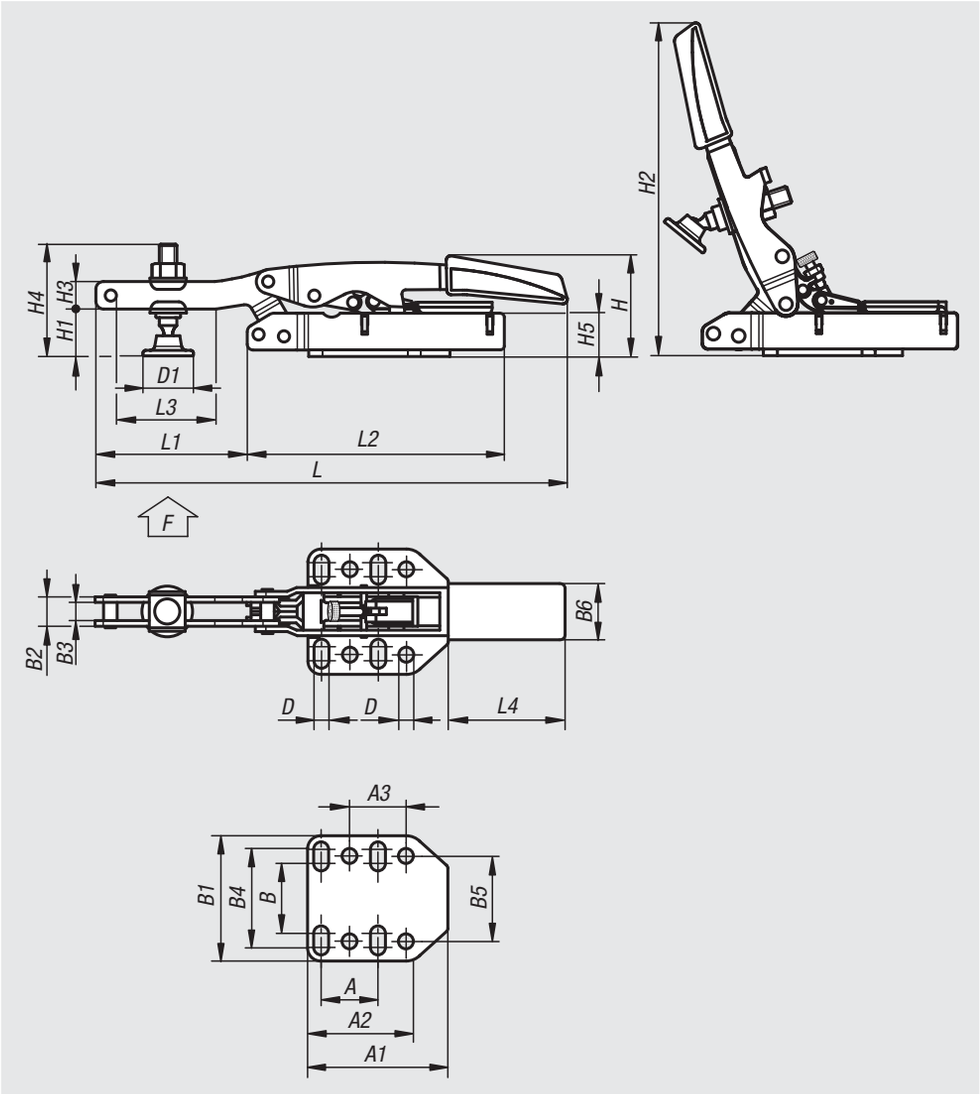

Material:
Steel.
Grip element made of 2-component plastic.

Version:
Tempered and galvanized.
Grip element oil-resistant.

Sample order:
nlm 05300-040

Note:
The toggle clamp adjusts automatically to the height of the workpiece. Infinitely adjustable clamping height within 35 mm with approximately constant clamping force without manual adjustment of thrust screw position.
The clamping force can be adjusted up to 2.500 N according to requirements using a set screw under the lever in the hinge.
The hole pattern in the baseplate is suitable for millimetres and inches.

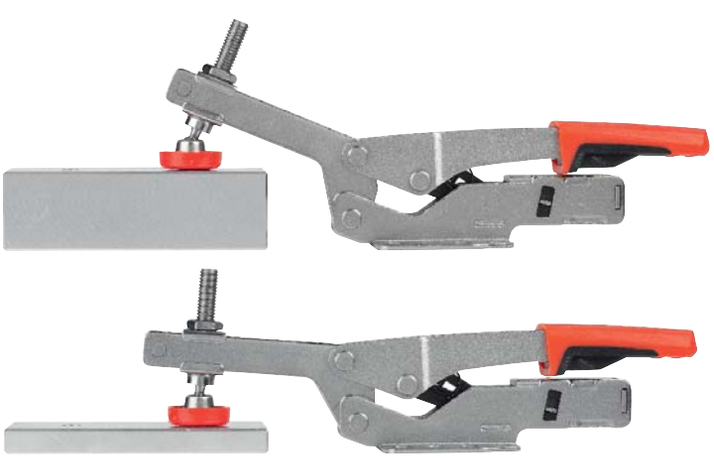

Order No.	A	A1	A2	A3	B	B1	B2	B3	B4	B5	B6	D	D1	H	H1	H2	H3	H4	H5	L	L1	L2	L3	L4	max. clamping height	F kN
05300-040	25,4	53	38	25,4	33	60	13	8	48	38	32	6,5	24,5	47	20	158	14	60	27	217	77	113	58	72	40	2,5
05300-060	25,4	53	38	25,4	33	60	13	8	48	38	32	6,5	24,5	64	36	175	14	68	44	217	77	113	58	72	60	2,5

Toggle clamps variable vertical

with horizontal foot

Material:
Steel.
Grip element made of 2-component plastic.

Version:
Tempered and galvanized.
Grip element oil-resistant.

Sample order:
nlm 05302-035

Note:
The toggle clamp adjusts automatically to the height of the workpiece. Infinitely adjustable clamping height within 35 mm with approximately constant clamping force without manual adjustment of thrust screw position. The clamping force can be adjusted up to 2.500 N according to requirements using a set screw under the lever in the hinge.
The hole pattern in the baseplate is suitable for millimetres and inches.

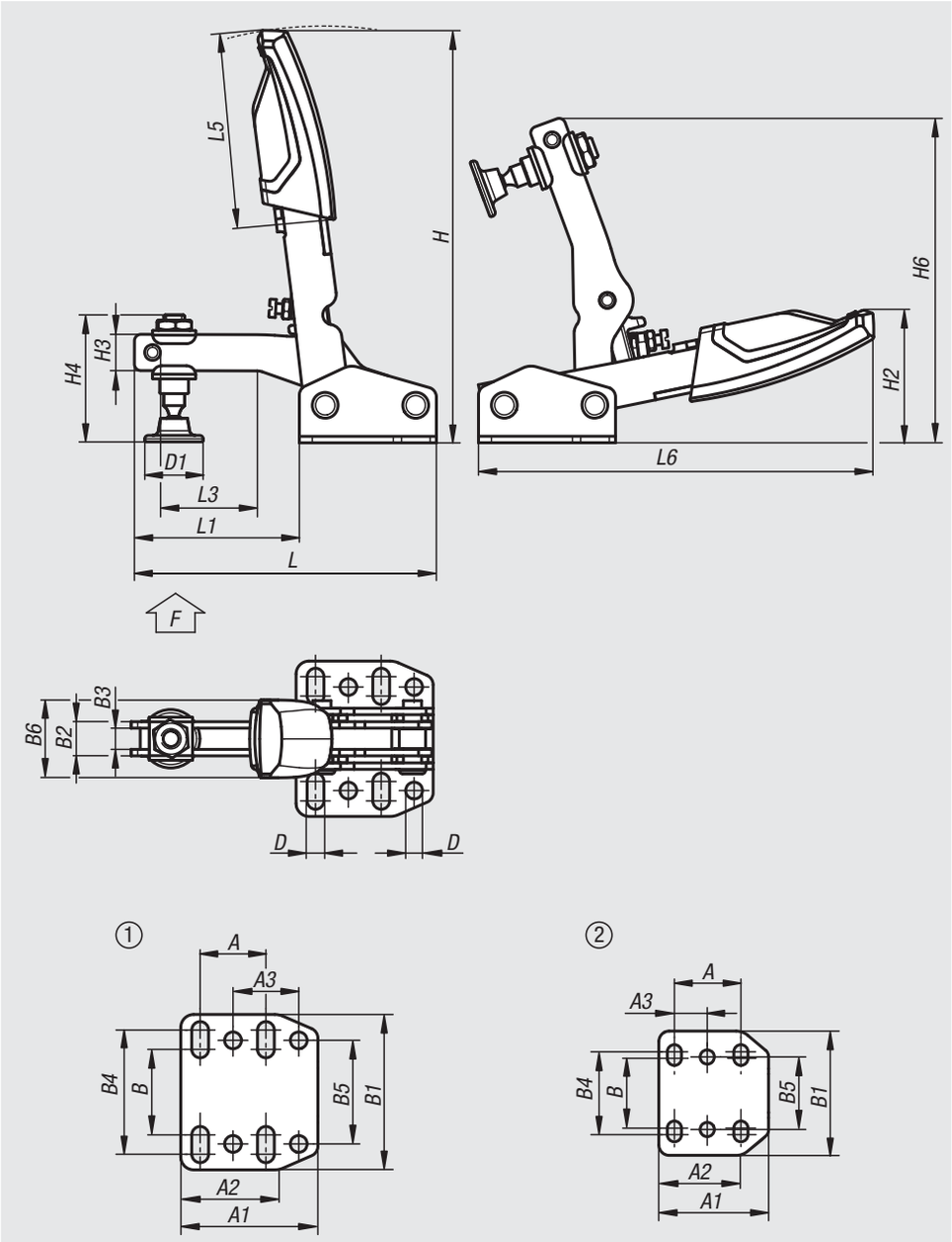

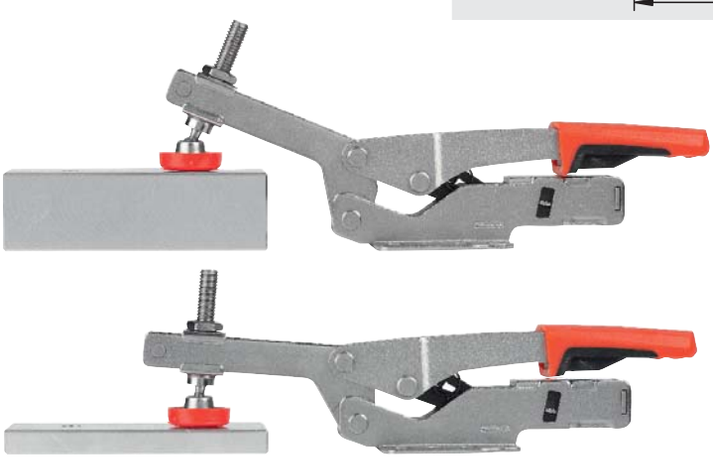

Order No.	hole arrangement	A	A1	A2	A3	B	B1	B2	B3	B4	B5	B6	D	D1	H	H2	H3	H4	H6	L	L1	L3	L5	L6	max. clamping height	F kN
05302-035	2	25,7	42,4	32,4	12,7	27	48	10	6	32	28	24	5,5	19	129	41	10	42	100	93,7	51,3	30	60	123	35	1,1
05302-040	1	25,4	53	38	25,4	33	60	13	8	48	40	30	6,5	25	160	62	14	60	126	116	63	40	76	154	40	2,5

Toggle clamps variable

with thrust rod

Material:
Steel.
Grip element made of 2-component plastic.

Version:
Tempered and galvanized.
Grip element oil-resistant.

Sample order:
nlm 05305-035

Note:
The toggle clamp adjusts automatically to the height of the workpiece. Infinitely adjustable clamping height within 13 mm with approximately constant clamping force without manual adjustment of thrust screw position.
The clamping force can be adjusted up to 2500 N according to requirements using a set screw under the lever in the hinge.
The hole pattern in the baseplate is suitable for millimetres and inches.

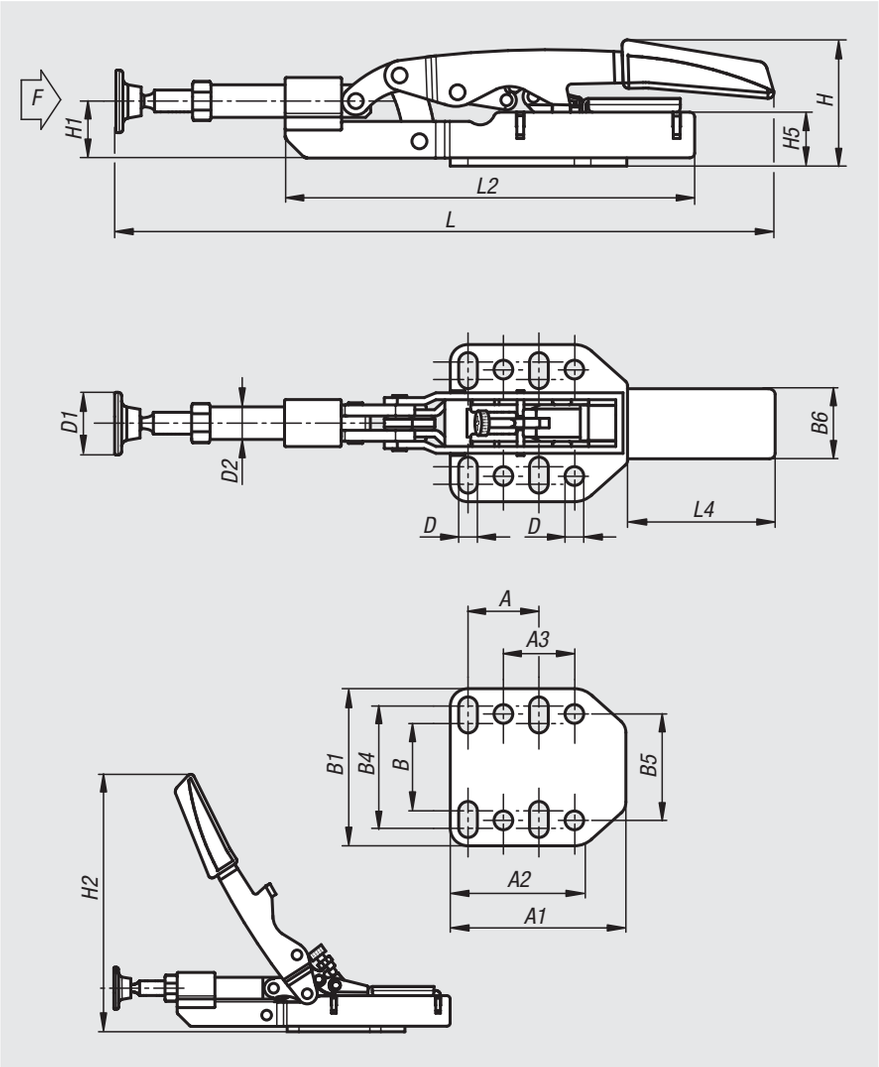

Order No.	A	A1	A2	A3	B	B1	B4	B5	B6	D	D1	D2	H	H1	H2	H5	L	L2	L4	max. clamping height	F kN
05305-035	25,4	53	38	25,4	33	60	48	38	32	6,5	23	12	46	27	155	25	233	154	73	35	2,5

Adapter block

aluminium

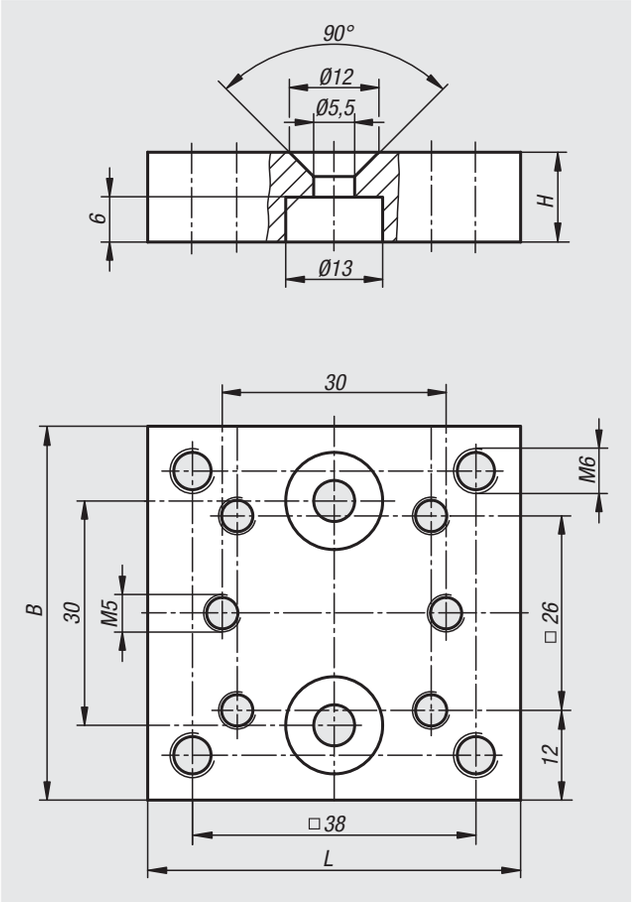

Material:
Aluminium.

Version:
natural colour anodized

Sample order:
nlm 05310-5050

Note:
Adapter blocks are used as risers in combination with the round adapter plates 05312.
Fastening screws and nuts for assembling the block are supplied.

Bestellnummer	B	H	L
05310-5050	50	12	50

Adapter plate

round

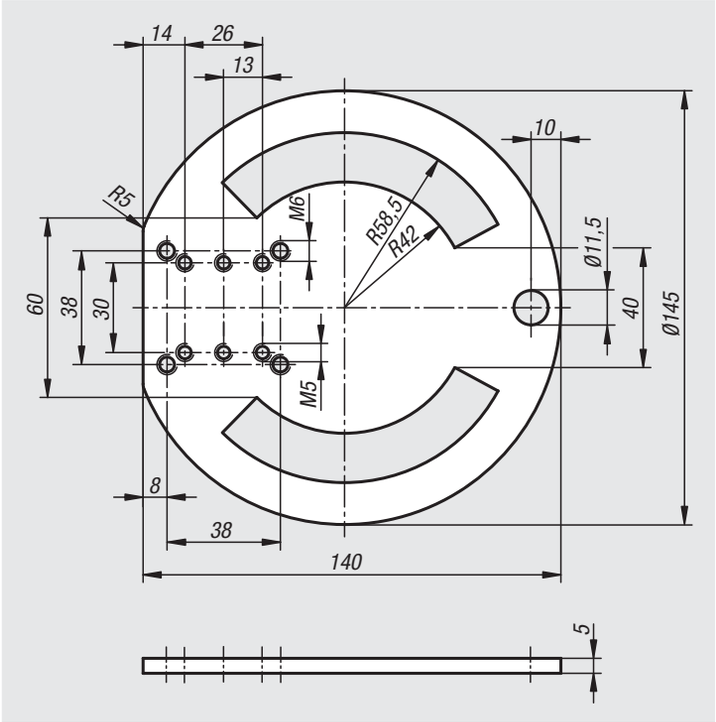

Material:
Steel.

Version:
Galvanised and passivated.

Sample order:
nlm 05312-145

Note:
Adapter plates can be used in combination with toggle clamps. They enable toggle clamps to be positioned flexibly.
The adapter plates are clamped to the machine table using eccentric clamp modules.

Accessories:
Eccentric clamp modules 10500
Toggle clamp 05….

Order No.	Description
05312-145	Adapter plate

Pneumatic clamp

Material:
Levers steel plate.
Hinge pins stainless steel.

Version:
Lever parts galvanized.
Pneumatic cylinder, double-acting.
With magnetic piston for end position feedback.
Clamp galvanized and passivated.
Complete with tempered, galvanized and passivated thrust screw with protective cap.

Sample order:
nlm 05331-01

Note:
Pneumatic clamps have the following advantages compared to hand clamps:
The operator is relieved of frequent clamping.
Several clamps can be activated at the same time and can be closed in a specific sequence.
Single or multiple clamps can be activated from varying positions by machine control or hand control.
Because of the toggle system:
– the clamp remains closed if the air supply fails.
– the air consumption is low due to the large end ratio.
– pivoting the clamping arm achieves a large opening travel.
– optimum force and movement ratios are achieved.

VL = air consumption per complete cycle in dm^3 at 6 bar.

Selection criteria:
To select the correct size of pneumatic clamps, the possible clamping force at 6 bar (any compressed media are permissible, maximum pressure 10 bar) is specified besides the retaining force. F3 is the possible clamping force that the clamp exerts on the end of the clamping arm, F4 the force it exerts on the fulcrum side.

Control:
The schematic diagram for the simplest control of one or several pneumatic clamps is shown here. When constructing complete switching systems consult a well known manufacturer of pneumatic valves who can also supply all the required connectors and fittings.

Attention:
The forces F1 and F2 specified in the table are holding forces.
F3 and F4 are clamping forces.

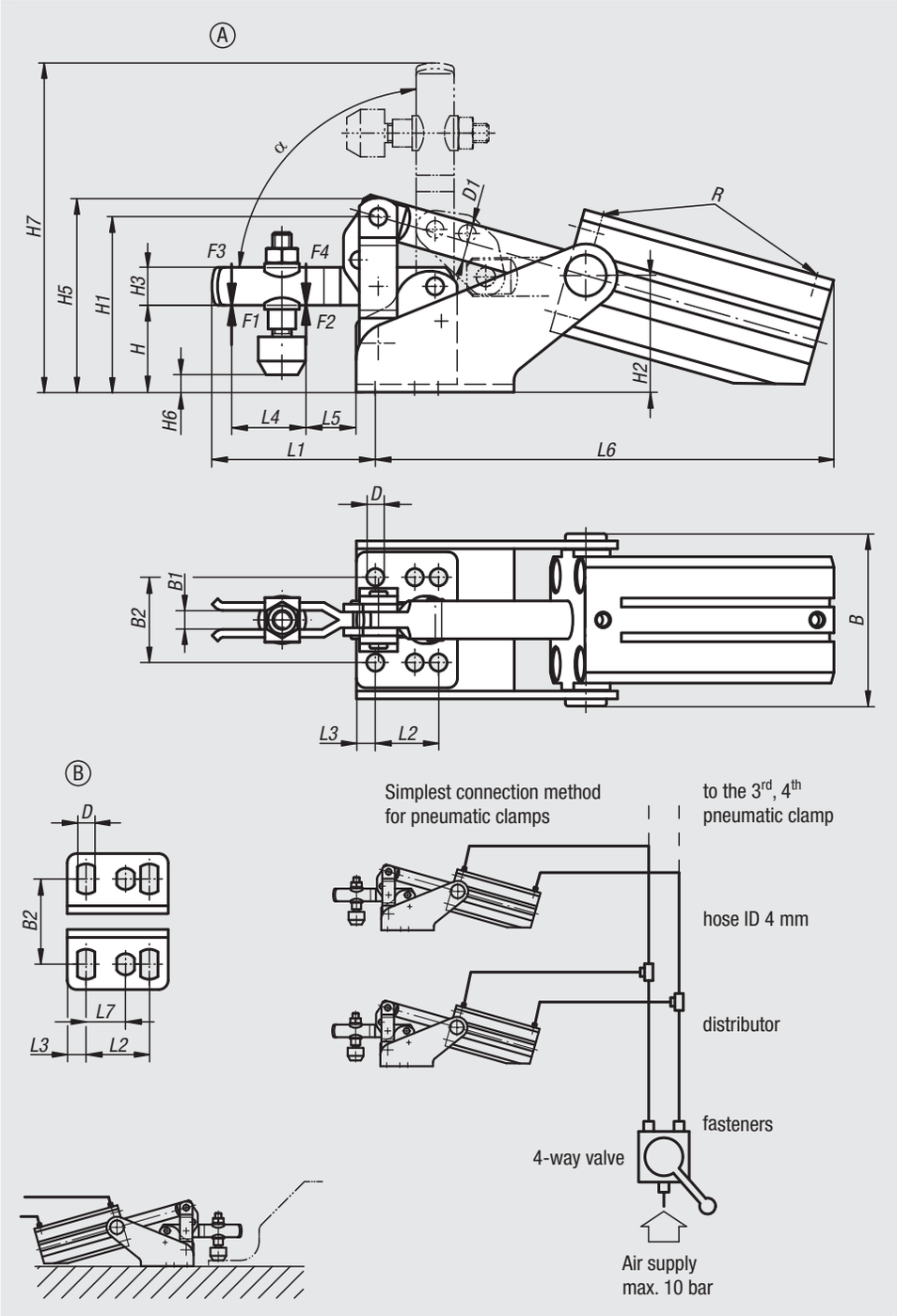

Pneumatic clamp

Order No.	Form	B	B1	B2	D	D1	H	H1	H2	H3	H5	H6	H7
05331-01	A	50	5	24	4,5	8	21	45,5	32	10	49,5	-2 to 4.5	84
05331-02	B	54,5	6	27	5,5	12	26	55	40,5	12	61	-1 to 7	104
05331-03	A	62,5	8	32	7,5	16	36,5	74,5	56	18	82,5	5.4 to 14	151
05331-04	A	77,5	10	45	8,6	16	45	90	64	20	98	-3 to 25.5	191

Order No.	L1	L2	L3	L4	L5	L6	L7	R	α	F1 kN	F2 kN	F3 kN	F4 kN	VL	suitable thrust screws
05331-01	39	16	6	18	6	126	-	M5	92°	0,8	1,1	0,2	0,3	0,08	M5x30
05331-02	51,5	20	6	25	11	145	12,5	M5	91,5°	1	1,2	0,7	1	0,26	M6x35
05331-03	78	20	7,5	36	19	165,5	-	G1/8	90°	1	2,5	0,65	1,1	0,35	M8x45
05331-04	101	32	13	45	25	196	-	G1/8	90,5°	2	3	1,5	2,2	0,8	M8x65

Pneumatic clamps push-rod

Material:
Base malleable iron.
Levers and push-rod carbon steel.

Version:
Body painted.
Bracket, levers and push-rod galvanised and passivated.

Sample order:
nlm 05340-07

Note:
The pneumatic clamp can be used as a push and pull clamp. The heavy-duty design and the dual-acting FESTO pneumatic cylinder guarantee a long life.
A tempered, galvanised and passivated thrust screw with protective cap is also supplied.

VL = compressed air consumption per complete cycle in dm^3 at 6 bar.

Attention:
The forces F1 specified in the table are holding forces F2 are clamping forces.

Drawing reference:
Y = cylinder travel

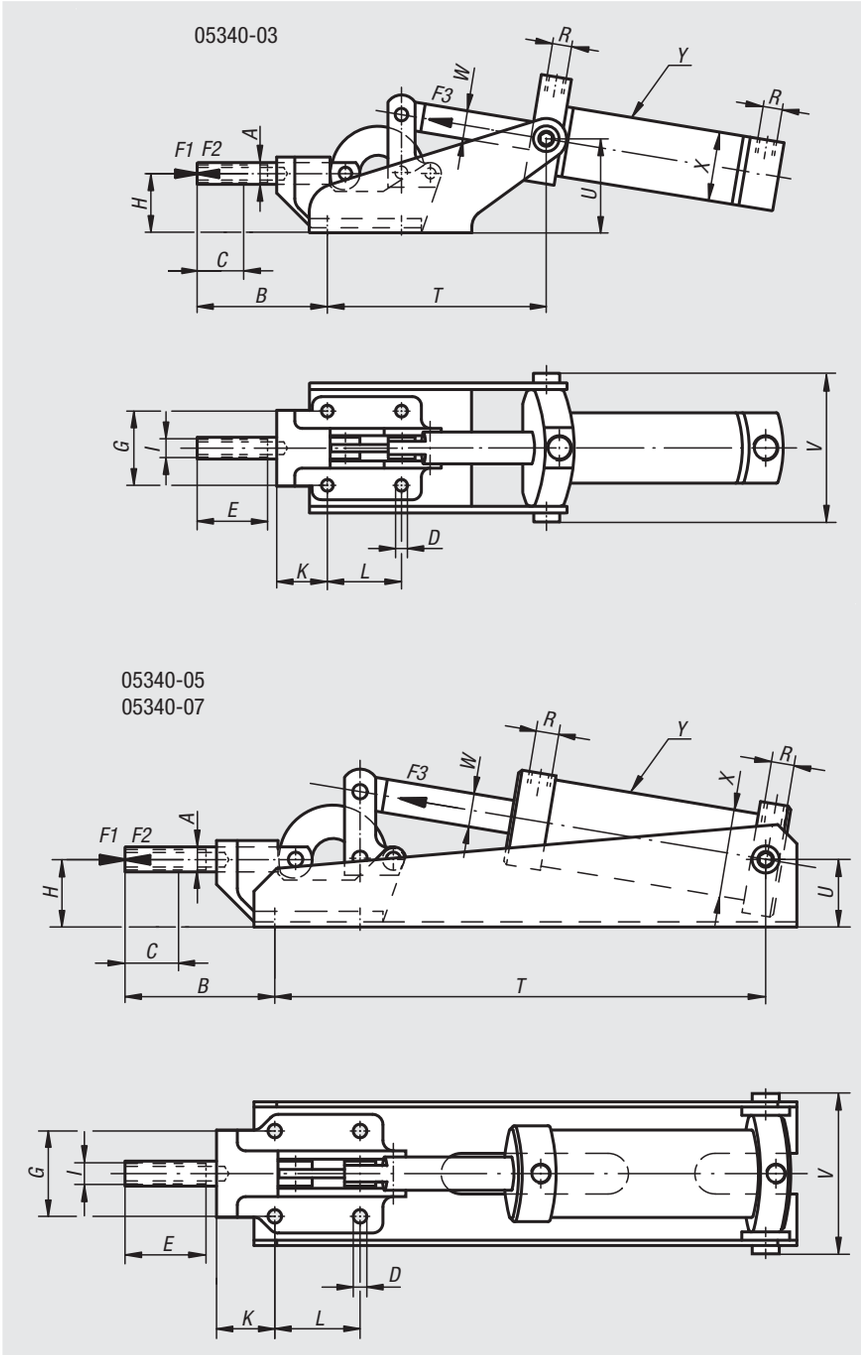

Order No.	A	B	C (travel)	D	E	G	H	I	K	L	T	U	V	W
05340-03	12	72	20	6,5	30	41	33	M8	28	41	125	56	84	16
05340-05	16	97	32	8,5	50	41	41	M12	45	41	322	38	84	16
05340-07	22	105	40	11	50	57	59	M12	44	70	404	49	114	16

Order No.	X	Y	R	F1 kN	F2 kN	F3 kN	VL	total height	total length	suitable thrust screws
05340-03	40	62	G1/8	4	2,5	0,75	0,8	91	328	M8x35
05340-05	50	100	G1/8	10	5	1	2,2	110	437	M12x50
05340-07	63	125	G1/4	25	10	1,8	4,5	150	533	M12x50

Pneumatic clamps vertical

heavy-duty version

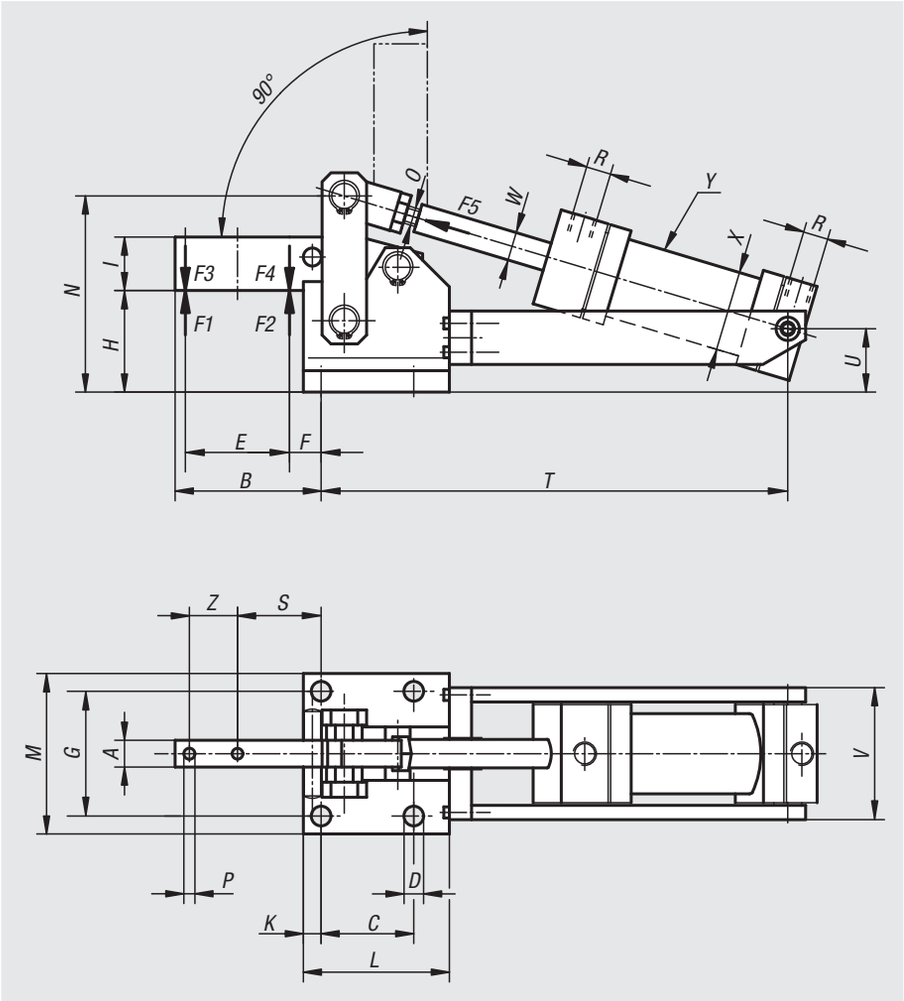

Material:
Carbon steel.

Version:
Black oxidised.

Sample order:
nlm 05350-06

Note:
The double-acting FESTO pneumatic cylinder guarantees a long life.
The fastening screws for the hinges are secured with LOCTITE.
The magnetic shaft is fitted for electrical end position feedback.

VL = air consumption per cycle in dm^3 by 6 bar.

Attention:
The forces F1 and F2 specified in the table are holding forces.
F3 and F4 are clamping forces.

Drawing reference:
Y = cylinder travel

Order No.	A	B	C	D	E	F	G	H	I	K	L	M	N	O	P	R	S	T
05350-04	15	82	52	11	54	20	70	57	30	10	77	90	109	M12x1,25	6,2	G1/4	47	277
05350-06	20	90	55	11	60	21	83	61	40	11	85	105	129	M16x1,5	8,2	G1/4	53	315
05350-08	30	128	80	13	95	22	111	86	60	12,5	112,5	135	176	M16x1,5	13,2	G1/4	69,5	383

Order No.	U	V	W	X	Y	Z	total height	total length	F1 kN	F2 kN	F3 kN	F4 kN	F5 kN	VL
05350-04	35,5	82	16	40	80	27	122	380	6	9	1,5	2,2	0,75	1
05350-06	40	101	16	50	100	26	147	435	12	18	2,5	3,5	1	1,8
05350-08	54	123	20	63	120	40	196	540	20	30	4	6	1,8	4,3

Pneumatic clamps vertical

with vertical mounted cylinder

Material:
Carbon steel.

Version:
Black oxidised.

Sample order:
nlm 05360-08

Note:
The clamps 05350 and 05360 are suitable for fitting in special machines and transfer machines. The tempered and ground bearing pins that run in Teflon bearings make them maintenance-free. The heavy-duty design and the double-acting FESTO pneumatic cylinder guarantee a long life.
The fastening screws for the hinges are secured with LOCTITE.
The magnetic piston is prepared for electric end position feedback.

VL = compressed air consumption per complete cycle in dm^3 at 6 bar.

Clamping and retaining forces
The selection of the correct clamp size is dependant on the force (see table). It is distinguish between retaining force F1 or F2 and clamping force F3 or F4.

The clamping force F3 and F4 is the force exerted by the clamping arm on the part to be machined when the clamp is closed.

The retaining force F1 and F2 is the force with which the closed clamping arm opposes the machining forces occurring on the part to be machined and which it resists with no permanent deformation. It is greater than the clamping force because the dead point of the lever has to be overcome with the clamp closed when being pushed back.

On request:
Clamps without cylinder.

Drawing reference:
Y = cylinder travel

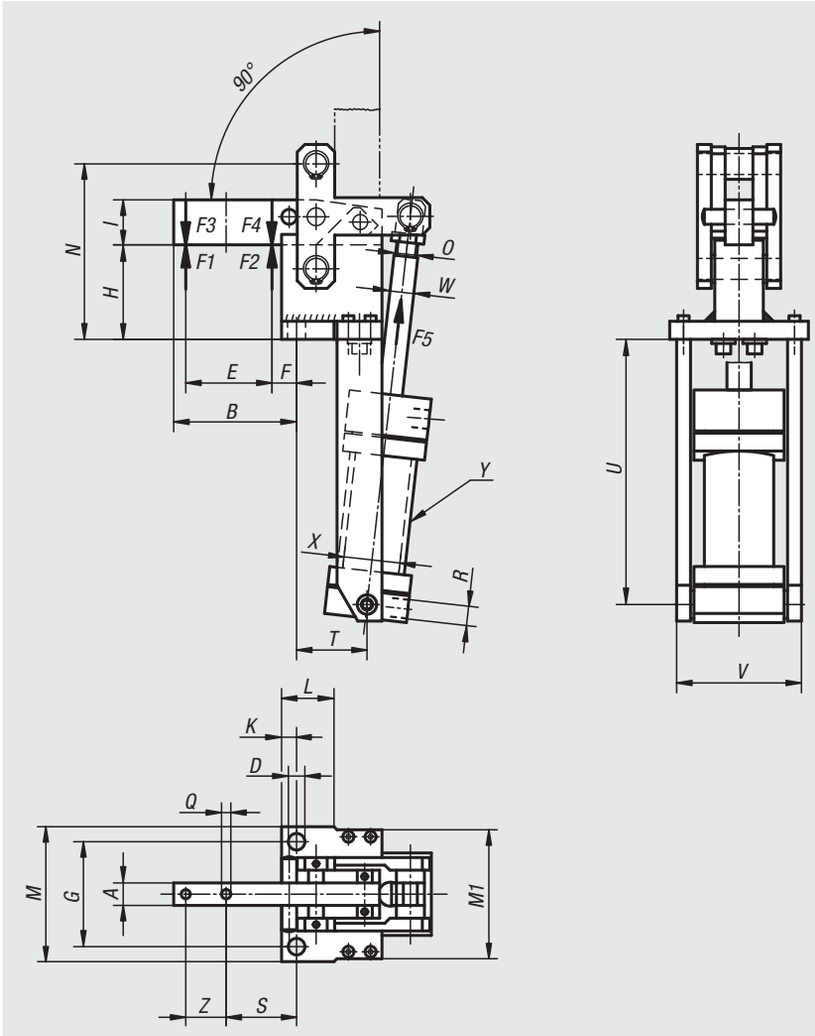

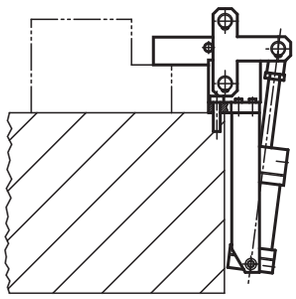

Order No.	A	B	D	E	F	G	H	I	K	L	M	M1	N	O	Q	S	T
05360-04	15	82	11	54	20	70	65	30	10	35	90	90	117	M12x1,25	6,2	47	46
05360-06	20	91	13	60	22	83	69	40	12	32	107	100	137	M16x1,5	8,2	54	48
05360-08	30	125	17	95	24,5	115	94	60	15	49	145	123	184	M16x1,5	13,2	67	77

Order No.	U	V	W	X	Y	R	Z	total height	total length	F1 kN	F2 kN	F3 kN	F4 kN	F5 kN	VL
05360-04	193	82	16	40	74	G1/4	27	172	340	6	9	1,5	2,2	0,75	1
05360-06	221	101	16	50	87	G1/4	26	195	386	12	18	2,5	3,5	1	1,8
05360-08	255	123	16	63	120	G1/4	40	272	470	20	30	4	6	1,8	4,3

Toggle clamps heavy duty

vertical

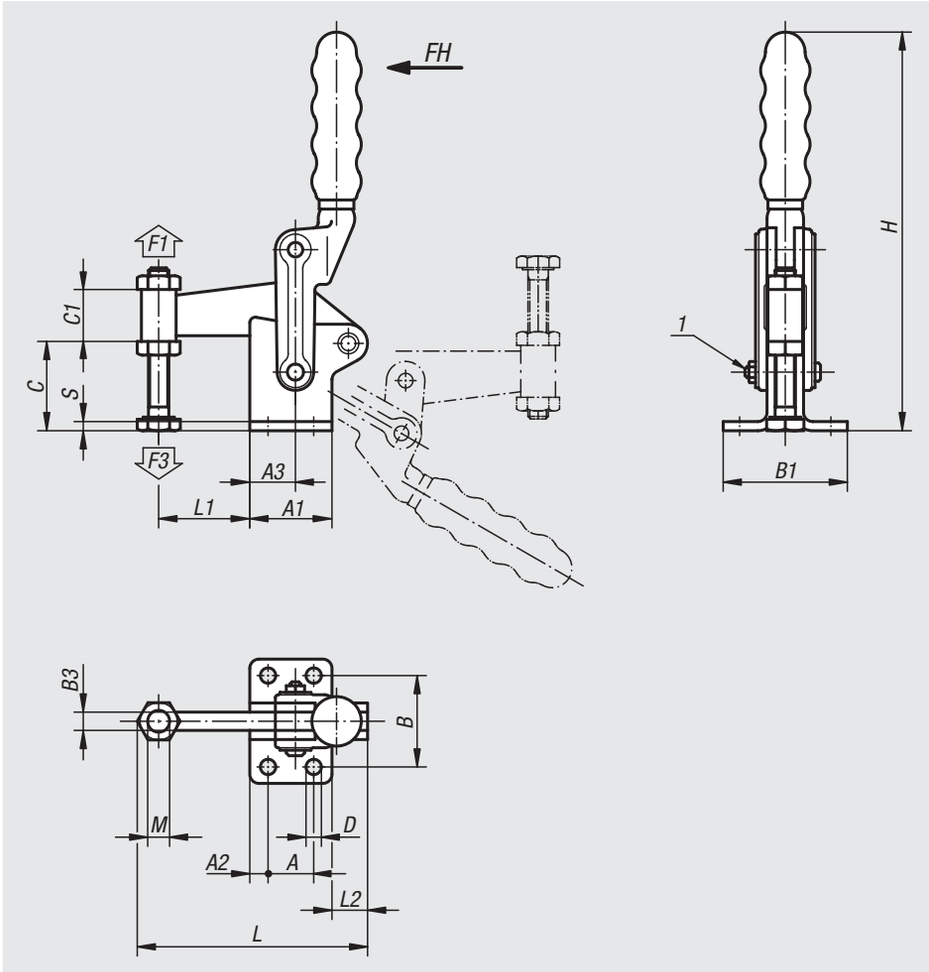

Material:
Steel.

Version:
Black oxidised. Thrust spindle and nuts phosphated.
Hinge pins and hinge bushes case-hardened.
Plastic grip oil-resistant.

Sample order:
nlm 05400-04

Note:
Oil all joints regularly.

Drawing reference:
1) adjustable clamp arm guide

Order No.	Opening angle of holding arm	Opening angle of handle	Hand force FH N	Retaining force F1 N	Clamping force F3 N	Matching plastic grip
05400-02	180°	120°	340	6000	1400	05520-02
05400-04	180°	125°	500	8000	1400	05520-04
05400-06	195°	130°	500	15000	1850	05520-06

Order No.	A	A1	A2	A3	B	B1	B3	C	C1	D	H	L	L1	L2	M	S
05400-02	25	45	10	25	50	68	10	45	30	8,3	215	124	50	20	M12x100	5
05400-04	30	51	10	25	60	86,5	12	58	30	8,3	250	144	60	23	M12x100	6
05400-06	40	64	12	40	75	103	16	70	38	10,3	295	188	75	37	M16x150	8

05420

Toggle clamps heavy duty version

straight foot

Material:
Steel.

Version:
Black oxidised.

Sample order:
nlm 05420-02

Note:
The axial bolts must be frequently lubricated. Avoid splashing welding material in the joints while assembling components (lever, arm). The toggle clamp can be assembled without the central base, directly on another support. To do so, unscrew bolt D2, remove the base and re-assemble the toggle clamp on the support located at D2.
Do not forget to weld plates A onto the new support.

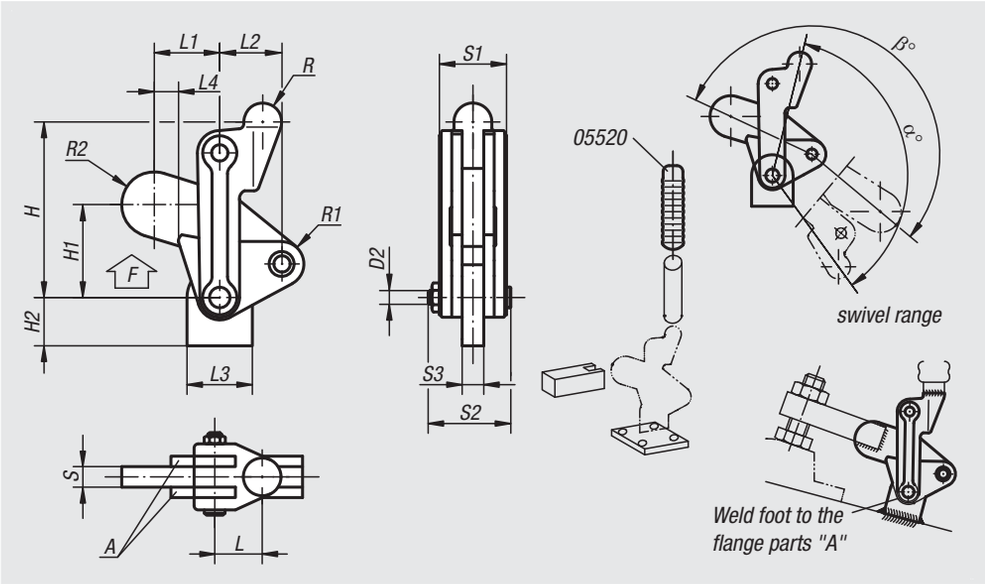

Order No.	L	L1	L2	L3	L4	H	H1	H2	D2	S	S1	S2	S3	R	R1	R2	α	β	F kN
05420-02	23	26,5	29	29	1,5	84	38,5	20	8,2	10	32	41	10	10	10	13,5	134°	205°	7
05420-04	25	38	36	38	13	100	54	28	9,5	12	38	48	12	11	13	19	134°	203°	12
05420-06	35	51	44	51	10	129	69	33	12,6	16	50	62	16	15	17	22	132°	200°	24

05520

Plastic grips

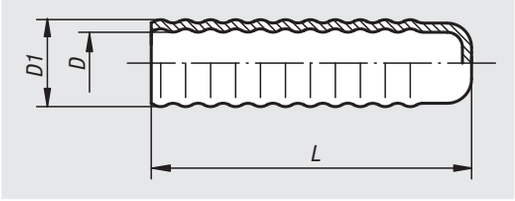

Material:
Plastic

Version:
Green

Sample order:
nlm 05520-04

Order No.	L	D	D1
05520-09	80	10	14,6
05520-00	80	12	16,5
05520-01	90	16	21
05520-02	90	19	25
05520-04	100	22	27
05520-06	100	25	29

Latches

with spring clip

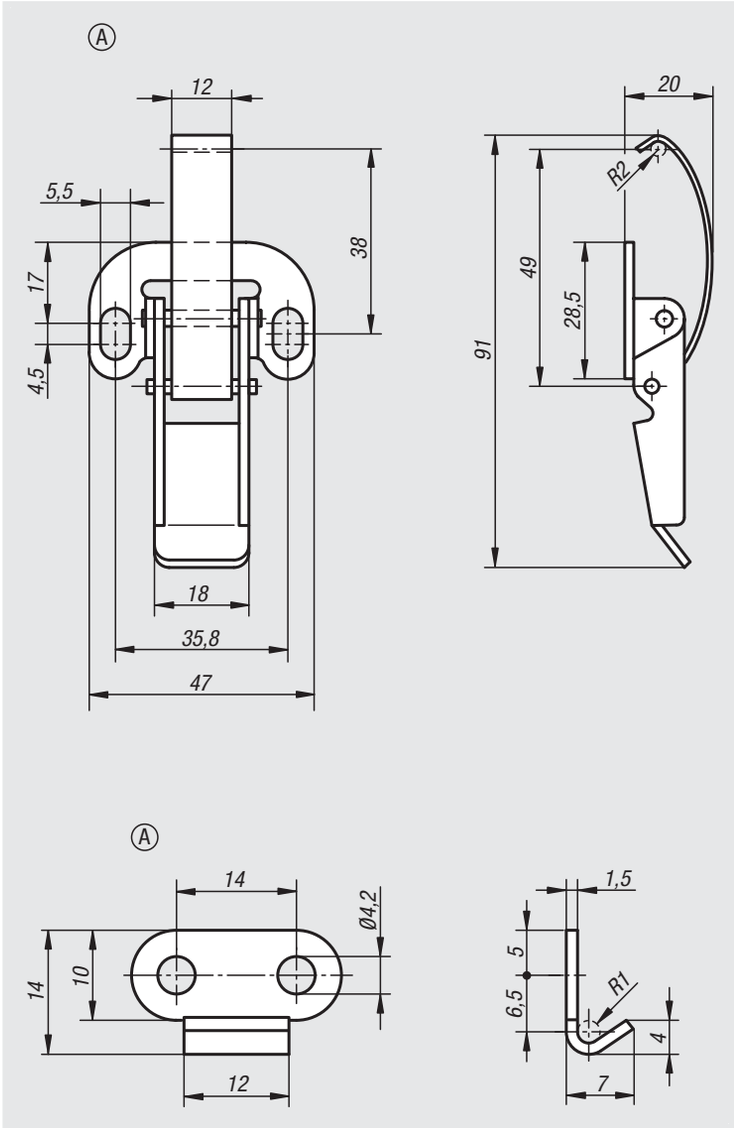

Material:
Steel or stainless steel 1.4301.

Version:
Galvanized, thick-film passivated and top coat sealed.
Stainless steel, bright.

Sample order:
nlm 05526-1550911 Latch
nlm 05526-91420141 Catch plate

Note:
Latches with spring clips for securing and locking hatches, container lids, machine cladding etc. By exceeding the dead centre they resist vibration.
The locking force is applied by tensioning a spring clip.

The latches can be screwed down or riveted. We recommend using countersunk screws for fastening the components.

Order catch plates separately.

Latches with spring clip

Order No. steel	Order No. stainless steel	Form
05526-1550911	05526-1550912	A

Catch plate

Order No. steel	Order No. stainless steel	Form
05526-91420141	05526-91420142	A

Latch stainless steel

DIN 3133

Material:
Stainless steel 1.4301.

Version:
Vibratory ground.

Sample order:
nlm Latch 05530-05-350742
nlm Catch plate 05530-05-91460442

Note:
For quickly locking vertical or horizontal lids and hatches.
With security seal possibility.

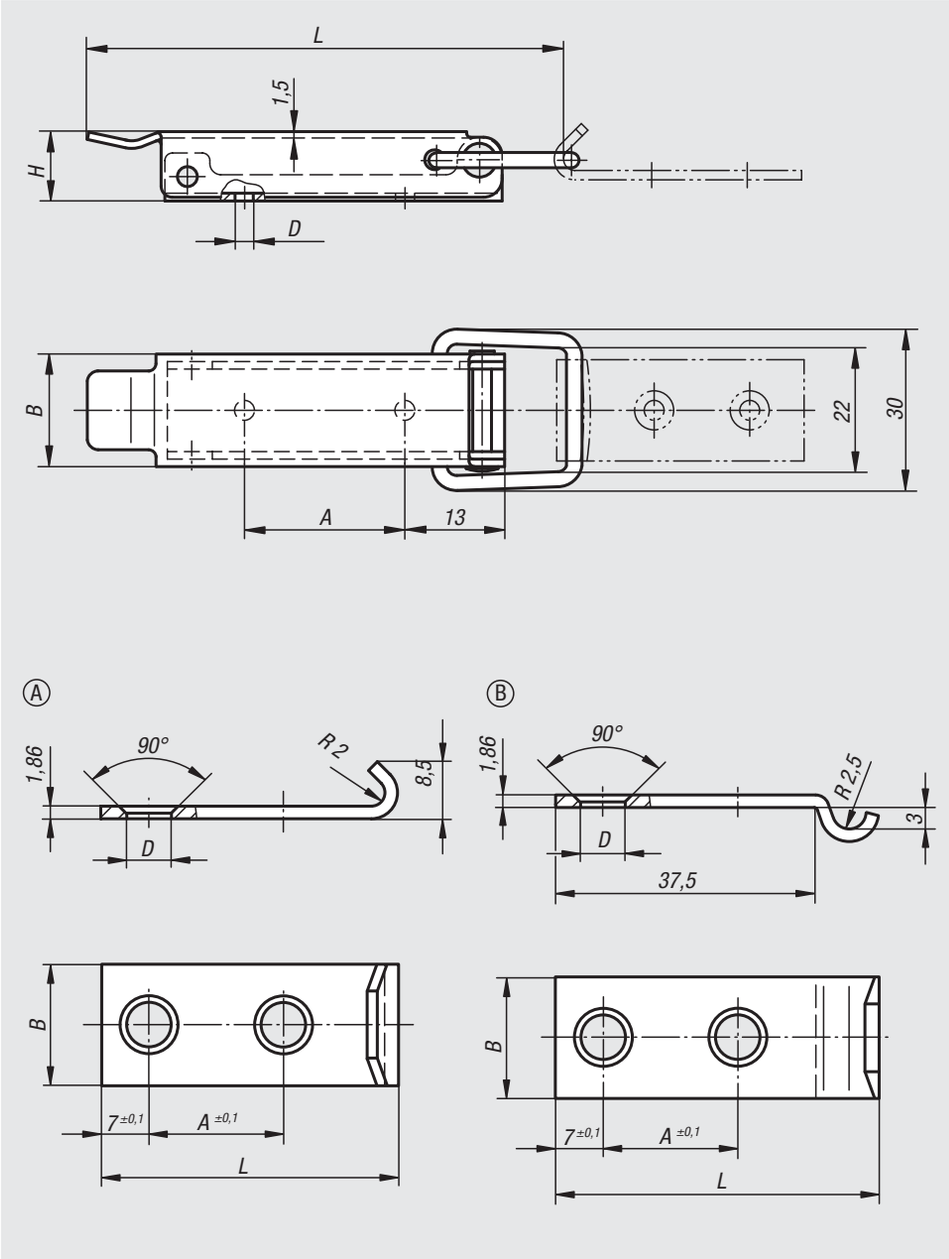

Latch stainless steel DIN 3133

Order No.	L	B	H	A	D
05530-05-350742	70	18	12	22	4

Catch plates

Order No.	Form	L	B	A	D
05530-05-91460442	A	44	18	20	4,6
05530-05-92460482	B	48	18	20	4,6

Latches

with draw bail

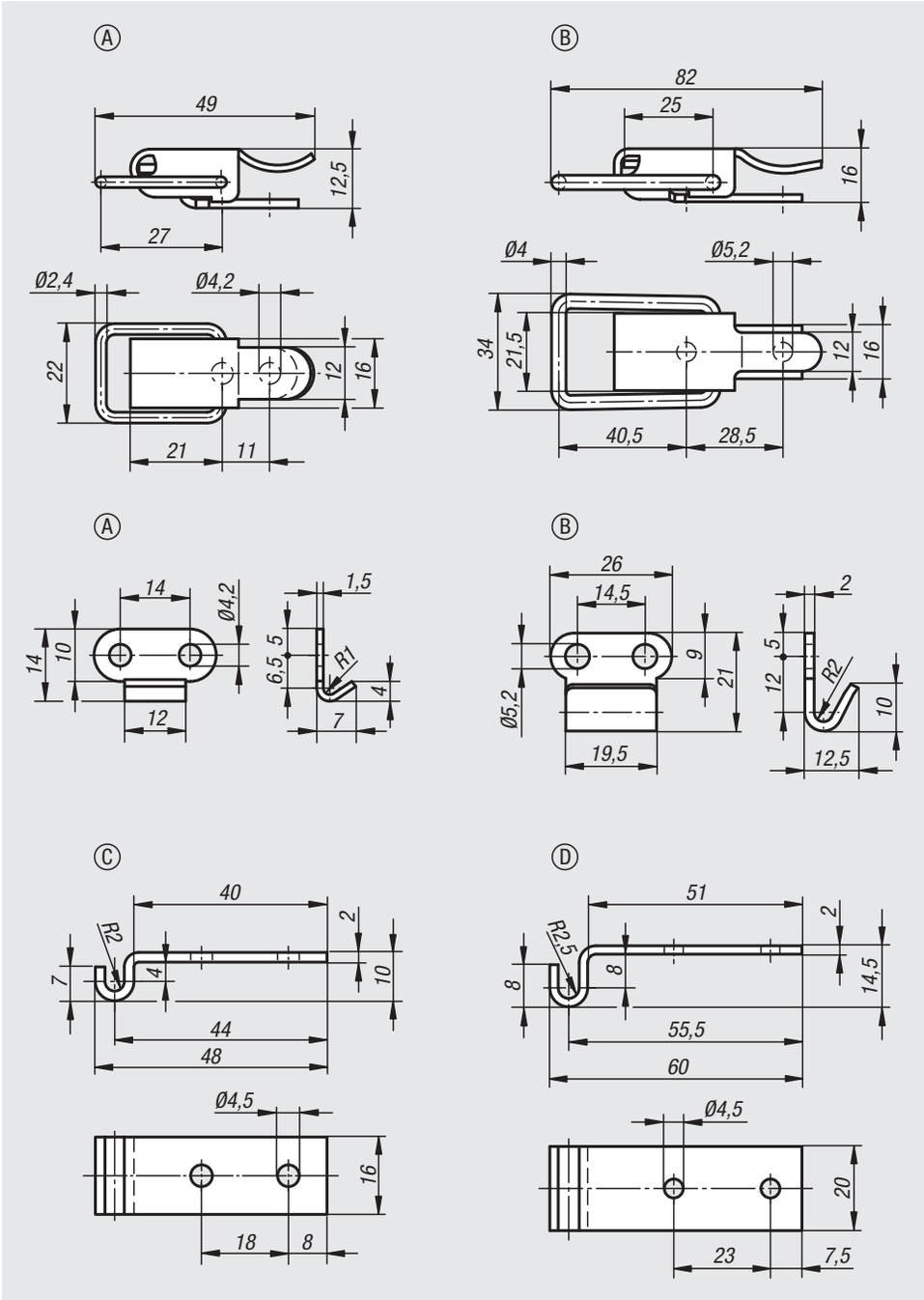

Material:
Steel or stainless steel 1.4301.

Version:
Galvanized, thick-film passivated and top coat sealed.
Stainless steel, bright.

Sample order:
nlm 05531-1420491 Latch
nlm 05531-92520211 Catch plate

Note:
Latches with draw bail for securing and locking hatches, container lids, machine cladding etc. By exceeding the dead centre they resist vibration. The locking force is applied by drawing on the bail.

The latches can be screwed down or riveted. We recommend using countersunk screws for fastening the components.

Order catch plates separately.

Latches with draw bail

Order No. steel	Order No. stainless steel	Form	Retaining force F1 N
05531-1420491	05531-1420492	A	250
05531-2520821	05531-2520822	B	300

Catch plate

Order No. steel	Order No. stainless steel	Form
05526-91420141	05526-91420142	A
05531-92520211	05531-92520212	B
05531-93450481	05531-93450482	C
05531-94450601	05531-94450602	D

Latches

with draw bail

Material:
Steel or stainless steel 1.4301.

Version:
Galvanized, thick-film passivated and top coat sealed.
Stainless steel, bright.

Sample order:
nlm 05536-1520871 Latch
nlm 05536-91520601 Catch plate

Note:
Latches with draw bail for securing and locking hatches, container lids, machine cladding etc. By exceeding the dead centre they resist vibration.
The locking force is applied by drawing on the bail.

The latches can be screwed down or riveted. We recommend using countersunk screws for fastening the components.

Order catch plates separately.

On request:
Lockable version with padlock bracket.

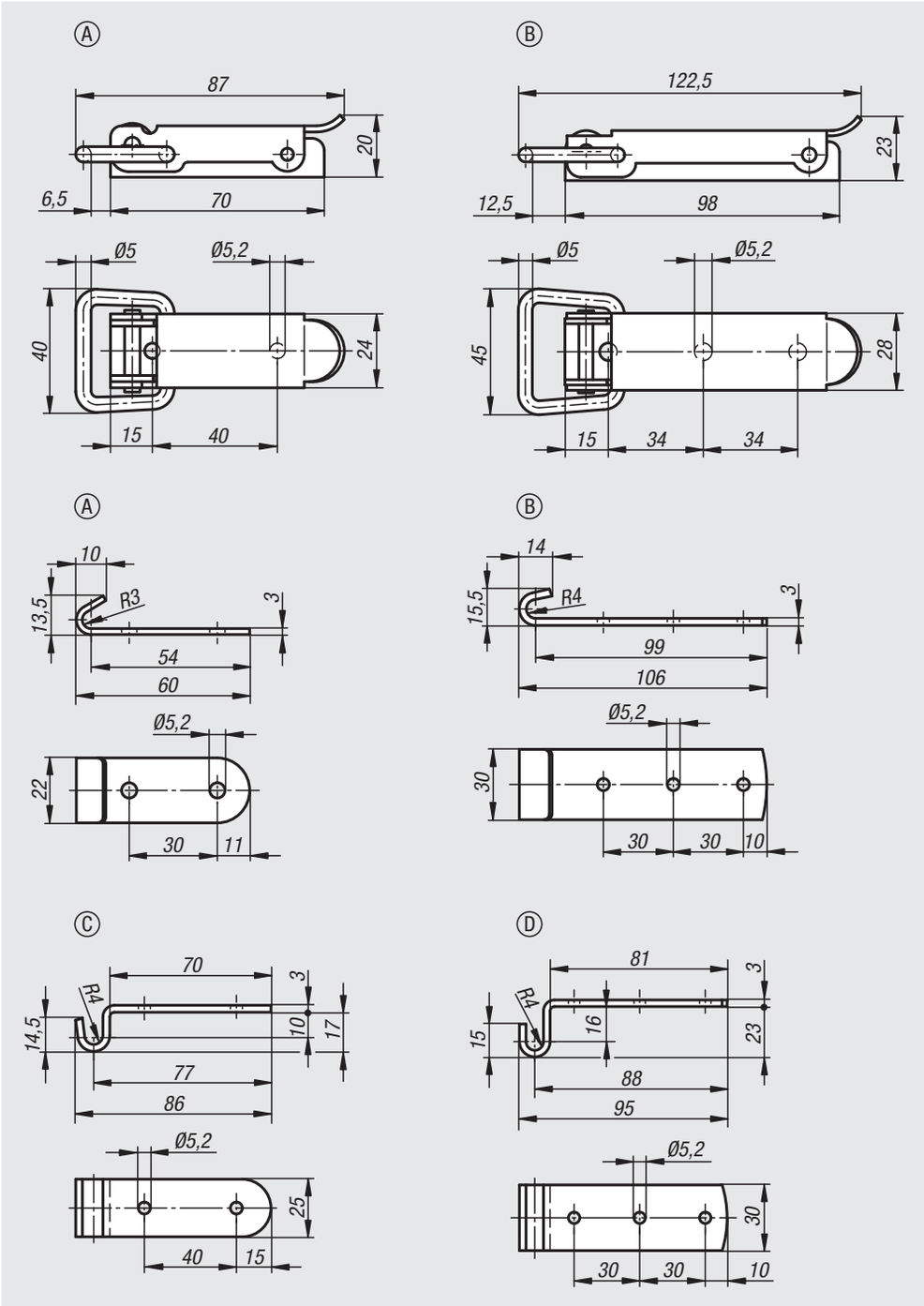

Latches with draw bail

Order No. steel	Order No. stainless steel	Form
05536-1520871	05536-1520872	A
05536-2521221	05536-2521222	B

Catch plate

Order No. steel	Order No. stainless steel	Form
05536-91520601	05536-91520602	A
05536-92521061	05536-92521062	B
05536-93520861	05536-93520862	C
05536-94520951	05536-94520952	D

Latches with release

stainless steel

Material:
Stainless steel 1.4301.

Version:
Bright.
The latch surface is satin finished.

Sample order:
nlm 05547-05-43082

Drawing reference:
1) Release

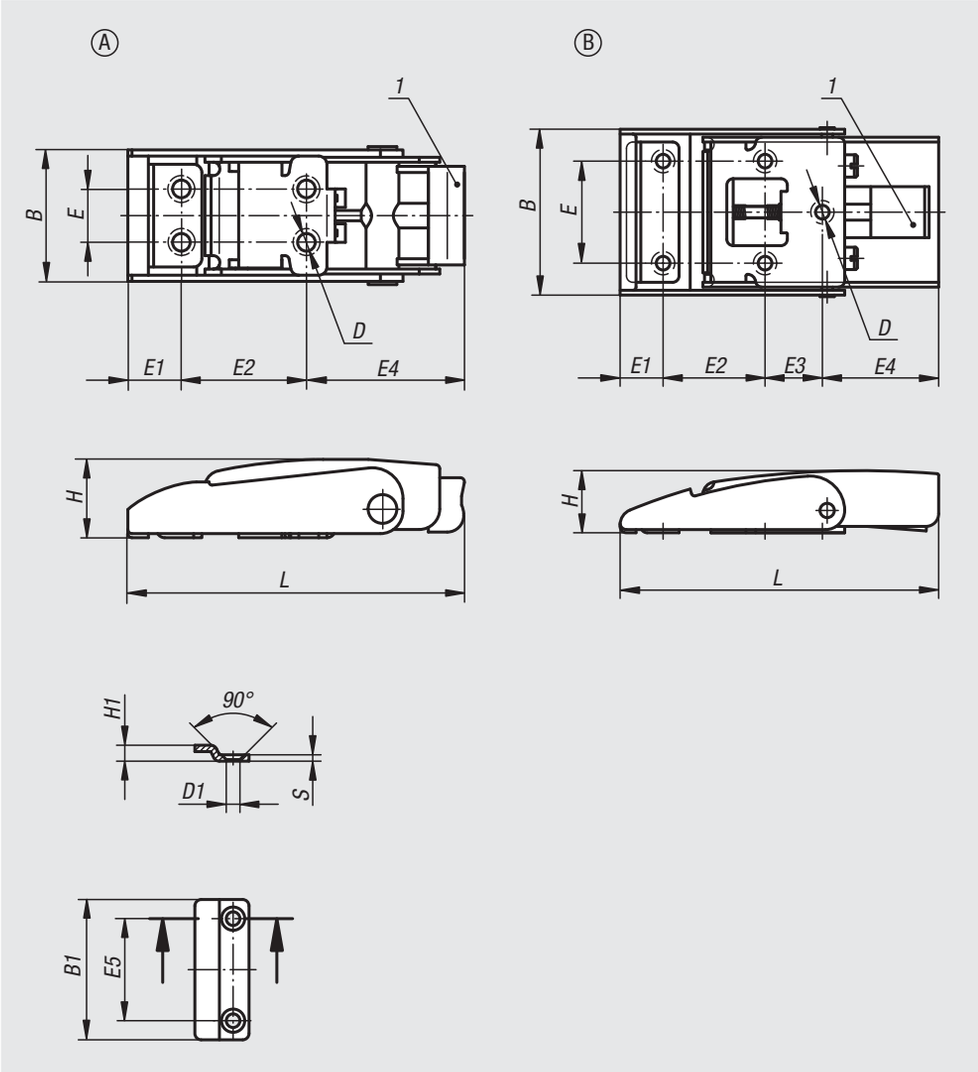

Order No.	Form	L	E	E1	E2	E3	E4	B	H	D	B1	E5	H1	D1	S
05547-05-43082	A	82	13	13,5	30	-	38,5	33,6	19,5	4,3	25	13	5	4,3	2
05547-05-43100	B	100	32	13,5	32	18	36,5	53	19,5	4,3	44	32	5	4,3	2

Latches adjustable

with swing bail

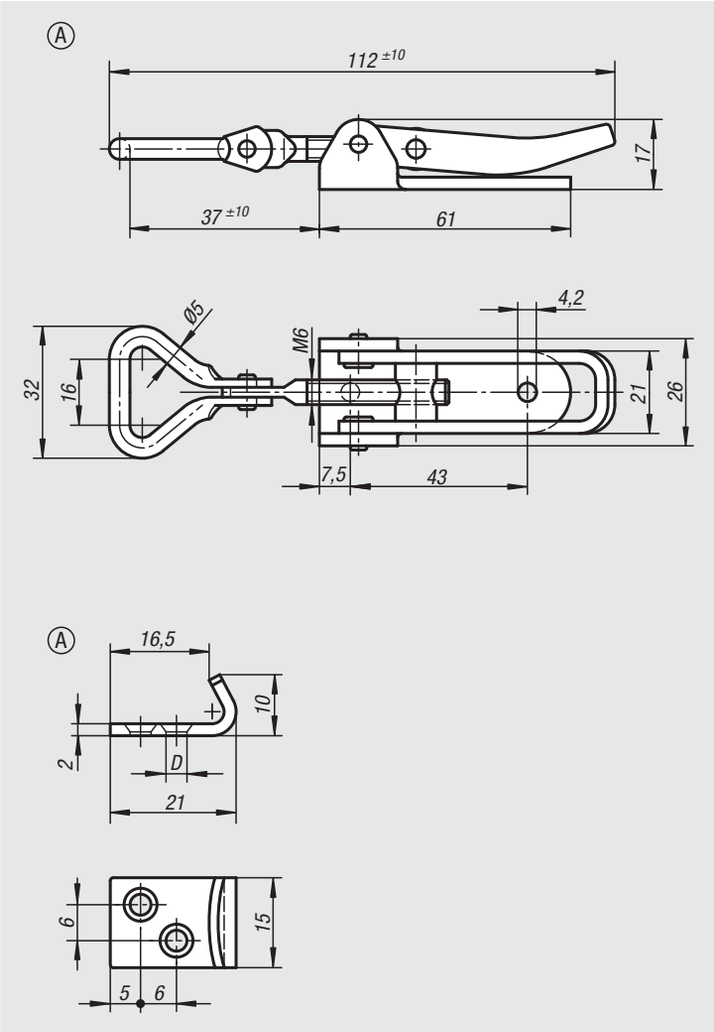

Material:
Steel or stainless steel 1.4301.

Version:
Galvanised and blue passivated
Stainless steel bright.

Sample order:
nlm 05550-1421121 Latch
nlm 05550-9135211 Catch plate

Note:
Adjustable latches are safe locking systems for industrial applications. By exceeding the dead centre they resist vibration. To compensate for tolerances the latch has a swing mounted bail.

After the bail is engaged with the catch plate, by pushing the lever down the parts to be locked can be drawn together by up to 15 mm. To compensate for tolerances or to create enough tension the bail length can be adjusted by the M6 threaded spindle.

The latches can be screwed down or riveted. We recommend using countersunk screws for fastening the components.

Order catch plates separately.

The retaining force F1 applies to the latch, not the catch plate.

On request:
Available with safeguard against unintentional opening.

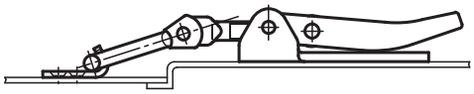

Latches adjustable, with swing bail

Order No. steel	Order No. stainless steel	Form	Retaining force F1 N
05550-1421121	05550-1421122	A	1000

Catch plates

Order No. steel	Order No. stainless steel	Form	D
05550-9135211	05550-9135212	A	3,7

Latches adjustable

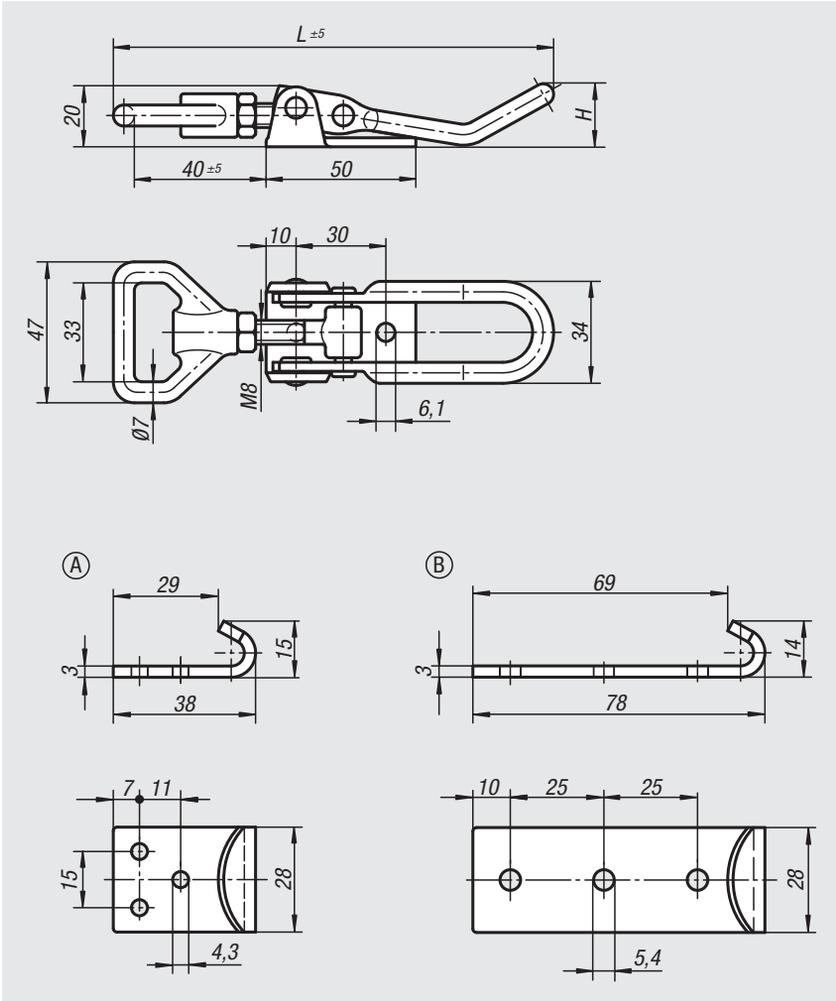

Material:
Steel or stainless steel 1.4301.

Version:
Galvanised and blue passivated
Stainless steel bright.

Sample order:
nlm 05552-1611451 Latch
nlm 05552-9143381 Catch plate

Note:
Adjustable latches are safe locking systems for industrial applications. By exceeding the dead centre they resist vibration.

After the bail engages with the catch plate, by pushing the lever down the parts to be locked can be drawn together by up to 15 mm. To compensate for tolerances or to create enough tension the bail length can be adjusted using the M8 spindle.

The latches can be screwed down or riveted. We recommend using countersunk screws for fastening the components.

Order the required catch plate version separately.

The retaining force F1 applies to the latch, not the catch plate.

On request:
Lockable version with padlock bracket.

Latches adjustable

Order No. steel	Order No. stainless steel	H	L	Retaining force F1 N
05552-1611451	05552-1611452	21	145	6500
05552-1611681	05552-1611682	36	168	6500

Catch plates

Order No. steel	Order No. stainless steel	Form
05552-9143381	05552-9143382	A
05552-9254781	05552-9254782	B

Adjustable latches

heavy-duty version

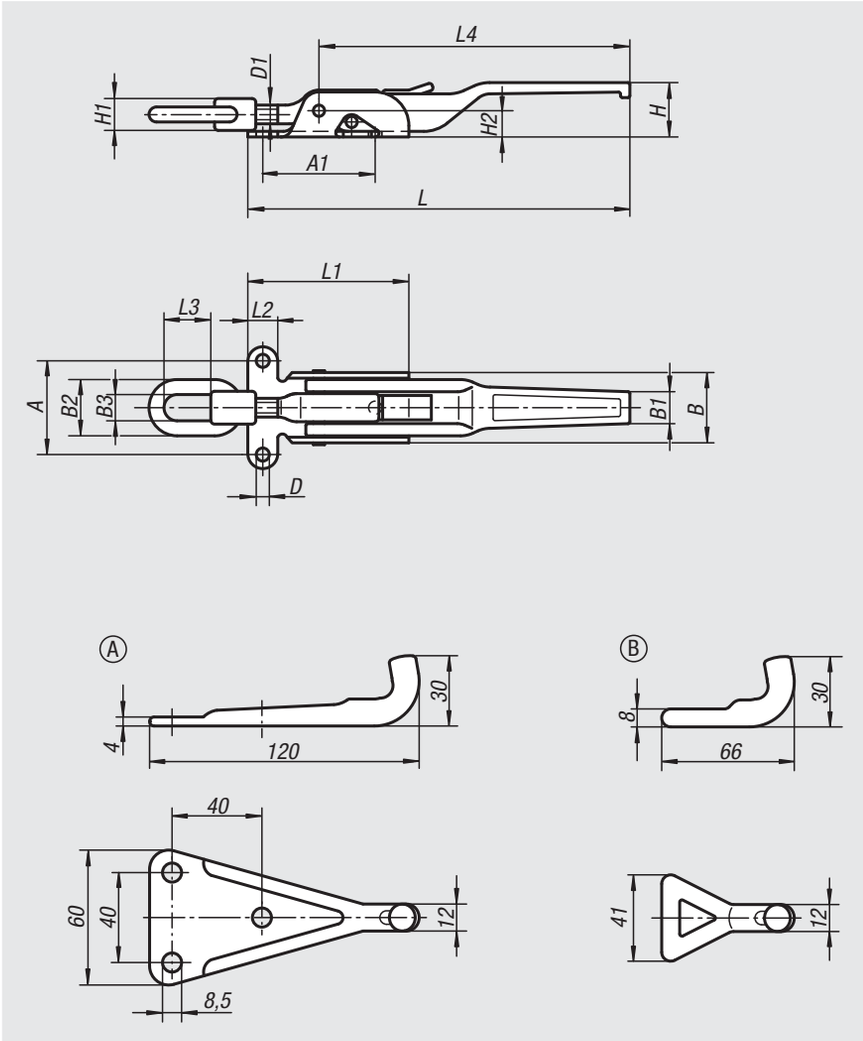

Material:
Steel.

Version:
Galvanised and blue passivated
Catch plate Form B (weldable), bright.

Sample order:
nlm 05560-1702041 Latch
nlm 05560-91851201 Catch plate

Note:
Heavy, forged latches for high tensile loads. Primarily used on utility vehicles, agricultural and construction machinery. A ratchet prevents unintentional opening when closed.

To compensate for tolerances or to create enough tension the bail can be adjusted using the spindle D1.

Order required catch plate version separately.

The retaining force F1 applies to the latch, not the catch plate.

Latches adjustable, heavy-duty version

Order No.	A	A1	B	B1	B2	B3	D	D1	H	H1	H2	L	L1	L2	L3	L4	Retaining force F1 N
05560-1702041	50	62	37	18	30	14	7	M10	30	17	14	204	86	16	25	165	20000
05560-1852371	65	82	50	20	36	15	8,5	M14x1,5	32	20	18	237	104	21	40	190	30500

Catch plates

Order No.	Form
05560-91851201	A
05560-92000601	B

Quarter-turn locks compact

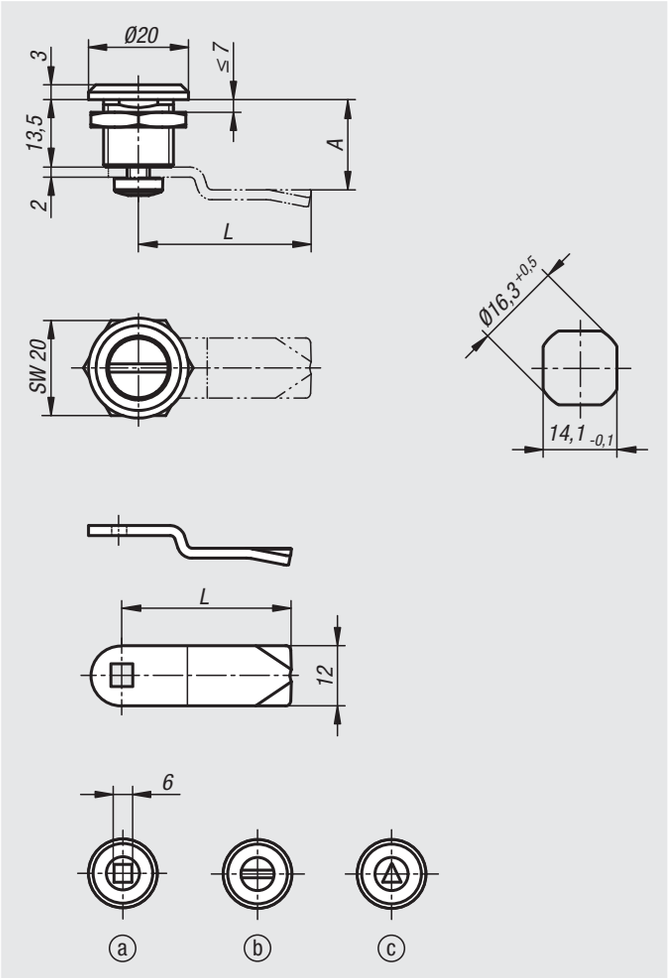

Material:
Housing and actuator die-cast zinc.
Nut brass.
O-ring NBR, flat seal CR.
Tongue steel.

Version:
Housing and actuator, chromed or black powder-coated.
Nut and tongue, galvanised.

Sample order:
nlm Quarter-turn lock 05561-16131
nlm Tongue 05563-0124X075 (include tongue gap “A”)

Note:
This quarter-turn lock is vibration-resistant through a detent mechanism in the end position. Right or left mounting with 90° closing and internal rotation limit. The quarter-turn lock can be installed pre-assembled (limitations by small A-dimensions and thick doors). Tested according to DIN EN 60068-2-64 (vibration) and DIN EN 60068-2-27 (shock), test standard 61373. Vibration-proof as per rail applications category 1, class B requirements (highest requirement).

Water and dust proof as per IP65 through O-ring and flat seal.

Order the required tongue version separately. Every tongue can be combined with every housing.

Accessories:
Lock key 05586

Drawing reference:
Actuation:
a) square 6 mm
b) slot
c) triangle 6,5 mm

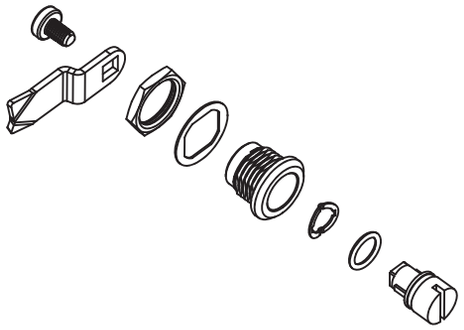

Quarter-turn locks compact

Order No. chromed	Order No. black powder-coated	Actuation
05561-16131	05561-16132	square 6 mm
05561-20131	05561-20132	slot
05561-86131	05561-86132	triangle 6.5 mm

Tongue for quarter-turn lock

Order No.	A	L
05563-0124X	7,5/13,5/19,5	24

Quarter-turn lock, stainless steel

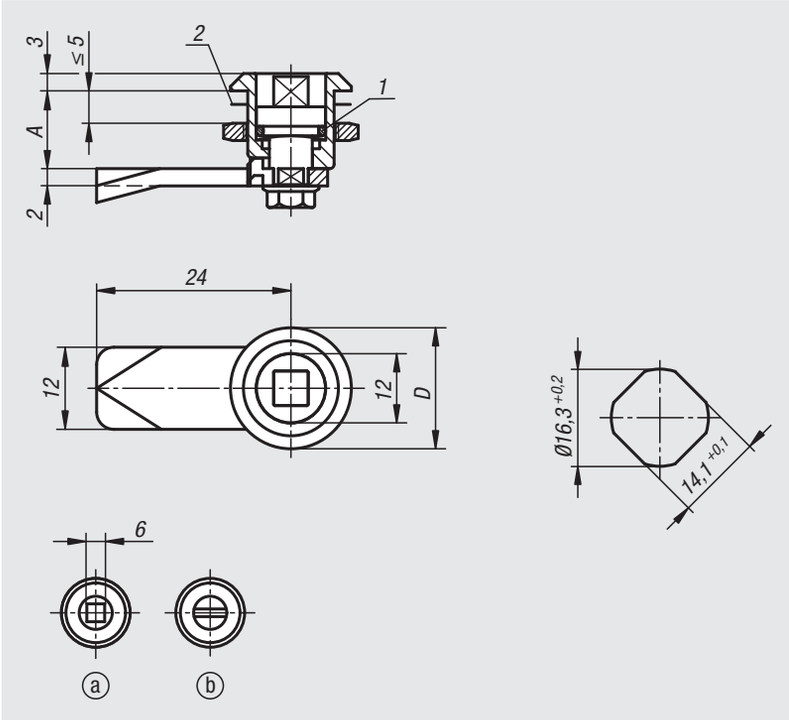

Material:
Quarter-turn lock 1.4401 stainless steel.
Tongue 1.4301 stainless steel.

Version:
Bright.

Sample order:
nlm 05561-02-1613

Note:
The lock can be installed pre-assembled and has a 90° closing angle.
It is protected against water and dust according to IP65 of EN 60529.

Accessories:
Lock key 05586

Drawing reference:
Actuation:
a) square 6 mm
b) slot

1) O-ring
2) flat seal

Order No.	Actuation	A	D
05561-02-1613	square 6 mm	13,5	20
05561-02-2013	slot	13,5	20

Quarter-turn locks compact

with wing grip

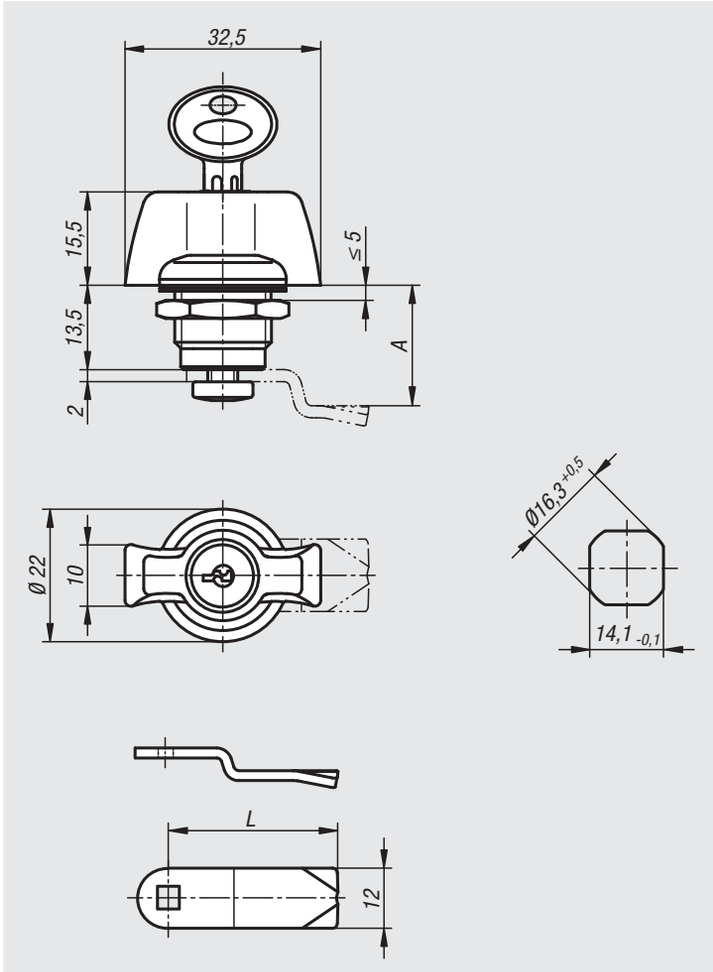

Material:
Housing and actuator die-cast zinc.
Nut brass.
O-ring NBR, flat seal CR.
Tongue steel.

Version:
Housing chromed.
Actuator black powder-coated.
Nut and tongue galvanised.

Sample order:
nlm Quarter-turn lock 05562-30132
nlm Tongue 05563-0124X075 (include tongue gap “A”)

Note:
This quarter-turn lock is vibration-resistant through a detent mechanism in the end position. Right or left mounting with 90° closing and internal rotation limit. The quarter-turn lock can be installed pre-assembled (limitations by small A-dimensions and thick doors).

Water and dust proof as per IP65 through O-ring and flat seal.

The lockable quarter-turn locks are supplied with 2 keys. The key can be removed in both positions (opened and closed). The cylinder locks have a single key system i.e. the same key works in all locks (cylinder lock 2233).

Order the required tongue version separately. Every tongue can be combined with every housing.

Accessories:
Lock key 05586

Quarter-turn locks compact with wing grip

Order No.	Actuation
05562-30132	grip
05562-31132	lockable grip

Tongue for quarter-turn lock

Order No.	A	L
05563-0124X	7,5/13,5/19,5	24

Quarter-turn locks compact

lockable

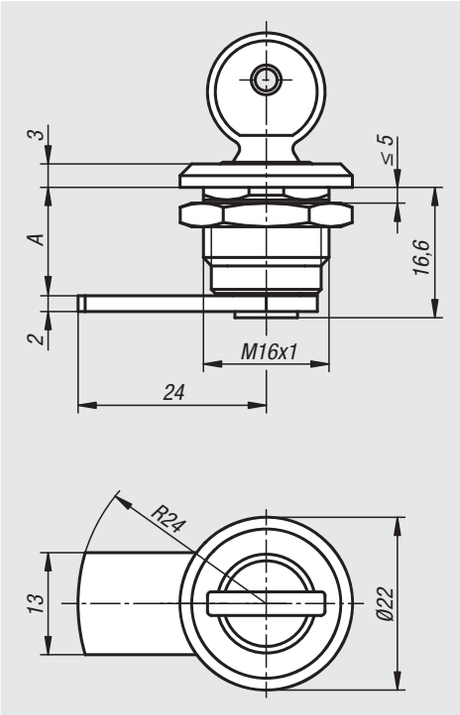

Material:
Housing and actuator die-cast zinc.
Nut brass.
Tongue steel.
Key nickel silver.

Version:
Housing and actuator chromed.
Nut and tongue galvanised.

Sample order:
nlm 05564-1135

Note:
Lockable quarter-turn lock, right or left mounting with 90° closing. The quarter-turn lock can be installed pre-assembled.

These lockable quarter-turn locks are supplied with 2 keys. The key can be removed in both positions (open and closed). The cylinder locks have a single-key system i.e. the same key works in all locks (lock type 2233).

Order No.	Actuation	A
05564-1075	key	7,5
05564-1135	key	13,5
05564-1195	key	19,5

Notes

Quarter-turn locks

Material:
Housing, actuator and nut die-cast zinc.
O-ring NBR, flat seal PUR.
Tongue steel.

Version:
Housing and actuator, chromed or black powder-coated.
Nut and tongue, galvanised.

Sample order:
nlm Quarter-turn lock 05566-17181
nlm Tongue 05570-145X040 (include tongue gap “A”)

Note:
Quarter-turn lock is vibration-resistant through a detent mechanism in the end position. Right or left mounting with 90° closing and internal rotation limit. The quarter-turn lock can be installed pre-assembled (limitations by small A-dimensions and thick doors). Tested according to DIN EN 60068-2-64 (vibration) and DIN EN 60068-2-27 (shock), test standard 61373. Vibration-proof as per rail applications category 1, class B (highest requirement). The fastening nut has claws allowing it to be used as an earthing nut.

Water and dust proof as per IP65 through O-ring and foamed-on PUR seal.

Order the required tongue version separately. Every tongue can be combined with every housing.

Accessories:
Lock key 05586

Drawing reference:
Actuation:
a) square 7 mm
b) square 8 mm
c) slot
d) double lug 3 mm
e) double lug 5 mm
f) triangle 8 mm

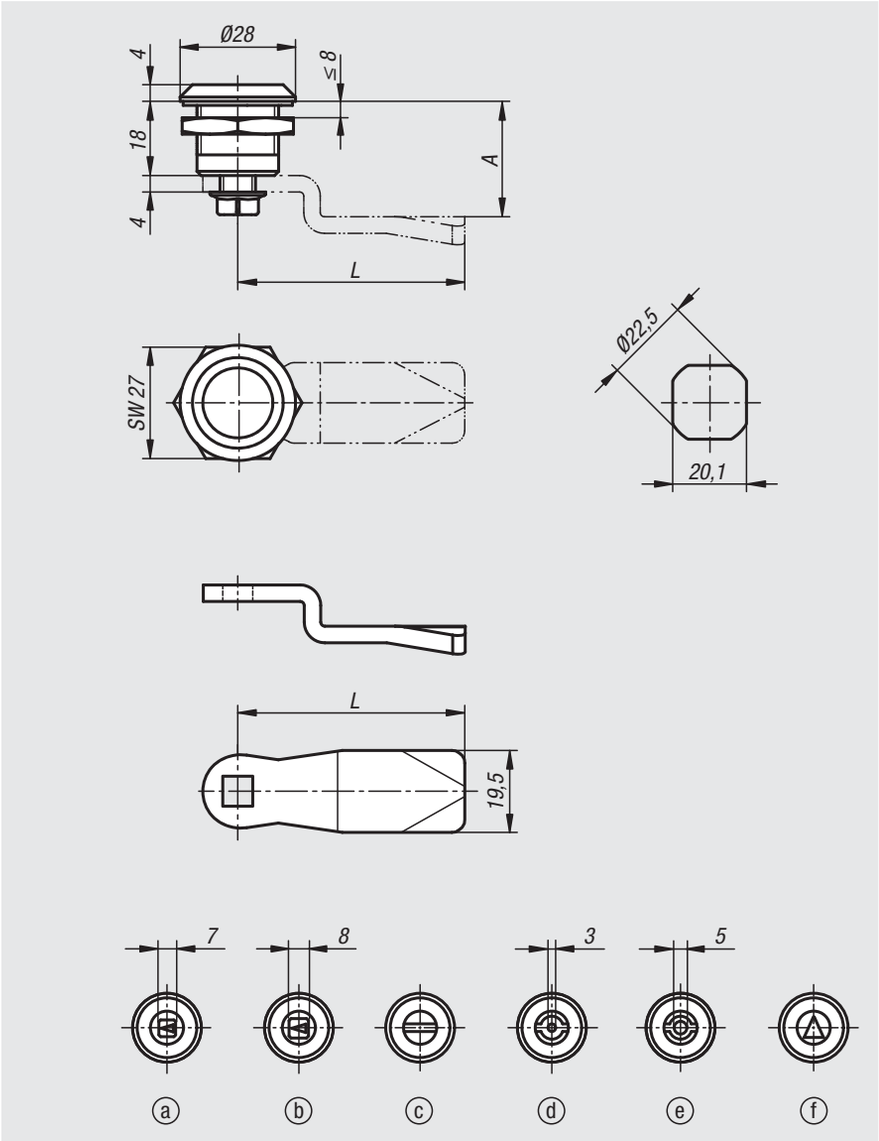

Quarter-turn lock

Order No. chromed	Order No. black powder-coated	Actuation
05566-17181	05566-17182	square 7 mm
05566-18181	05566-18182	square 8 mm
05566-20181	05566-20182	slot
05566-43181	05566-43182	double lug 3 mm
05566-45181	05566-45182	double lug 5 mm
05566-88181	05566-88182	triangle 8 mm

Tongue for quarter-turn lock

Order No.	A	L
05570-145X	4/6/8/10/12/14/16/18/20/22/24/26/28/30/32/34/36/38/40/42	45
05570-135X	16/18/20/22/24	35

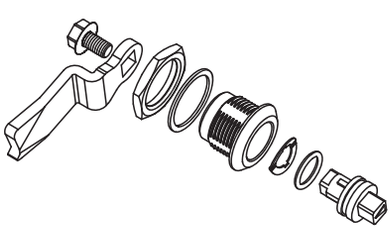

Quarter-turn locks

stainless steel, small version

Material:
Housing, stainless steel 1.4401.
Actuation and fastening nut, stainless steel 1.4404.
Tongue 1.4301 stainless steel.

Version:
Bright.

Sample order:
nlm Quarter turn lock 05566-03-1718
nlm Tongue 05566-07-450660

Note:
The quarter turn lock can be installed pre-assembled. For right or left use. Water and dust protected acc. to IP65 from DIN EN 60529.

Please order required tongue version separately. Every tongue can be combined with every housing.

Accessories:
Lock key 05586

Drawing reference:
Actuation:
a) square 7 mm
b) square 8 mm
c) double lug 3 mm
d) double lug 5 mm
e) wing grip

1) O-ring
2) flat seal

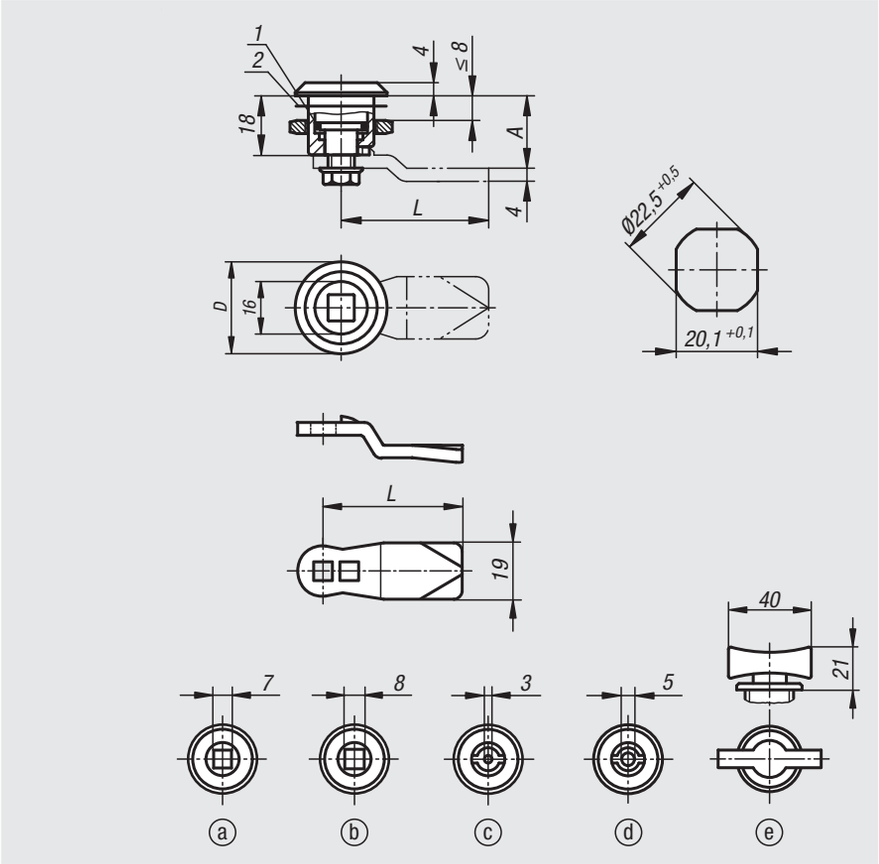

Quarter-turn locks, stainless steel, small version

Order No.	Actuation	D
05566-03-1718	square 7 mm	28
05566-03-1818	square 8 mm	28
05566-03-4318	double lug 3 mm	28
05566-03-4518	double lug 5 mm	28
05566-03-0018	grip	28

Tongue for quarter-turn lock

Order No.	A	L
05566-07-45060	6	45
05566-07-45080	8	45
05566-07-45100	10	45
05566-07-45140	14	45
05566-07-45160	16	45
05566-07-45180	18	45
05566-07-45200	20	45
05566-07-45220	22	45
05566-07-45240	24	45
05566-07-45260	26	45
05566-07-45280	28	45
05566-07-45320	32	45
05566-07-45500	50	45

Quarter-turn locks, stainless steel

long version

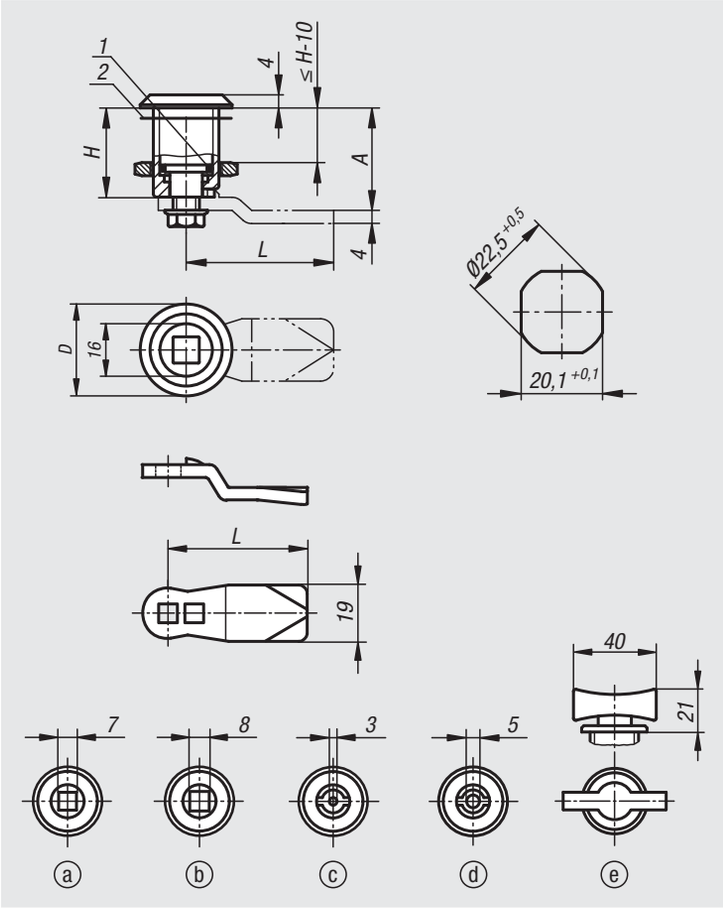

Material:
Housing, stainless steel 1.4305.
Actuation and fastening nut, stainless steel 1.4404.
Tongue 1.4301 stainless steel.

Version:
Bright.

Sample order:
nlm Quarter turn lock 05566-04-1730
nlm Tongue 05566-07-450660

Note:
The quarter turn lock can be installed pre-assembled. For right or left use. Water and dust protected acc. to IP65 from DIN EN 60529.

Please order required tongue version separately. Every tongue can be combined with every housing.

Accessories:
Lock key 05586

Drawing reference:
Actuation:
a) square 7 mm
b) square 8 mm
c) double lug 3 mm
d) double lug 5 mm
e) wing grip

1) O-ring
2) flat seal

Quarter-turn locks, stainless steel

long version

Quarter-turn locks, stainless steel, long version

Order No.	Actuation	D	H
05566-04-1730	square 7 mm	28	30
05566-04-1736	square 7 mm	28	36
05566-04-1740	square 7 mm	28	40
05566-04-1750	square 7 mm	28	50
05566-04-1760	square 7 mm	28	60
05566-04-1830	square 8 mm	28	30
05566-04-1836	square 8 mm	28	36
05566-04-1840	square 8 mm	28	40
05566-04-1850	square 8 mm	28	50
05566-04-1860	square 8 mm	28	60
05566-04-4330	double lug 3 mm	28	30
05566-04-4336	double lug 3 mm	28	36
05566-04-4340	double lug 3 mm	28	40
05566-04-4350	double lug 3 mm	28	50
05566-04-4360	double lug 3 mm	28	60
05566-04-4530	double lug 5 mm	28	30
05566-04-4536	double lug 5 mm	28	36
05566-04-4540	double lug 5 mm	28	40
05566-04-4550	double lug 5 mm	28	50
05566-04-4560	double lug 5 mm	28	60
05566-04-0030	grip	28	30
05566-04-0036	grip	28	36
05566-04-0040	grip	28	40
05566-04-0050	grip	28	50
05566-04-0060	grip	28	60

Tongue for quarter-turn lock

Order No.	A for housing length H=30	A for housing length H=36	A for housing length H=40	A for housing length H=50	A for housing length H=60	L
05566-07-45060	18	24	28	38	48	45
05566-07-45080	20	26	30	40	50	45
05566-07-45100	22	28	32	42	52	45
05566-07-45140	26	32	36	46	56	45
05566-07-45160	28	34	38	48	58	45
05566-07-45180	30	36	40	50	60	45
05566-07-45200	32	38	42	52	62	45
05566-07-45220	34	40	44	54	64	45
05566-07-45240	36	42	46	56	66	45
05566-07-45260	38	44	48	58	68	45
05566-07-45280	40	46	50	60	70	45
05566-07-45320	44	50	54	64	74	45
05566-07-45500	62	68	72	82	92	45

Quarter-turn locks

stainless steel, small version

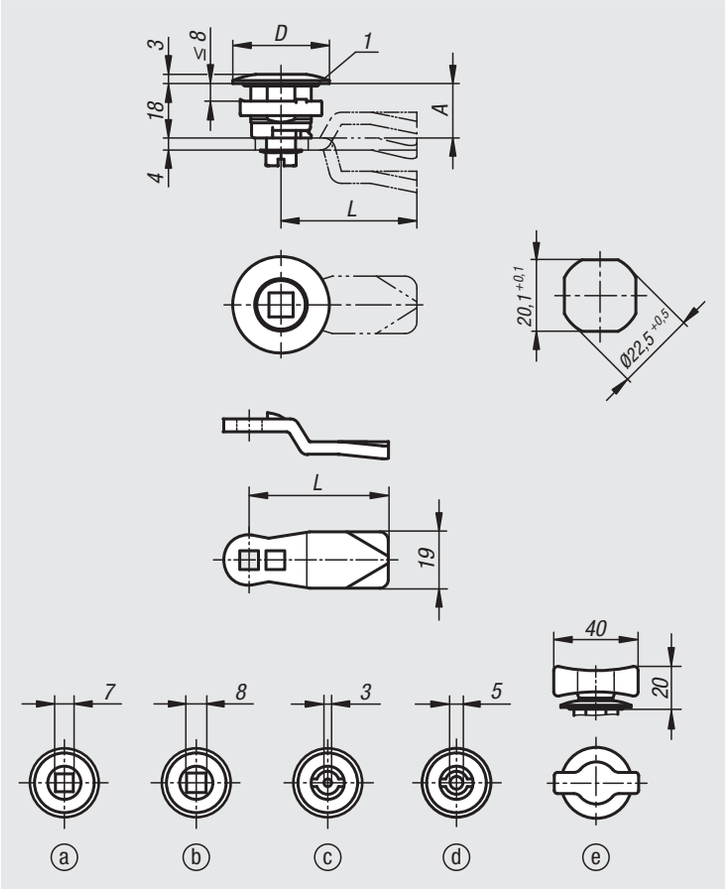

Material:
Housing and fastening nut, stainless steel 1.4404.
Actuator 1.4401.
O-ring NBR.
Tongue 1.4301 stainless steel.

Version:
Bright.

Sample order:
nlm Quarter turn lock 05566-05-1718
nlm Tongue 05566-07-450660

Note:
The quarter turn lock can be installed pre-assembled.
For right or left use.

Water and dust protected acc. to IP65 to DIN EN 60529.

Please order required tongue version separately. Every tongue can be combined with every housing.

Accessories:
Lock key 05586

Drawing reference:
Actuation:
a) square 7 mm
b) square 8 mm
c) double lug 3 mm
d) double lug 5 mm
e) wing grip

1) O-ring

Quarter-turn locks, stainless steel, small version

Order No.	Actuation	D
05566-05-1718	square 7 mm	32
05566-05-1818	square 8 mm	32
05566-05-4318	double lug 3 mm	32
05566-05-4518	double lug 5 mm	32
05566-05-0018	grip	32

Tongue for quarter-turn locks

Order No.	A	L
05566-07-45060	6	45
05566-07-45080	8	45
05566-07-45100	10	45
05566-07-45140	14	45
05566-07-45160	16	45
05566-07-45180	18	45
05566-07-45200	20	45
05566-07-45220	22	45
05566-07-45240	24	45
05566-07-45260	26	45
05566-07-45280	28	45
05566-07-45320	32	45
05566-07-45500	50	45

Quarter-turn locks

lockable, stainless steel

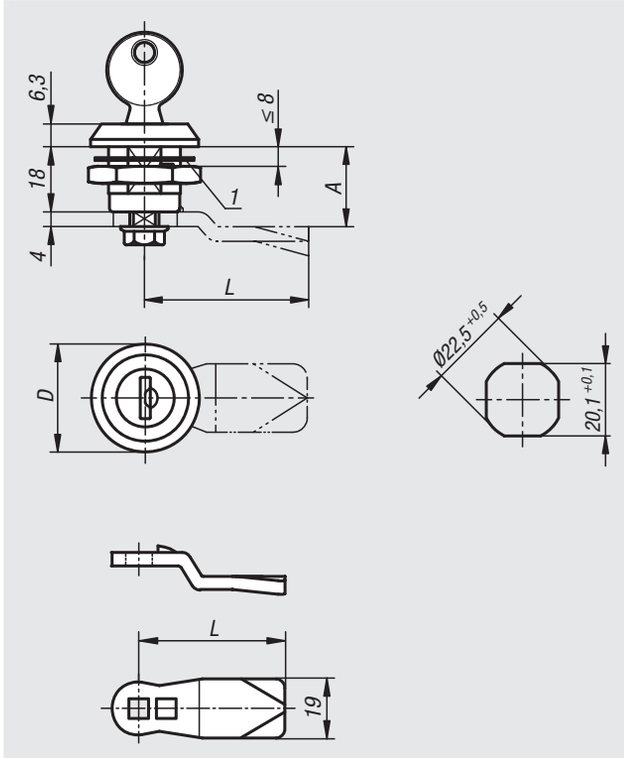

Material:
Quarter-turn lock 1.4401 stainless steel.
Tongue 1.4301 stainless steel.

Version:
Bright.

Sample order:
nlm Quarter turn lock 05566-06-18
nlm Tongue 05566-07-450660

Note:
The quarter turn lock can be installed pre-assembled. Housing with fastening nut and plate cylinder, same key locking, incl. 2 keys.

Please order required tongue version separately. Every tongue can be combined with every housing.

Drawing reference:
1) flat seal

Quarter-turn lock, lockable, stainless steel

Order No.	Actuation	D
05566-06-18	key	30

Tongue for quarter-turn lock

Order No.	A	L
05566-07-45060	6	45
05566-07-45080	8	45
05566-07-45100	10	45
05566-07-45140	14	45
05566-07-45160	16	45
05566-07-45180	18	45
05566-07-45200	20	45
05566-07-45220	22	45
05566-07-45240	24	45
05566-07-45260	26	45
05566-07-45280	28	45
05566-07-45320	32	45
05566-07-45500	50	45

Tongue for quarter-turn lock

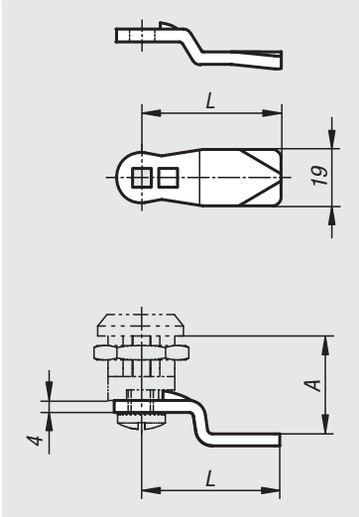

Material:
Stainless steel 1.4301.

Version:
Bright.

Sample order:
nlm 05566-07-45060

Order No.	A	A for housing length H=30	A for housing length H=36	A for housing length H=40	A for housing length H=50	A for housing length H=60	L
05566-07-45060	6	18	24	28	38	48	45
05566-07-45080	8	20	26	30	40	50	45
05566-07-45100	10	22	28	32	42	52	45
05566-07-45140	14	26	32	36	46	56	45
05566-07-45160	16	28	34	38	48	58	45
05566-07-45180	18	30	36	40	50	60	45
05566-07-45200	20	32	38	42	52	62	45
05566-07-45220	22	34	40	44	54	64	45
05566-07-45240	24	36	42	46	56	66	45
05566-07-45260	26	38	44	48	58	68	45
05566-07-45280	28	40	46	50	60	70	45
05566-07-45320	32	44	50	54	64	74	45
05566-07-45500	50	62	68	72	82	92	45

Quarter-turn locks

polyamide

Material:
Housing and actuator PA6 fibreglass reinforced plastic.
Nut die-cast zinc.
O-ring NBR, flat seal CR.
Tongue steel.

Version:
Housing and actuator black.
Nut and tongue galvanised.

Sample order:
nlm Quarter-turn lock 05567-17185
nlm Tongue 05569-145X040 (include tongue gap „A“)

Note:
Quarter-turn lock with spring-loaded tongue. Right or left mounting with 90° closing. The quarter-turn lock can be installed pre-assembled (limitations by a small A-dimension and thick doors).

Water and dust proof as per IP65 through the O-ring and flat seal.

Order required tongue version separately. Every tongue can be combined with every housing.

Accessories:
Lock key 05586

Drawing reference:
Actuation:
a) square 7 mm
b) square 8 mm
c) slot
d) double lug 3 mm
e) double lug 5 mm
f) triangle 8 mm

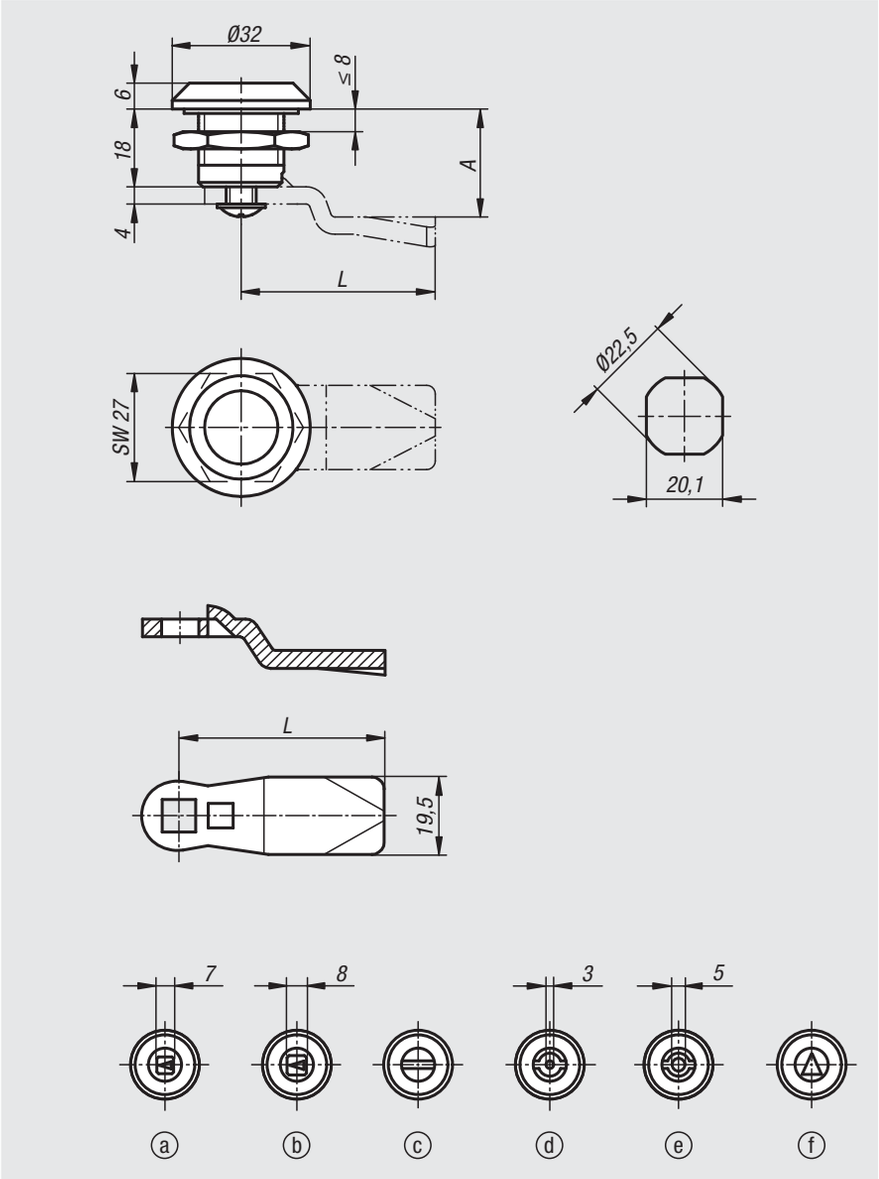

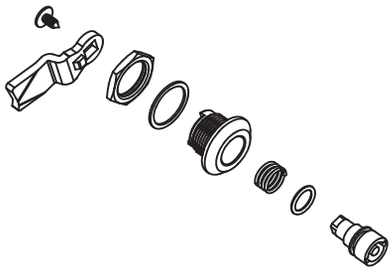

Quarter-turn locks polyamide

Order No.	Actuation
05567-17185	square 7 mm
05567-18185	square 8 mm
05567-20185	slot
05567-43185	double lug 3 mm
05567-45185	double lug 5 mm
05567-88185	triangle 8 mm

Tongue for quarter-turn lock

Order No.	A for housing length H=18	L
05569-145X	4/6/8/10/12/14/16/18/20/22/24/26/28/30/32/34/36/38/40/42	45
05569-135X	16/18/20/22/24	35

Quarter-turn locks

long version

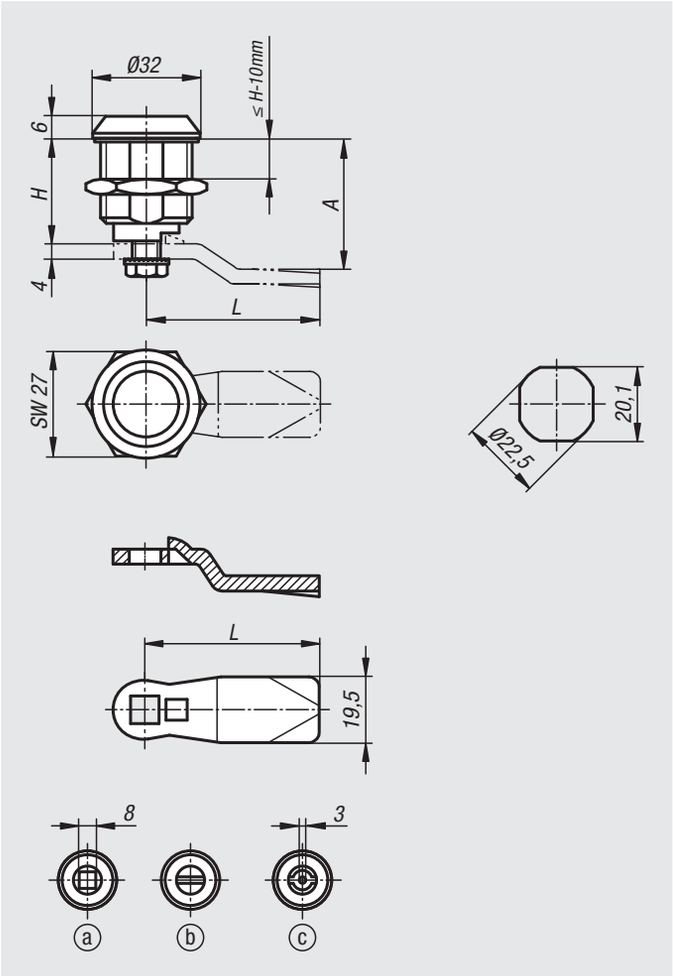

Material:
Housing and actuator die-cast zinc.
Tongue steel.

Version:
Housing and actuator chrome-plated.
Tongue galvanized.

Sample order:
nlm Quarter-turn lock 05568-18301
nlm Tongue 05569-145X040

Note:
Rating IP65. This is achieved using an additional O-ring underneath the actuator and a flat seal attached to the housing. The quarter-turn lock can be installed pre-assembled. Please order the required tongue separately. Every tongue can be combined with this housing.

Drawing reference:
Actuation:
a) square 8 mm
b) slot
c) double lug 3 mm

Quarter-turn locks

long version

Quarter-turn lock, long version

Order No.	H	Actuation
05568-18301	30	square 8 mm
05568-40301	30	double lug 3 mm
05568-20301	30	slot
05568-18401	40	square 8 mm
05568-40401	40	double lug 3 mm
05568-20401	40	slot
05568-18501	50	square 8 mm
05568-40501	50	double lug 3 mm
05568-20501	50	slot

Tongue for quarter-turn lock

Order No.	A for housing length H=30	A for housing length H=40	A for housing length H=50	L
05569-145X040	16	26	36	45
05569-145X060	18	28	38	45
05569-145X080	20	30	40	45
05569-145X100	22	32	42	45
05569-145X120	24	34	44	45
05569-145X140	26	36	46	45
05569-145X160	28	38	48	45
05569-145X180	30	40	50	45
05569-145X200	32	42	52	45
05569-145X220	34	44	54	45
05569-145X240	36	46	56	45
05569-145X260	38	48	58	45
05569-145X280	40	50	60	45
05569-145X300	42	52	62	45
05569-145X320	44	54	64	45
05569-145X340	46	56	66	45
05569-145X360	48	58	68	45
05569-145X380	50	60	70	45
05569-145X400	52	62	72	45
05569-145X420	54	64	74	45

Quarter-turn locks

with wing grip

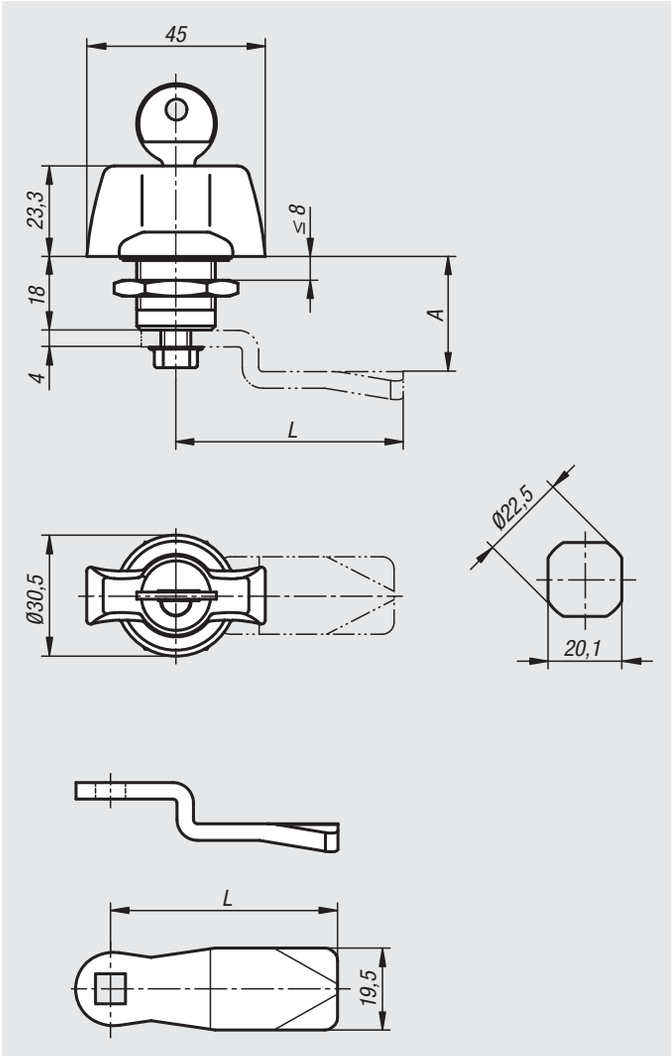

Material:
Housing, actuator and nut die-cast zinc.
O-ring NBR, flat seal CR.
Tongue steel.

Version:
Housing chromed.
Actuator chromed or black powder-coated.
Nut and tongue galvanised.

Sample order:
nlm Quarter-turn lock 05571-1181
nlm Tongue 05570-145X040 (include tongue gap “A”)

Note:
For right or left mounting with 90° closing and internal rotation limit. The quarter-turn lock can be installed pre-assembled (limitations by a small A-dimension and thick doors). The fastening nut is an earthing nut with teeth one side.

Dust and waterproof as per IP65 through an O-ring and flat seal.

The lockable quarter-turn locks are each supplied with 2 keys. The key can be removed in both positions (open and closed). The locks are keyed alike, i.e. they can all be opened using the same key (lock type 101 or 1333).

Please order required tongue version separately. Every tongue can be combined with every housing.

Accessories:
Lock key 05586

Quarter-turn locks with wing grip

Order No.	Surface	Actuation	Version
05571-1181	chromed	grip	-
05571-2181	chromed	lockable grip	lock 101
05571-3181	chromed	lockable grip	lock 1333
05571-1182	black powder-coated	grip	-
05571-2182	black powder-coated	lockable grip	lock 101
05571-3182	black powder-coated	lockable grip	lock 1333

Tongue for quarter-turn locks

Order No.	A	L
05570-145X	4/6/8/10/12/14/16/18/20/22/24/26/28/30/32/34/36/38/40/42/44/46/48/50	45
05570-135X	16/18/20/22/24	35

Quarter-turn locks stainless steel

with T-grip

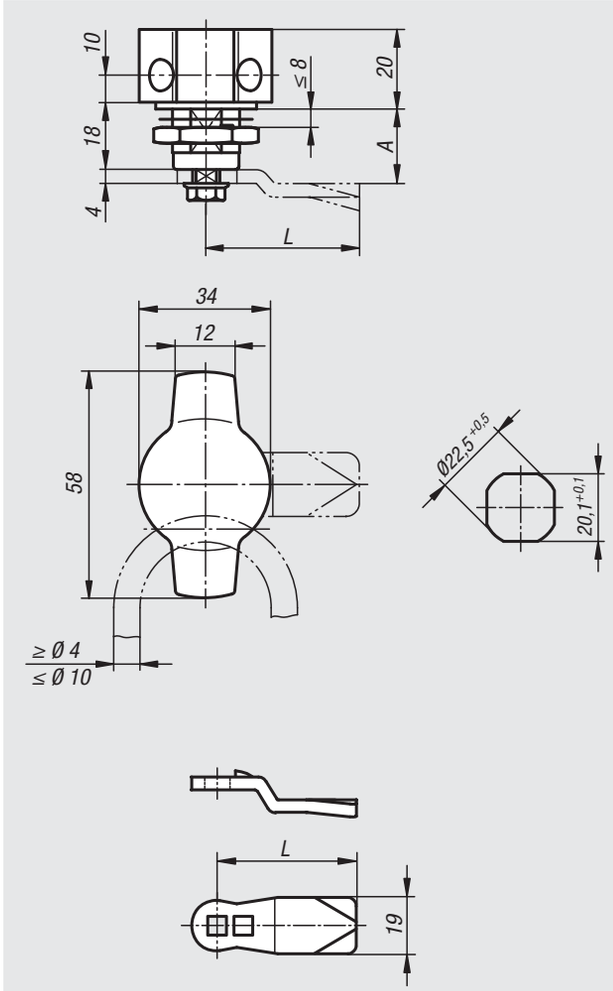

Material:
Quarter-turn lock 1.4401 stainless steel.
Tongue 1.4301 stainless steel.

Version:
Bright.
Grip polished.

Sample order:
nlm Quarter turn lock 05571-02-18
nlm Tongue 05566-07-450660

Note:
Quarter-turn lock with T-grip. Right or left deployment. The lock can be installed pre-assembled.

Water and dust tight according to IP65.

Please order the desired tongue type separately. Every tongue can be combined with every housing.

Quarter-turn lock, stainless steel with T-grip

Order No.	Actuation
05571-02-18	T-Grip

Tongue for quarter-turn lock

Order No.	A	L
05566-07-45060	6	45
05566-07-45080	8	45
05566-07-45100	10	45
05566-07-45140	14	45
05566-07-45160	16	45
05566-07-45180	18	45
05566-07-45200	20	45
05566-07-45220	22	45
05566-07-45240	24	45
05566-07-45260	26	45
05566-07-45280	28	45
05566-07-45320	32	45
05566-07-45500	50	45

Quarter-turn locks

with T-grip

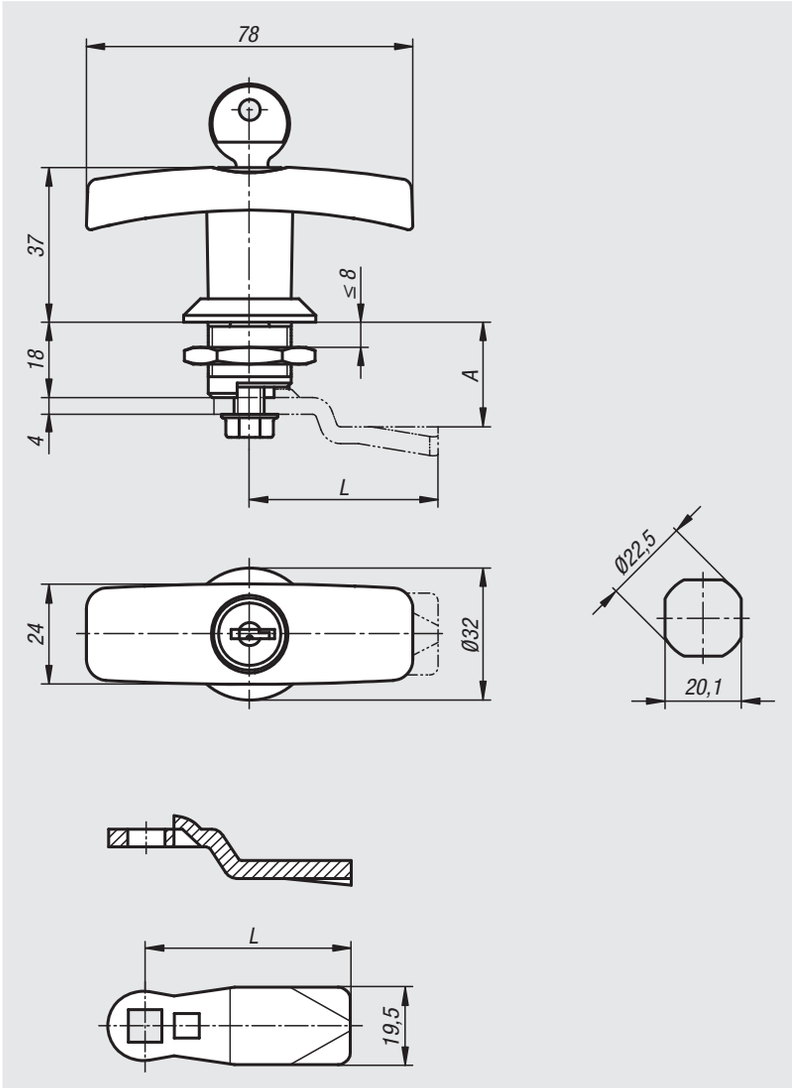

Material:
Housing, actuator and nut die-cast zinc.
O-ring NBR, flat seal CR.
Tongue steel.

Version:
Housing chromed.
Actuator black powder-coated.
Nut and tongue galvanised.

Sample order:
nlm Quarter-turn lock 05572-1182
nlm Tongue 05569-145X040 (include tongue gap “A”)

Note:
Right or left mounting with 90° closing. The quarter-turn lock can be installed pre-assembled (limitations by a small A-dimension and thick doors). The fastening nut has claws allowing it to be used as an earthing nut.

Water and dust proof as per IP65 through the O-ring and flat seal.

The lockable quarter-turn locks are supplied with 2 keys. The key can be removed in both positions (open and closed). The cylinder locks have a single-key system, i.e. the same key works in all locks (lock type 101 or 1333).

Order required tongue version separately. Every tongue can be combined with every housing.

Accessories:
Lock key 05586

Quarter-turn locks with T-grip

Order No.	Actuation	Version
05572-1182	T-Grip	-
05572-2182	lockable T-grip	lock 101
05572-3182	lockable T-grip	lock 1333

Tongue for quarter-turn lock

Order No.	A for housing length H=18	L
05569-145X	4/6/8/10/12/14/16/18/20/22/24/26/28/30/32/34/36/38/40/42	45
05569-135X	16/18/20/22/24	35

Quarter-turn locks

with L-grip

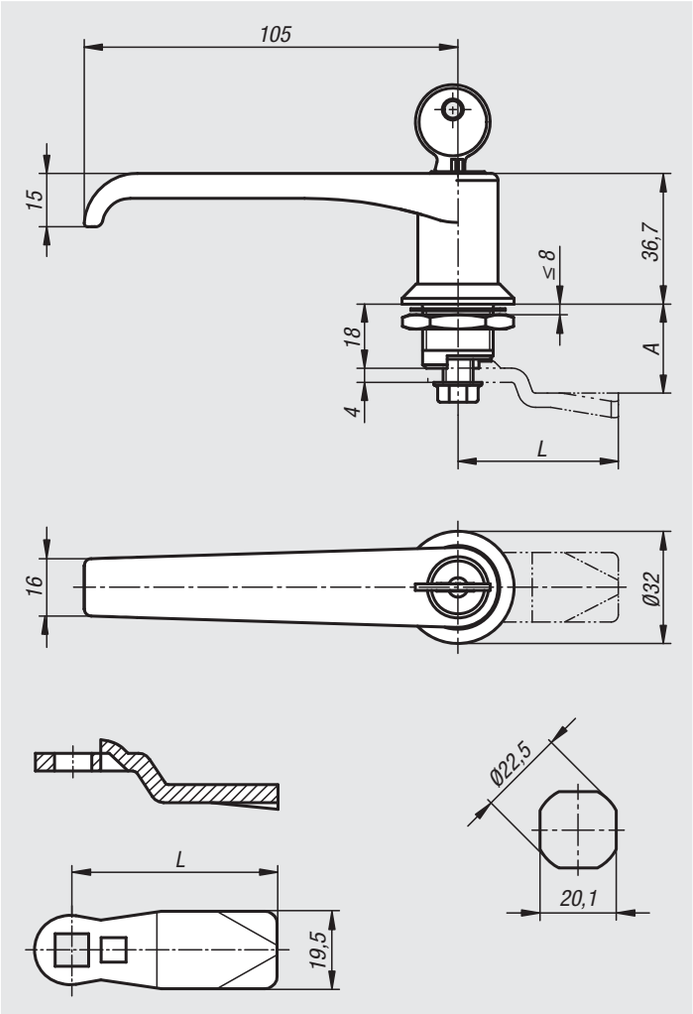

Material:
Housing, actuator and nut die-cast zinc.
O-ring NBR, flat seal CR.
Tongue steel.

Version:
Housing and actuator, black, powder-coated.
Nut and tongue, galvanised.

Sample order:
nlm Quarter-turn lock 05573-1182
nlm Tongue 05569-145X040 (include tongue gap “A”)

Note:
Right or left mounting with 90° closing. The quarter-turn lock can be installed pre-assembled (limitations by a small A-dimension and thick doors). The fastening nut has claws allowing it to be used as an earthing nut.

Water and dust proof as per IP65 through the O-ring and flat seal.

The lockable quarter-turn locks are supplied with 2 keys. The key can be removed in both positions (open and closed). The cylinder locks have a single-key system, i.e. the same key works in all locks (lock type 101 or 1333).

Order required tongue version separately. Every tongue can be combined with every housing.

Accessories:
Lock key 05586

Quarter-turn locks with L-grip

Order No.	Actuation	Version
05573-1182	L-grip	-
05573-2182	lockable L-grip	lock 101
05573-3182	lockable L-grip	lock 1333

Tongue for quarter-turn lock

Order No.	A for housing length H=18	L
05569-145X	4/6/8/10/12/14/16/18/20/22/24/26/28/30/32/34/36/38/40/42	45
05569-135X	16/18/20/22/24	35

Compression latches

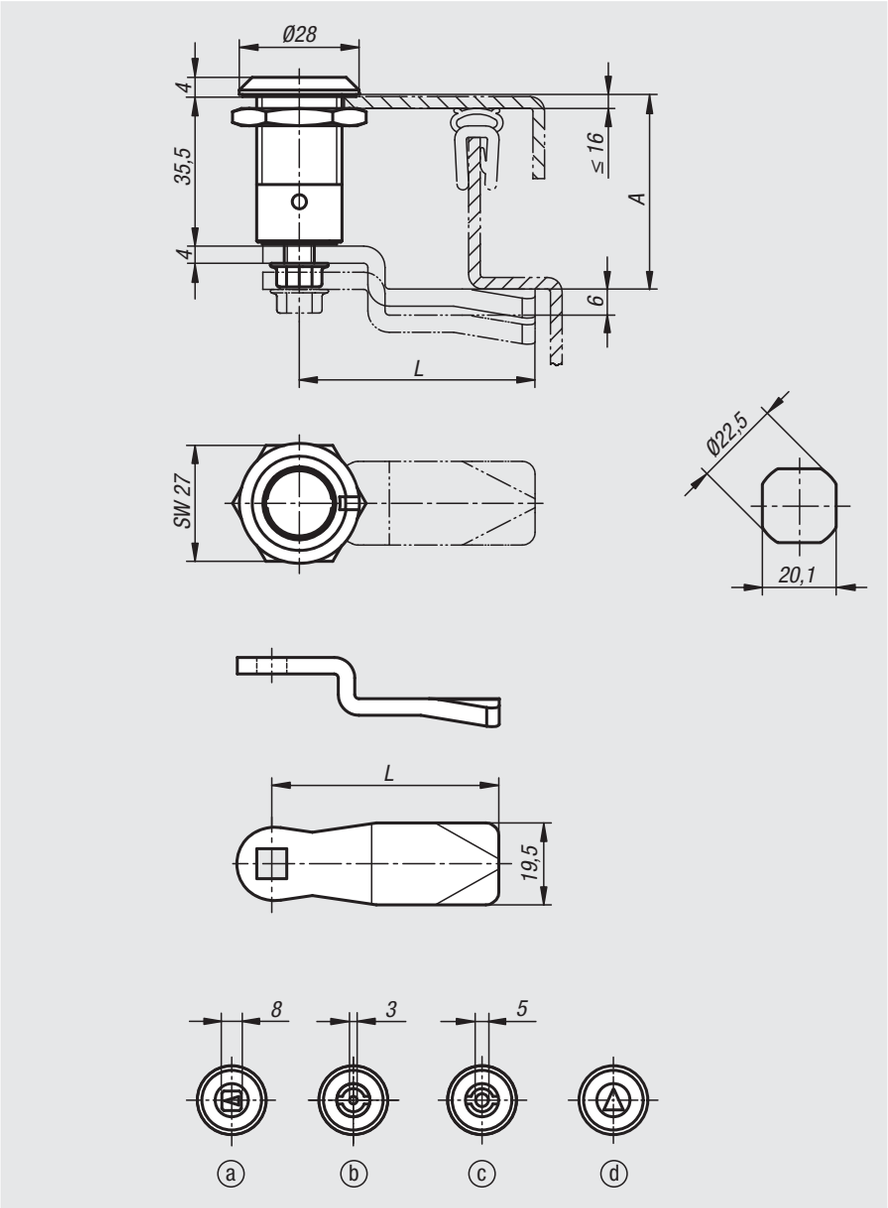

Material:
Housing, actuator and nut die-cast zinc.
Flat seal CR.
Tongue steel.

Version:
Housing and actuator chromed.
Nut and tongue galvanised.

Sample order:
nlm Quarter-turn lock 05574-18351
nlm Tongue 05570-145X040 (include tongue gap “A”)

Note:
Compression quarter-turn locks are primarily used for doors and housings that require a higher pressure force on the seal. For right or left use. The locking process is always clockwise. The quarter-turn lock can be installed pre-assembled. Vibration-resistant thanks to spring-loaded detent mechanism in the „locked“ end position. Tested according to DIN EN 60068-2-64 (vibration) and DIN EN 60068-2-27 (shock), test standard 61373. Vibration-proof as per the requirements for rail applications category 1, class B (=highest requirement).

Water and dustproof as per IP65.

Please order required tongue version separately. Every tongue can be combined with every housing.

Function:
Turning the actuator clockwise rotates the tongue 90° and brings it into the closed position. A further 90° rotation pulls the tongue in, increasing the pressure on the frame. The axial travel is 6 mm. With marking on housing for “locked” position.

Accessories:
Lock key 05586

Drawing reference:
Actuation:
a) square 8 mm
b) double lug 3 mm
c) double lug 5 mm
d) triangle 8 mm

Compression latches

Order No.	Actuation
05574-18351	square 8 mm
05574-43351	double lug 3 mm
05574-45351	double lug 5 mm
05574-88351	triangle 8 mm

Tongue for quarter-turn lock

Order No.	A	L
05570-145X	4/6/8/10/12/14/16/18/20/22/24/26/28/30/32/34/36/38/40/42/44/46/48/50	45
05570-135X	16/18/20/22/24	35

Compression latches

with adjustable tongue height

Material:
Housing, actuator and nut die-cast zinc.
Flat seal CR.
Tongue steel.

Version:
Housing and actuator chromed.
Nut and tongue galvanised.

Sample order:
nlm Quarter-turn lock 05575-18351
nlm Tongue 05570-145X040 (include tongue gap “A”)

Note:
Compression quarter-turn locks are primarily used for doors and housings that require a higher pressure force on the seal. For right or left use. The locking process is always clockwise. The quarter-turn lock can be installed pre-assembled. Vibration-resistant thanks to spring-loaded detent mechanism in the “locked” end position. Tested according to DIN EN 60068-2-64 (vibration) and DIN EN 60068-2-27 (shock), test standard 61373. Vibration-proof as per the requirements for rail applications category 1, class B (=highest requirement).

Water and dustproof as per IP65.

Please order required tongue version separately. Every tongue can be combined with every housing.

Function:
Turning the actuator clockwise rotates the tongue 90° and brings it into the closed position. A further 90° rotation pulls the tongue in, increasing the pressure on the frame. The axial travel is 6 mm. With marking on housing for “locked” position.

Accessories:
Lock key 05586

Drawing reference:
Actuation:
a) square 8 mm
b) double lug 3 mm
c) double lug 5 mm
d) triangle 8 mm

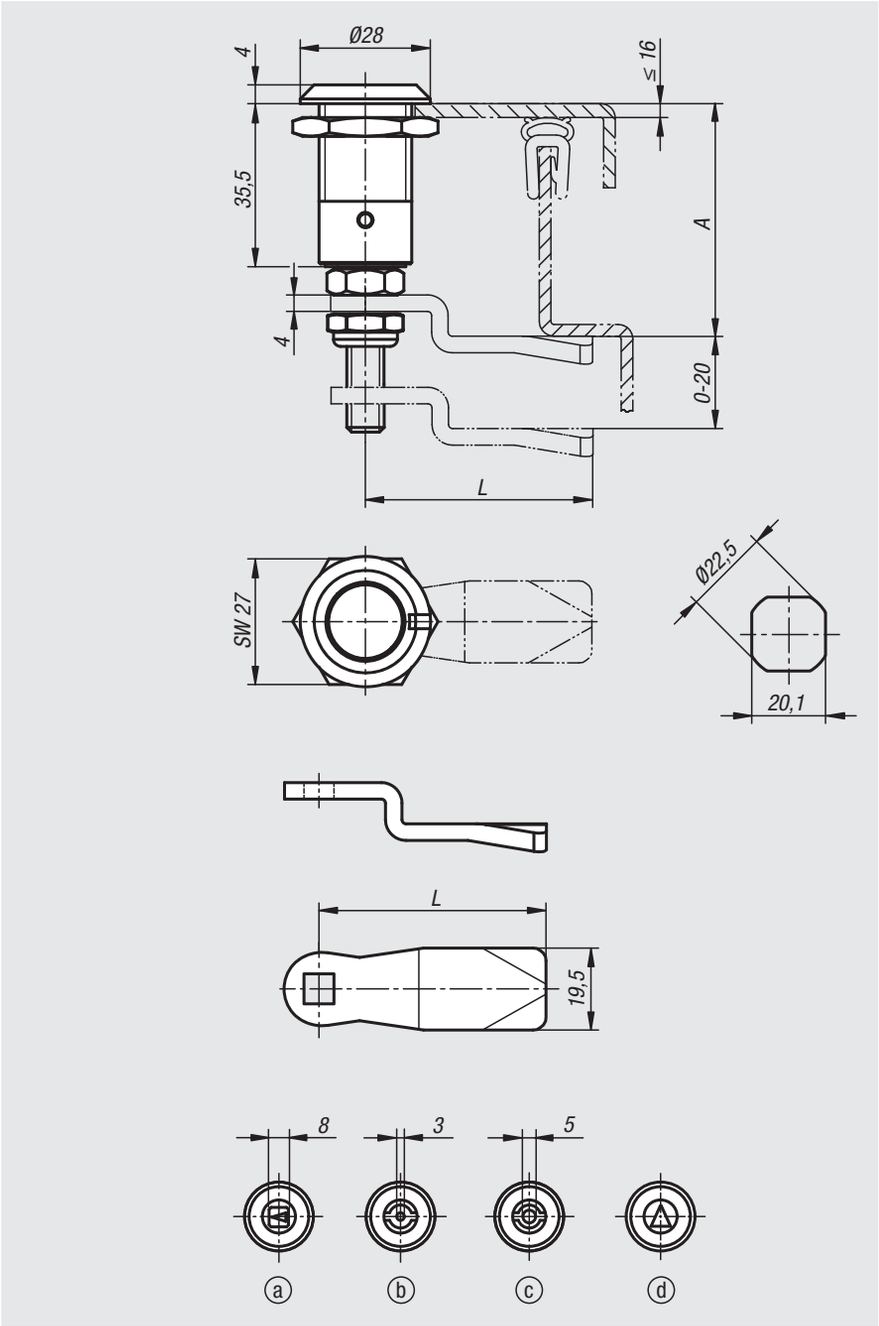

Compression latches with adjustable tongue gap

Order No.	Actuation
05575-18351	square 8 mm
05575-43351	double lug 3 mm
05575-45351	double lug 5 mm
05575-88351	triangle 8 mm

Tongue for quarter-turn lock

Order No.	A	L
05570-145X	4/6/8/10/12/14/16/18/20/22/24/26/28/30/32/34/36/38/40/42/44/46/48/50	45
05570-135X	16/18/20/22/24	35

Quarter-turn locks

with cam tongue

Material:
Housing, actuator and tongue die-cast zinc.
Nut steel.
Flat seal rubber.

Version:
Housing and actuator chromed .
Tongue blank.
Nut galvanised.

Sample order:
nlm 05576-17301

Note:
Quarter-turn locks with stepped cam are primarily used for doors and housings that require a higher pressure force on the seal. For right or left use. The locking process is always clockwise. The compression gap can be increased incrementally up to 9.5 mm at a maximum turning angle of 270° by turning the actuator clockwise.

Protected from water and dust to IP65.

Accessories:
Lock key 05586

Drawing reference:
Actuation:
a) square 7 mm
b) double lug 3 mm
c) double lug 5 mm

1) O-ring
2) Adapter

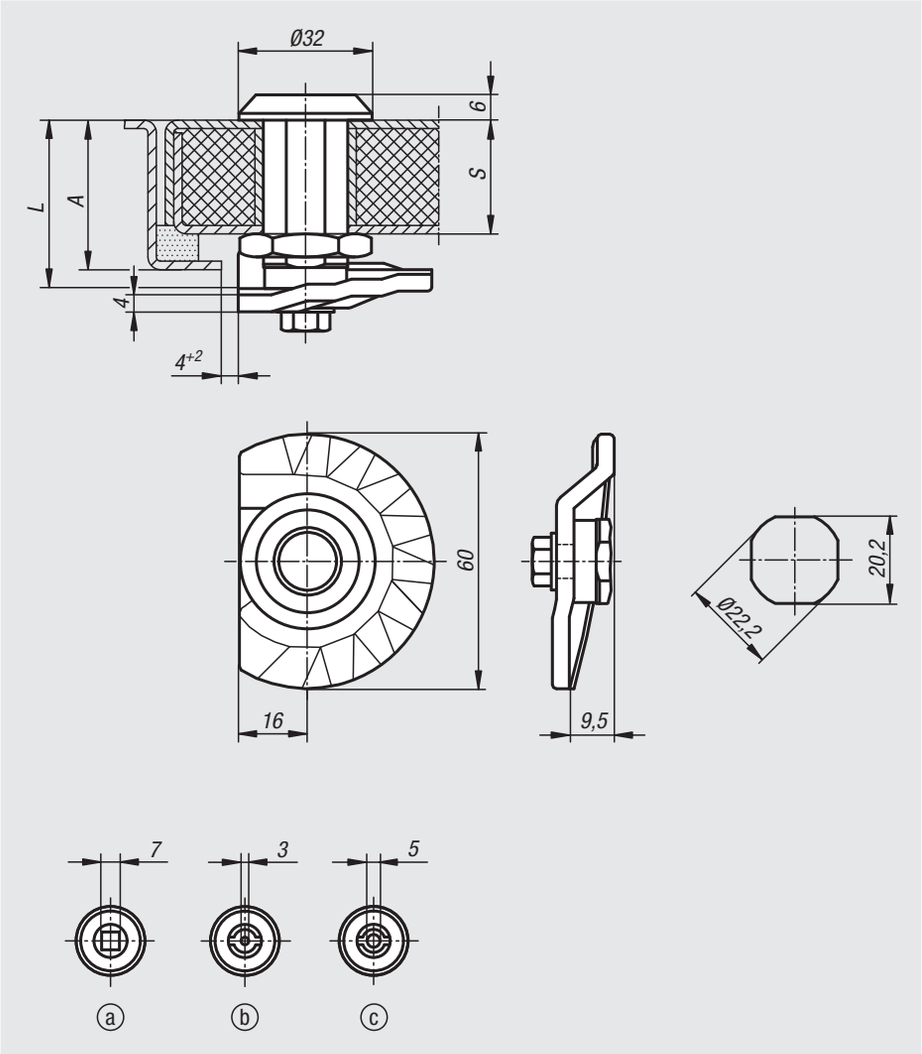

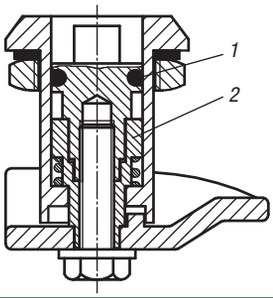

Order No.	Actuation	A	L	S max.
05576-17301	square 7 mm	30 -9,5	30	20
05576-17401	square 7 mm	40 -9,5	40	30
05576-17501	square 7 mm	50 -9,5	50	40
05576-17601	square 7 mm	60 -9,5	60	50
05576-43301	double lug 3 mm	30 -9,5	30	20
05576-43401	double lug 3 mm	40 -9,5	40	30
05576-43501	double lug 3 mm	50 -9,5	50	40
05576-43601	double lug 3 mm	60 -9,5	60	50
05576-45301	double lug 5 mm	30 -9,5	30	20
05576-45401	double lug 5 mm	40 -9,5	40	30
05576-45501	double lug 5 mm	50 -9,5	50	40
05576-45601	double lug 5 mm	60 -9,5	60	50

Quarter-turn locks

free-turning

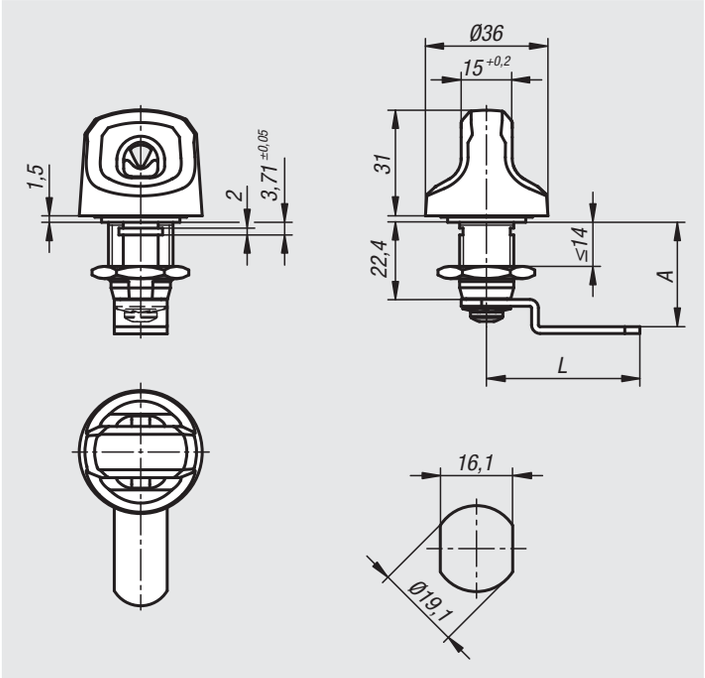

Material:
Housing and actuator die-cast zinc.
Nut brass.
Tongue steel.

Version:
Housing galvanised and blue passivated.
Lever black KTL coated.
Tongue galvanised.

Sample order:
nlm 05577-22224

Note:
Particularly suitable for steel cabinets, lockers in changing rooms, schools, leisure facilities and industrial companies.

Method of operation:
The integrated free-turning function provides higher security against violent actuation compared to conventional locks.

Assembly:
The quarter-turn lock can be installed pre-assembled.

Attention:
Optimum functionality is guaranteed with padlocks with a shackle diameter of Ø6 – Ø8 mm.

Order No.	A	L
05577-22224	22,4	44
05577-22248	24,8	42
05577-22304	30,4	45
05577-22359	35,9	49
05577-22424	42,4	45

Quarter-turn security locks, stainless steel

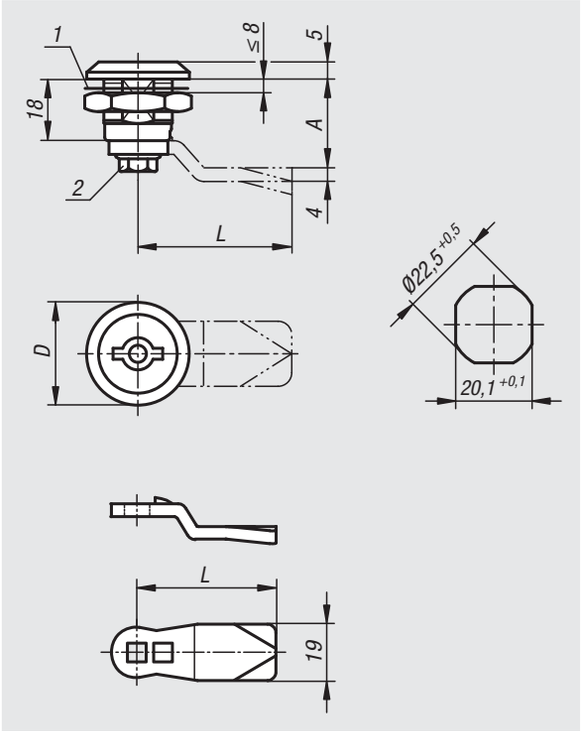

Material:
Quarter-turn lock 1.4401 stainless steel.
Tongue 1.4301 stainless steel.

Version:
Bright.

Sample order:
nlm Quarter turn lock 05578-02-14518
nlm Tongue 05566-07-450660

Note:
The secure quarter turn lock is shock and vibration-resistant acc. to DIN 43668 even under high pressing force due to a built-in restrictor element. Actuation without a suitable key is not possible. The key can be removed only in the locked position. quarter turn lock, pre-assembled. Right version = closes anti-clockwise. Left version = closes clockwise. Water and dust protected acc. to IP65 from DIN EN 60529.

Please order required tongue version separately. Every tongue can be combined with every housing.

Accessories:
Lock key 05586

Drawing reference:
1) flat seal
2) self-locking screw

Quarter-turn security locks, stainless steel

Order No.	Version	Actuation	D
05578-02-14518	right	double lug 5 mm	30
05578-02-24518	left	double lug 5 mm	30

Tongue for quarter-turn lock

Order No.	A	L
05566-07-45060	6	45
05566-07-45080	8	45
05566-07-45100	10	45
05566-07-45140	14	45
05566-07-45160	16	45
05566-07-45180	18	45
05566-07-45200	20	45
05566-07-45220	22	45
05566-07-45240	24	45
05566-07-45260	26	45
05566-07-45280	28	45
05566-07-45320	32	45
05566-07-45500	50	45

Dust caps

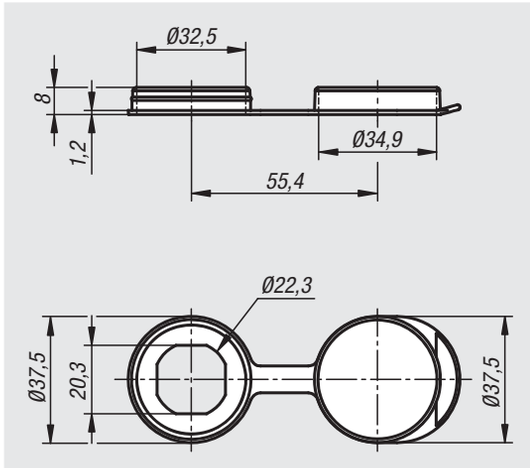

Material:
Plastic PP.

Version:
black.

Sample order:
nlm 05584-202232

Note:
Dust caps for compression latches with a head diameter up to max. 32 mm. It offers increased protection from dust and moisture. If the dust cap is used, dimension “A” of the compression latch is reduced by 1 mm.

Order No.	Description
05584-202232	Cap

Opening grips

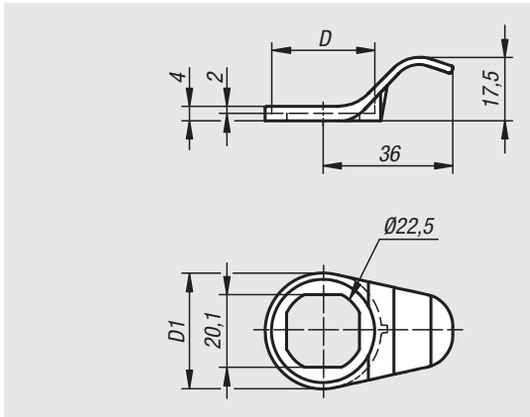

Material:
Plastic PA6, fibreglass reinforced.

Version:
black.

Sample order:
nlm 05585-202228

Note:
Practical opening handle for quarter-turn locks with a head diameter of max. 32 mm. Where the opening handle is used, dimension “A” of the quarter-turn lock is reduced by 2 mm.

Order No.	D max.	D1
05585-202228	28,5	32
05585-202232	32,5	36

Keys

for quarter-turn locks

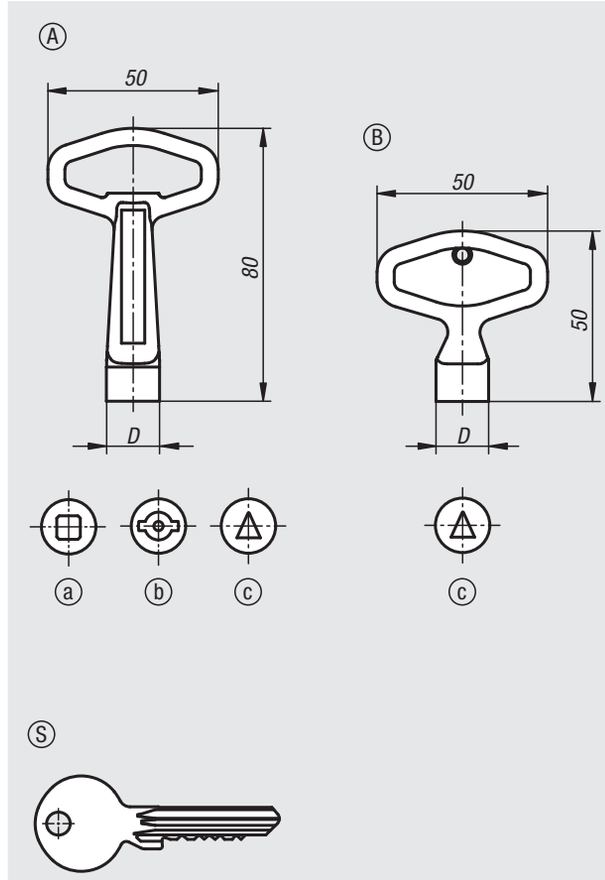

Material:
Form A and Form B die-cast zinc.
Form S steel.

Version:
Form A and Form B galvanised.
Form S nickel-plated.

Sample order:
nlm 05586-16

Note:
Keys for actuating quarter-turn locks.
Form S are supplied in pairs.

Drawing reference:
a) square
b) double lug
c) triangle

Order No.	Form	Version	D
05586-16	A	square 6 mm	11,6
05586-17	A	square 7 mm	15,5
05586-18	A	square 8 mm	15,5
05586-88	A	triangle 8 mm	15,5
05586-43	A	double lug 3 mm	15,5
05586-45	A	double lug 5 mm	15,5
05586-865	B	triangle 6.5 mm	11,6
05586-2233	S	lock 2233	-
05586-1333	S	lock 1333	-
05586-101	S	lock 101	-

Quarter-turn locks

stainless steel

Material:
Quarter-turn lock 1.4305 stainless steel.
Tongue 1.4301 stainless steel.

Version:
Bright.

Sample order:
nlm Quarter turn lock 05587-40186
nlm Tongue 05569-245X180

Note:
Rating IP65. This is achieved using an additional O-ring underneath the actuator and a PUR seal foamed onto the housing. The quarter-turn lock can be installed pre-assembled. Please order the required tongue separately. Every tongue can be combined with this housing.

Drawing reference:
Actuation:
a) square 8 mm
b) slot
c) double lug 5 mm

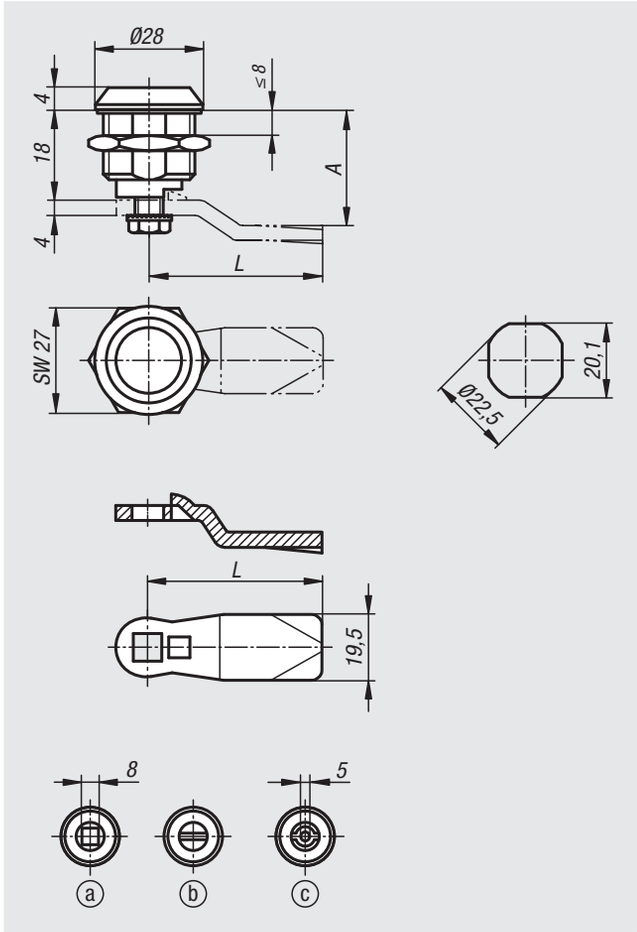

Quarter-turn locks, stainless steel

Order No.	Actuation
05587-18186	square 8 mm
05587-20186	slot
05587-40186	double lug 5 mm

Tongue for quarter-turn lock

Order No.	A for housing length H=18	L
05569-245X180	18	45
05569-245X200	20	45
05569-245X240	24	45
05569-245X280	28	45
05569-245X320	32	45
05569-245X340	34	45
05569-245X360	36	45
05569-245X380	38	45
05569-245X400	40	45
05569-245X420	42	45

Quarter-turn locks

stainless steel, lockable

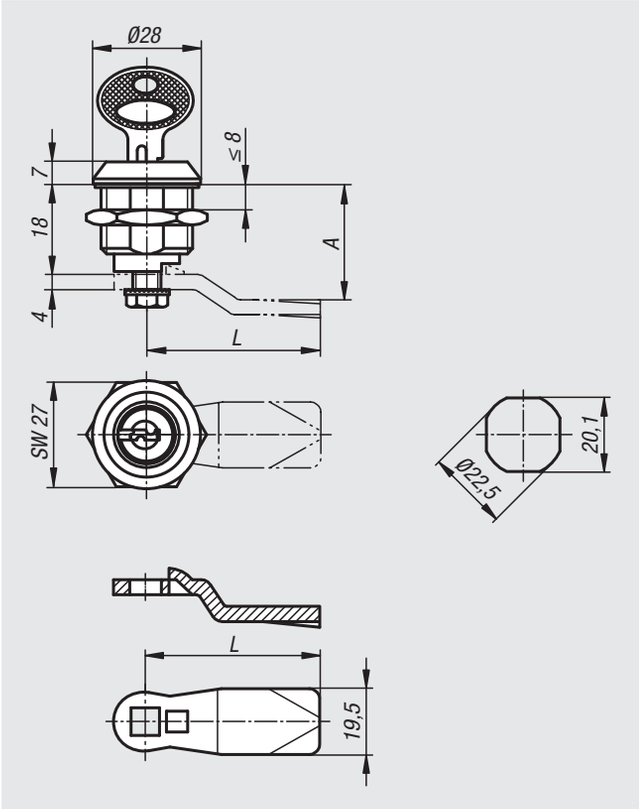

Material:
Quarter-turn lock 1.4401 stainless steel.
Tongue 1.4301 stainless steel.

Version:
Bright.

Sample order:
nlm Quarter turn lock 05588-186
nlm Tongue 05569-245X180

Note:
Lockable quarter-turn lock for right or left mounting with 90° closing. The quarter-turn lock can be installed pre-assembled. Please order required tongue separately. Every tongue can be combined with this housing.

These lockable quarter-turn locks are each supplied with 2 keys. The key can be removed in both the closed and open position. The cylinder locks have a single-key system i.e. the same key works in all locks.

Quarter-turn lock, lockable, stainless steel

Order No.	Actuation
05588-186	key

Tongue for quarter-turn lock

Order No.	A for housing length H=18	L
05569-245X180	18	45
05569-245X200	20	45
05569-245X240	24	45
05569-245X280	28	45
05569-245X320	32	45
05569-245X340	34	45
05569-245X360	36	45
05569-245X380	38	45
05569-245X400	40	45
05569-245X420	42	45

Quarter-turn locks

stainless steel with wing grip

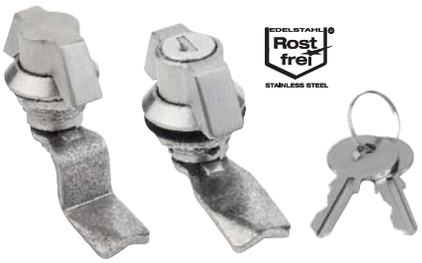

Material:
Quarter-turn lock 1.4401 stainless steel.
Tongue 1.4301 stainless steel.

Version:
Bright.

Sample order:
nlm Quarter turn lock 05589-1186
nlm Tongue 05569-245X180

Note:
Quarter-turn lock with wing grip. For right or left mounting with 90° closing. The quarter-turn lock can be installed pre-assembled. Supplied with standard stainless-steel nut. The lockable quarter-turn locks are each supplied with 2 keys. Please order the required tongue separately. Every tongue can be combined with this housing.

The key can be removed in both the closed and open position. The cylinder locks have a single-key system i.e. the same key works in all locks.

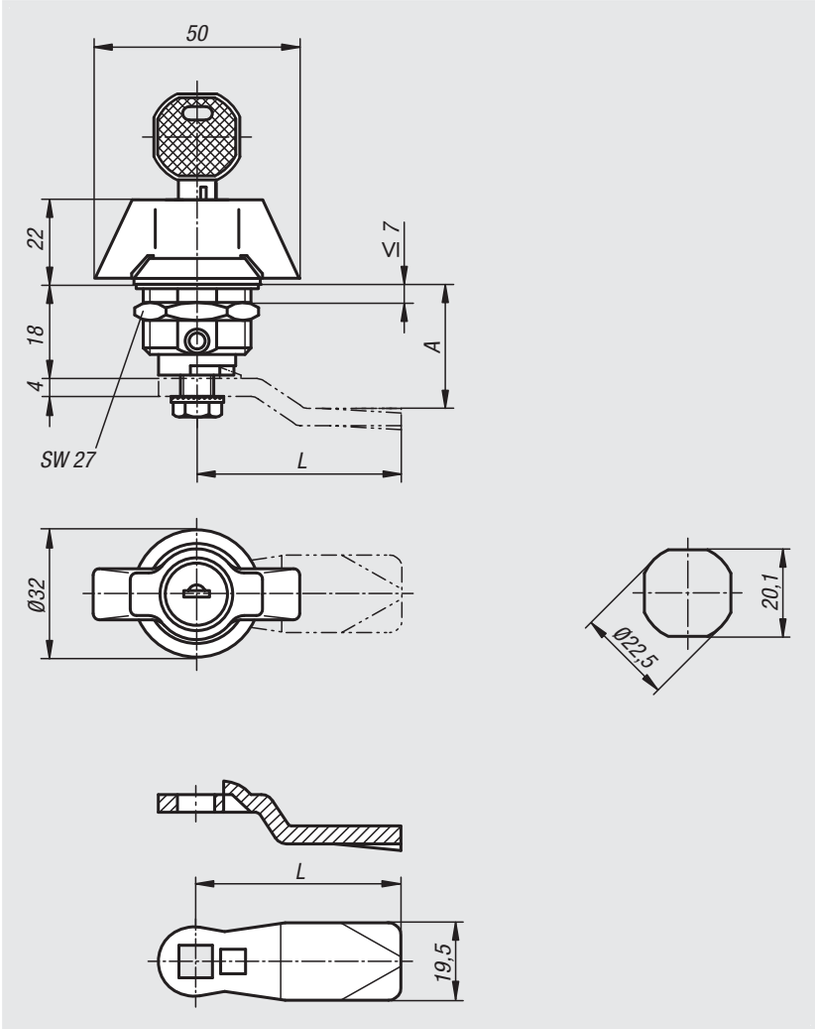

Quarter-turn lock, stainless steel with wing grip

Order No.	Actuation
05589-1186	grip
05589-2186	lockable grip

Tongue for quarter-turn lock

Order No.	A for housing length H=18	L
05569-245X180	18	45
05569-245X200	20	45
05569-245X240	24	45
05569-245X280	28	45
05569-245X320	32	45
05569-245X340	34	45
05569-245X360	36	45
05569-245X380	38	45
05569-245X400	40	45
05569-245X420	42	45

Quarter-turn locks

stainless steel with T-grip

Material:
Grip 1.4301 stainless steel.
Housing and nut 1.4305 stainless steel.
Tongue 1.4301 stainless steel.

Version:
Bright.

Sample order:
nlm Quarter turn lock 05593-1186
nlm Tongue 05569-245X180

Note:
Quarter-turn lock with T-grip. For right or left mounting with 90° closing. The quarter-turn lock can be installed pre-assembled. Supplied with standard stainless-steel nut. The lockable quarter-turn locks are each supplied with 2 keys. Rating IP65. Please order required tongue version separately. Every tongue can be combined with this housing.

The key can be removed in both the closed and open position. The cylinder locks have a single-key system i.e. the same key works in all locks.

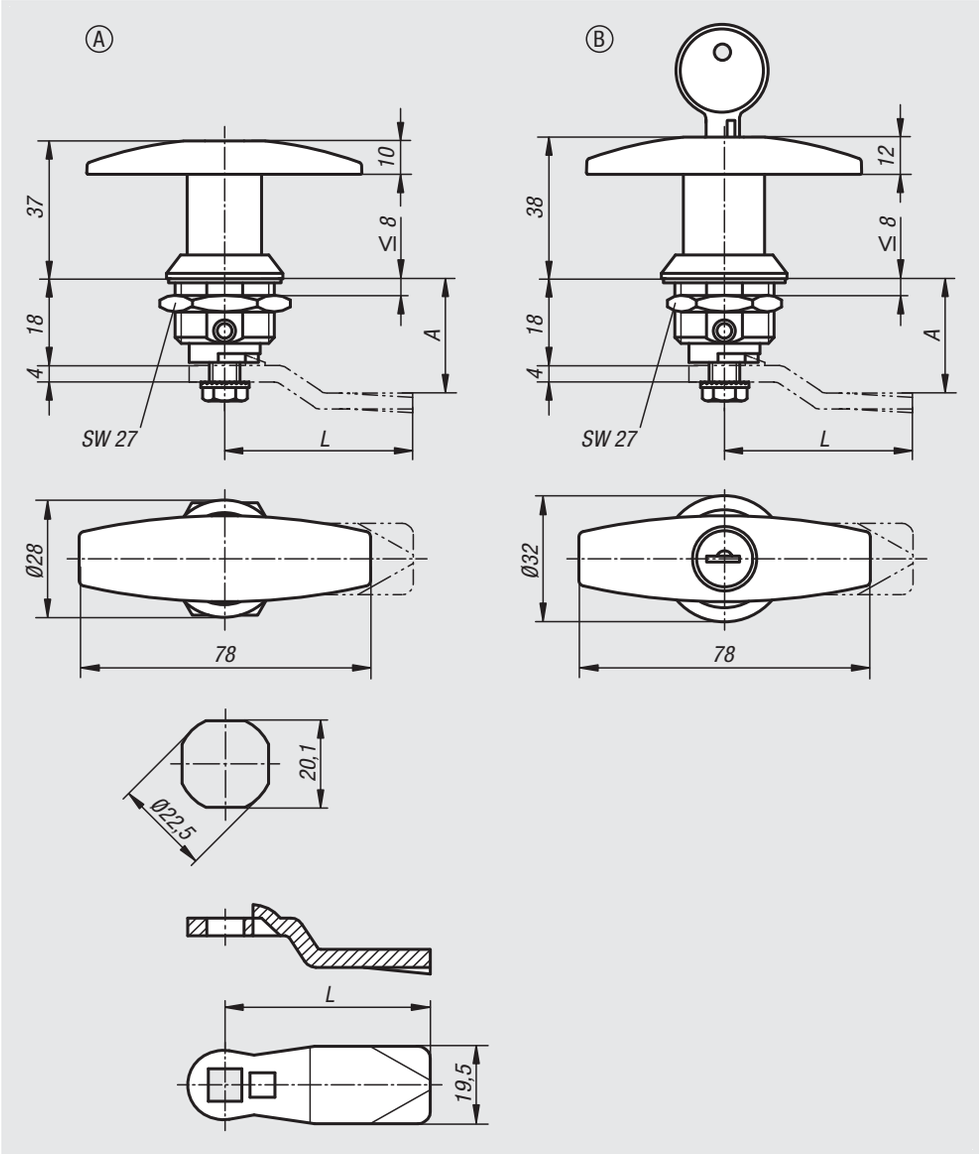

Quarter-turn lock, stainless steel with T-grip

Order No.	Form	Actuation
05593-1186	A	T-Grip
05593-2186	B	lockable T-grip

Tongue for quarter-turn lock

Order No.	A for housing length H=18	L
05569-245X180	18	45
05569-245X200	20	45
05569-245X240	24	45
05569-245X280	28	45
05569-245X320	32	45
05569-245X340	34	45
05569-245X360	36	45
05569-245X380	38	45
05569-245X400	40	45
05569-245X420	42	45

Quarter-turn locks

stainless steel with T-grip

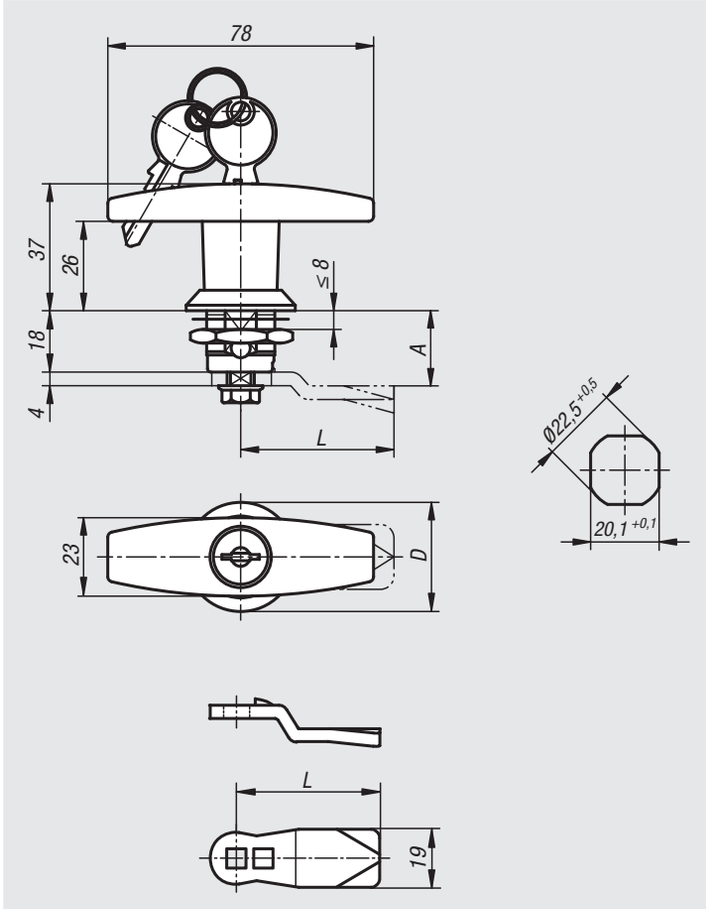

Material:
Quarter-turn lock 1.4401 stainless steel.
Tongue 1.4301 stainless steel.

Version:
Bright.
Grip polished.

Sample order:
nlm Quarter turn lock 05593-01-1186
nlm Tongue 05566-07-450660

Note:
Quarter-turn lock with T-grip. For right or left mounting with 90° closing. The quarter-turn lock can be installed pre-assembled. Supplied with standard stainless-steel nut. The lockable quarter-turn locks are each supplied with 2 keys. Rating IP65. Please order required tongue version separately. Every tongue can be combined with this housing.

The cylinder locks have a single-key system i.e. the same key works in all locks.

On request:
Available for door thickness 20 and 40 mm.

Quarter-turn lock, stainless steel with T-grip

Order No.	Actuation	D
05593-01-1186	T-Grip	32
05593-01-2186	lockable T-grip	32

Tongue for quarter-turn lock

Order No.	A	L
05566-07-45060	6	45
05566-07-45080	8	45
05566-07-45100	10	45
05566-07-45140	14	45
05566-07-45160	16	45
05566-07-45180	18	45
05566-07-45200	20	45
05566-07-45220	22	45
05566-07-45240	24	45
05566-07-45260	26	45
05566-07-45280	28	45
05566-07-45320	32	45
05566-07-45500	50	45

Quarter-turn locks

stainless steel with L-grip

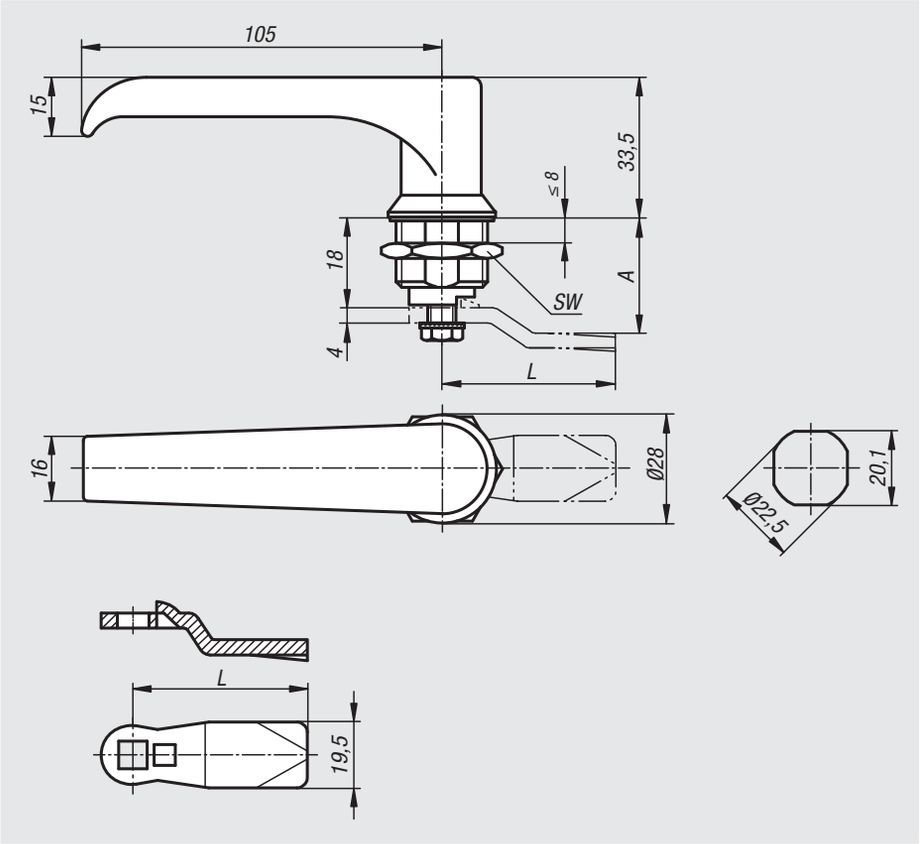

Material:
Grip 1.4301 stainless steel.
Housing and nut 1.4305 stainless steel.
Tongue 1.4301 stainless steel.

Version:
Bright.

Sample order:
nlm Quarter turn lock 05594-1186
nlm Tongue 05569-245X180

Note:
Quarter-turn lock with L-grip. For right or left mounting with 90° closing. The quarter-turn lock can be installed pre-assembled. Supplied with standard stainless-steel nut. Rating IP65. Please order required tongue version separately. Every tongue can be combined with this housing.

Quarter-turn lock, stainless steel with L-grip

Order No.	Actuation
05594-1186	L-grip

Tongue for quarter-turn lock

Order No.	A for housing length H=18	L
05569-245X180	18	45
05569-245X200	20	45
05569-245X240	24	45
05569-245X280	28	45
05569-245X320	32	45
05569-245X340	34	45
05569-245X360	36	45
05569-245X380	38	45
05569-245X400	40	45
05569-245X420	42	45

Quarter-turn locks

stainless steel with L-grip

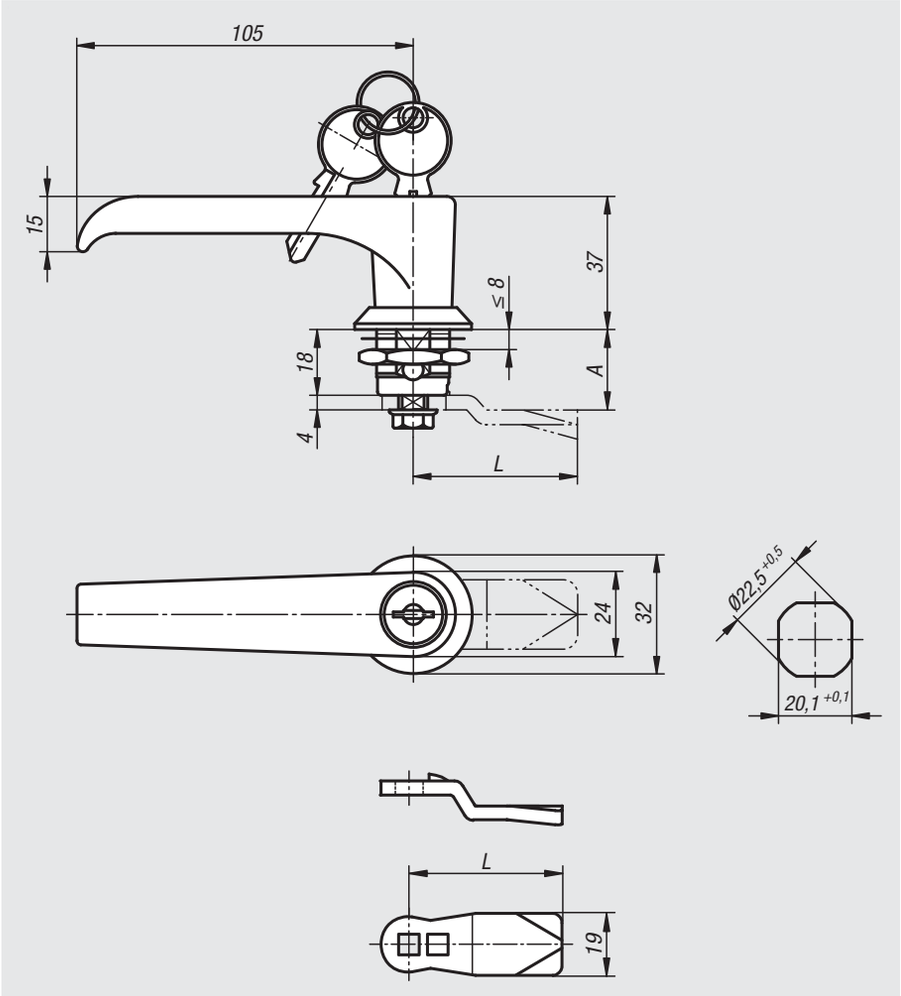

Material:
Quarter-turn lock 1.4401 stainless steel.
Tongue 1.4301 stainless steel.

Version:
Bright.
Grip polished.

Sample order:
nlm Quarter turn lock 05594-02-118
nlm Tongue 05566-07-450660

Note:
Quarter-turn lock with L-grip. For right or left mounting with 90° closing. The quarter-turn lock can be installed pre-assembled. Rating IP65. Please order required tongue version separately. Every tongue can be combined with this housing.

The lockable quarter-turn locks are each supplied with 2 keys. The cylinder locks have a single-key system i.e. the same key works in all locks.

On request:
Available for door thickness 20 and 40 mm.

Quarter-turn lock, stainless steel with L-grip

Order No.	Actuation	D
05594-02-218	lockable L-grip	32
05594-02-118	L-grip	32

Tongue for quarter-turn lock

Order No.	A	L
05566-07-45060	6	45
05566-07-45080	8	45
05566-07-45100	10	45
05566-07-45140	14	45
05566-07-45160	16	45
05566-07-45180	18	45
05566-07-45200	20	45
05566-07-45220	22	45
05566-07-45240	24	45
05566-07-45260	26	45
05566-07-45280	28	45
05566-07-45320	32	45
05566-07-45500	50	45

Quarter-turn locks

for sterile areas

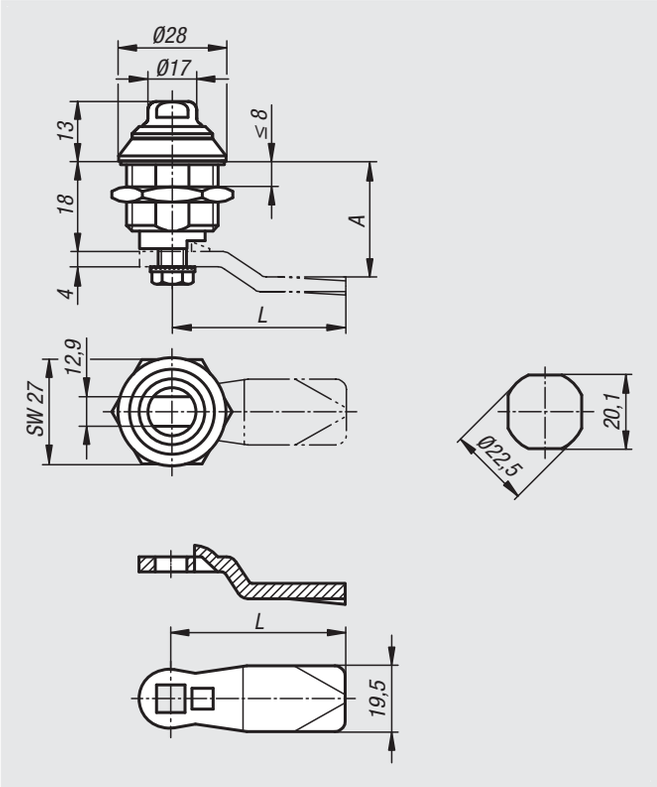

Material:
Quarter-turn lock 1.4305 stainless steel.
Tongue 1.4301 stainless steel.

Version:
Bright.

Sample order:
nlm Quarter turn lock 05595-60186
nlm Tongue 05569-245X180

Note:
Stainless steel quarter-turn lock with 13 mm AF actuator for applications with hygienic requirements as per EN ISO 14159, EN 1672-2:2009* and BG (test certificate on request). Dust and waterproof as per IP69K. The rounded form and polished surfaces together with the material used make these locks insensitive to cleaning materials and resistant to dirt. The seal between the quarter-turn lock and the door is made using the captive PUR foam seal on the underside of the quarter-turn lock housing.

Quarter-turn lock for sterile areas

Order No.	Actuation
05595-60186	double flat

Tongue for quarter-turn lock

Order No.	A for housing length H=18	L
05569-245X180	18	45
05569-245X200	20	45
05569-245X240	24	45
05569-245X280	28	45
05569-245X320	32	45
05569-245X340	34	45
05569-245X360	36	45
05569-245X380	38	45
05569-245X400	40	45
05569-245X420	42	45

Slam latches

Material:
Die cast aluminium.
End caps plastic.

Version:
Black powder-coated.
End caps black.

Sample order:
nlm 05598-100561

Note:
For the simple and safe locking of doors and hatches. Installed from the front without mechanical processing using M6 cylinder-head or cheese-head screws. Secured to prevent removal when locked.

The key-operated version is supplied with 2 keys. The key can be removed in both positions (open and closed). The locks are keyed alike, i.e. they can all be opened using the same key (euro key 5333).

The double-lug version is supplied with a double lug key.

Drawing reference:
Actuation:
a) single-key system
b) square 8 mm
c) double lug 5 mm

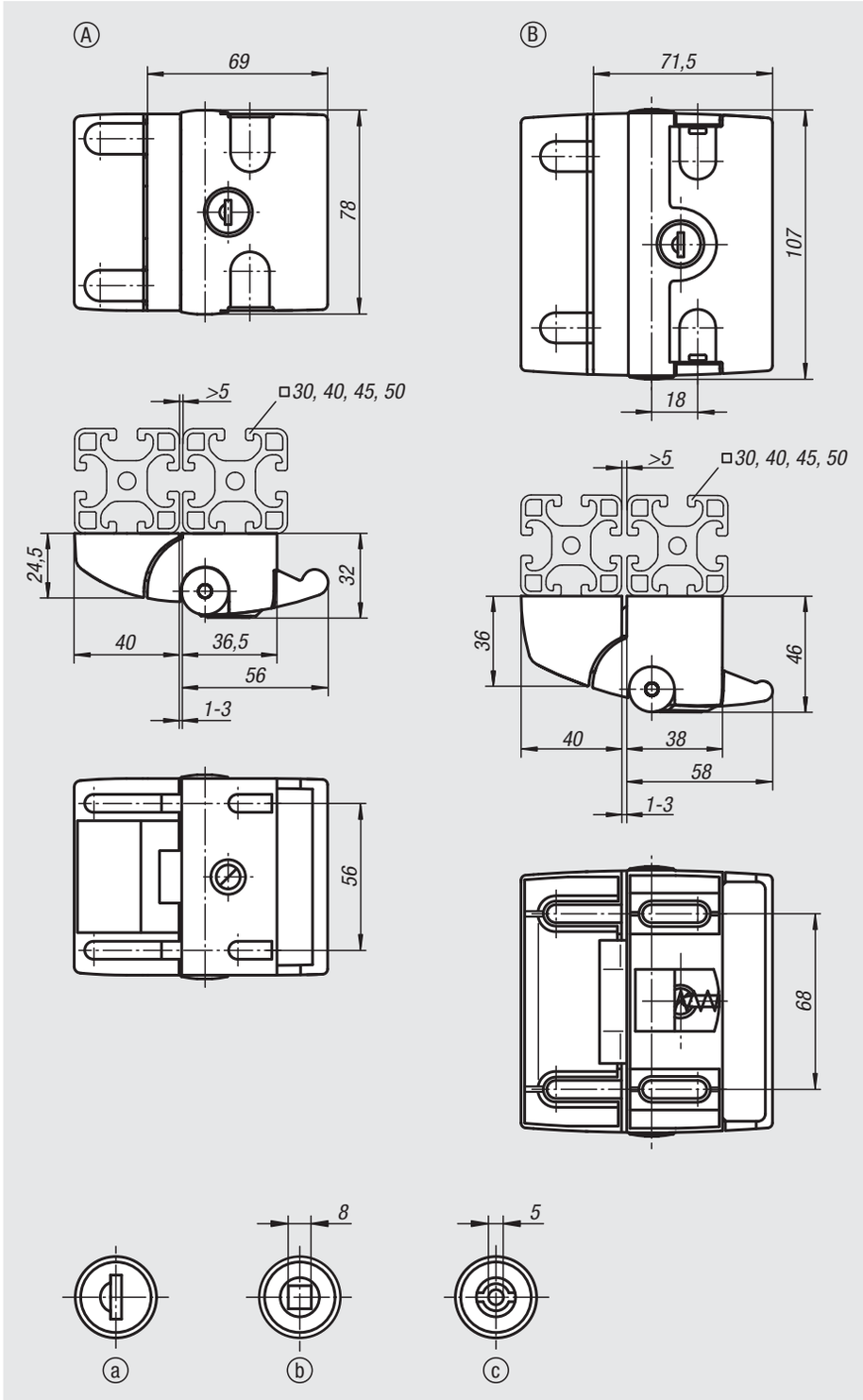

Order No.	Form	Slot width	Actuation
05598-100561	A	8/10	not lockable
05598-170561	A	8/10	key
05598-118561	A	8/10	square 8 mm
05598-145561	A	8/10	double lug 5 mm
05598-200681	B	8/10	not lockable
05598-270681	B	8/10	key

Slam latch

with integrated safety function

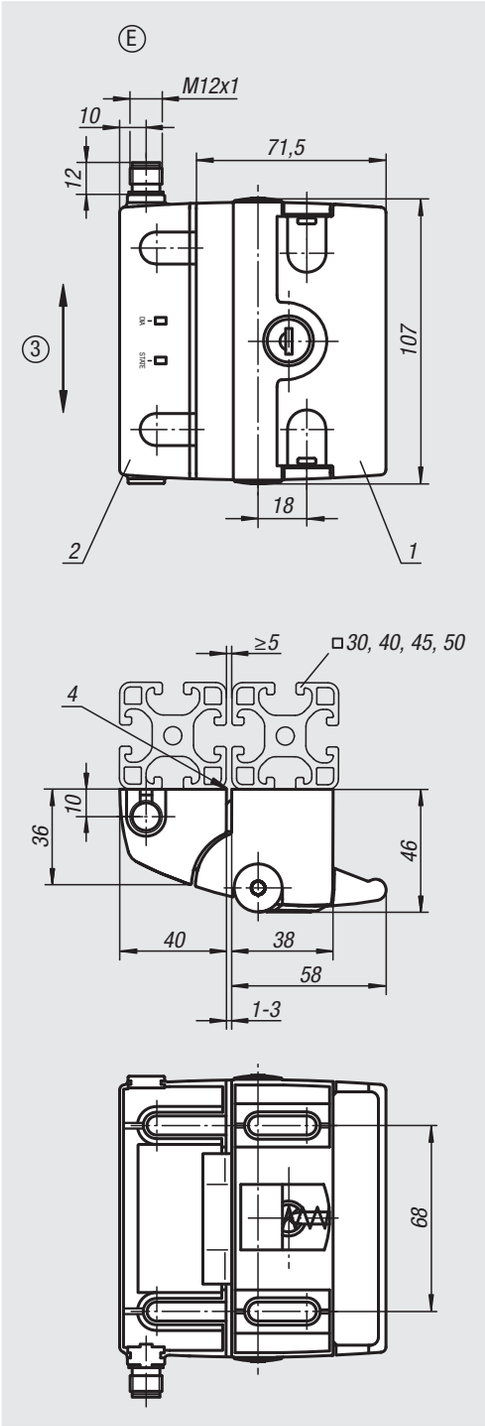

Material:
Die cast aluminium.
End caps plastic.

Version:
Black powder-coated.
End caps black.
M12 plug – eight-pin, plug outlet at top or bottom.
For left or right opening doors.
System voltage 24 V.
UL-certified.
Tested according to B6.
Safety class category 4, PLe (EN ISO 13849-1).

Sample order:
nlm 05598-370681

Note:
For the simple and safe locking of doors and hatches. Installed from the front without mechanical processing using M6 cylinder head or pan head screws. Secured to prevent removal when locked. With integrated safety function. Safety doors up to cat. 4/PLe secured thanks to integrated transponder-coded safety technology. Can also be locked to prevent inadvertent machine stoppage. To display the status, the slam latch has two highly visible LED‘s to ensure rapid diagnosis.

The lockable slam latches are both supplied with 2 keys. The key can be removed in both positions (open and closed). The locks are keyed alike, i.e. they can all be opened using the same key (euro key 5333).

Possible profile combinations:
- 30/40 30/45 30/50
- 40/30 40/40 40/45 40/50
- 45/30 45/40 45/45 45/50
- 50/30 50/40 50/45 50/50

Drawing reference:
1) Grip module
2) Lock module
3) Vertical offset between lock and grip module: ±1 mm max.
4) Mount lock module flush with profile

Order No.	Form	Slot width	Actuation
05598-370681	E	8/10	key

Emergency openers

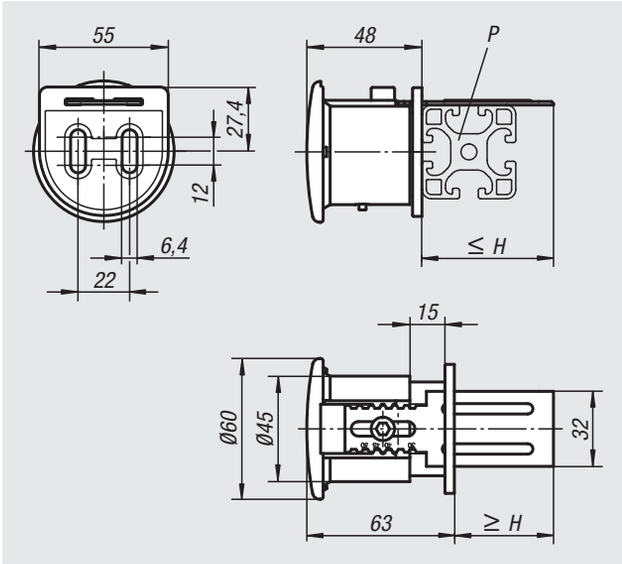

Material:
Body plastic PA 6, fibreglass reinforced.
Push button plastic PA 6, fibreglass reinforced.
Release catch steel.

Version:
Body black.
Push button red.
Release catch galvanized.

Sample order:
nlm 05599-93050

Note:
Rear-side emergency release for slam latches. Installation with two socket head screws (preferably DIN 912 M6x12), no machining required. Suitable for all slam latches.

Order No.	Slot width	H min.	H max.	P
05599-93050	8/10	30	50	30-50
05599-96080	8/10	60	80	60-80

Swing clamps

pneumatic

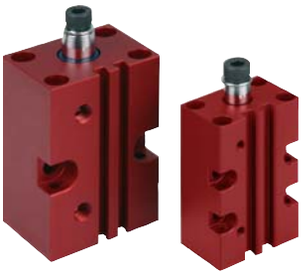

Material:
Body aluminium.
Double-acting piston rod stainless steel.

Version:
Body, red anodized.
Double acting piston rod, polished.

Sample order:
nlm 05610-112

Note:
Swing clamps are used where low clamping forces suffice or where the clamping point must be free when mounting and removing the workpiece. The block form of the housing offers universal fastening possibilities. The magnetic piston is primed for electrical end position feedback. Including screw and lock washer for fastening the clamping arms (accessories). The swing action of the clamp should not be blocked.
F1 = at 6 bar (max. operating pressure).

On request:
Proximitiy switch.

Accessories:
- Clamping arm 05620
- Adapter 05625

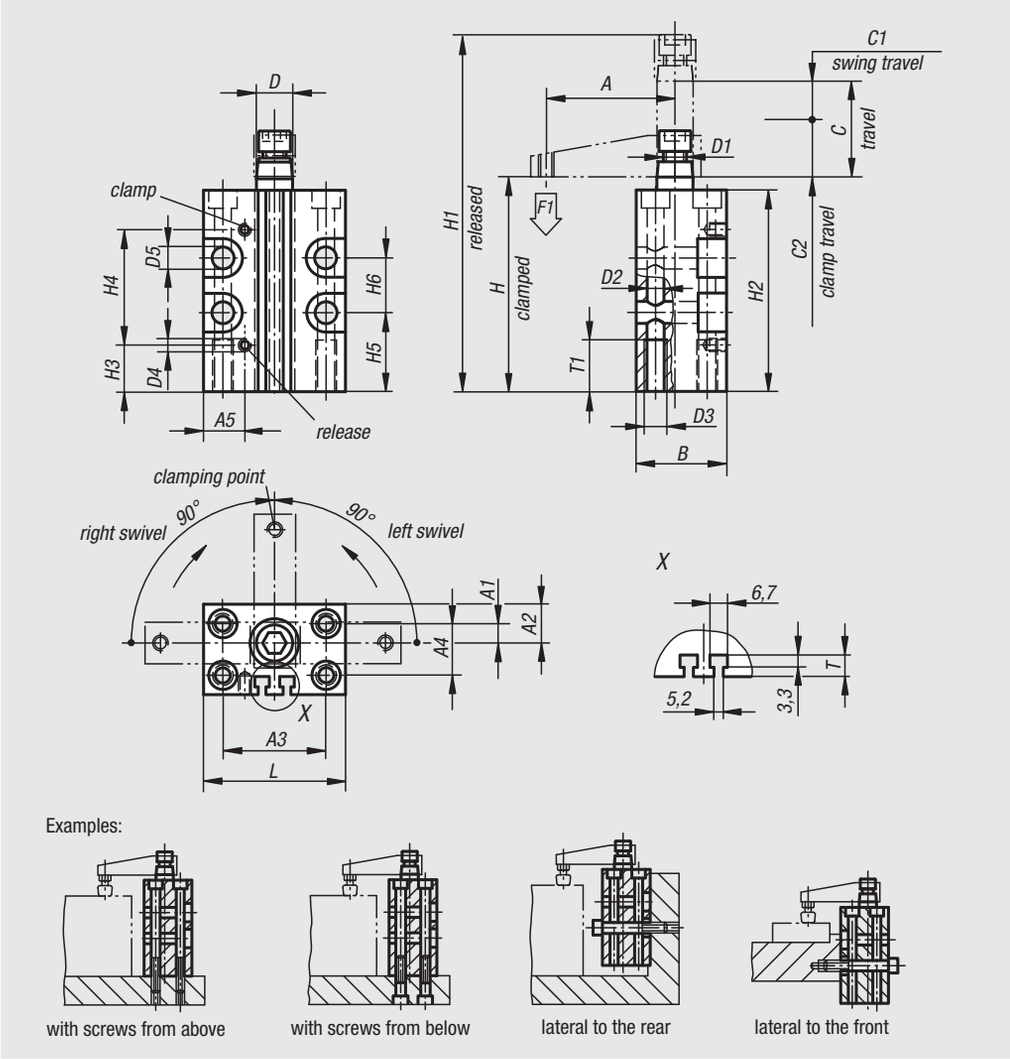

Order No. swivel to the right	Order No. swivel to the left	Size	A	A1	A2	A3	A4	A5	B	C (travel)	C1	C2	D	D1	D2	D3
05610-112	**05610-212**	12	35	0	10	31	-	20	24	16	7	9	8	M5	4,3	M5
05610-116	**05610-216**	16	41	-2	11	31	-	21	28	16	7	9	8	M5	4,3	M5
05610-120	**05610-220**	20	48	8	13	36	20	11,5	30	27	12	15	12	M8	5,5	M6
05610-125	**05610-225**	25	50	7,5	15	40	20	17	35	27	15	12	14	M8	6,5	M8
05610-132	**05610-232**	32	60	12,5	20	45	30	18	45	30	16	14	16	M8	6,5	M8
05610-140	**05610-240**	40	70	15,5	24,5	52	37	22	55	31	16	15	16	M8	8,5	M10
05610-150	**05610-250**	50	80	21,5	31	66	46	25	65	30	15	15	20	M10	8,5	M10
05610-163	**05610-263**	63	90	27,5	37,5	80	60	30	80	30	15	15	20	M10	10,5	M12

Order No. swivel to the right	Order No. swivel to the left	Size	D4	D5	H	H1	H2	H3	H4	H5	H6	L	T	T1	F1 kN
05610-112	**05610-212**	12	M5	4,3	75	104	70	11	51	26	21	40	5	15	0,03
05610-116	**05610-216**	16	M5	4,3	75	104	70	11	51	26	21	42	4,5	15	0,06
05610-120	**05610-220**	20	M5	5,5	79	124	74	17	44,5	24	22	46	4,5	20	0,08
05610-125	**05610-225**	25	M5	8,5	82	125	78	17	44,5	32	-	55	5	20	0,17
05610-132	**05610-232**	32	G1/8	8,5	96	145	90	22	50	43	-	60	6,5	20	0,27
05610-140	**05610-240**	40	G1/8	8,5	95	145	90	20	52	40	-	70	8	25	0,45
05610-150	**05610-250**	50	G1/8	10,5	106	162	100	25	53,5	45	-	85	6,5	30	0,7
05610-163	**05610-263**	63	G1/8	10,5	106	162	100	28	53,5	36	-	100	8,5	30	1,1

Clamping arm

for swing clamp

Material:
High-strength aluminium alloy

Version:
Coated with hart-coat®

Sample order:
nlm 05620-12

Note:
Hard wearing surface, repels welding particles. Suitable for pneumatic swing clamp 05610, in respective sizes.

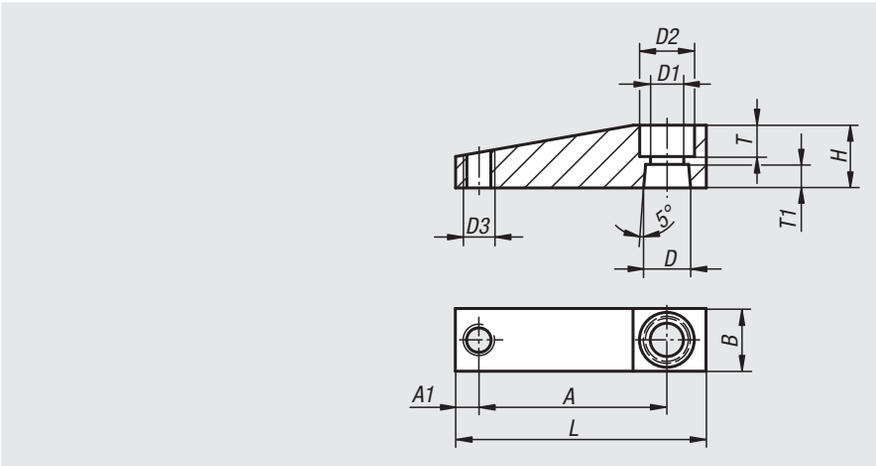

Order No.	Size	A	A1	B	D	D1	D2	D3	H	L	T	T1
05620-12	12	35	4	12	8	5,5	9	M4	12	45	5	5
05620-16	16	41	4	12	8	5,5	9	M4	12	51	4	5
05620-20	20	48	6	16	12	8,5	14	M6	16	64	8	6
05620-25	25	50	6	16	14	9	14	M6	16	66	6	6
05620-32	32	60	9	20	16	9	14	M8	20	80	7	9
05620-40	40	70	9	20	16	9	14	M8	20	90	7	9
05620-50	50	80	10	25	20	11	17	M12	25	105	9	10
05620-63	63	90	10	25	20	11	17	M12	25	115	9	10

Adapters

for swing clamp

Material:
High-strength aluminium alloy

Version:
Coated with hart-coat®

Sample order:
nlm 05625-1216

Note:
Hard wearing surface, repels welding particles. Holds matching clamping arms. Suitable for pneumatic swing clamp 05610 in respective sizes.

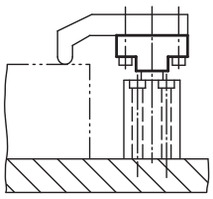

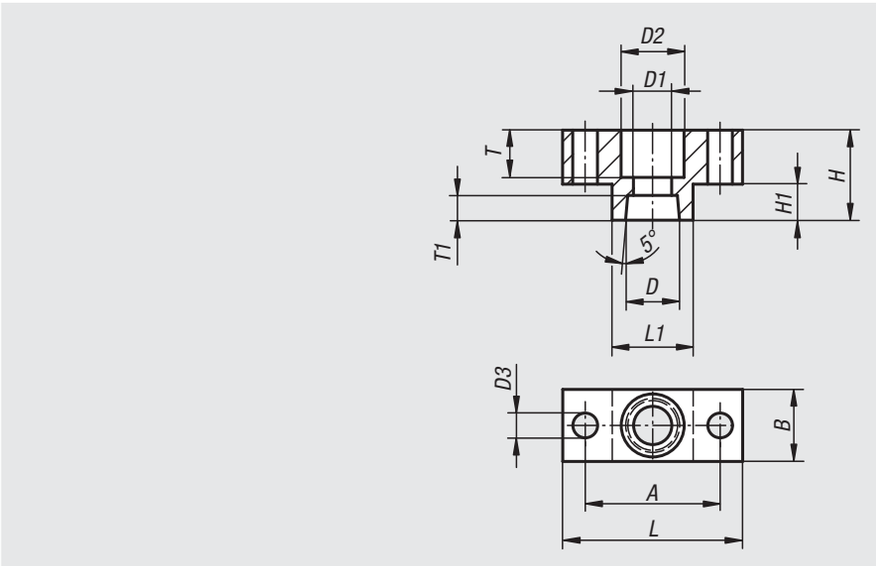

Order No.	Size	A	B	D	D1	D2	D3	H	H1	L	L1	T	T1
05625-1216	12/16	22	12	8	5,5	10	4,5	14	6	30	13	7	5
05625-2000	20	30	16	12	8,5	14	5,5	20	8	40	18	10,5	5,5
05625-2500	25	38	16	14	8,5	14	5,5	20	8	50	25	8	6,5
05625-3240	32/40	45	19	16	8,5	14	7	25	10	60	30	11	9
05625-5063	50/63	48	25	20	10,5	17	9	30	12	65	30	14	10

Notes

Pneumatic toggle lever clamps

Tünkers system

Pneumatic toggle lever clamps are used for economic manufacturing in transfer lines, machine tools, fixtures and specialist machines.

Functional principle:
High clamping forces are achieved at low air pressure and air consumption because of the knee-operated lever clamp. The clamping arm is laterally stable and solidly bearing-mounted against rotation, torsion and angular shift. The clamping forces engendered by the knee-operated lever are taken up by thrust bearings.

Particular design features:

Clamp design:
Hardened bushes and guide rails, roller-mounted thrust bearings. Maintenance-free due to permanent lubrication and specialist bearing bushes.

Retaining clamps:
Are completely self-inhibiting. The clamping force is safely guaranteed, even if the pressure is removed. Clip position in the top dead centre position:

Note:
The clamping arm can always be moved from the top dead centre position if the acting retention force does not exceed the clamping force created (e.g. by slippage of the clamped machined part).

Determining the end position:

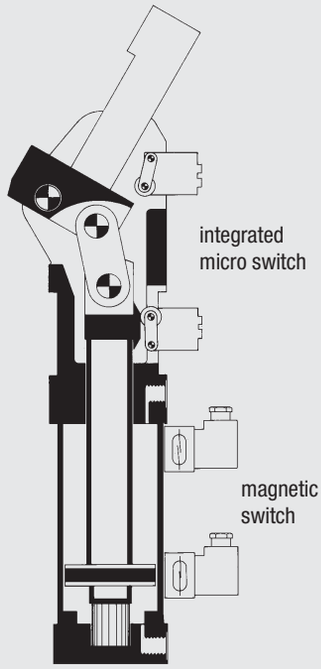

Control:
When constructing complete switches consult the known manufacturers of pneumatic valves, who also supply all the connecting components and fittings.

Selection criteria:
With pneumatic clamps, in order to be able to select the correct clamp size, in addition to the retention force, the possible clamping force at 5 bar air pressure
(max. possible air pressure 8 bar)
is also specified.

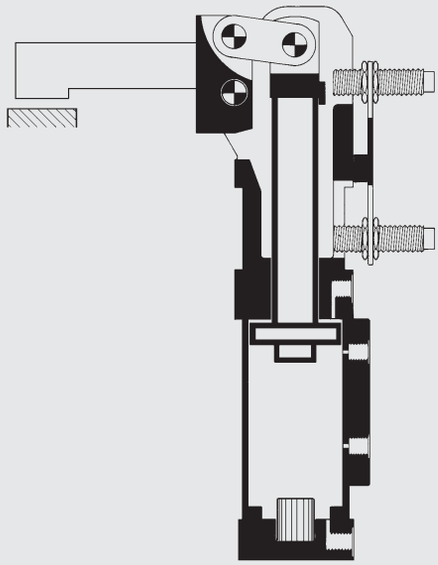

mounting example

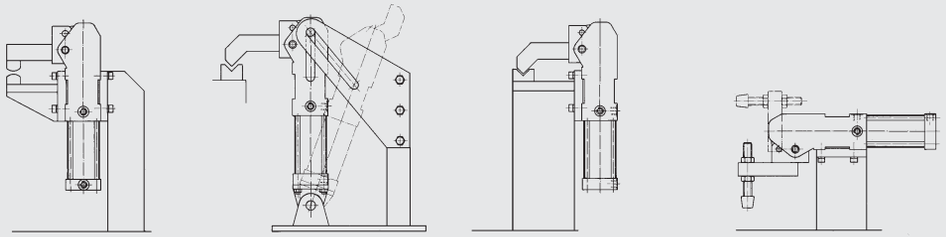

Mini clamps

Material:
Casing high-tensile aluminium.
Clamping arm steel.

Version:
Housing anodized.
Clamping arm black oxidised.

Sample order:
nlm 05650-0500111

Note:
The mini clamp is characterised by its small dimensions, positioning accuracy of the clamping arm and light construction. Mini clamps are fully self-limiting. The clamping force is guaranteed even when the pressure is removed through the over dead-centre position of the toggle lever on the clamping arm. The permanent lubrication and special bearing bushings make the mini clamps maintenance-free. They can be operated using dry, oil-free air.

On request:
Clamping arm without holes.

electronic end position feedback

no end position feedback

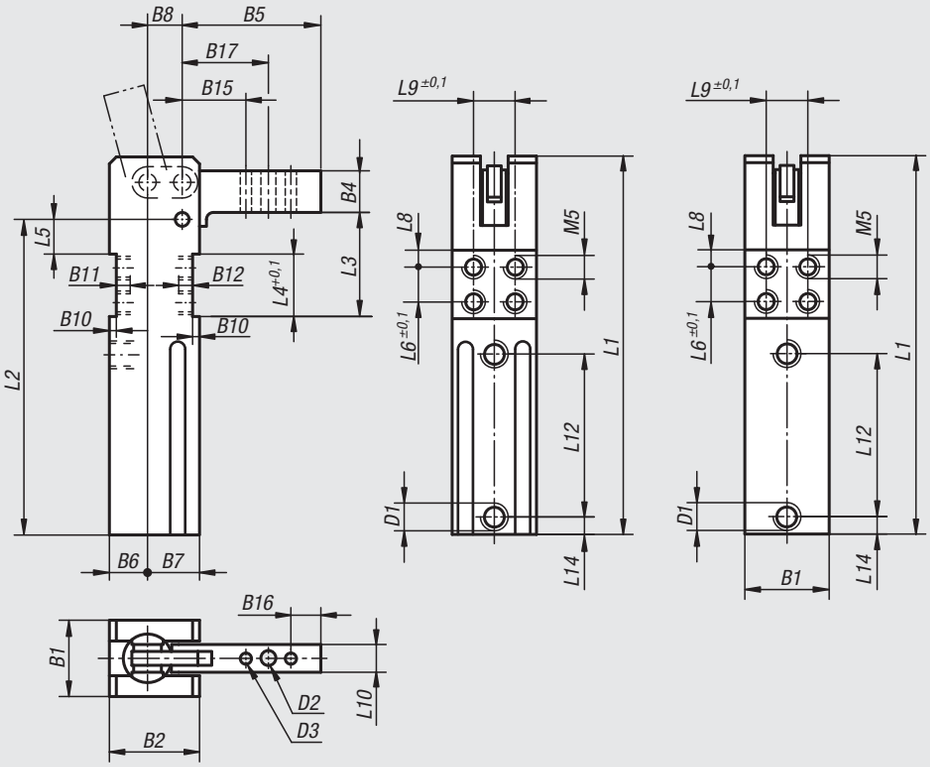

Form A
vertical clamping force
max. opening angle 105°

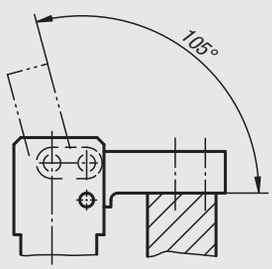

Form B
horizontal clamping force
max. opening angle 96°

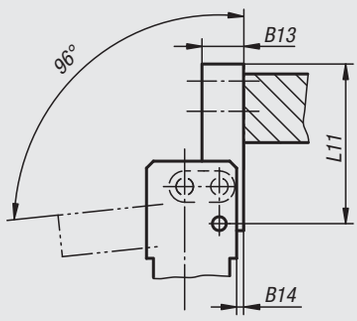

Electrical
connection diagram

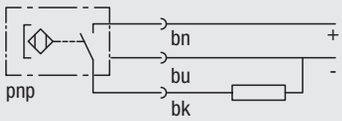

Connection type	PICO
Operating voltage (V)	10...30 VDC
Residual ripple (%)	≤ 10
Intrinsic current consumption (mA)	≤ 2,0
Constant current (mA)	≤ 120
Switching hysteresis (mm)	≤ 1
Condition display	LED
Permissible environmental temperature (°C)	-25...+70
Protection class (DIN 40 050)	IP 67

Mini clamps

Mini clamp with electronic end position feedback

Order No. Form A	Order No. Form B	Size	Tightening torque Nm at 5 bar	Retaining torque Nm	Operating pressure bar with oil-free air	Max pressure bar with oil-free air	B1	B2	B4	B5	B6	B7	B8	B10	B11	B12	B13	B14
05650-0500111	**05650-0500121**	2	8	25	5	6	26	32	15	50	14	18	12	2,5	5	7	12	2
05650-0900111	**05650-0900121**	3	15	54	5	6	30	39	18	60	17	22	15	3	6	8	16	3
05650-1000111	**05650-1000121**	4	25	75	5	6	35	45	22	75	20	25	18	4	6	8	18	4

Order No. Form A	Order No. Form B	Size	B15	B16	B17	D1	D2	D3	L1	L2	L3	L4	L5	L6	L8	L9	L10	L11	L12	L14
05650-0500111	**05650-0500121**	2	28	6	36	M5	5,5	4	123	96	27,5	20	7,5	10	5	16	10	50	57	12
05650-0900111	**05650-0900121**	3	32	8	42	G 1/8	6,5	5	158	120	40	25	14	15	5	20	12	60	69	15
05650-1000111	**05650-1000121**	4	40	10	52,5	G 1/8	8,5	6	182	136	47	28	17	18	5	25	16	75	80	17,5

Mini clamp without end position feedback

Order No. Form A	Order No. Form B	Size	Tightening torque Nm at 5 bar	Retaining torque Nm	Operating pressure bar with oil-free air	Max pressure bar with oil-free air	B1	B2	B4	B5	B6	B7	B8	B10	B11	B12	B13	B14
05650-0500411	**05650-0500421**	2	8	25	5	6	26	32	15	50	14	18	12	2,5	5	7	12	2
05650-0900411	**05650-0900421**	3	15	54	5	6	30	39	18	60	17	22	15	3	6	8	16	3
05650-1000411	**05650-1000421**	4	25	75	5	6	35	45	22	75	20	25	18	4	6	8	18	4

Order No. Form A	Order No. Form B	Size	B15	B16	B17	D1	D2	D3	L1	L2	L3	L4	L5	L6	L8	L9	L10	L11	L12	L14
05650-0500411	**05650-0500421**	2	28	6	36	M5	5,5	4	123	96	27,5	20	7,5	10	5	16	10	50	57	12
05650-0900411	**05650-0900421**	3	32	8	42	G 1/8	6,5	5	158	120	40	25	14	15	5	20	12	60	69	15
05650-1000411	**05650-1000421**	4	40	10	52,5	G 1/8	8,5	6	182	136	47	28	17	18	5	25	16	75	80	17,5

Mini clamp

manual operated

Material:
Casing high-tensile aluminium.
Clamping arm steel.

Version:
Housing anodized.
Clamping arm black oxidised.

Sample order:
nlm 05652-081111

Note:
The mini clamp is characterised by its small size, positioning accuracy of the clamping arm, and lightweight construction. Mini clamps are fully self-locking. The clamping force is guaranteed even when the pressure is removed through the over dead-centre position of the toggle lever on the clamping arm. The permanent lubrication and special bearing bushings make the mini clamps maintenance-free. They can be operated using dry, oil-free air.
The manual closing and locking using the hand lever.
Pneumatic opening and closing.

Attention: A 5/3-way valve is required, middle position vented.

On request:
Clamping arm without holes.

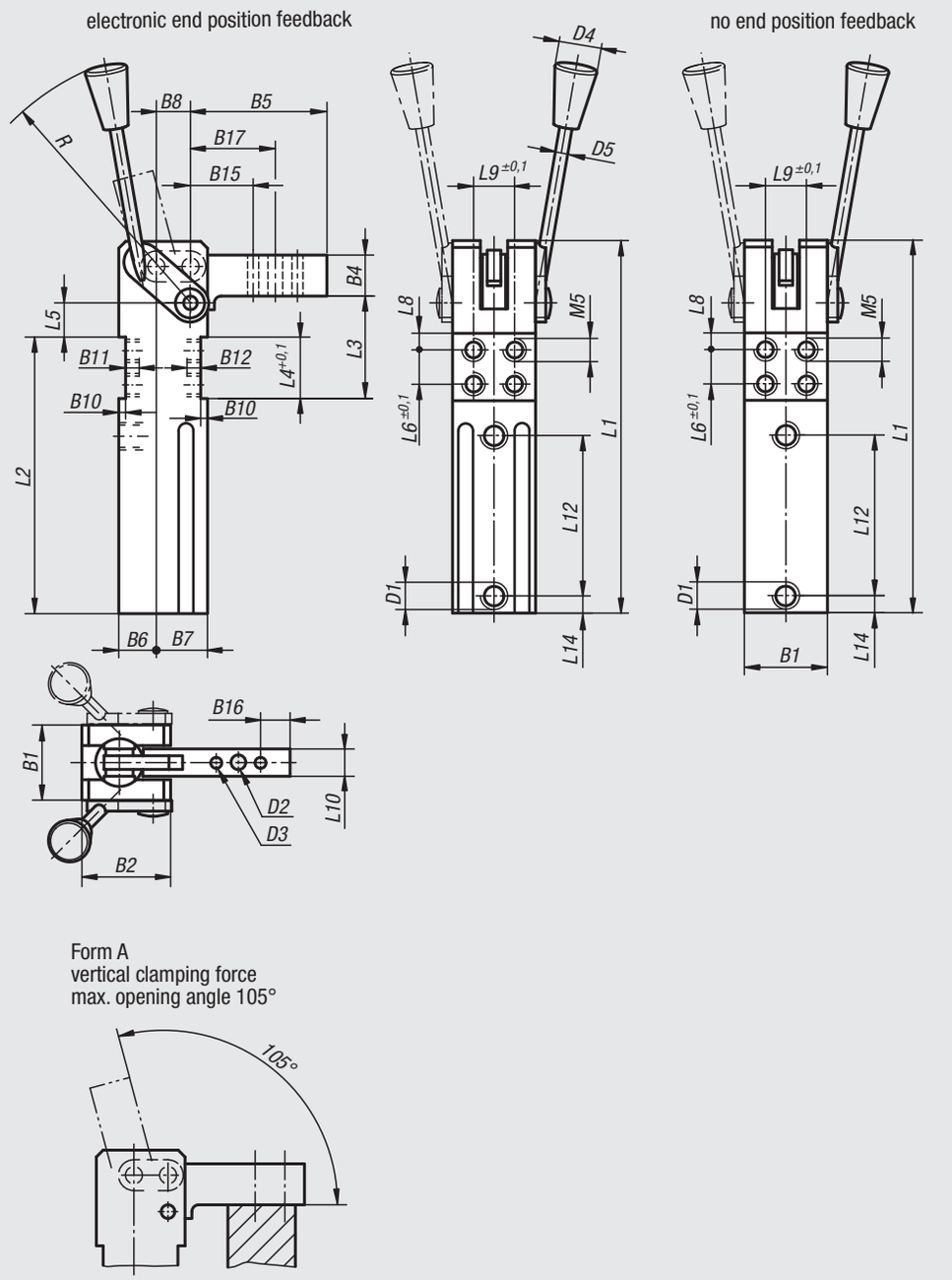

Electrical
connection diagram

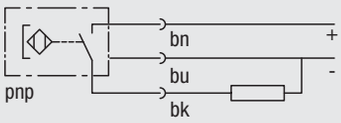

Connection type	PICO
Operating voltage (V)	10...30 VDC
Residual ripple (%)	≤ 10
Intrinsic current consumption (mA)	≤ 2,0
Constant current (mA)	≤ 120
Switching hysteresis (mm)	≤ 1
Condition display	LED
Permissible environmental temperature (°C)	-25...+70
Protection class (DIN 40 050)	IP 67

Mini clamp

manual operated

Mini clamp with electronic end position feedback

Order No.	Size	Tightening torque Nm at 5 bar	Retaining torque Nm	Operating pressure bar with oil-free air	Max pressure bar with oil-free air	B1	B2	B4	B5	B6	B7	B8	B10	B11	B12	B15	B16	B17
05652-081111	2	8	25	5	6	26	32	15	50	14	18	12	2,5	5	7	28	6	36
05652-081112	2	8	25	5	6	26	32	15	50	14	18	12	2,5	5	7	28	6	36
05652-151111	3	15	54	5	6	30	39	18	60	17	22	15	3	6	8	32	8	42
05652-151112	3	15	54	5	6	30	39	18	60	17	22	15	3	6	8	32	8	42
05652-251111	4	25	75	5	6	35	45	22	75	20	25	18	4	6	8	40	10	52,5
05652-251112	4	25	75	5	6	35	45	22	75	20	25	18	4	6	8	40	10	52,5

Order No.	Size	D1	D2	D3	D4	D5	L1	L2	L3	L4	L5	L6	L8	L9	L10	L12	L14	R	manual operated
05652-081111	2	M5	5,5	4	20	9	123	96	27,5	20	7,5	10	5	16	10	57	12	135	left
05652-081112	2	M5	5,5	4	20	9	123	96	27,5	20	7,5	10	5	16	10	57	12	135	right
05652-151111	3	G 1/8	6,5	5	20	9	158	120	40	25	14	15	5	20	12	69	15	135	left
05652-151112	3	G 1/8	6,5	5	20	9	158	120	40	25	14	15	5	20	12	69	15	135	right
05652-251111	4	G 1/8	8,5	6	20	9	182	136	47	28	17	18	5	25	16	80	17,5	135	left
05652-251112	4	G 1/8	8,5	6	20	9	182	136	47	28	17	18	5	25	16	80	17,5	135	right

Mini clamp without end position feedback

Order No.	Size	Tightening torque Nm at 5 bar	Retaining torque Nm	Operating pressure bar with oil-free air	Max pressure bar with oil-free air	B1	B2	B4	B5	B6	B7	B8	B10	B11	B12	B15	B16	B17
05652-084111	2	8	25	5	6	26	32	15	50	14	18	12	2,5	5	7	28	6	36
05652-084112	2	8	25	5	6	26	32	15	50	14	18	12	2,5	5	7	28	6	36
05652-154111	3	15	54	5	6	30	39	18	60	17	22	15	3	6	8	32	8	42
05652-154112	3	15	54	5	6	30	39	18	60	17	22	15	3	6	8	32	8	42
05652-254111	4	25	75	5	6	35	45	22	75	20	25	18	4	6	8	40	10	52,5
05652-254112	4	25	75	5	6	35	45	22	75	20	25	18	4	6	8	40	10	52,5

Order No.	Size	D1	D2	D3	D4	D5	L1	L2	L3	L4	L5	L6	L8	L9	L10	L12	L14	R	manual operated
05652-084111	2	M5	5,5	4	20	9	123	96	27,5	20	7,5	10	5	16	10	57	12	135	left
05652-084112	2	M5	5,5	4	20	9	123	96	27,5	20	7,5	10	5	16	10	57	12	135	right
05652-154111	3	G 1/8	6,5	5	20	9	158	120	40	25	14	15	5	20	12	69	15	135	left
05652-154112	3	G 1/8	6,5	5	20	9	158	120	40	25	14	15	5	20	12	69	15	135	right
05652-254111	4	G 1/8	8,5	6	20	9	182	136	47	28	17	18	5	25	16	80	17,5	135	left
05652-254112	4	G 1/8	8,5	6	20	9	182	136	47	28	17	18	5	25	16	80	17,5	135	right

Mini clamp

for horizontal installation

Material:
Casing high-tensile aluminium.
Clamping arm steel.

Version:
Housing anodized.
Clamping arm black oxidised.

Sample order:
nlm 05665-081

Note:
The mini clamp is characterised by its small dimensions, positioning accuracy of the clamping arm and light construction. Mini clamps are fully self-limiting. The clamping force is guaranteed even when the pressure is removed through the over dead-centre position of the toggle lever on the clamping arm. The permanent lubrication and special bearing bushings make the mini clamps maintenance-free. They can be operated using dry, oil-free air.

electronic end position feedback

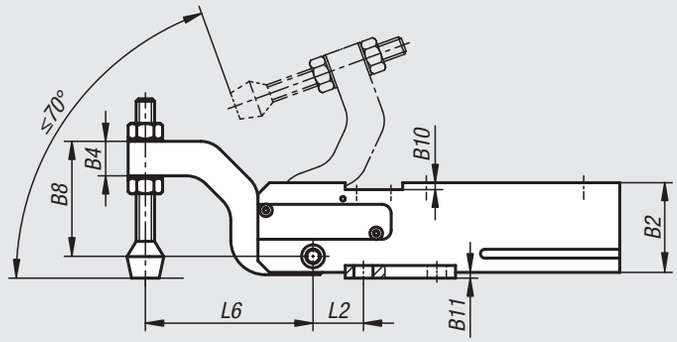

no end position feedback

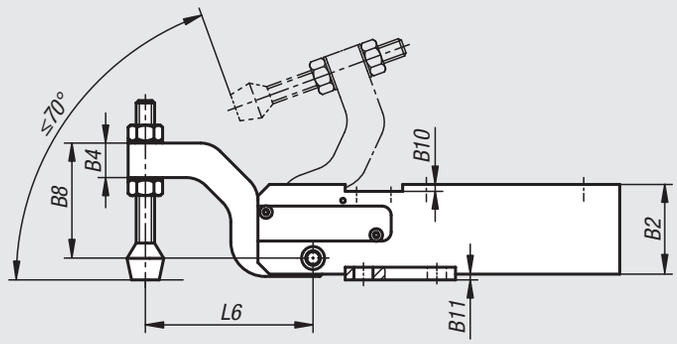

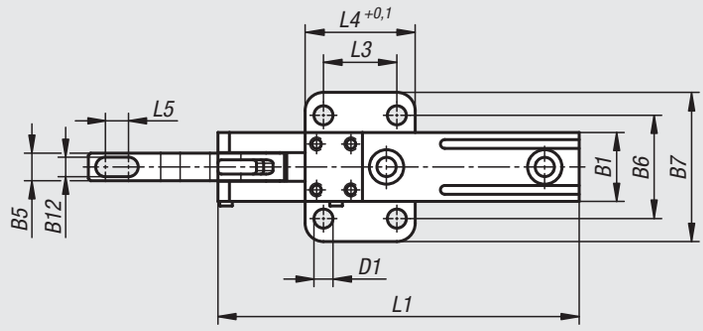

Electrical
connection diagram

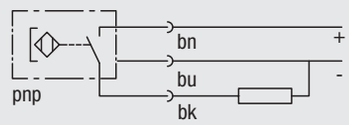

Connection type	PICO
Operating voltage (V)	10...30 VDC
Residual ripple (%)	≤ 10
Intrinsic current consumption (mA)	≤ 2,0
Constant current (mA)	≤ 120
Switching hysteresis (mm)	≤ 1
Condition display	LED
Permissible environmental temperature (°C)	-25...+70
Protection class (DIN 40 050)	IP 67

Mini clamp

for horizontal installation

Mini clamp with electronic end position feedback

Order No.	Size	Tightening torque Nm at 5 bar	Retaining torque Nm	Operating pressure bar with oil-free air	Max pressure bar with oil-free air	B1	B2	B4	B5	B6	B7	B8
05665-081	2	8	25	5	6	26	32	12	10	45	65	33
05665-151	3	15	54	5	6	30	39	15	12	45	65	50
05665-251	4	25	75	5	6	35	45	12	16	50	70	52

Order No.	Size	B10	B11	B12	D1	L1	L3	L4	L5	L6	Connecting thread
05665-081	2	2,5	3	6,5	5	123	32	48	4	50	M05
05665-151	3	3	3	8,5	8,3	158	32	48	10,5	73	G1/8
05665-251	4	4	4	8,5	8,3	182	45	64	19,5	80	G1/8

Mini clamp without end position feedback

Order No.	Size	Tightening torque Nm at 5 bar	Retaining torque Nm	Operating pressure bar with oil-free air	Max pressure bar with oil-free air	B1	B2	B4	B5	B6	B7	B8
05665-084	2	8	25	5	6	26	32	12	10	45	65	33
05665-154	3	15	54	5	6	30	39	15	12	45	65	50
05665-254	4	25	75	5	6	35	45	12	16	50	70	52

Order No.	Size	B10	B11	B12	D1	L1	L3	L4	L5	L6	Connecting thread
05665-084	2	2,5	3	6,5	5	123	32	48	4	50	M05
05665-154	3	3	3	8,5	8,3	158	32	48	10,5	73	G1/8
05665-254	4	4	4	8,5	8,3	182	45	64	19,5	80	G1/8

Manual clamp

vertical with hole pattern on the front

Material:
Housing and clamping arm steel.

Sample order:
nlm 05666-55

Note:
Manual clamp with integrated toggle lever mechanism for over dead centre locking.
The clamping arm is has a fixed stop for reproducible end positions.
The housing features a hole pattern at the front.
All hinge pins for the mechanics are in bushes.
The hand lever has an ergonomic ball grip.
The clamping arm has a hole pattern for mounting thrust pads.

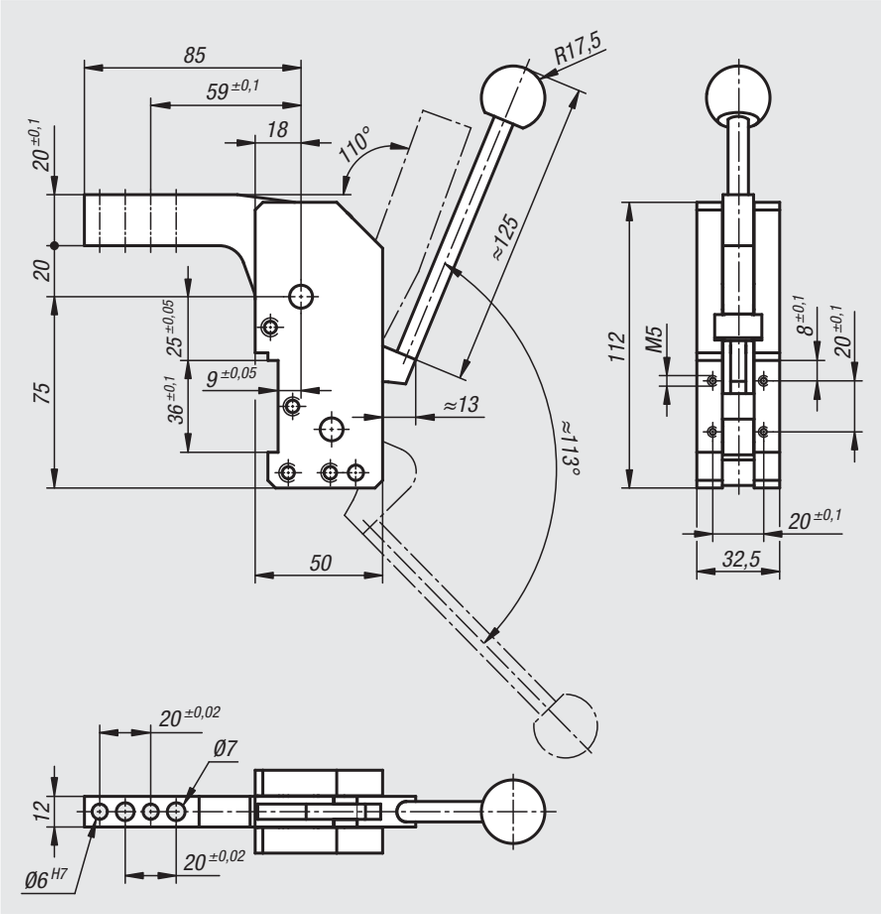

Order No.	Tightening torque Nm	Retaining torque Nm
05666-55	55	110

Manual clamp

vertical with hole pattern on the front

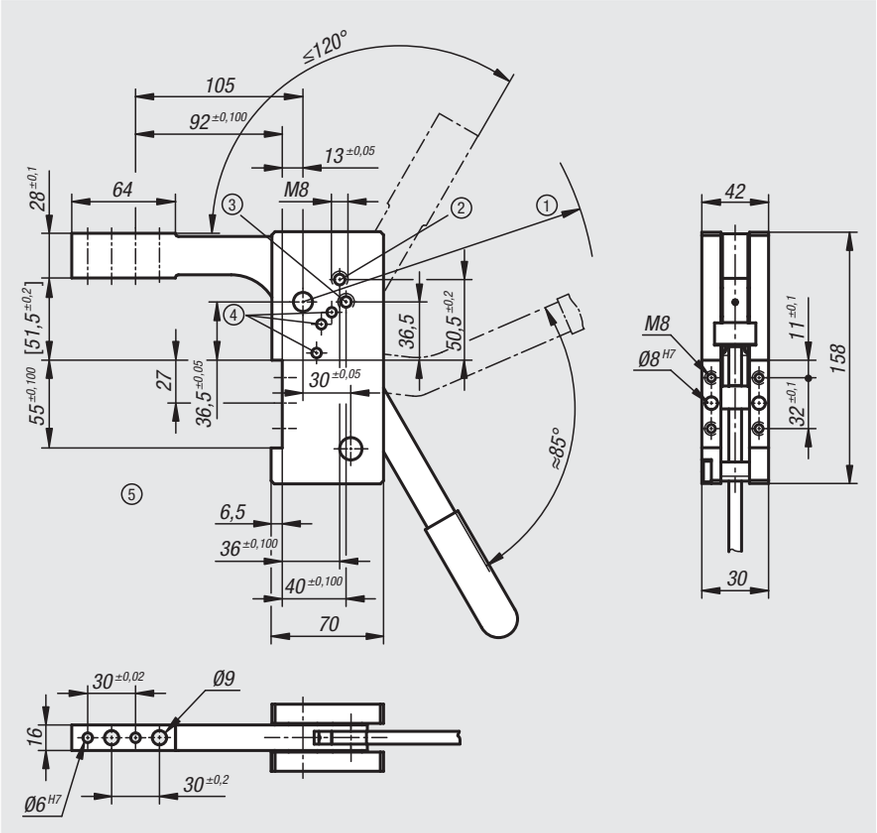

Material:
Housing and clamping arm steel.

Sample order:
nlm 05667-160

Note:
Manual clamp with integrated toggle lever for over dead centre locking.
The clamping arm is has a fixed stop for reproducible end positions.
The housing features a hole pattern at the front.
All hinge pins for the mechanics are in bushes.
The hand lever has an ergonomic grip.
The clamping arm has a hole pattern for mounting thrust pads.

1) Cantilever: max. R 300 mm
2) Ratchet stops for opening angles 45°–65°
3) Ratchet stops for opening angles 90°–120°
4) End stop for opening angle
5) For values [...] tolerances spaced at 80 mm from the fulcrum apply

Order No.	Tightening torque Nm	Retaining torque Nm
05667-160	160	320

Swing screws

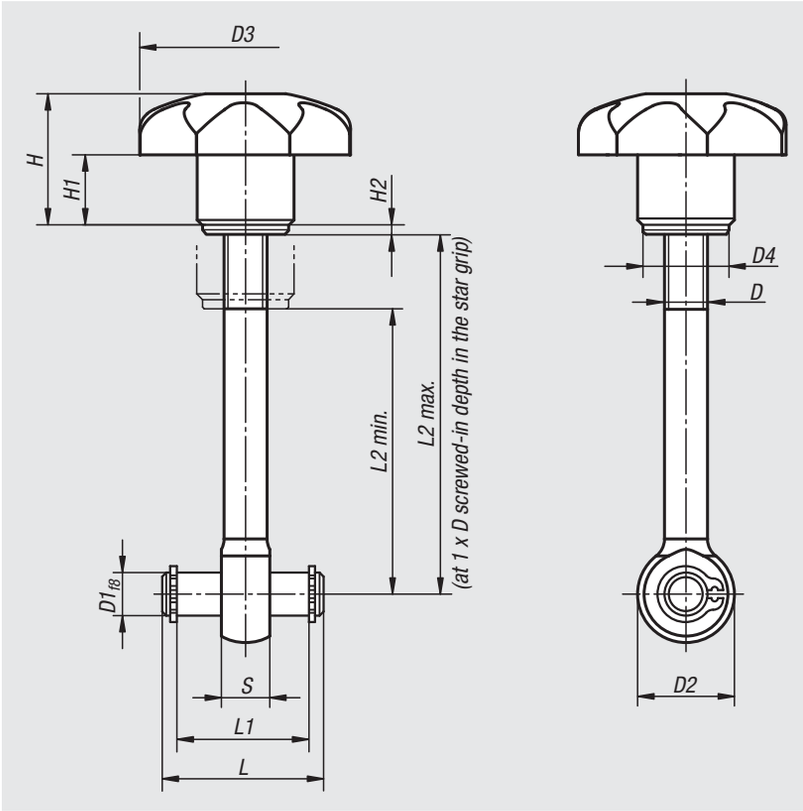

Material:
Star grip thermoplastic.
Bush steel.
Washer steel 140 HV.
Eye bolt steel grade 8.8.
Hinge pin steel 1.1181.

Version:
Star grip black.
Bush galvanised and blue passivated
Washer bright.
Eye bolt black oxidised.
Hinge pins tempered, ground and bright.

Sample order:
nlm 05660-06050

Note:
The swing screws are supplied unassembled.
Suitable circlips are enclosed.

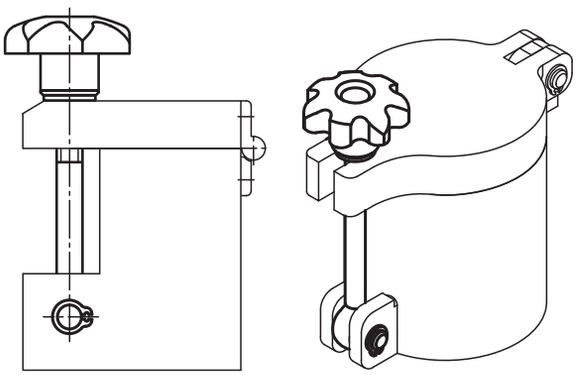

Order No.	D	D1	D2	D3	D4	H	H1	H2	L	L1	L2 min.	L2 max.	S
05660-06050	M6	6	14	32	12	20	10	1,6	22	17	32	44	7
05660-06075	M6	6	14	32	12	20	10	1,6	22	17	57	69	7
05660-08050	M8	8	18	40	16	24	13	1,6	30	25	28	42	9
05660-08075	M8	8	18	40	16	24	13	1,6	30	25	53	67	9
05660-10075	M10	10	20	50	20	31	17	2	37	32	49	65	12
05660-10100	M10	10	20	50	20	31	17	2	37	32	74	90	12

Push-pull clamps

heavy-duty version with handle

Material:
Steel.
Body and handle ductile iron (SG iron)

Version:
Phosphated, plastic handle oil-resistant

Sample order:
nlm 05840-25001

Note:
The clamps lock in the open and closed handle positions. They can be used for thrust or tension clamping.
The clamps have a stroke limitation for advance and retraction.

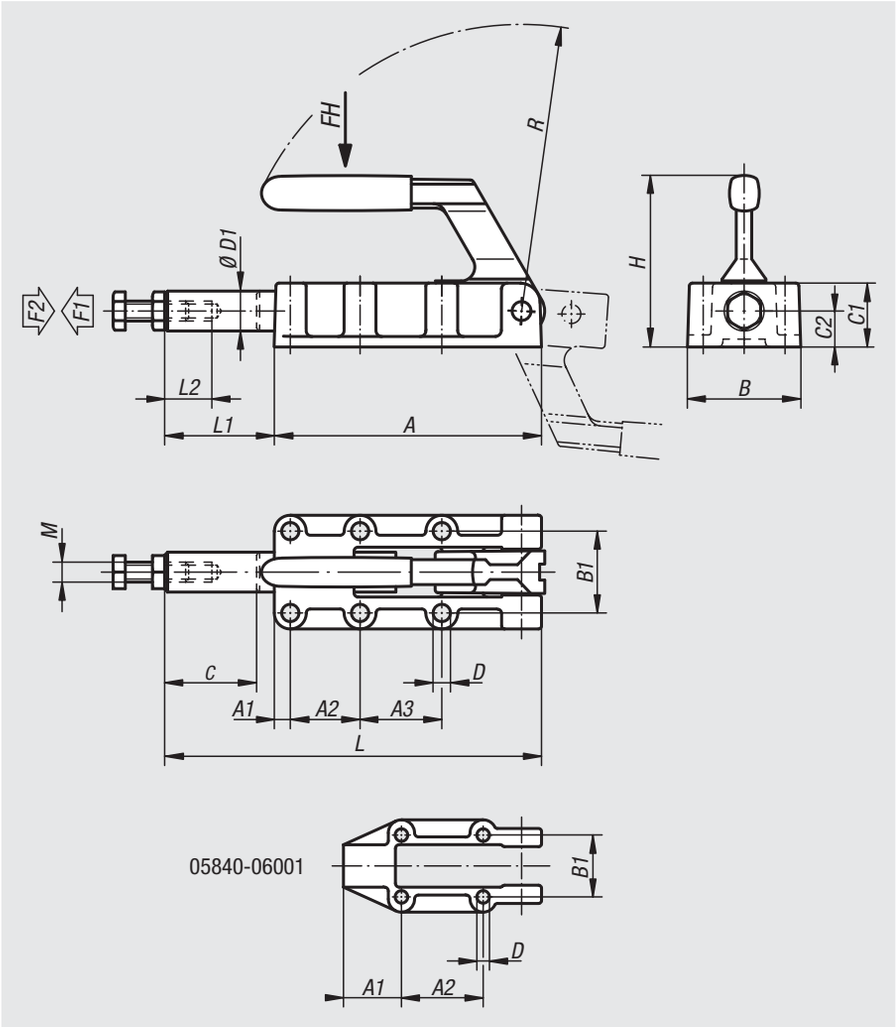

Order No.	Opening angle of handle	Hand force FH N	Retaining force F2 N	Clamping force F1 N
05840-06001	185°	140	6000	3000
05840-12001	185°	150	12000	5000
05840-25001	185°	170	25000	5000
05840-50001	185°	200	50000	7000

Order No.	A	A1	A2	A3	B	B1	C1	C2	D	D1	H	L	L1	L2	M	R	C (travel)
05840-06001	89	25	36,5	-	46	33,4	23	12	5,5	14	63	127	38	30	M8	95	32
05840-12001	133	8	35	41	61	41	32	18	8,5	20	88	188	55	40	M10	143	50
05840-25001	197	11	45	45	82	54	41	22	10,3	25	108	300	103	60	M12	200	75
05840-50001	254	10	70	70	85	57	50	28	10,3	30	127	390	136	60	M16	245	100

05880

Angle bracket

Material:
Steel.

Version:
Galvanised and passivated.

Sample order:
nlm 05880-02

Drawing reference:
1) mount clamp on this face

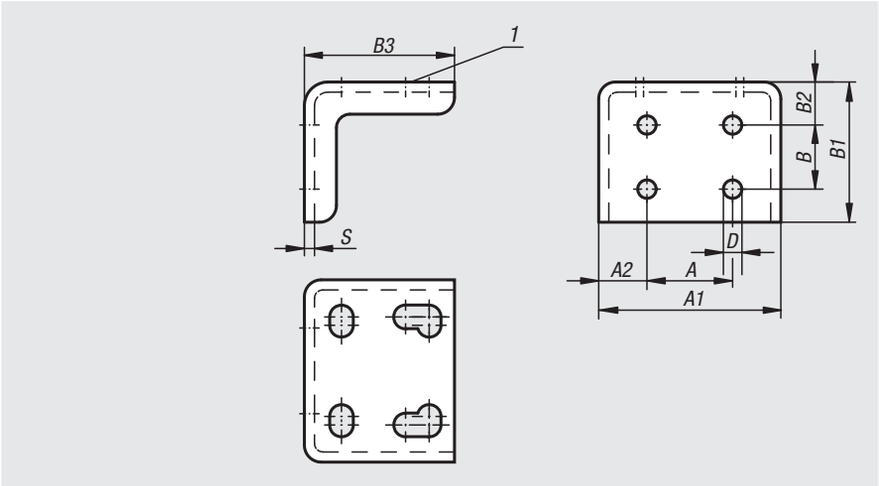

Order No.	A	A1	A2	B	B1	B2	B3	D	S
05880-02	18	43	12,5	15	36,5	13,5	29,5	5	2
05880-04	25,4	54	14,2	19	41,5	12,7	44,5	5,5	3
05880-06	44	76	16	32	62	21	66	8,6	4

05882

Plastic grips

Material:
Plastic

Version:
Orange, oil-resistant

Sample order:
nlm 05882-30

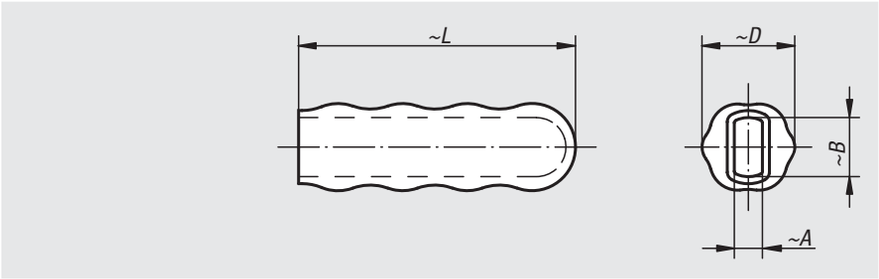

Order No.	~A	~B	~D	~L
05882-16	4	8	15	45
05882-19	6	10	19	53
05882-20	5	10	20	60
05882-22	4	13	22	58
05882-23	5	13	22	60
05882-28	6	15	26	85
05882-30	8	17	31	105
05882-32	8	19	31	105
05882-33	8	22	32	115
05882-34	10	22	32	95
05882-35	10	25	35	120

Technical information

Quick clamping - reliable fastening

Durable and reliable
Now even more durable, more user-friendly and safer. This is the design aim that has been achieved in the new generation. You, the user, will notice the difference immediately: On first contact, the new toggle clamp has a good grip and is robust. It delivers fast, reliable and safe operation. High quality material ensures the necessary holding power.

Advantages:

Impressively stable:
All models can easily withstand 300,000 clamping cycles

Durable:
High-quality bushings - without scoring

Extremely robust:
Corrosion-resistant NITROX COATING or stainless steel

Simple design
The fixed top nut eases spindle adjustment

Reliable:
Uniform force during opening and closing

Ideal where space is restricted:
Slim design supports safe operation

Optimum stability:
Conical clamping arm with U-profile

Safe application:
Nothing catches on the smooth edges

Fast and flexible:
Easy retrofitting thanks to a wide range of accessories

Ergonomic and slip-resistant:
Easy to operate when wearing work gloves

Non-reflecting
The NITROX-SURFACE is ideal for use with laser devices

Safe when opening:
More space between clamping arm and grip prevents pinching

Extremely compatible:
Oblong holes allows assembly on existing holes

Secure fixation and locking with safety lock:
The inner locking system is a completely revolutionary development. Nothing gets caught or stuck. Operation is easy even when wearing work gloves.

Operating principle of the safety locking mechanism:

Fig. 1:
Engaged.
No risk of injury thanks to revolutionary grip - no pinching or interfering contours.

Fig. 2:
Disengaged.
Pulling the grip releases the internal locking pin.

Toggle clamps horizontal

with flat foot and adjustable clamping spindle

Material:
Steel.
Grip polyamide.

Version:
Nitro-carburized and black oxidized.

Sample order:
nlm 05900-004002

Note:
Maintenance-free high quality link bushings. Sustainable constant force during opening and closing. Optimum stability through the conical, U-profile clamping arm.

Accessories:
05280 Protective caps
05880 Angle brackets
07110 Ball-end thrust screws
07117 Grippers, adjustable
07120 Grub screws with thrust point DIN 6332
07121 Grub screws with ball thrust point
07140 Thrust pads DIN 6311
07142 Thrust pads

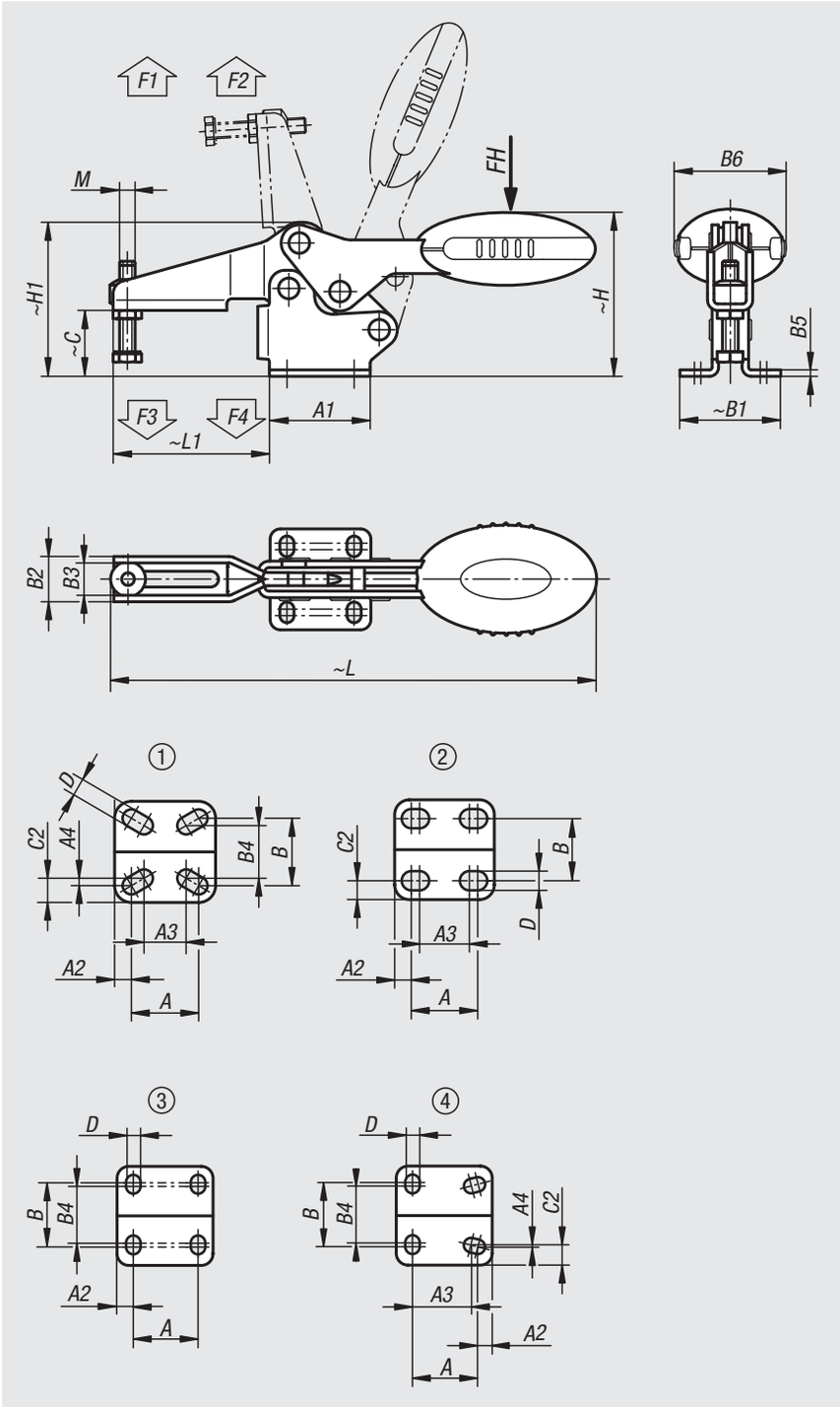

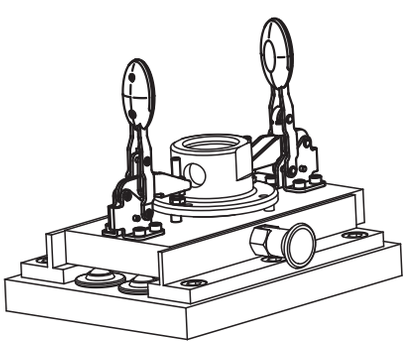

Toggle clamps horizontal

with flat foot and adjustable clamping spindle

Order No.	hole arrangement	Opening angle of holding arm	Opening angle of handle	Hand force FH N	Retaining force F1 N	Retaining force F2 N	Clamping force F3 N	Clamping force F4 N	Order No. Angle bracket
05900-004002	1	87°	69°	80	400	500	250	300	05880-02
05900-005002	2	86°	67°	100	650	900	550	620	05880-02
05900-006002	3	86°	67°	160	1350	1900	720	1200	05880-04
05900-008002	3	86°	67°	200	2000	2800	830	1400	05880-04
05900-010002	3	90°	71°	250	2200	4500	1200	2800	05880-06
05900-012002	4	88°	68°	280	2400	5500	1000	2800	05880-06

Order No.	M	A	A1	A2	A3	A4	B	B1	B2	B3	B4	B5	B6	C	C2	D	H	H1	L	L1
05900-004002	M4x16	16	24	4	12,8	0,95	16	24	10,2	7,2	12,5	1,5	20	11,7	4,95	4,2	28,7	26,3	91,8	23,7
05900-005002	M5x25	18	27	4,5	13,5	-	16,8	27,3	13,2	9,2	-	2	22,5	17,2	5,25	5,5	43,4	38,9	125,7	41,8
05900-006002	M6x35	26	39	6,5	-	-	28	39	17,5	12,5	23	2,5	43,5	25,4	-	5,5	63,7	59,6	186,6	60,5
05900-008002	M8x45	26	44	9	-	-	31	45	21	16	24	2,5	41,5	32,2	-	6,2	73,9	70,1	223,1	74,9
05900-010002	M10x55	41,5	59	9	-	-	43	59	26	19	39	3,5	47	40	-	8,8	94,8	88	279,4	103,9
05900-012002	M12x70	44	65	10	40	1	42	67	28	21	40	3,5	47	52,3	13,5	8,5	104,8	101,6	314,7	122

Toggle clamps horizontal

with flat foot and adjustable clamping spindle, stainless steel

Material:
Stainless steel.
Grip polyamide.

Version:
Bright.

Sample order:
nlm 05900-104002

Note:
Maintenance-free high quality link bushings. Sustainable constant force during opening and closing. Optimum stability through the conical, U-profile clamping arm.

Accessories:
05280 Protective caps
07111 Ball-end thrust screws, stainless steel
07119 Thrust screws, stainless steel
07120 Grub screws with thrust point DIN 6332
07140 Thrust pads DIN 6311

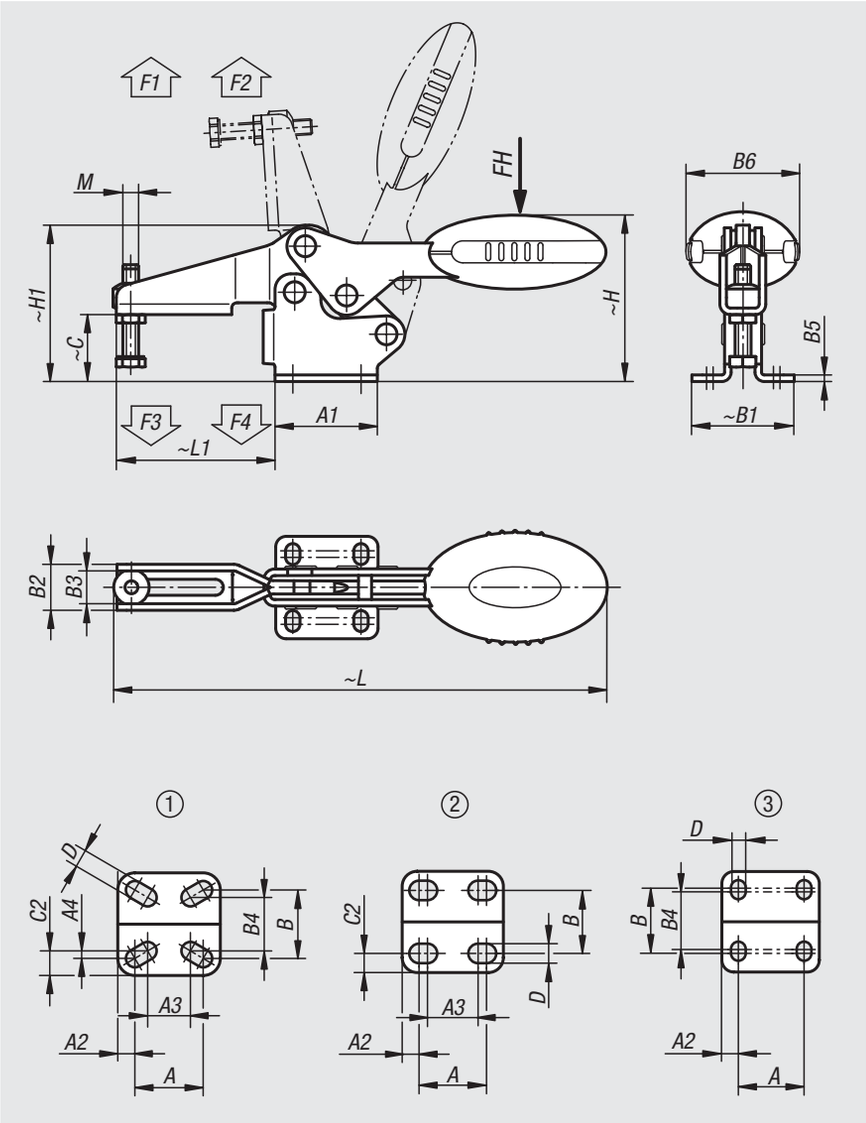

Order No.	hole arrangement	Opening angle of holding arm	Opening angle of handle	Hand force FH N	Retaining force F1 N	Retaining force F2 N	Clamping force F3 N	Clamping force F4 N
05900-104002	1	87°	69°	80	400	500	250	300
05900-105002	2	86°	67°	100	650	900	550	620
05900-106002	3	86°	67°	160	1350	1900	720	1200
05900-108002	3	86°	67°	200	2000	2800	830	1400

Order No.	M	A	A1	A2	A3	A4	B	B1	B2	B3	B4	B5	B6	C	C2	D	H	H1	L	L1
05900-104002	M4x16	16	24	4	12,8	0,95	16	24	10,2	7,2	12,5	1,5	20	11,7	4,95	4,2	28,7	26,3	91,8	23,7
05900-105002	M5x25	18	27	4,5	13,5	-	16,8	27,3	13,2	9,2	-	2	22,5	17,2	5,25	5,5	43,4	38,9	125,7	41,8
05900-106002	M6x35	26	39	6,5	-	-	28	39	17,5	12,5	23	2,5	43,5	25,4	-	5,5	63,7	59,6	186,6	60,5
05900-108002	M8x45	26	44	9	-	-	31	45	21	16	24	2,5	41,5	32,2	-	6,2	73,9	70,1	223,1	74,9

Toggle clamps horizontal with safety interlock

with flat foot and adjustable clamping spindle

Material:
Steel.
Grip polyamide.
Unlocking bracket TPE.

Version:
Nitro-carburized and black oxidized.

Sample order:
nlm 05900-006102

Note:
Maintenance-free high quality link bushings. Sustainable constant force during opening and closing. Optimum stability through the conical, U-profile clamping arm. Including internal bar lock with automatic safety catch.

Accessories:
05280 Protective caps
05880 Angle brackets
07110 Ball-end thrust screws
07117 Grippers, adjustable
07120 Grub screws with thrust point DIN 6332
07121 Grub screws with ball thrust point
07140 Thrust pads DIN 6311
07142 Thrust pads

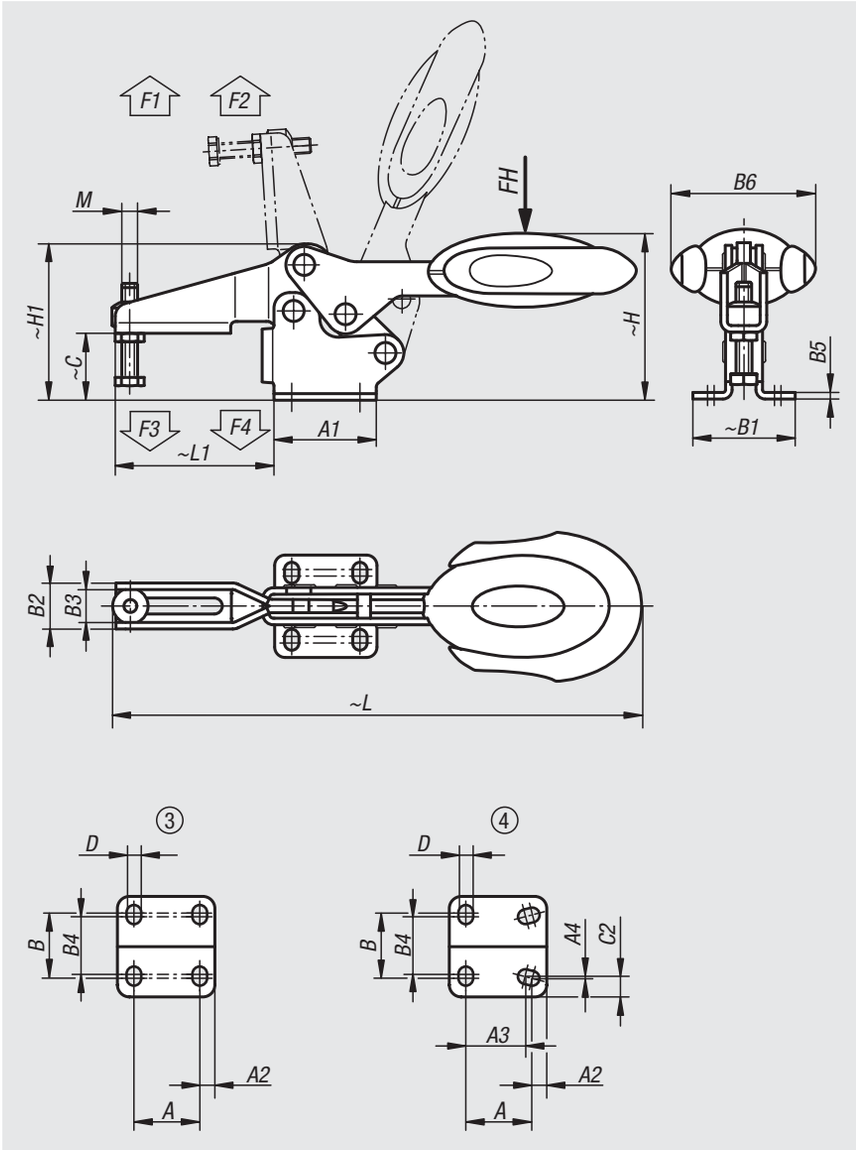

Order No.	hole arrangement	Opening angle of holding arm	Opening angle of handle	Hand force FH N	Retaining force F1 N	Retaining force F2 N	Clamping force F3 N	Clamping force F4 N	Order No. Angle bracket
05900-006102	3	86°	67°	160	1350	1900	720	1200	05880-04
05900-008102	3	86°	67°	200	2000	2800	830	1400	05880-04
05900-010102	3	90°	71°	250	2200	4500	1200	2800	05880-06
05900-012102	4	88°	68°	280	2400	5500	1000	2800	05880-06

Order No.	M	A	A1	A2	A3	A4	B	B1	B2	B3	B4	B5	B6	C	C2	D	H	H1	L	L1
05900-006102	M6x35	26	39	6,5	-	-	28	39	17,5	12,5	23	2,5	53,4	25,4	-	5,5	63,7	59,6	193,3	60,5
05900-008102	M8x45	26	44	9	-	-	31	45	21	16	24	2,5	51,1	32,2	-	6,2	73,9	70,1	230,4	74,9
05900-010102	M10x55	41,5	59	8,5	-	-	43	59	26	19	39	3,5	56,5	40	-	8,8	94,8	88	286	103,9
05900-012102	M12x70	44	65	10	40	1	42	67	28	21	40	3,5	56,5	52,3	13,5	8,5	104,8	101,6	321,3	122

Toggle clamps horizontal with safety interlock

with flat foot and adjustable clamping spindle, stainless steel

Material:
Stainless steel.
Grip polyamide.
Unlocking bracket TPE.

Version:
Bright.

Sample order:
nlm 05900-106102

Note:
Maintenance-free high quality link bushings. Sustainable constant force during opening and closing. Optimum stability through the conical, U-profile clamping arm. Including internal bar lock with automatic safety catch.

Accessories:
05280 Protective caps
07111 Ball-end thrust screws, stainless steel
07119 Thrust screws, stainless steel
07120 Grub screws with thrust point DIN 6332
07140 Thrust pads DIN 6311

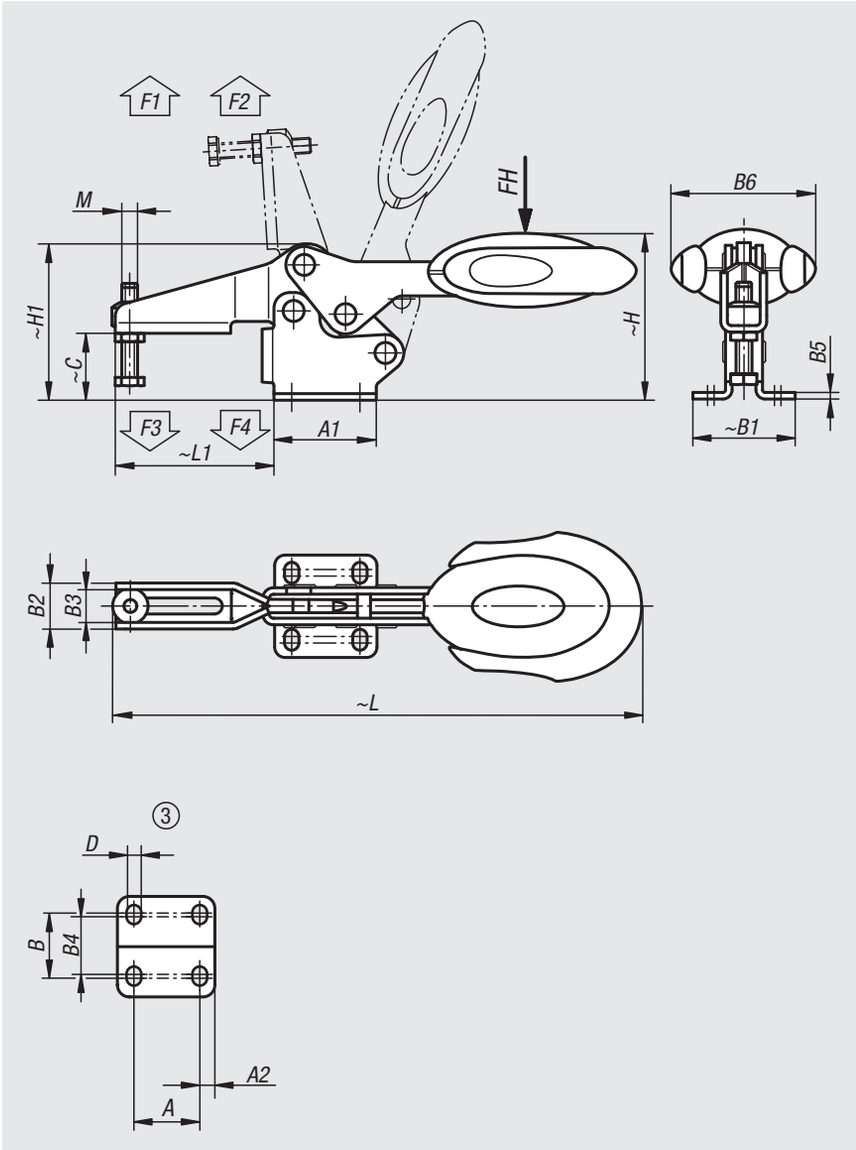

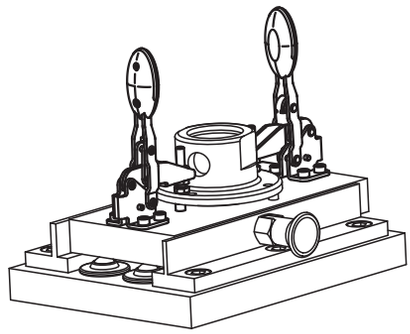

Order No.	hole arrangement	Opening angle of holding arm	Opening angle of handle	Hand force FH N	Retaining force F1 N	Retaining force F2 N	Clamping force F3 N	Clamping force F4 N
05900-106102	3	86°	67°	160	1350	1900	720	1200
05900-108102	3	86°	67°	200	2000	2800	830	1400

Order No.	M	A	A1	A2	B	B1	B2	B3	B4	B5	B6	C	D	H	H1	L	L1
05900-106102	M6x35	26	39	6,5	28	39	17,5	12,5	23	2,5	53,4	25,4	5,5	63,7	59,6	193,3	60,5
05900-108102	M8x45	26	44	9	31	45	21	16	24	2,5	51,1	32,2	6,2	73,9	70,1	230,4	74,9

Toggle clamps horizontal

with straight foot and adjustable clamping spindle

Material:
Steel.
Grip polyamide.

Version:
Nitro-carburized and black oxidized.

Sample order:
nlm 05904-005002

Note:
Maintenance-free high quality link bushings. Sustainable constant force during opening and closing. Optimum stability through the conical, U-profile clamping arm.

Accessories:
05280 Protective caps
07110 Ball-end thrust screws
07117 Grippers, adjustable
07120 Grub screws with thrust point DIN 6332
07121 Grub screws with ball thrust point
07140 Thrust pads DIN 6311
07142 Thrust pads

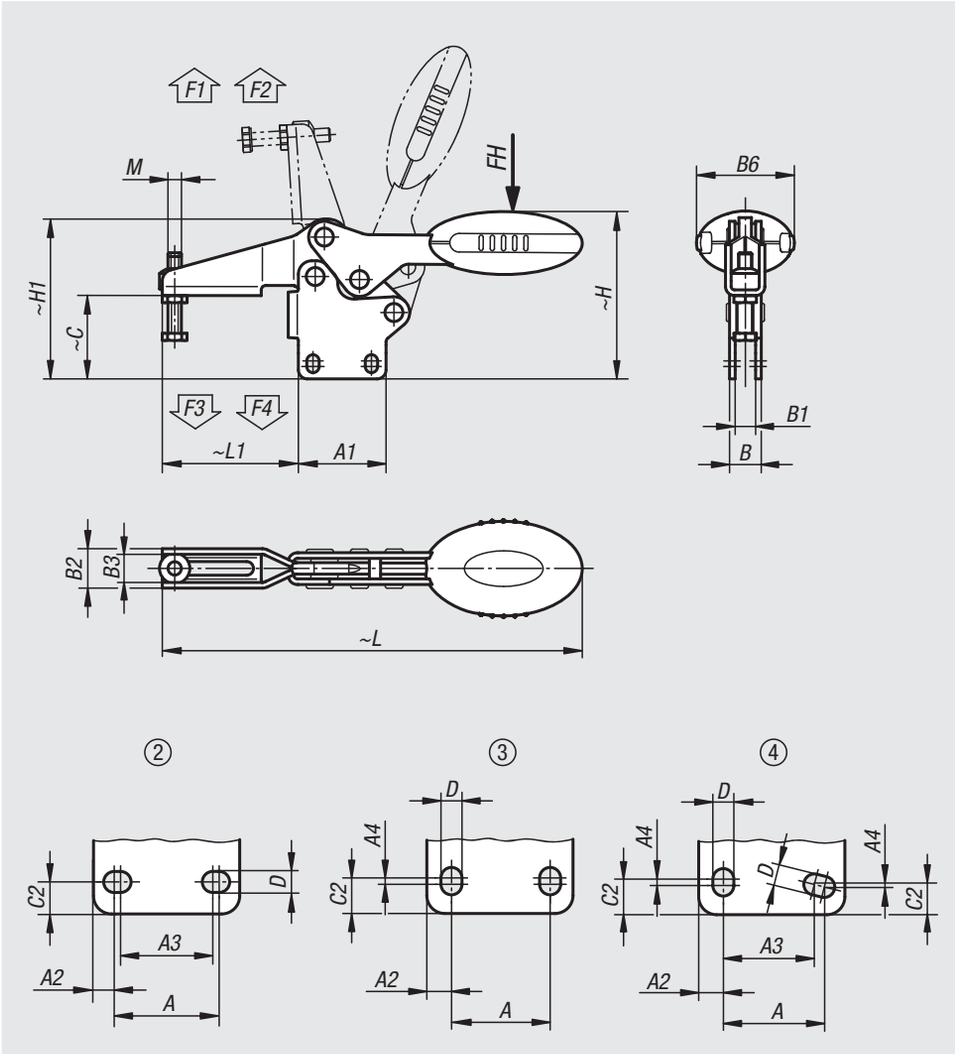

Order No.	hole arrangement	Opening angle of holding arm	Opening angle of handle	Hand force FH N	Retaining force F1 N	Retaining force F2 N	Clamping force F3 N	Clamping force F4 N
05904-005002	2	86°	67°	100	650	900	550	620
05904-006002	3	86°	67°	160	1350	1900	720	1200
05904-008002	3	86°	67°	200	2000	2800	830	1400
05904-010002	3	90°	71°	250	2200	4500	1200	2800
05904-012002	4	88°	68°	280	2400	5500	1000	2800

Order No.	M	A	A1	A2	A3	A4	B	B1	B2	B3	B6	C	C2	D	H	H1	L	L1
05904-005002	M5x25	18	27	4,5	13,5	-	8,1	4,1	13,2	9,2	22,5	26,2	5,2	5,5	52,2	47,9	125,7	41,8
05904-006002	M6x35	26	39	6,5	-	2,5	14,1	9,1	17,5	12,5	43,5	36,9	8	5,5	75,2	71	186,6	60,5
05904-008002	M8x45	26	44	9	-	3,5	14,1	9,1	21	16	41,5	46,5	10,5	6,2	88,2	84,3	223,1	74,9
05904-010002	M10x55	41,5	59	9	-	2	16,2	9,2	26	19	47	59,6	10	8,8	114,3	107,5	279,4	103,9
05904-012002	M12x70	44	65	11	40	1	16,2	9,2	28	21	47	75,9	13,5	8,5	128,4	125,2	314,7	122

Toggle clamps horizontal

with straight foot and adjustable clamping spindle, stainless steel

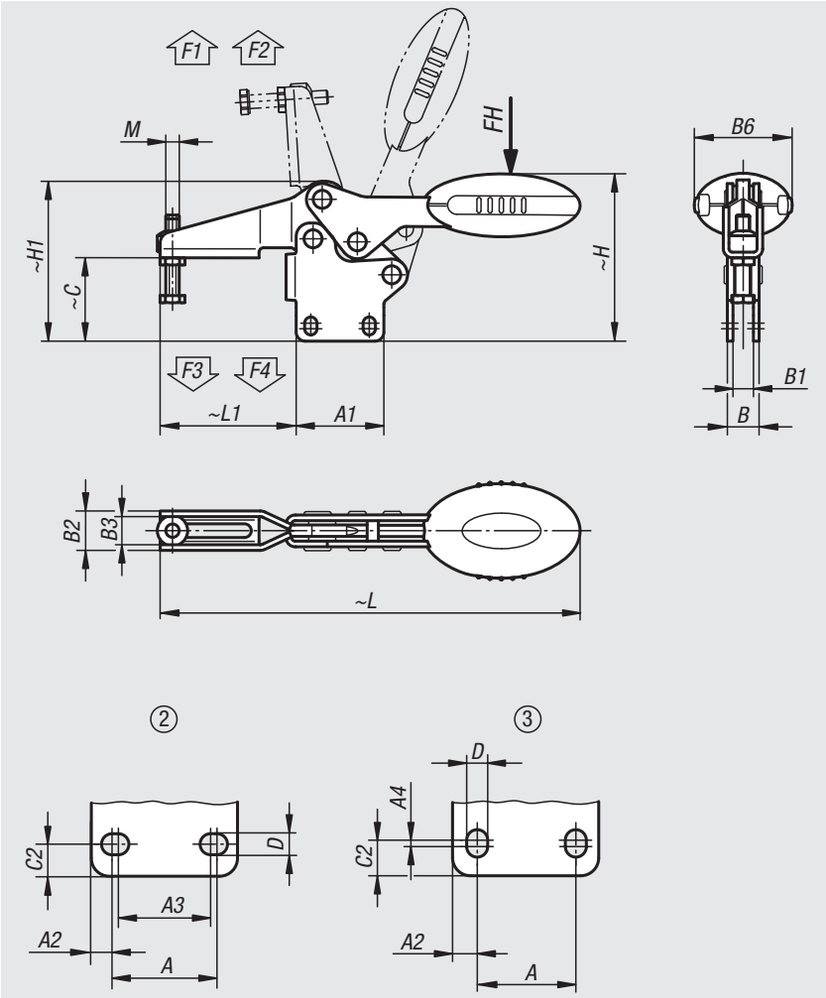

Material:
Stainless steel.
Grip polyamide.

Version:
Bright.

Sample order:
nlm 05904-105002

Note:
Maintenance-free high quality link bushings. Sustainable constant force during opening and closing. Optimum stability through the conical, U-profile clamping arm.

Accessories:
05280 Protective caps
07111 Ball-end thrust screws, stainless steel
07119 Thrust screws, stainless steel
07120 Grub screws with thrust point DIN 6332
07140 Thrust pads DIN 6311

Order No.	hole arrangement	Opening angle of holding arm	Opening angle of handle	Hand force FH N	Retaining force F1 N	Retaining force F2 N	Clamping force F3 N	Clamping force F4 N
05904-105002	2	86°	67°	100	650	900	550	620
05904-106002	3	86°	67°	160	1350	1900	720	1200
05904-108002	3	86°	67°	200	2000	2800	830	1400

Order No.	M	A	A1	A2	A3	A4	B	B1	B2	B3	B6	C	C2	D	H	H1	L	L1
05904-105002	M5x25	18	27	4,5	13,5	-	8,1	4,1	13,2	9,2	22,5	26,2	5,2	5,5	52,2	47,9	125,7	41,8
05904-106002	M6x35	26	39	6,5	-	2,5	14,1	9,1	17,5	12,5	43,5	36,9	8	5,5	75,2	71	186,6	60,5
05904-108002	M8x45	26	44	9	-	3,5	14,1	9,1	21	16	41,5	46,5	10,5	6,2	88,2	84,3	223,1	74,9

Toggle clamps horizontal with safety interlock

with straight foot and adjustable clamping spindle

Material:
Steel.
Grip polyamide.
Unlocking bracket TPE.

Version:
Nitro-carburized and black oxidized.

Sample order:
nlm 05904-006102

Note:
Maintenance-free high quality link bushings. Sustainable constant force during opening and closing. Optimum stability through the conical, U-profile clamping arm. Including internal bar lock with automatic safety catch.

Accessories:
05280 Protective caps
07110 Ball-end thrust screws
07117 Grippers, adjustable
07120 Grub screws with thrust point DIN 6332
07121 Grub screws with ball thrust point
07140 Thrust pads DIN 6311
07142 Thrust pads

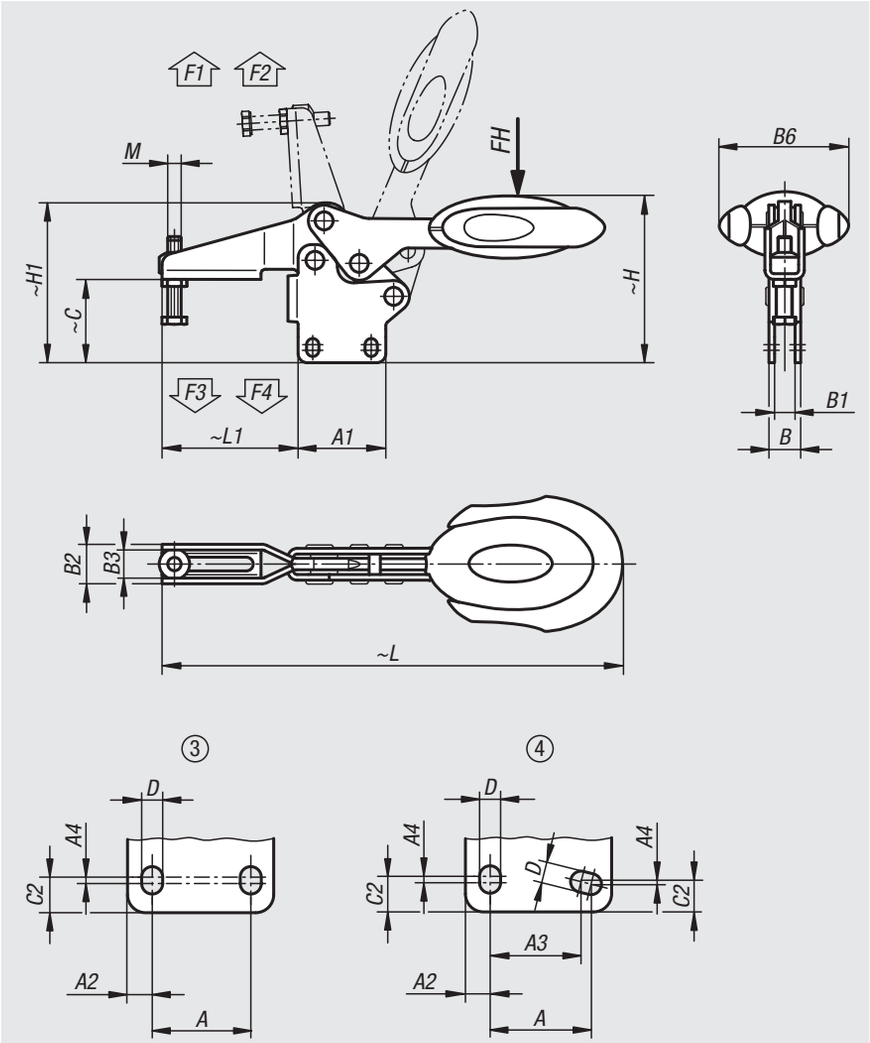

Order No.	hole arrangement	Opening angle of holding arm	Opening angle of handle	Hand force FH N	Retaining force F1 N	Retaining force F2 N	Clamping force F3 N	Clamping force F4 N
05904-006102	3	86°	67°	160	1350	1900	720	1200
05904-008102	3	86°	67°	200	2000	2800	830	1400
05904-010102	3	90°	71°	250	2200	4500	1200	2800
05904-012102	4	88°	68°	280	2400	5500	1000	2800

Order No.	M	A	A1	A2	A3	A4	B	B1	B2	B3	B6	C	C2	D	H	H1	L	L1
05904-006102	M6x35	26	39	6,5	-	2,5	14,1	9,1	17,5	12,5	53,4	36,9	8	5,5	75,2	71	193,3	60,5
05904-008102	M8x45	26	44	9	-	3,5	14,1	9,1	21	16	51,1	46,5	10,5	6,2	88,2	84,3	230,4	74,9
05904-010102	M10x55	41,5	59	9	-	2	16,2	9,2	26	19	56,5	59,6	10	8,8	114,3	107,5	286	103,9
05904-012102	M12x70	44	65	11	40	1	16,2	9,2	28	21	56,5	75,9	13,5	8,5	128,4	125,2	321,3	122

Toggle clamps horizontal with safety interlock

with straight foot and adjustable clamping spindle, stainless steel

Material:
Stainless steel.
Grip polyamide.
Unlocking bracket TPE.

Version:
Bright.

Sample order:
nlm 05904-106102

Note:
Maintenance-free high quality link bushings. Sustainable constant force during opening and closing. Optimum stability through the conical, U-profile clamping arm. Including internal bar lock with automatic safety catch.

Accessories:
05280 Protective caps
07111 Ball-end thrust screws, stainless steel
07119 Thrust screws, stainless steel
07120 Grub screws with thrust point DIN 6332
07140 Thrust pads DIN 6311

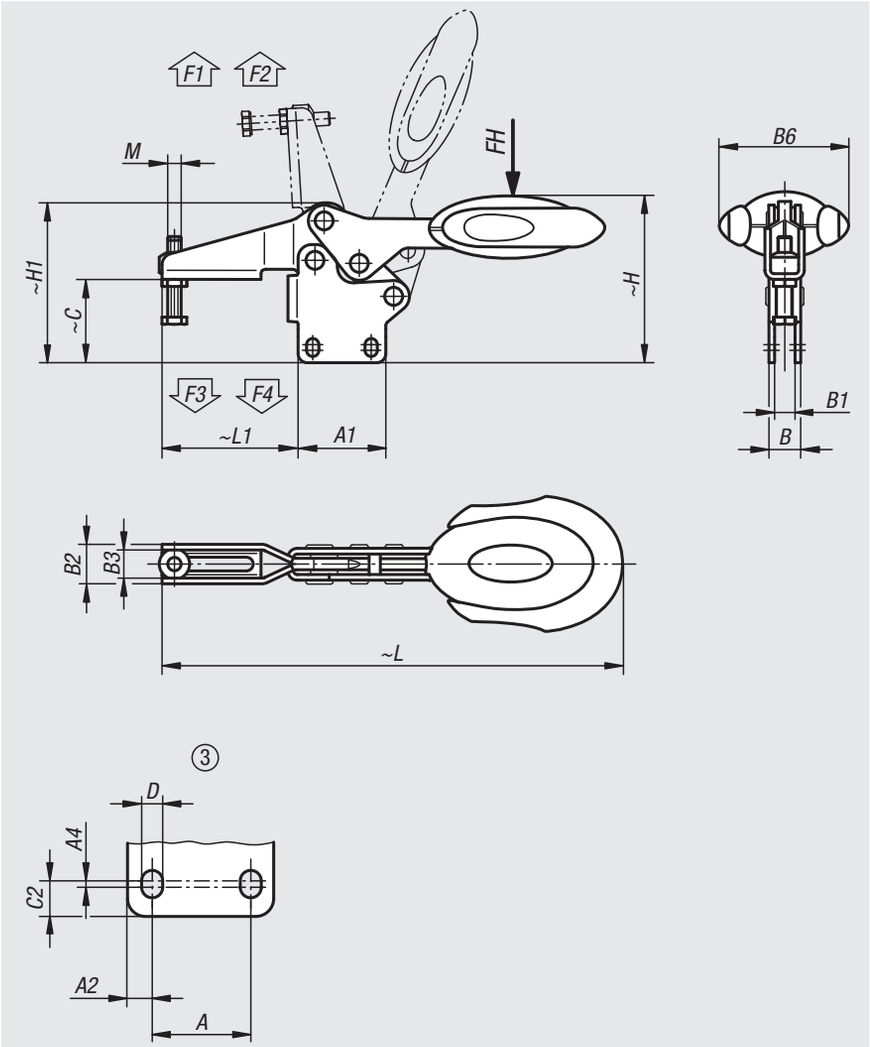

Order No.	hole arrangement	Opening angle of holding arm	Opening angle of handle	Hand force FH N	Retaining force F1 N	Retaining force F2 N	Clamping force F3 N	Clamping force F4 N
05904-106102	3	86°	67°	160	1350	1900	720	1200
05904-108102	3	86°	67°	200	2000	2800	830	1400

Order No.	M	A	A1	A2	A4	B	B1	B2	B3	B6	C	C2	D	H	H1	L	L1
05904-106102	M6x35	26	39	6,5	2,5	14,1	9,1	17,5	12,5	53,4	36,9	8	5,5	75,2	71	193,3	60,5
05904-108102	M8x45	26	44	9	3,5	14,1	9,1	21	16	51,1	46,5	10,5	6,2	88,2	84,3	230,4	74,9

Notes

Toggle clamps vertical

with flat foot and adjustable clamping spindle

Material:
Steel.
Grip polyamide.

Version:
Nitro-carburized and black oxidized.

Sample order:
nlm 05908-005002

Note:
Maintenance-free high quality link bushings. Sustainable constant force during opening and closing. Optimum stability through the conical, U-profile clamping arm.

Accessories:
05280 Protective caps
05880 Angle brackets
07110 Ball-end thrust screws
07117 Grippers, adjustable
07120 Grub screws with thrust point DIN 6332
07121 Grub screws with ball thrust point
07140 Thrust pads DIN 6311
07142 Thrust pads

Drawing reference:
1) stop pin position 1
2) stop pin position 2

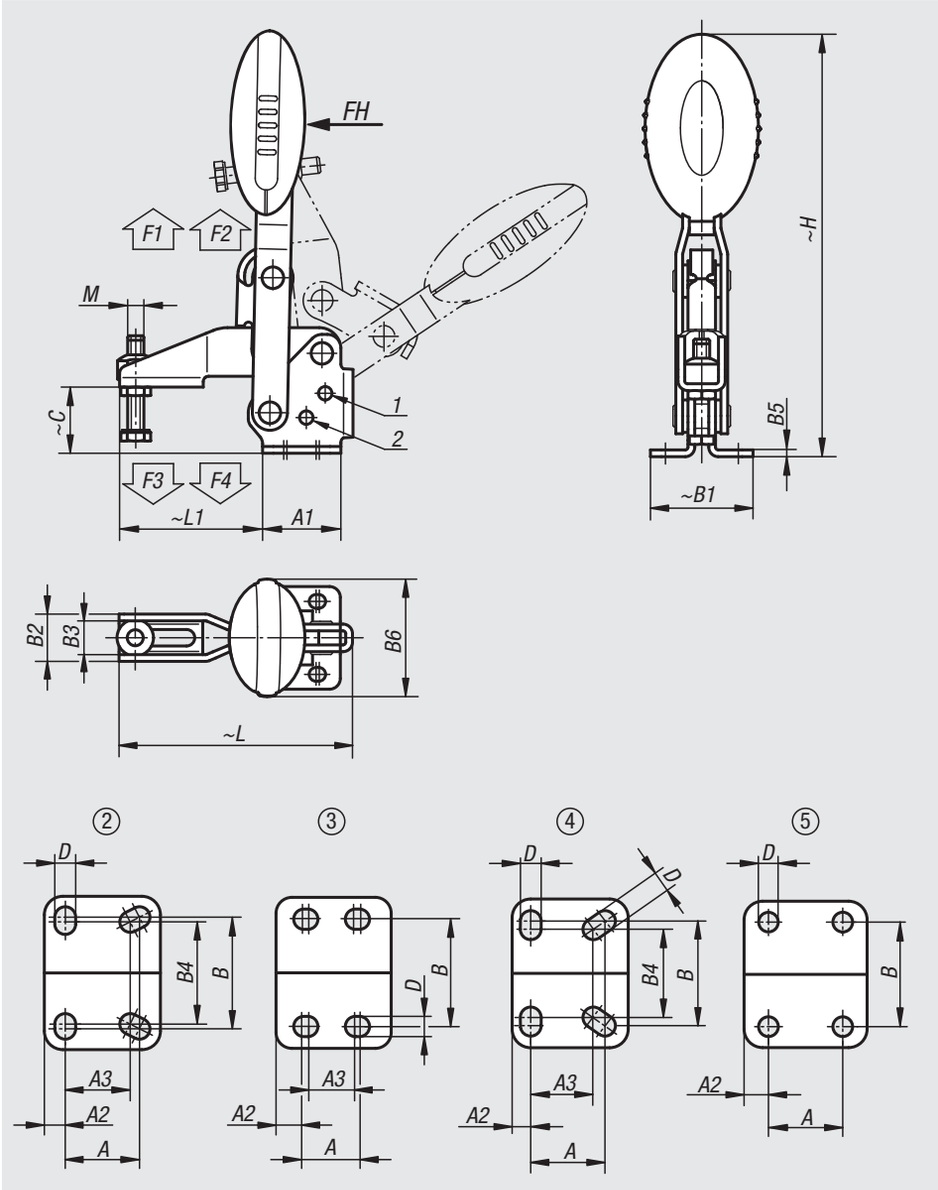

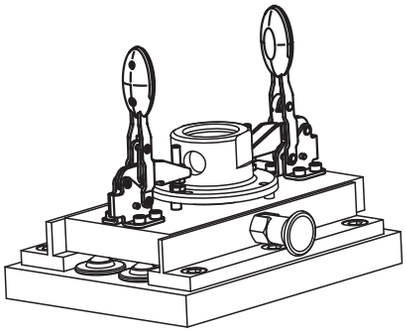

Toggle clamps vertical

with flat foot and adjustable clamping spindle

Order No.	Opening angle holding arm position 1	Opening angle holding arm position 2	Opening angle holding arm stop pin removed	Opening angle handle position 1	Opening angle handle position 2	Opening angle handle stop pin removed
05908-005002	100°	-	147°	64°	-	83°
05908-006002	56°	83°	152°	46°	56°	83°
05908-008002	13°	93°	158°	26°	61°	86°
05908-010002	6°	97°	176°	19°	59°	91°
05908-012002	11°	88°	164°	24°	60°	91°

Order No.	Hand force FH N	Retaining force F1 N	Retaining force F2 N	Clamping force F3 N	Clamping force F4 N	Order No. Angle bracket
05908-005002	100	750	1050	620	750	05880-02
05908-006002	160	1350	1650	920	1050	05880-02
05908-008002	190	2000	2800	940	1350	05880-04
05908-010002	250	2500	4500	1500	2800	05880-06
05908-012002	280	3000	5500	1400	2800	05880-06

Order No.	hole arrangement	M	A	A1	A2	A3	B	B1	B2	B3	B4	B5	B6	C	D	H	L	L1
05908-005002	2	M5x25	16	25	4,5	14	24	33	13,2	9,2	22	2	22,5	18	4,5	107,4	65,6	35
05908-006002	3	M6x35	14	29	7	12	27	38	17,5	12,5	-	2,5	43,5	24,9	5,5	156,3	86,5	53
05908-008002	3	M8x45	21	39	9	19	32	45	20,6	15,6	-	2,5	41,5	32,7	6,8	184,2	107	62
05908-010002	4	M10x55	32	50	8	27	45	64	25,5	18,5	38	3,5	47	38,7	9	223,9	153	95
05908-012002	5	M12x70	32	53	10,5	-	45	63	28	21	-	3,5	47	46,7	8,8	242,4	173,5	113,5

Toggle clamps vertical

with flat foot and adjustable clamping spindle, stainless steel

Material:
Stainless steel.
Grip polyamide.

Version:
Bright.

Sample order:
nlm 05908-105002

Note:
Maintenance-free high quality link bushings. Sustainable constant force during opening and closing. Optimum stability through the conical, U-profile clamping arm.

Accessories:
05280 Protective caps
07111 Ball-end thrust screws, stainless steel
07119 Thrust screws, stainless steel
07120 Grub screws with thrust point DIN 6332
07140 Thrust pads DIN 6311

Drawing reference:
1) stop pin position 1
2) stop pin position 2

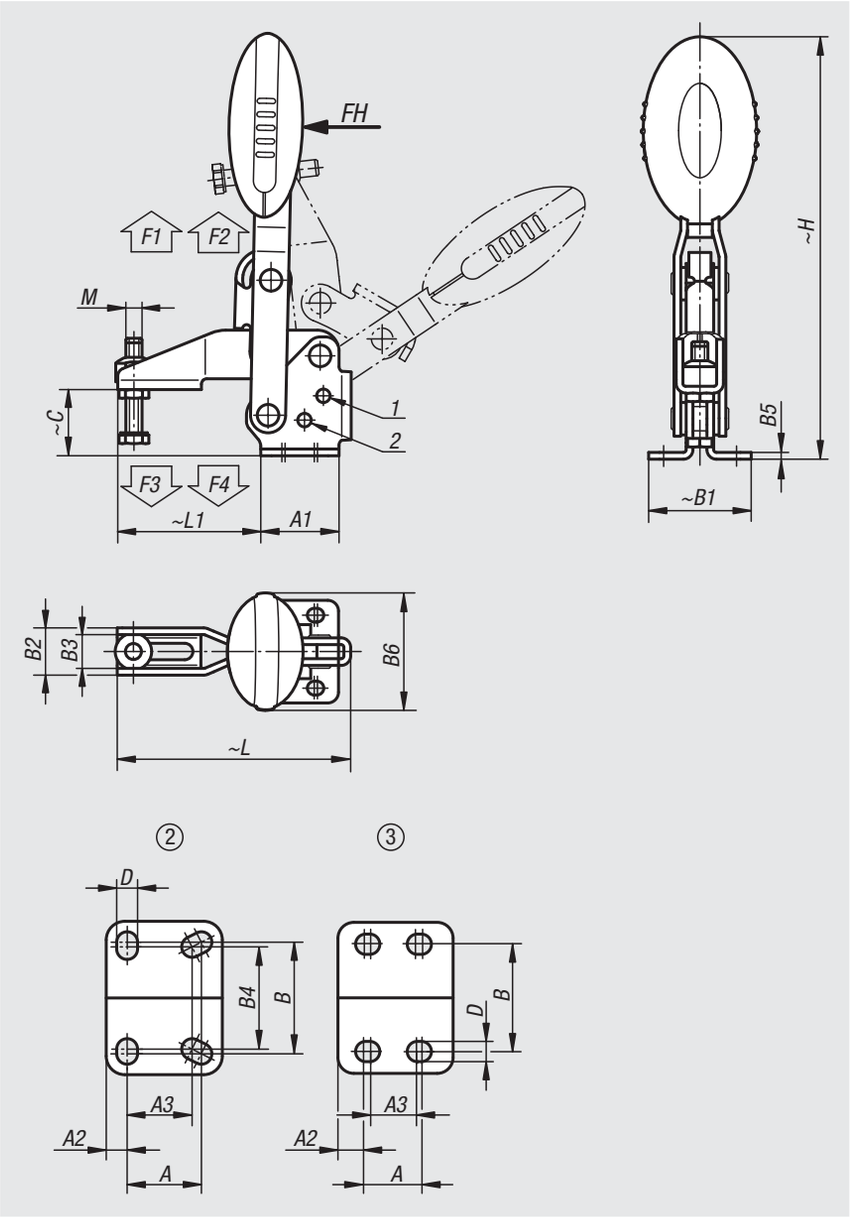

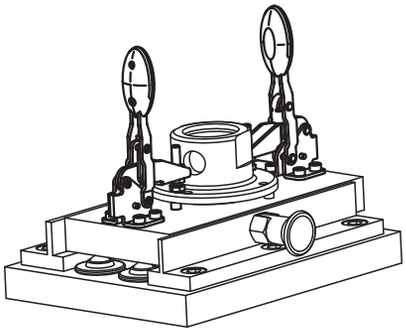

Toggle clamps vertical

with flat foot and adjustable clamping spindle, stainless steel

Order No.	Opening angle holding arm position 1	Opening angle holding arm position 2	Opening angle holding arm stop pin removed	Opening angle handle position 1	Opening angle handle position 2	Opening angle handle stop pin removed
05908-105002	100°	-	147°	64°	-	83°
05908-106002	56°	83°	152°	46°	56°	83°
05908-108002	13°	93°	158°	26°	61°	86°

Order No.	Hand force FH N	Retaining force F1 N	Retaining force F2 N	Clamping force F3 N	Clamping force F4 N
05908-105002	100	750	1050	620	750
05908-106002	160	1350	1650	920	1050
05908-108002	190	2000	2800	940	1350

Order No.	hole arrangement	M	A	A1	A2	A3	B	B1	B2	B3	B4	B5	B6	C	D	H	L	L1
05908-105002	2	M5x25	16	25	4,5	14	24	33	13,2	9,2	22	2	22,5	18	4,5	107,4	65,6	35
05908-106002	3	M6x35	14	29	7	12	27	38	17,5	12,5	-	2,5	43,5	24,9	5,5	156,3	86,5	53
05908-108002	3	M8x45	21	39	9	19	32	45	20,6	15,6	-	2,5	41,5	32,7	6,8	184,2	107	62

Toggle clamps vertical with safety interlock

with flat foot and adjustable clamping spindle

Material:
Steel.
Grip polyamide.
Unlocking bracket TPE.

Version:
Nitro-carburized and black oxidized.

Sample order:
nlm 05908-006102

Note:
Maintenance-free high quality link bushings. Sustainable constant force during opening and closing. Optimum stability through the conical, U-profile clamping arm. Including internal bar lock with automatic safety catch.

Accessories:
05280 Protective caps
05880 Angle brackets
07110 Ball-end thrust screws
07117 Grippers, adjustable
07120 Grub screws with thrust point DIN 6332
07121 Grub screws with ball thrust point
07140 Thrust pads DIN 6311
07142 Thrust pads

Drawing reference:
1) stop pin position 1
2) stop pin position 2

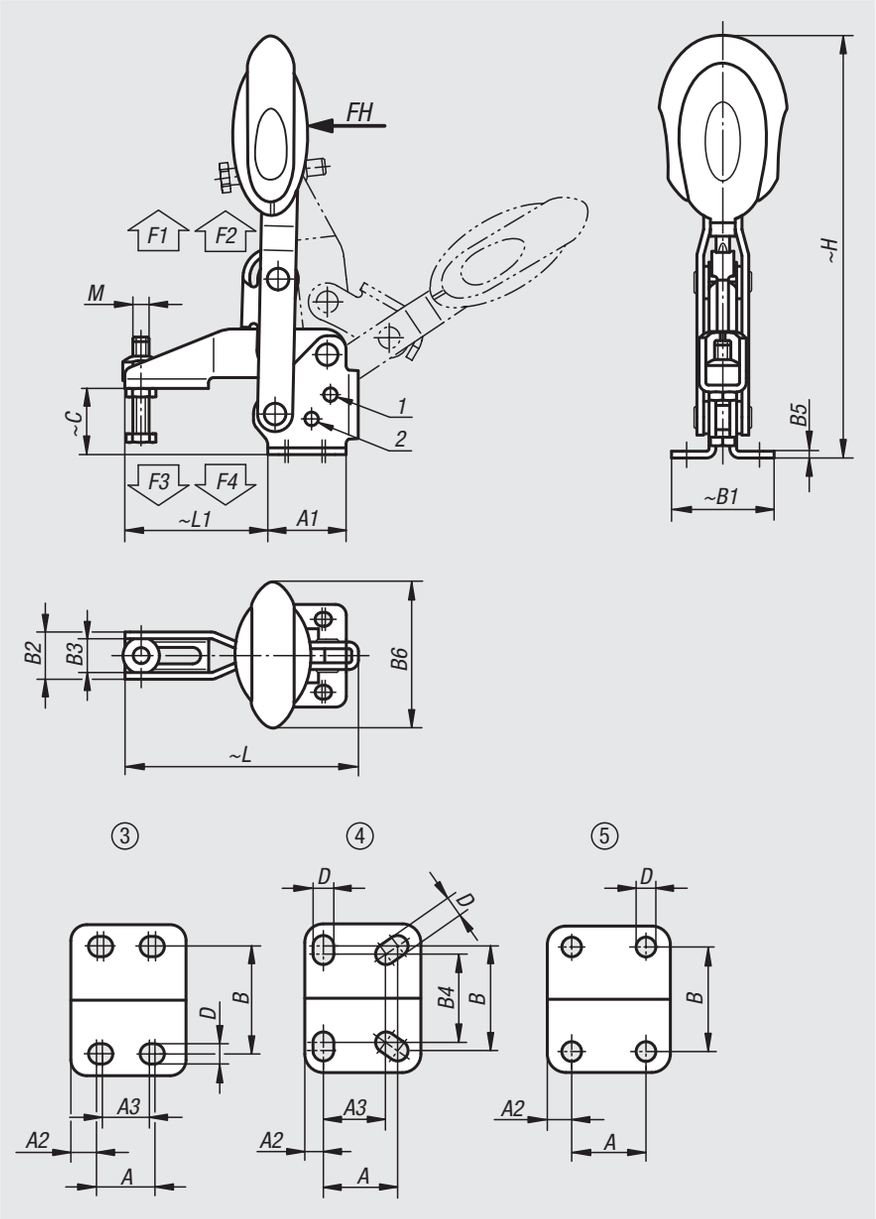

Toggle clamps vertical with safety interlock

with flat foot and adjustable clamping spindle

Order No.	Opening angle holding arm position 1	Opening angle holding arm position 2	Opening angle holding arm stop pin removed	Opening angle handle position 1	Opening angle handle position 2	Opening angle handle stop pin removed
05908-006102	56°	83°	152°	46°	56°	83°
05908-008102	13°	93°	158°	26°	61°	86°
05908-010102	6°	97°	176°	19°	59°	91°
05908-012102	11°	88°	164°	24°	60°	91°

Order No.	Hand force FH N	Retaining force F1 N	Retaining force F2 N	Clamping force F3 N	Clamping force F4 N	Order No. Angle bracket
05908-006102	160	1350	1650	920	1050	05880-02
05908-008102	190	2000	2800	940	1350	05880-04
05908-010102	250	2500	4500	1500	2800	05880-06
05908-012102	280	3000	5500	1400	2800	05880-06

Order No.	hole arrangement	M	A	A1	A2	A3	B	B1	B2	B3	B4	B5	B6	C	D	H	L	L1
05908-006102	3	M6x35	14	29	7	12	27	38	17,5	12,5	-	2,5	53,4	24,9	5,5	163	86,5	53
05908-008102	3	M8x45	21	39	9	19	32	45	20,6	15,6	-	2,5	51,1	32,7	6,8	191,4	107	62
05908-010102	4	M10x55	32	50	8	27	45	64	25,5	18,5	38	3,5	56,5	38,7	9	230,5	153	95
05908-012102	5	M12x70	32	53	10,5	-	45	63	28	21	-	3,5	56,5	46,7	8,8	249,1	173,5	113,5

Toggle clamps vertical with safety interlock

with flat foot and adjustable clamping spindle, stainless steel

Material:
Stainless steel.
Grip polyamide.
Unlocking bracket TPE.

Version:
Bright.

Sample order:
nlm 05908-106102

Note:
Maintenance-free high quality link bushings. Sustainable constant force during opening and closing. Optimum stability through the conical, U-profile clamping arm. Including internal bar lock with automatic safety catch.

Accessories:
05280 Protective caps
07111 Ball-end thrust screws, stainless steel
07119 Thrust screws, stainless steel
07120 Grub screws with thrust point DIN 6332
07140 Thrust pads DIN 6311

Drawing reference:
1) stop pin position 1
2) stop pin position 2

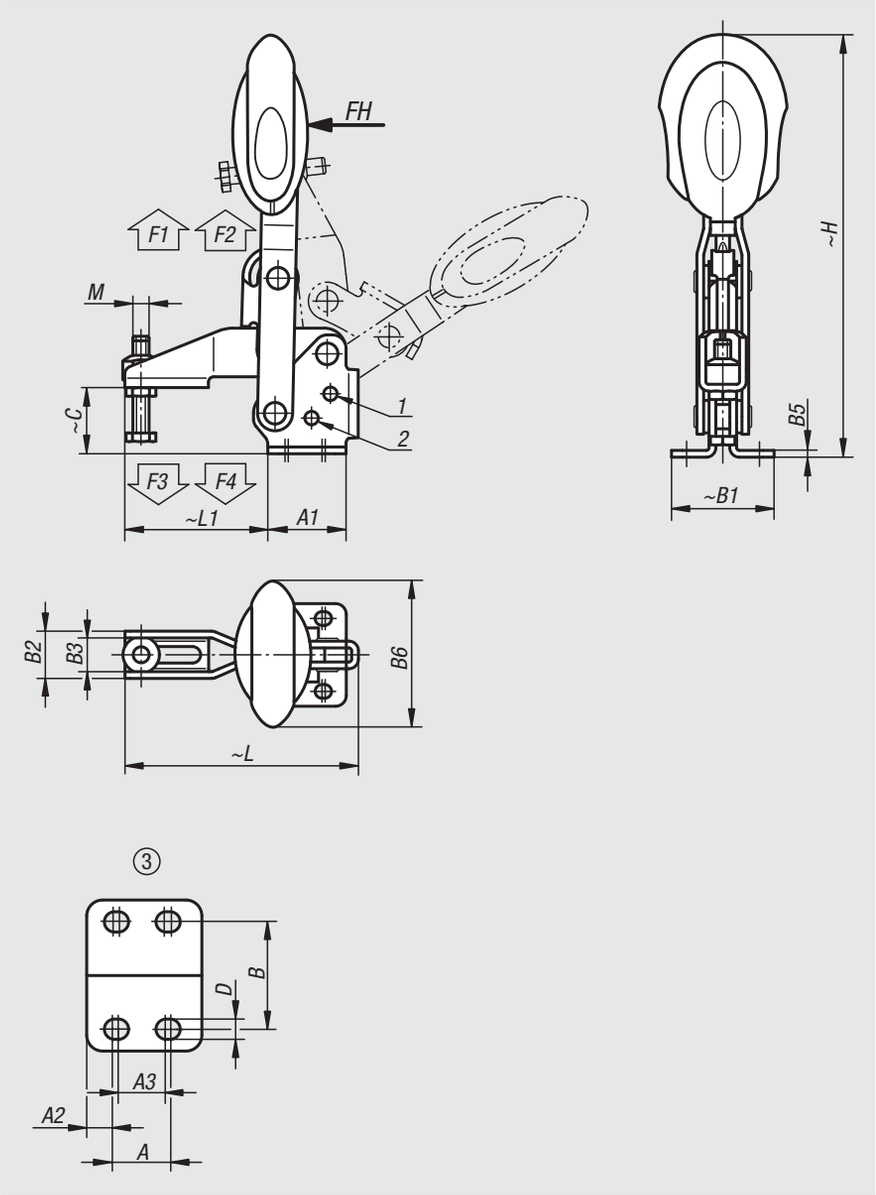

Toggle clamps vertical with safety interlock

with flat foot and adjustable clamping spindle, stainless steel

Order No.	Opening angle holding arm position 1	Opening angle holding arm position 2	Opening angle holding arm stop pin removed	Opening angle handle position 1	Opening angle handle position 2	Opening angle handle stop pin removed
05908-106102	56°	83°	152°	46°	56°	83°
05908-108102	13°	93°	158°	26°	61°	86°

Order No.	Hand force FH N	Retaining force F1 N	Retaining force F2 N	Clamping force F3 N	Clamping force F4 N
05908-106102	160	1350	1650	920	1050
05908-108102	190	2000	2800	940	1350

Order No.	hole arrangement	M	A	A1	A2	A3	B	B1	B2	B3	B5	B6	C	D	H	L	L1
05908-106102	3	M6x35	14	29	7	12	27	38	17,5	12,5	2,5	53,4	24,9	5,5	163	86,5	53
05908-108102	3	M8x45	21	39	9	19	32	45	20,6	15,6	2,5	51,1	32,7	6,8	191,4	107	62

Toggle clamps vertical

with straight foot and adjustable clamping spindle

Material:
Steel.
Grip polyamide.

Version:
Nitro-carburized and black oxidized.

Sample order:
nlm 05912-005002

Note:
Maintenance-free high quality link bushings. Sustainable constant force during opening and closing. Optimum stability through the conical, U-profile clamping arm.

Accessories:
05280 Protective caps
07110 Ball-end thrust screws
07117 Grippers, adjustable
07120 Grub screws with thrust point DIN 6332
07121 Grub screws with ball thrust point
07140 Thrust pads DIN 6311
07142 Thrust pads

Drawing reference:
1) stop pin position 1
2) stop pin position 2

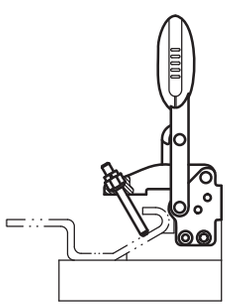

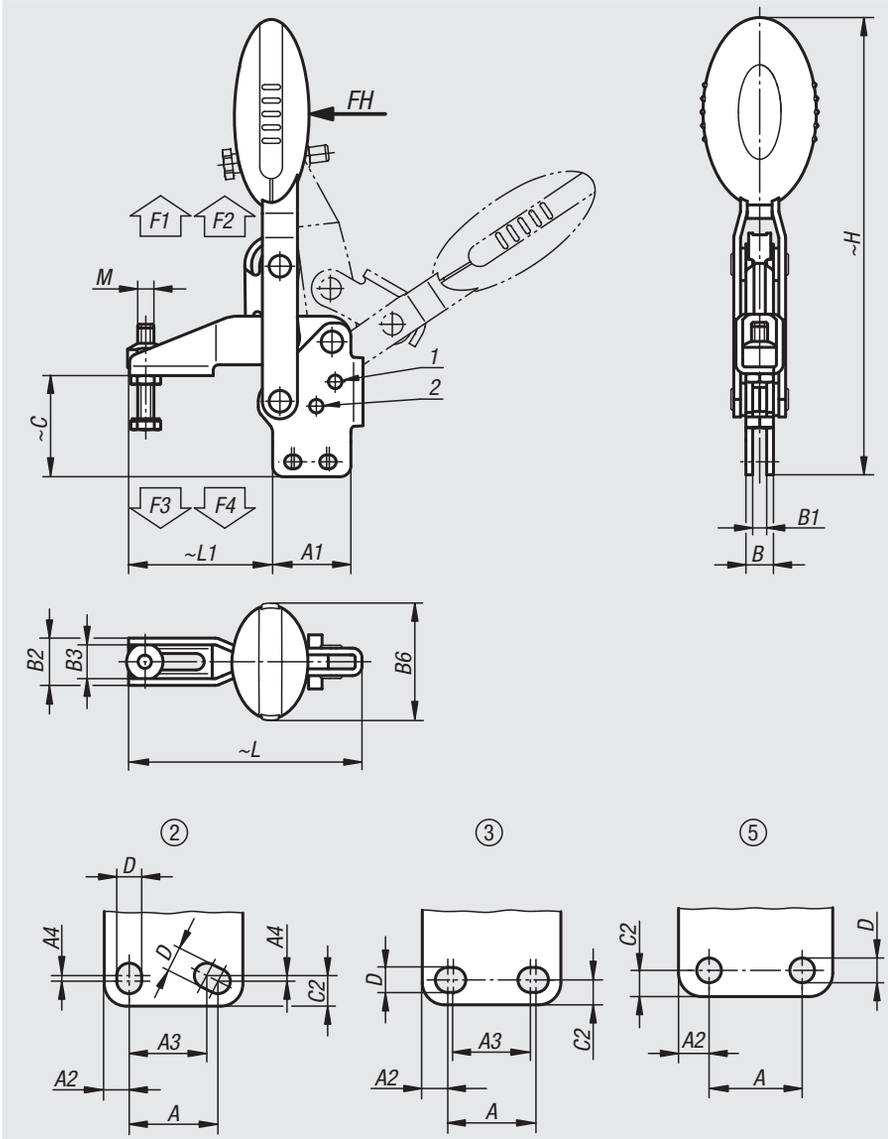

Order No.	Opening angle holding arm position 1	Opening angle holding arm position 2	Opening angle holding arm stop pin removed	Opening angle handle position 1	Opening angle handle position 2	Hand force FH N	Retaining force F1 N	Retaining force F2 N	Clamping force F3 N	Clamping force F4 N
05912-005002	100°	-	129°	64°	-	100	750	1050	620	750
05912-006002	56°	83°	141°	46°	56°	160	1350	1650	920	1050
05912-008002	13°	93°	158°	26°	61°	190	2000	2800	940	1350
05912-010002	6°	97°	176°	19°	59°	250	2500	4500	1500	2800
05912-012002	11°	88°	164°	24°	60°	280	3000	5500	1400	2800

Order No.	hole arrangement	M	A	A1	A2	A3	A4	B	B1	B2	B3	B6	C	C2	D	H	L	L1
05912-005002	2	M5x25	16	25	4,5	14	1	8,1	4,1	13,2	9,2	22,5	29,8	5,5	4,5	119,2	65,6	35
05912-006002	3	M6x35	14	29	7	12	-	10,2	5,2	17,5	12,5	43,5	37,6	5,5	5,5	169	86,5	53
05912-008002	3	M8x45	21	39	9	19	-	10,2	5,2	20,6	15,6	41,5	49	6,5	6,8	200,4	107	62
05912-010002	2	M10x55	32	50	8	27	3,5	14,1	7,1	25,5	18,5	47	62,3	13	9	247,4	153	95
05912-012002	5	M12x70	32	53	10,5	-	-	14,1	7,1	28	21	47	69,8	9	8,8	265,5	173,5	113,5

Toggle clamps vertical

with straight foot and adjustable clamping spindle, stainless steel

Material:
Stainless steel.
Grip polyamide.

Version:
Bright.

Sample order:
nlm 05912-105002

Note:
Maintenance-free high quality link bushings. Sustainable constant force during opening and closing. Optimum stability through the conical, U-profile clamping arm.

Accessories:
05280 Protective caps
07111 Ball-end thrust screws, stainless steel
07119 Thrust screws, stainless steel
07120 Grub screws with thrust point DIN 6332
07140 Thrust pads DIN 6311

Drawing reference:
1) stop pin position 1
2) stop pin position 2

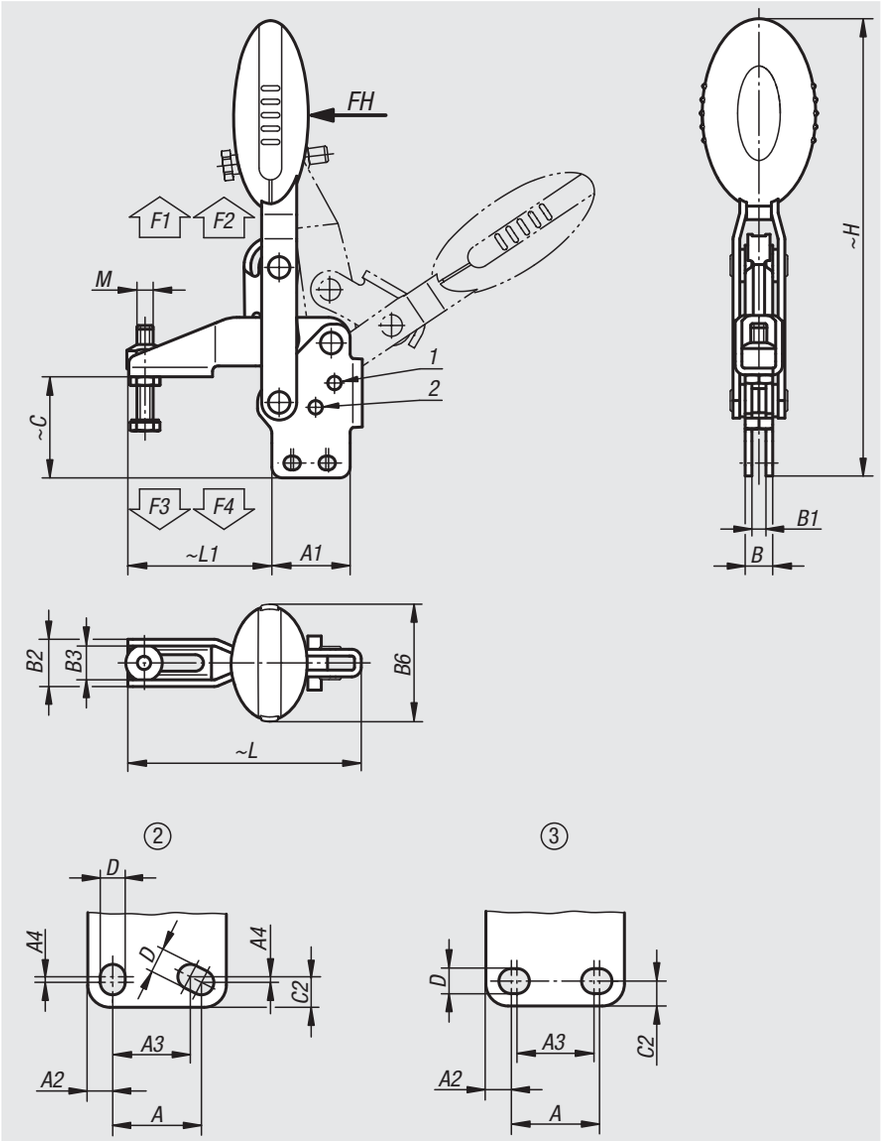

Order No.	Opening angle holding arm position 1	Opening angle holding arm position 2	Opening angle holding arm stop pin removed	Opening angle handle position 1	Opening angle handle position 2	Hand force FH N	Retaining force F1 N	Retaining force F2 N	Clamping force F3 N	Clamping force F4 N
05912-105002	100°	-	129°	64°	-	100	750	1050	620	750
05912-106002	56°	83°	141°	46°	56°	160	1350	1650	920	1050
05912-108002	13°	93°	158°	26°	61°	190	2000	2800	940	1350

Order No.	hole arrangement	M	A	A1	A2	A3	A4	B	B1	B2	B3	B6	C	C2	D	H	L	L1
05912-105002	2	M5x25	16	25	4,5	14	1	8,1	4,1	13,2	9,2	22,5	29,8	5,5	4,5	119,2	65,6	35
05912-106002	3	M6x35	14	29	7	12	-	10,2	5,2	17,5	12,5	43,5	37,6	5,5	5,5	169	86,5	53
05912-108002	3	M8x45	21	39	9	19	-	10,2	5,2	20,6	15,6	41,5	49	6,5	6,8	200,4	107	62

Toggle clamps vertical with safety interlock

with straight foot and adjustable clamping spindle

Material:
Steel.
Grip polyamide.
Unlocking bracket TPE.

Version:
Nitro-carburized and black oxidized.

Sample order:
nlm 05912-006102

Note:
Maintenance-free high quality link bushings. Sustainable constant force during opening and closing. Optimum stability through the conical, U-profile clamping arm. Including internal bar lock with automatic safety catch.

Accessories:
05280 Protective caps
07110 Ball-end thrust screws
07117 Grippers, adjustable
07120 Grub screws with thrust point DIN 6332
07121 Grub screws with ball thrust point
07140 Thrust pads DIN 6311
07142 Thrust pads

Drawing reference:
1) stop pin position 1
2) stop pin position 2

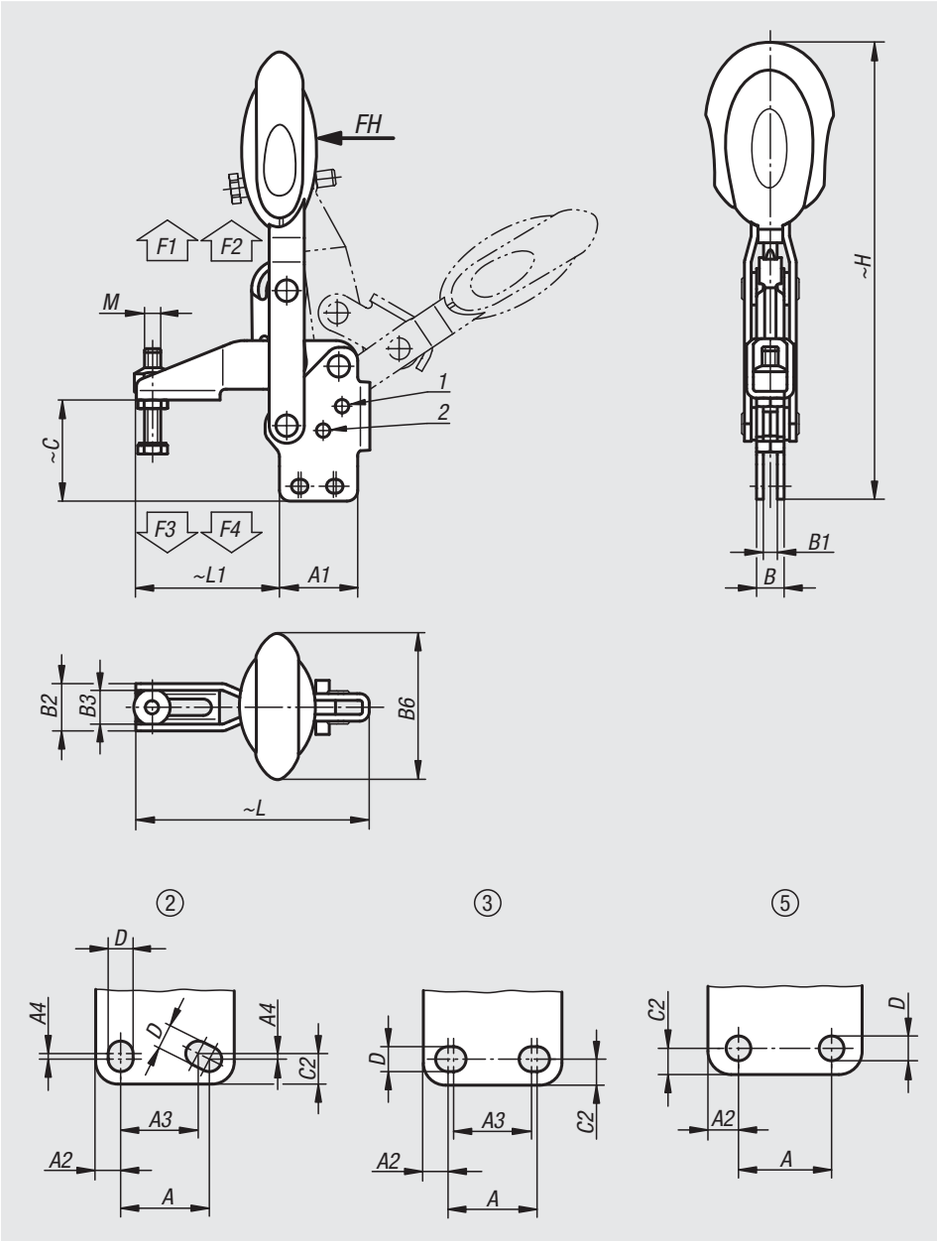

Order No.	Opening angle holding arm position 1	Opening angle holding arm position 2	Opening angle holding arm stop pin removed	Opening angle handle position 1	Opening angle handle position 2	Hand force FH N	Retaining force F1 N	Retaining force F2 N	Clamping force F3 N	Clamping force F4 N
05912-006102	56°	83°	141°	46°	56°	160	1350	1650	920	1050
05912-008102	13°	93°	158°	26°	61°	190	2000	2800	940	1350
05912-010102	6°	97°	176°	19°	59°	250	2500	4500	1500	2800
05912-012102	11°	88°	164°	24°	60°	280	3000	5500	1400	2800

Order No.	hole arrangement	M	A	A1	A2	A3	A4	B	B1	B2	B3	B6	C	C2	D	H	L	L1
05912-006102	3	M6x35	14	29	7	12	-	10,2	5,2	17,5	12,5	53,4	37,6	5,5	5,5	175,7	86,5	53
05912-008102	3	M8x45	21	39	9	19	-	10,2	5,2	20,6	15,6	51,1	49	6,5	6,8	207,6	107	62
05912-010102	2	M10x55	32	50	8	27	3,5	14,1	7,1	25,5	18,5	56,5	62,3	13	9	254	153	95
05912-012102	5	M12x70	32	53	10,5	-	-	14,1	7,1	28	21	56,5	69,8	9	8,8	272,1	173,5	113,5

Toggle clamps vertical with safety interlock

with straight foot and adjustable clamping spindle, stainless steel

Material:
Stainless steel.
Grip polyamide.
Unlocking bracket TPE.

Version:
Bright.

Sample order:
nlm 05912-106102

Note:
Maintenance-free high quality link bushings. Sustainable constant force during opening and closing. Optimum stability through the conical, U-profile clamping arm. Including internal bar lock with automatic safety catch.

Accessories:
05280 Protective caps
07111 Ball-end thrust screws, stainless steel
07119 Thrust screws, stainless steel
07120 Grub screws with thrust point DIN 6332
07140 Thrust pads DIN 6311

Drawing reference:
1) stop pin position 1
2) stop pin position 2

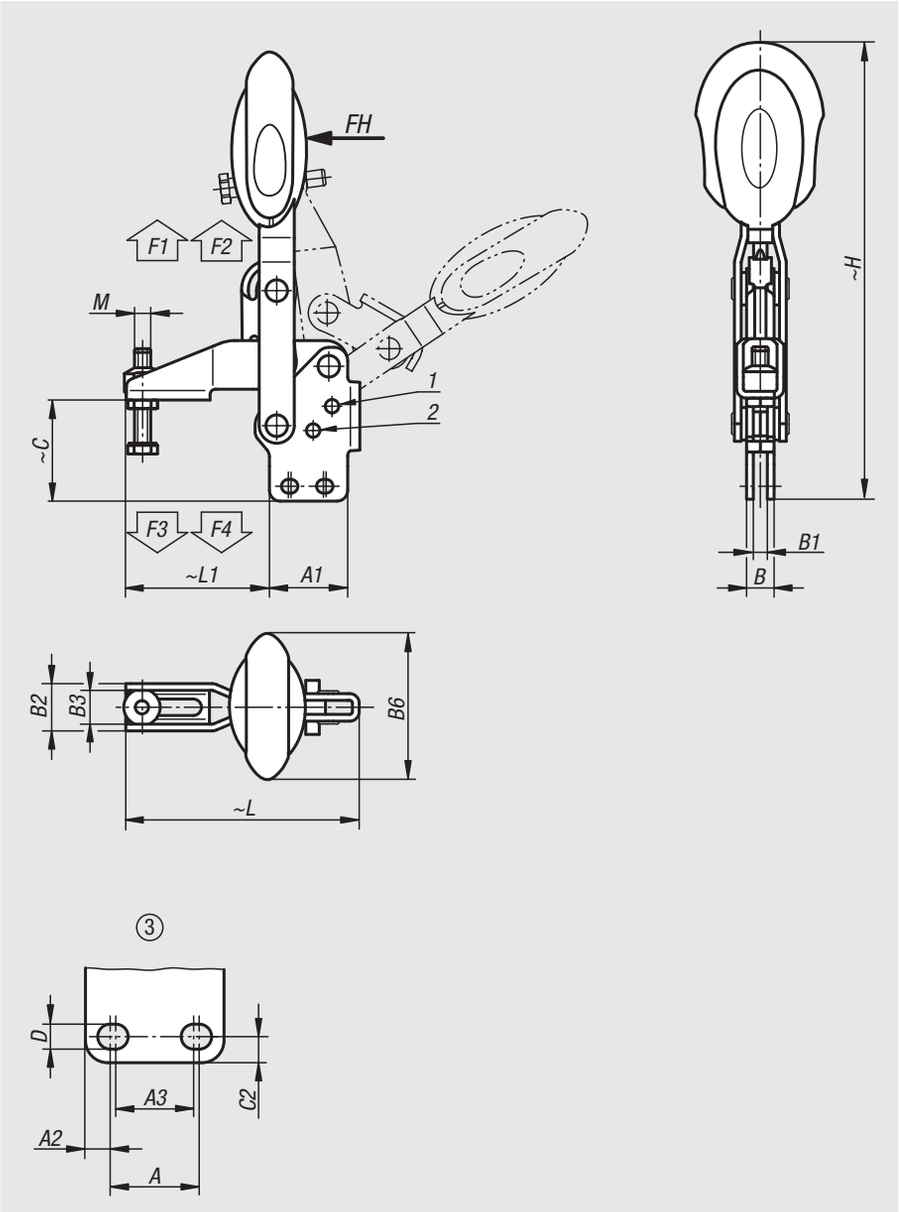

Order No.	Opening angle holding arm position 1	Opening angle holding arm position 2	Opening angle holding arm stop pin removed	Opening angle handle position 1	Opening angle handle position 2	Hand force FH N	Retaining force F1 N	Retaining force F2 N	Clamping force F3 N	Clamping force F4 N
05912-106102	56°	83°	141°	46°	56°	160	1350	1650	920	1050
05912-108102	13°	93°	158°	26°	61°	190	2000	2800	940	1350

Order No.	hole arrangement	M	A	A1	A2	A3	B	B1	B2	B3	B6	C	C2	D	H	L	L1
05912-106102	3	M6x35	14	29	7	12	10,2	5,2	17,5	12,5	53,4	37,6	5,5	5,5	175,7	86,5	53
05912-108102	3	M8x45	21	39	9	19	10,2	5,2	20,6	15,6	51,1	49	6,5	6,8	207,6	107	62

Spherical seating nuts

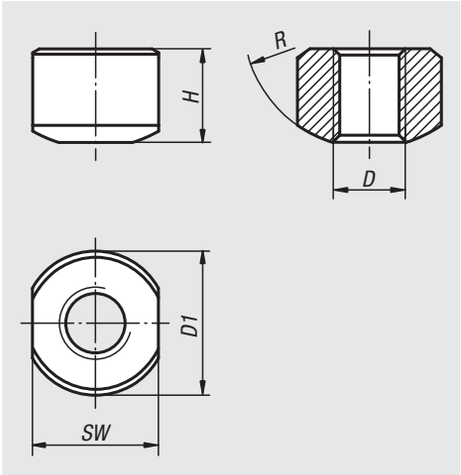

Material:
Steel or stainless steel

Version:
Steel black oxidised.
Stainless steel bright.

Sample order:
nlm 05990-04

Drawing reference:
1) Weldable

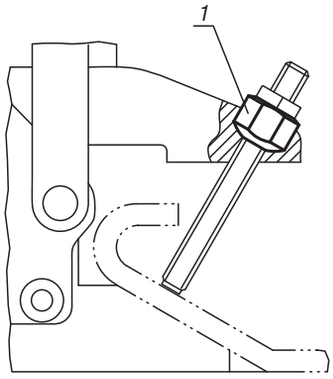

Order No. steel	Order No. stainless steel	D	H	D1	SW	R
05990-04	**05990-104**	M4	5,2	8	7	7
05990-05	**05990-105**	M5	6,7	10	9	9
05990-06	**05990-106**	M6	9,5	13,5	12,2	10
05990-08	**05990-108**	M8	12,8	18	15,3	12
05990-10	**-**	M10	12,1	20	18,2	14
05990-12	**-**	M12	14,8	23	20	16

06000

Operating parts

Knurled nuts

steel and stainless steel, DIN 6303

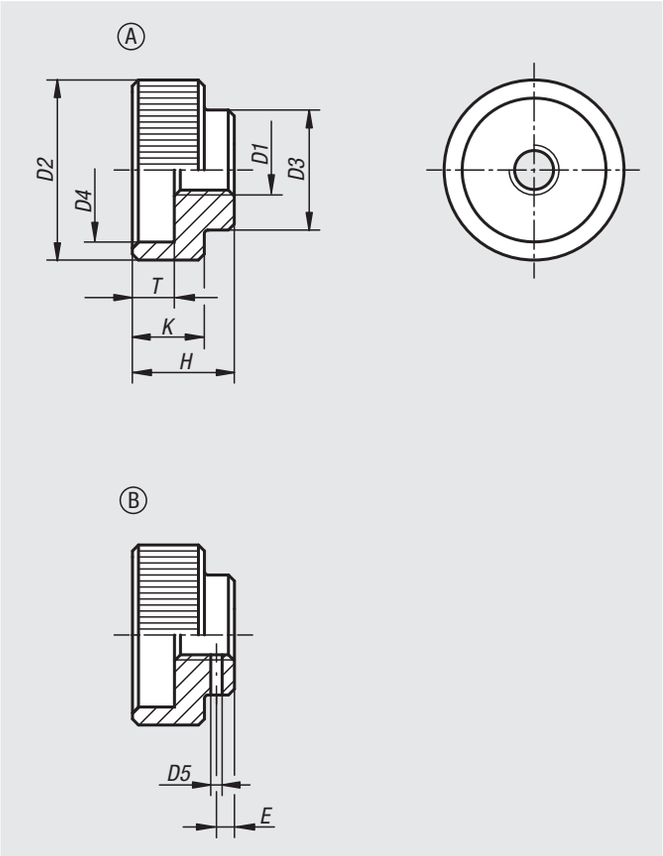

Material:
Free-cutting steel 1.0718.
Stainless steel 1.4305.

Version:
Free-cutting steel, black oxidised.
Stainless steel bright.

Sample order:
nlm 06010-108

Drawing reference:
Form A: without pin hole
Form B: with pin hole
- Drill through and ream pin hole during assembly.

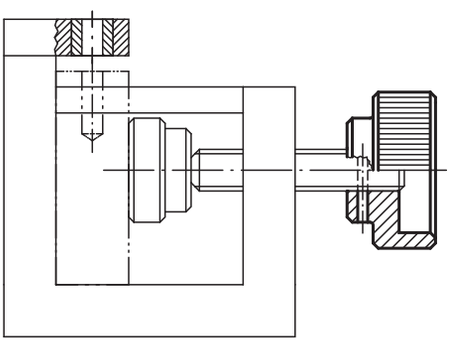

Order No.	Form	Main material	D1	D2	D3	D4	D5 predrilled	E	H	K	T	suitable dowel pin ISO 2338
06010-105	A	steel	M5	20	14	15	-	-	12	8	5	-
06010-106	A	steel	M6	24	16	18	-	-	14	10	6	-
06010-108	A	steel	M8	30	20	24	-	-	17	12	7	-
06010-110	A	steel	M10	36	28	30	-	-	20	14	8	-
06010-112	A	steel	M12	40	32	34	-	-	24	16	10	-
06010-1052	A	stainless steel	M5	20	14	15	-	-	12	8	5	-
06010-1062	A	stainless steel	M6	24	16	18	-	-	14	10	6	-
06010-1082	A	stainless steel	M8	30	20	24	-	-	17	12	7	-
06010-1102	A	stainless steel	M10	36	28	30	-	-	20	14	8	-
06010-1122	A	stainless steel	M12	40	32	34	-	-	24	16	10	-
06010-205	B	steel	M5	20	14	15	1,4	2,5	12	8	5	1,5 M6X14
06010-206	B	steel	M6	24	16	18	1,4	2,5	14	10	6	1,5 M6X16
06010-208	B	steel	M8	30	20	24	1,9	3	17	12	7	2 M6X20
06010-210	B	steel	M10	36	28	30	2,9	4	20	14	8	3 M6X28
06010-212	B	steel	M12	40	32	34	3,9	4	24	16	10	4 M6X32

Knurled nuts

plastic

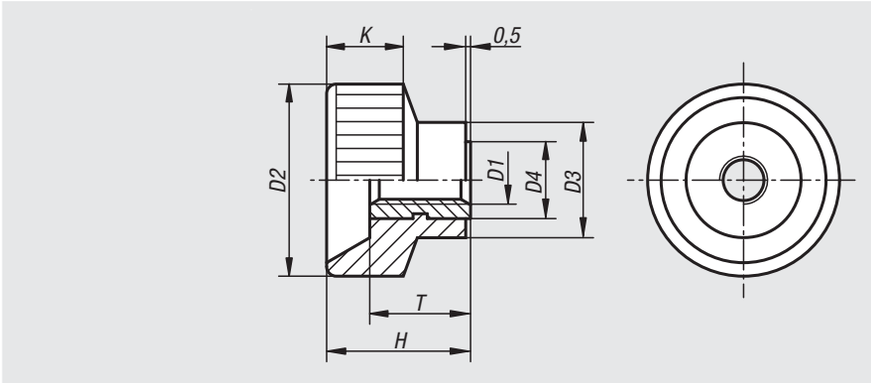

Material:
Black Duroplast PF 31.
Tapped bush brass.

Version:
Tapped bush nickel-plated.

Sample order:
nlm 06013-08

Order No.	D1	D2	D3	D4	H	K	T
06013-04	M4	18	10	7	13	8	9
06013-05	M5	20	12	8	14	8	10
06013-06	M6	24	13	9	16	9	10
06013-08	M8	30	15	11	18	11	11
06013-10	M10	35	18	14	19	12	11

Knurled nuts quick-acting

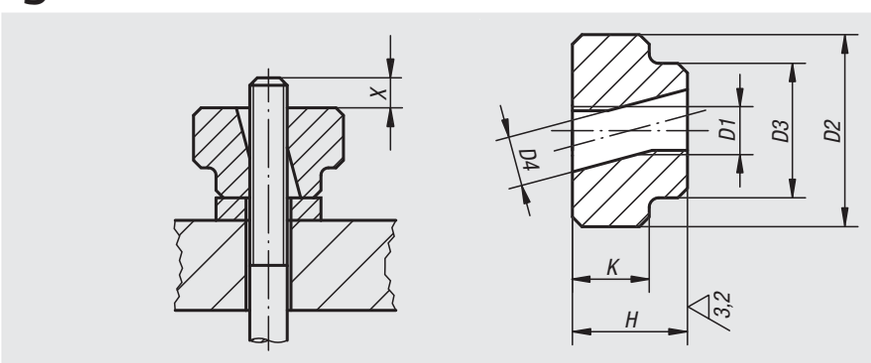

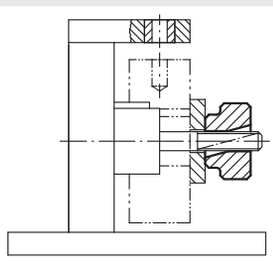

Material:
Carbon steel.

Version:
Tempered and black oxidised.

Sample order:
nlm 06030-08

Note:
Quick-acting knurled nuts are mainly used in applications where no high clamping pressures are required.
Tilt the nut to slide on, then straighten it to engage the threads.

Drawing reference:
X: The stud should be several mm longer than height “H”

Order No.	D1	D2	D3	D4	H	K
06030-05	M5	20	14	5,2	12	8
06030-06	M6	24	16	6,2	14	10
06030-08	M8	30	20	8,2	17	12
06030-10	M10	36	28	10,3	20	14
06030-12	M12	40	32	12,3	24	16

06070

Knurled nuts

Material:
Steel.

Version:
Black oxidised.

Sample order:
nlm 06070-100

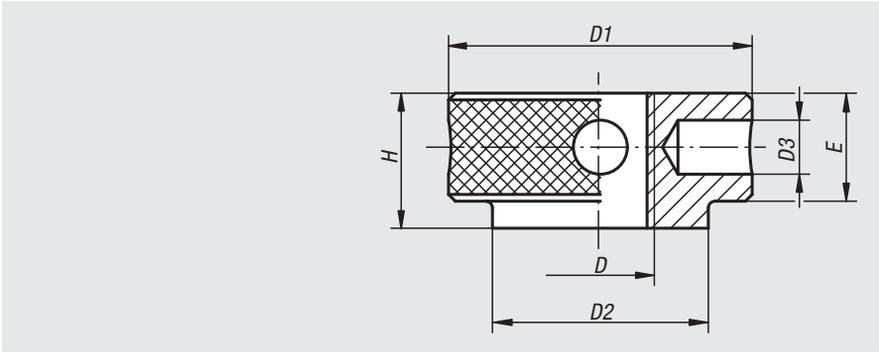

Order No.	D	D1	D2	D3	E	H
06070-100	M10	32	22	4	10	12
06070-120	M12	36	25	5	13,5	16
06070-140	M14	40	28	6	15	18
06070-160	M16	45	32	8	16	20

06089

Knurled screws low head

steel and stainless steel, DIN 653

Material:
Steel or stainless steel (A 1).

Version:
Steel grade 5.8, bright;
Stainless steel, bright.

Sample order:
nlm 06089-062X20 (include length L)

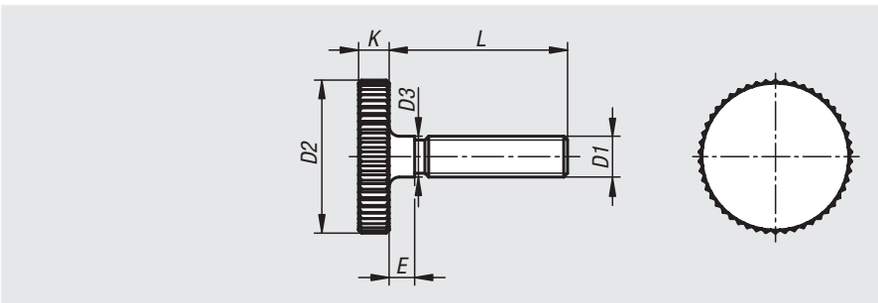

Order No.	Main material	D1	D2	D3	E	K	L
06089-03X	steel	M3	12	3	2	2,5	10/12/16
06089-04X	steel	M4	16	4	3	3,5	8/10/12/16/20
06089-05X	steel	M5	20	5	3	4	10/12/16/20/25/30
06089-06X	steel	M6	24	6	4	5	12/16/20/25/30/35/40
06089-08X	steel	M8	30	8	5	6	16/20/25/30/35/40
06089-10X	steel	M10	36	10	6	8	20/25/30/35/40
06089-032X	stainless steel	M3	12	3	2	2,5	10/12/16
06089-042X	stainless steel	M4	16	4	3	3,5	8/10/12/16/20
06089-052X	stainless steel	M5	20	5	3	4	10/12/16/20/25/30
06089-062X	stainless steel	M6	24	6	4	5	12/16/20/25/30/35/40
06089-082X	stainless steel	M8	30	8	5	6	16/20/25/30
06089-102X	stainless steel	M10	36	10	6	8	20/25/30/40

Knurled screws high form

steel and stainless steel, DIN 464

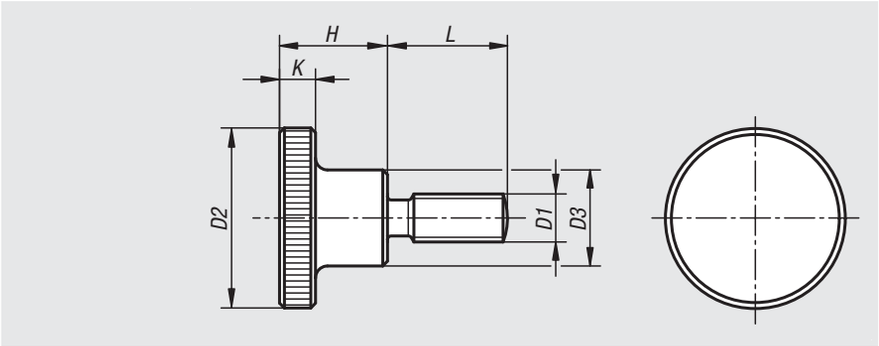

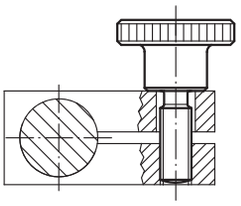

Material:
Free-cutting steel 1.0718.
Stainless steel 1.4305.

Version:
Free-cutting steel, black oxidised.
Stainless steel bright.

Sample order:
nlm 06090-06X20 (include length L)

Note:
* By these lengths the thread has no undercut at the shoulder.

Order No. stainless steel	Order No. steel	D1	D2	D3	L	H	K
06090-042X	**06090-04X**	M4	16	8	10/16/20	9,5	3,5
06090-052X	**06090-05X**	M5	20	10	10/16/20	11,5	4
06090-062X	**06090-06X**	M6	24	12	10/16/20/25	15	5
06090-082X	**06090-08X**	M8	30	16	16/20/25/30	18	6
06090-102X	**06090-10X**	M10	36	20	20/25/30/40	23	8

Knurled thumb screws

plastic

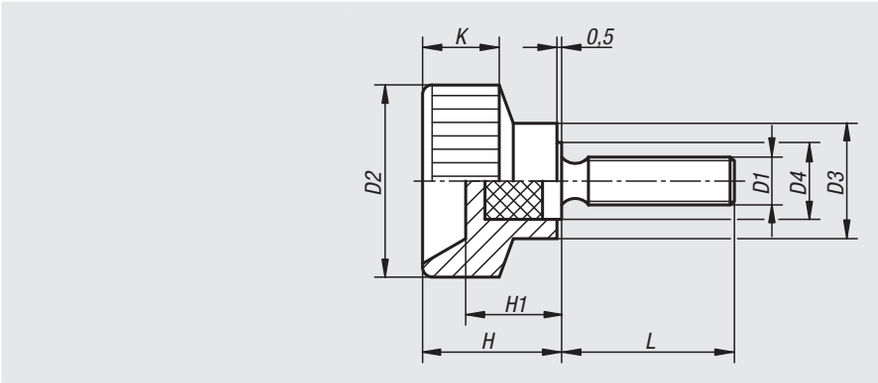

Material:
Black Duroplast PF 31.
Screw steel.

Version:
Screw galvanized.

Sample order:
nlm 06091-05X25 (include length L)

Order No.	L	D1	D2	D3	D4	H	H1	K
06091-04X	15/20	M4	18	10	7	13,5	9	8
06091-05X	10/18/25	M5	20	12	8	14,5	10	8
06091-06X	20/28	M6	24	13	10	15	9,5	9
06091-08X	25/32	M8	30	15	12	18	11	11
06091-10X	30	M10	35	18	14	18,5	11	12

Knurled knobs

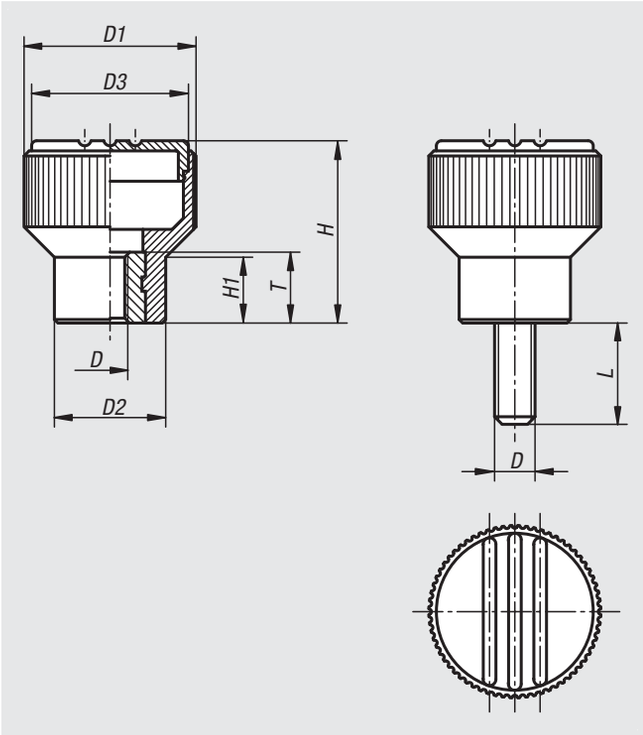

Material:
Thermoplastic, black grey.
Bush and threaded pin steel 5.8 or stainless steel 1.4305.

Version:
Steel blue passivated.
Stainless steel, bright.

Sample order:
nlm 06092-01056X20
(Cap colour traffic red. Include length L)

Note:
Δ Add the desired cap colour code here. No colour code is required for black grey caps.

black grey	light grey Δ = 5	traffic red Δ = 6	bright yellow Δ = 7
RAL 7021	RAL 7035	RAL 3020	RAL 1021

Knurled knobs with internal thread

Order No. steel	Order No. stainless steel	Size	D	D1	D2	D3	H	H1	T
06092-104Δ	**06092-0104Δ**	1	M4	21	14	19	22	8	10
06092-105Δ	**06092-0105Δ**	1	M5	21	14	19	22	8	10
06092-106Δ	**06092-0106Δ**	1	M6	21	14	19	22	8	10
06092-208Δ	**06092-0208Δ**	2	M8	26	18	23	26	9,5	14
06092-308Δ	**06092-0308Δ**	3	M8	34	22	31	36	13	14
06092-310Δ	**06092-0310Δ**	3	M10	34	22	31	36	13	14

Knurled knobs with external thread

Order No. steel	Order No. stainless steel	Size	D	D1	D2	D3	H	H1	L
06092-105ΔX	**06092-0105ΔX**	1	M5	21	14	19	22	8	10/12/15/20/25
06092-106ΔX	**06092-0106ΔX**	1	M6	21	14	19	22	8	15/20/25/30
06092-208ΔX	**06092-0208ΔX**	2	M8	26	18	23	26	9,5	20/25/30/40
06092-310ΔX	**06092-0310ΔX**	3	M10	34	22	31	36	13	20/30/40

Knurled knobs antistatic

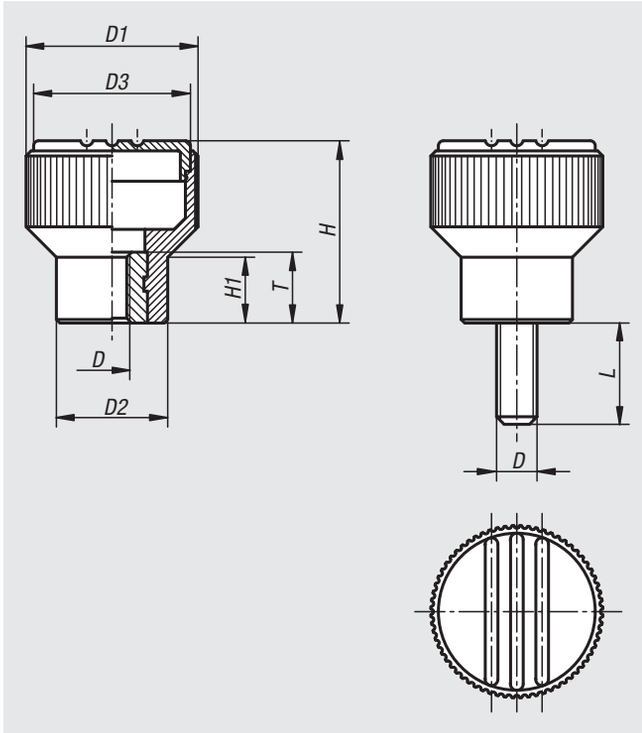

Material:
Thermoplastic, graphite black.
Bush or screw steel 5.8.

Version:
Screw blue passivated.

Sample order:
nlm 06092-1110624

Application:
Sensitive electrical or electronic equipment, components and devices (ESD sensitive elements) may be damaged or destroyed by electrostatic discharges (ESD) in the immediate vicinity.
Electrostatic discharges can come from people or through handling ESD sensitive components (e.g. during production, assembly, transport, storage etc).
Electrically conductive products which conform to DIN EN 61340-5-1 are essential within electronic environments to prevent an electrostatic discharge.
These products can be used for ESD applications or in ESD protection areas (EPA) in accordance with DIN EN 61340-5-1.
The yellow ESD logo is printed on the side of the product to clearly identify it.

Safety:
These ESD products can also be used for devices, components and protection systems in areas with high risk of explosion.
Use of these ESD products prevents the occurrence of electrostatic spark discharges, eliminating the potential ignition of gases and dusts which could lead to explosions in enclosed spaces.
Manufacturers and operators must use and conform to ATEX directives for the protection of persons working in areas with high risk of explosion.
These ESD products are certified by TÜV-Süd in relation to their electrical discharge capability.

Target groups:
Device manufacturers required to conform to ATEX product directive 2014/34/EU.
Operators required to conform to ATEX worker protection directive 1999/92/EC.

Knurled knobs antistatic with internal thread

Order No.	Size	D	D1	D2	D3	H	H1	T
06092-1110624	1	M6	21	14	19	22	8	10

Knurled knobs antistatic with external thread

Order No.	Size	D	D1	D2	D3	H	H1	L
06092-1110624X15	1	M6	21	14	19	22	8	15

Knurled knobs

Material:
Grip black grey thermoplastic.
Bush brass or stainless steel 1.4305.
Screw steel 5.8 or stainless steel 1.4305.

Version:
Steel blue passivated.
Stainless steel, bright.

Sample order:
nlm 06094-005X12

On request:
Other colours.

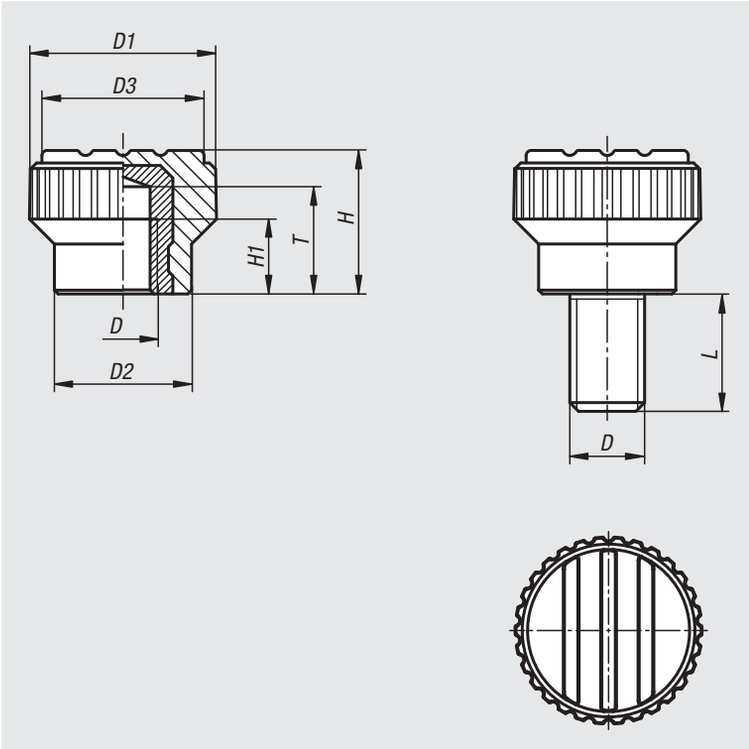

Knurled knobs with internal thread

Order No.	Version	D	D1	D2	D3	H	H1	T
06094-003	bush brass	M3	15	11	13	11,5	4,5	8,6
06094-004	bush brass	M4	15	11	13	11,5	6	8,6
06094-005	bush brass	M5	15	11	13	11,5	6	8,6
06094-0003	bush stainless steel	M3	15	11	13	11,5	4,5	8,6
06094-0004	bush stainless steel	M4	15	11	13	11,5	6	8,6
06094-0005	bush stainless steel	M5	15	11	13	11,5	6	8,6

Knurled knobs with external thread

Order No.	Version	D	D1	D2	D3	H	L
06094-003X	pin steel	M3	15	11	13	11,5	8/10/12/15
06094-004X	pin steel	M4	15	11	13	11,5	8/10/12/15
06094-005X	pin steel	M5	15	11	13	11,5	10/12/15/20
06094-006X	pin steel	M6	15	11	13	11,5	10/15/20/25
06094-0003X	pin stainless steel	M3	15	11	13	11,5	8/10/12/15
06094-0004X	pin stainless steel	M4	15	11	13	11,5	8/10/12/15
06094-0005X	pin stainless steel	M5	15	11	13	11,5	10/12/15/20
06094-0006X	pin stainless steel	M6	15	11	13	11,5	10/15/20/25

Knurled knobs

aluminium

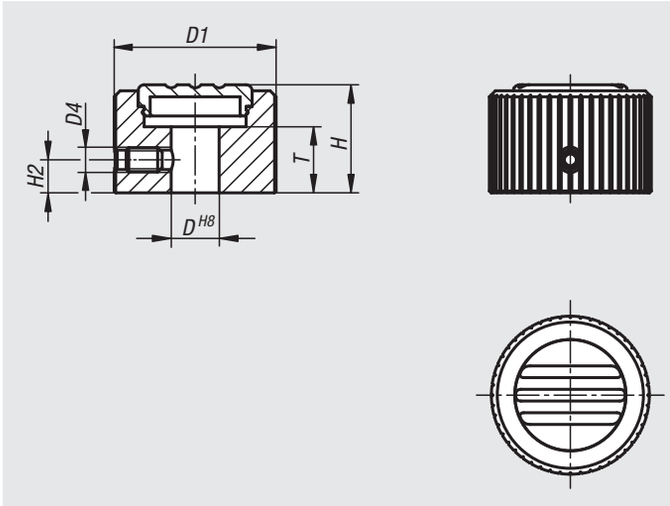

Material:
Body aluminium.
Cap thermoplastic PA6.
Grub screw stainless steel.

Version:
Body black anodized.
Cap light grey RAL 7035.
Grub screw bright.

Sample order:
nlm 06096-27085

On request:
Other internal threads, colours and special versions.

Order No.	D	D1	D4	H	H2	T
06096-27085	8	27	M4	18	5,5	11
06096-27105	10	27	M4	18	5,5	11
06096-34105	10	34	M5	21	7	11
06096-34125	12	34	M5	21	7	11
06096-42125	12	42	M5	24,5	8,5	15
06096-42145	14	42	M5	24,5	8,5	15

Knurled knobs

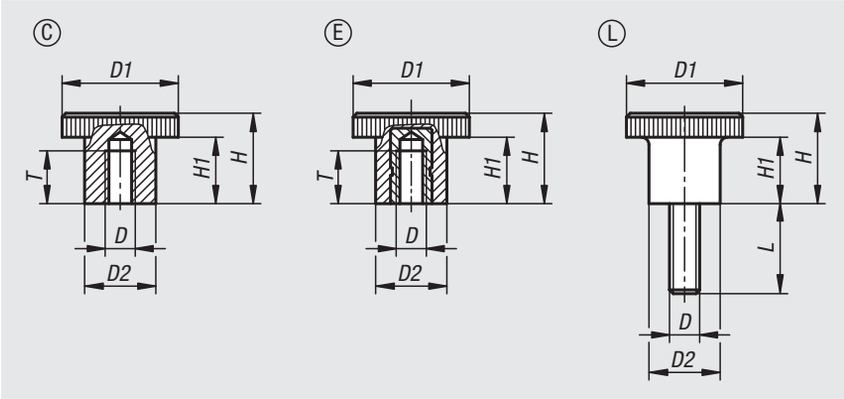

Material:
Duroplast PF 31, black.
Screw, steel.
Tapped bush, steel or brass.

Version:
Screw, galvanized.
Tapped bush, galvanized or bright brass.

Sample order:
nlm 06097-302205X10

Drawing reference:
Form C: tapped blind hole
Form E: tapped bush
Form L: external thread

Knurled knobs with internal thread

Order No.	Form	Component material	D	D1	D2	H	H1	T
06097-102206	C	plastic	M6	22	12	13	6	7,5
06097-102606	C	plastic	M6	26	17	20	14	9
06097-212205	E	brass	M5	22	12	13	6	6
06097-202606	E	steel	M6	26	17	20	14	10
06097-202608	E	steel	M8	26	17	20	14	12

Knurled knobs with external thread

Order No.	Form	Component material	D	D1	D2	H	H1	L
06097-302205X	L	steel	M5	22	12	13	6	10/15/20
06097-302206X	L	steel	M6	22	12	13	6	10/15/20/30
06097-302606X	L	steel	M6	26	15	13	6	10/15/20/30
06097-302608X	L	steel	M8	26	15	13	6	15/20/30

Knurled knobs

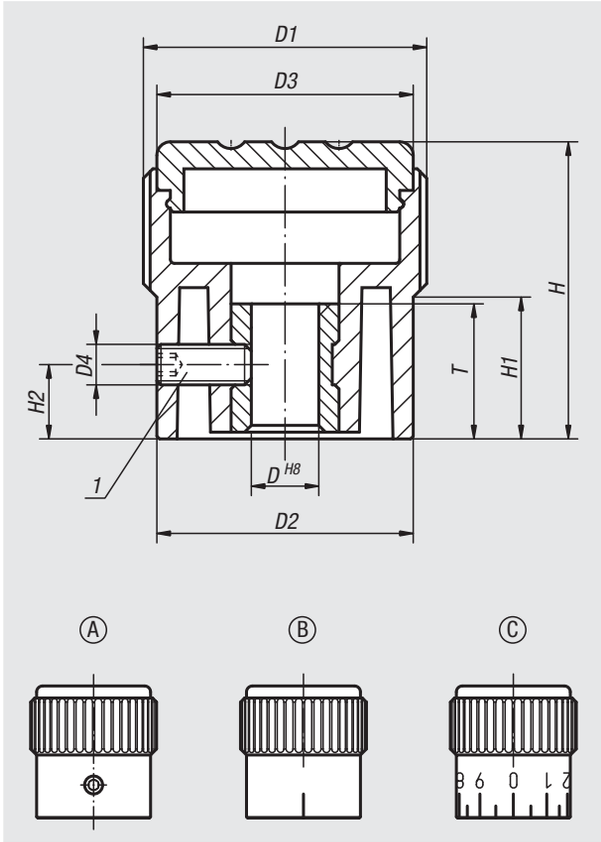

Material:
Thermoplastic, black grey.
Bush steel.

Version:
Steel blue passivated.

Sample order:
nlm 06100-11055 (cap colour light grey)

Note:
Available without graduations, with one scale line or with 20 graduations and 10 digits.
Δ Add the desired cap colour here; no colour code is required for black grey caps.

On request:
Special graduations.

Drawing reference:
Form A: without graduations
Form B: with one scale line
Form C: with standard graduations

1) Set screw for locking (by Form C between numbers 5 and 6)

black grey	light grey Δ = 5	traffic red Δ = 6	bright yellow Δ = 7
RAL 7021	RAL 7035	RAL 3020	RAL 1021

Order No.	Form	Size	D	D1	D2	D3	D4	H	H1	H2	T
06100-1105Δ	A	1	5	21	19	19	M3	22	10,5	5	10
06100-1206Δ	A	2	6	26	23	23	M3	26	12	6	10
06100-1308Δ	A	3	8	34	31	31	M4	36	17,5	7	14
06100-2105Δ	B	1	5	21	19	19	M3	22	10,5	5	10
06100-2206Δ	B	2	6	26	23	23	M3	26	12	6	10
06100-2308Δ	B	3	8	34	31	31	M4	36	17,5	7	14
06100-3105Δ	C	1	5	21	19	19	M3	22	10,5	5	10
06100-3206Δ	C	2	6	26	23	23	M3	26	12	6	10
06100-3308Δ	C	3	8	34	31	31	M4	36	17,5	7	14

Knurled knobs

with arrow

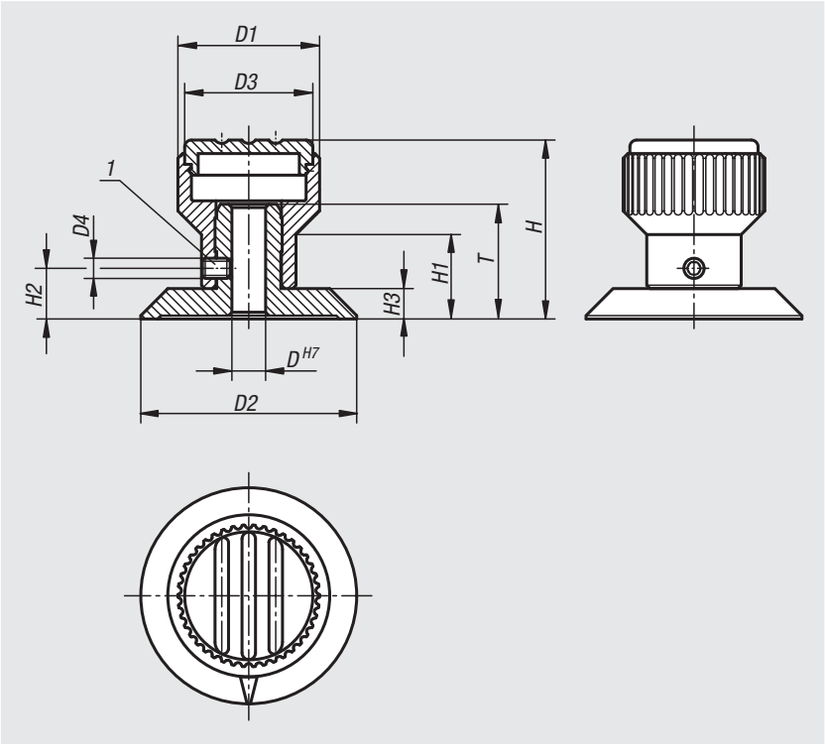

Material:
Knurled knob thermoplastic.
Washer aluminium.

Version:
Aluminium black anodized.

Sample order:
nlm 06105-1055 (cap colour light grey)

Note:
The arrow is engraved after anodizing. The set screw secures both the hub and the pressed-in washer. The H7 hole in the hub ensures a good tight fit on the shaft.

Δ Add the desired cap colour here. No colour code is required for black grey caps.

Drawing reference:
1) set screw

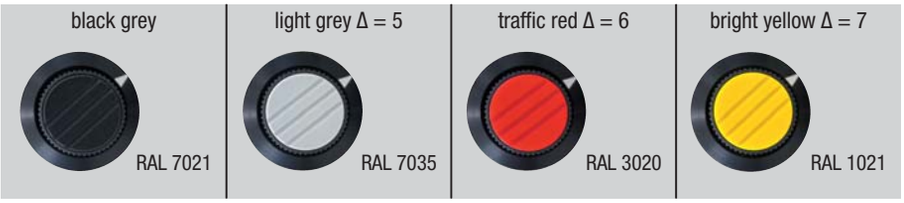

Order No.	Size	D	D1	D2	D3	D4	H	H1	H2	H3	T
06105-105Δ	1	5	21	32	19	M3	26,5	12,5	7,5	4,5	17
06105-206Δ	2	6	26	40	23	M4	31,5	15	9,5	5,5	20,5
06105-308Δ	3	8	34	52	31	M4	43	20	12	7	22

Knurled nuts high

steel and stainless steel, DIN 466

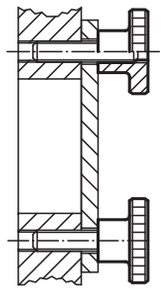

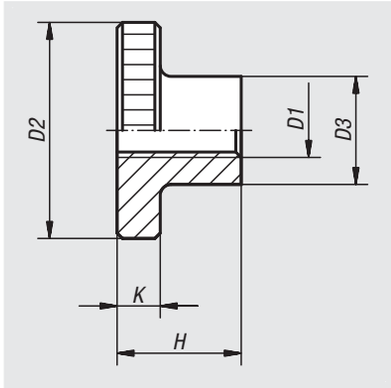

Material:
Free-cutting steel 1.0718.
Stainless steel 1.4305.

Version:
Steel black oxidised.
Stainless steel bright.

Sample order:
nlm 06110-04

Note:
M12 high knurled nuts are not included in the official standards sheet.

Order No. stainless steel	Order No. steel	D1	D2	D3	H	K
06110-042	**06110-04**	M4	16	8	9,5	3,5
06110-052	**06110-05**	M5	20	10	11,5	4
06110-062	**06110-06**	M6	24	12	15	5
06110-082	**06110-08**	M8	30	16	18	6
06110-102	**06110-10**	M10	36	20	23	8
06110-122	**06110-12**	M12	36	20	23	8

Knurled nuts flat

steel and stainless steel, DIN 467

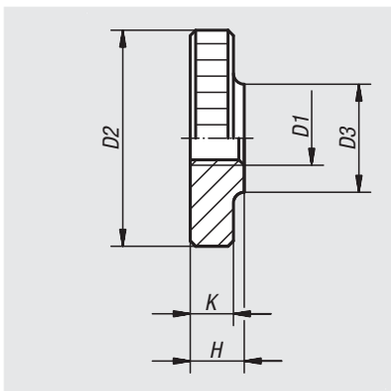

Material:
Free-cutting steel 1.0718.
Stainless steel 1.4305.

Version:
Steel black oxidised.
Stainless steel bright.

Sample order:
nlm 06120-042

Note:
M12 flat knurled nuts are not included in the official standards sheet.

Order No. stainless steel	Order No. steel	D1	D2	D3	H	K
06120-042	**06120-04**	M4	16	8	4	3,5
06120-052	**06120-05**	M5	20	10	5	4
06120-062	**06120-06**	M6	24	12	6	5
06120-082	**06120-08**	M8	30	16	8	6
06120-102	**06120-10**	M10	36	20	10	8
06120-122	**06120-12**	M12	36	20	10	8

Knurled screws

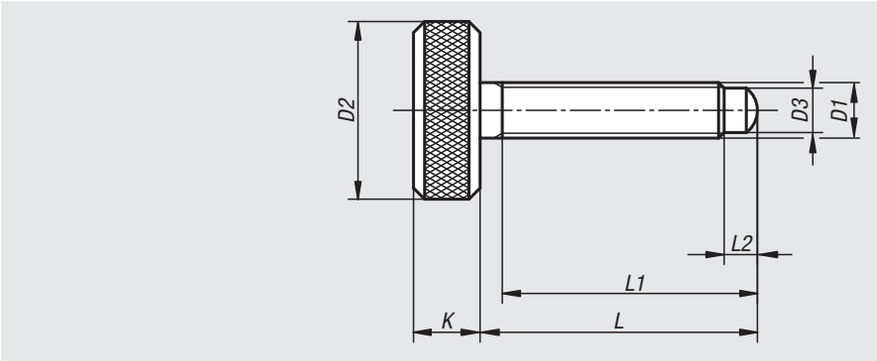

Material:
Carbon steel.

Version:
Tempered and black oxidised.

Sample order:
nlm 06130-061X50

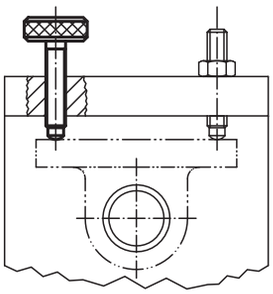

Order No.	D1	D2	D3	K	L	L1	L2
06130-05X25	M5	16	4	6	25	23	3
06130-051X40	M5	16	4	6	40	38	3
06130-06X35	M6	18	4,5	7	35	33	3,5
06130-061X50	M6	18	4,5	7	50	48	3,5
06130-062X70	M6	18	4,5	7	70	68	3,5
06130-08X45	M8	20	6	8	45	42	5
06130-081X60	M8	20	6	8	60	57	5
06130-10X45	M10	25	7,5	10	45	42	5,5
06130-101X60	M10	25	7,5	10	60	57	5,5

Notes

Knurled knobs

for screws with hex head

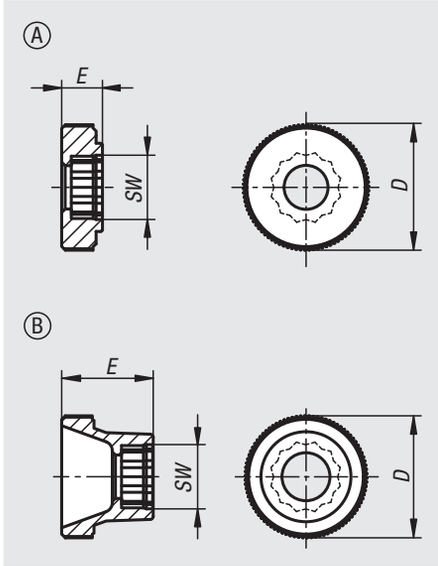

Material:
Thermoplastic.

Version:
Black or orange.

Sample order:
nlm 06131-00040 (knurled knob colour black)
Colour code:
0=black
1=orange

Note:
Suitable screws ISO 4014.

Δ add the desired colour code here

Order No.	Form	for screws	D	E	SW
06131-0Δ040	A	M4	17	5,5	7
06131-0Δ050	A	M5	20	6,5	8
06131-0Δ060	A	M6	25	8	10
06131-0Δ080	A	M8	36	10	13
06131-0Δ100	A	M10	36	10	17
06131-1Δ040	B	M4	17	11,5	7
06131-1Δ050	B	M5	20	15	8
06131-1Δ060	B	M6	25	18	10
06131-1Δ080	B	M8	36	23	13
06131-1Δ100	B	M10	36	23	17

Knurled heads

for hexagon socket screws

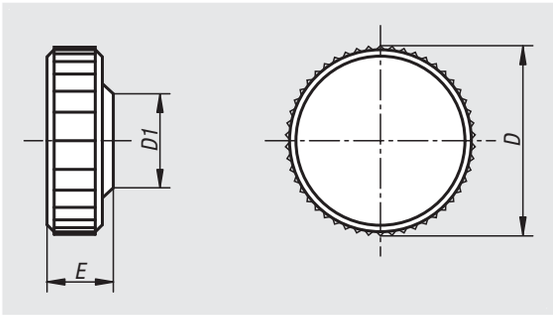

Material:
Thermoplastic.

Version:
Black, grey or red.

Sample order:
nlm 06132-0506 (knurled head colour red)
Colour Code:
5 = grey
6 = red

Note:
Suitable screws ISO 4762.

Δ Add the desired colour code here.
No colour code is required for black.

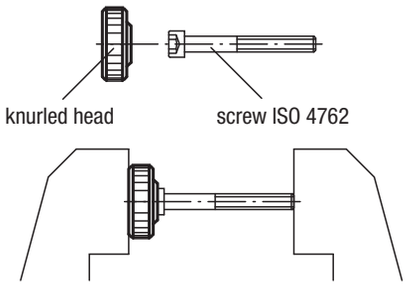

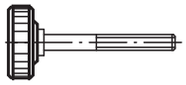

knurled head with male thread

Order No.	D	D1	E	for cap screw
06132-030Δ	9,5	8,3	4,5	M3
06132-040Δ	13	9,6	5	M4
06132-050Δ	16	11,5	6,5	M5
06132-060Δ	19	14	7,5	M6
06132-061Δ	26	13	8	M6
06132-080Δ	26	16	10	M8

Wing grips

for hexagon socket screws

Material:
Thermoplastic.

Version:
Black, grey or red.

Sample order:
nlm 06133-0506 (wing grip colour red)
Colour code:
5 = grey
6 = red

Note:
Suitable screws ISO 4762.

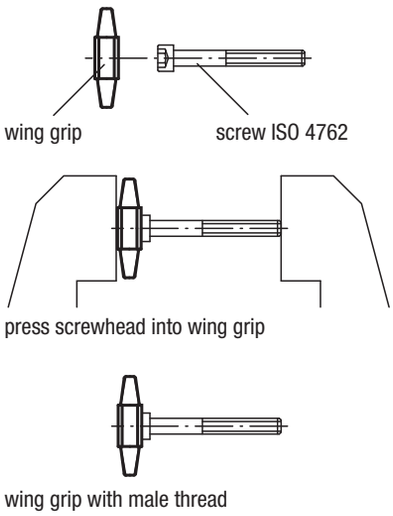

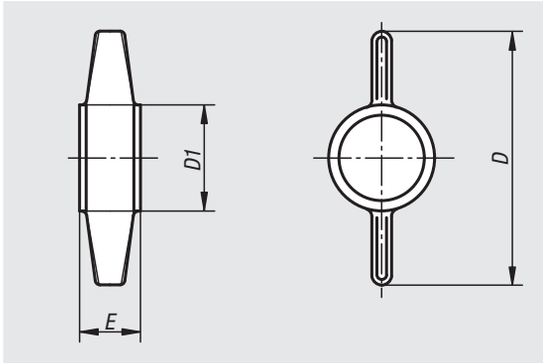

Order No.	D	D1	E	for cap screw
06133-050Δ	26	12	7	M5
06133-060Δ	30	13,5	8	M6
06133-080Δ	38	17	10	M8
06133-100Δ	45	20	12,5	M10

Disc grips

for hexagon socket screws

Material:
Thermoplastic.

Version:
Black or grey

Sample order:
nlm 06134-0805 (disc grip colour grey)
Colour Code:
5 = grey

Note:
Suitable screws see ISO 4762.

Δ Add the desired grip colour here. No colour code is required for black grips

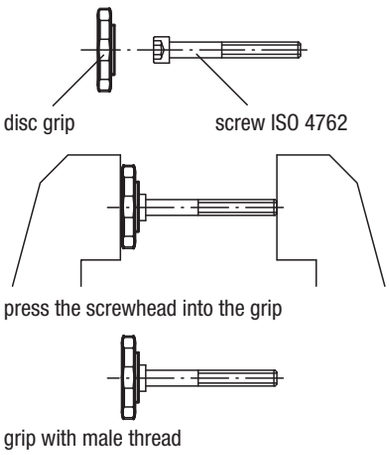

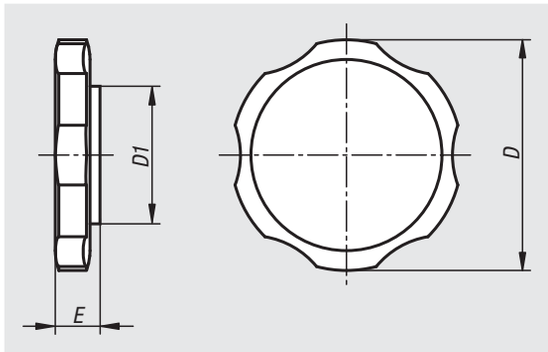

Order No.	D	D1	E	for cap screw
06134-060Δ	38	14	13	M6
06134-080Δ	38	17	11,5	M8
06134-100Δ	38	20	13	M10

Tommy bars

with fixed or sliding T-bar, DIN 6305 or DIN 6307

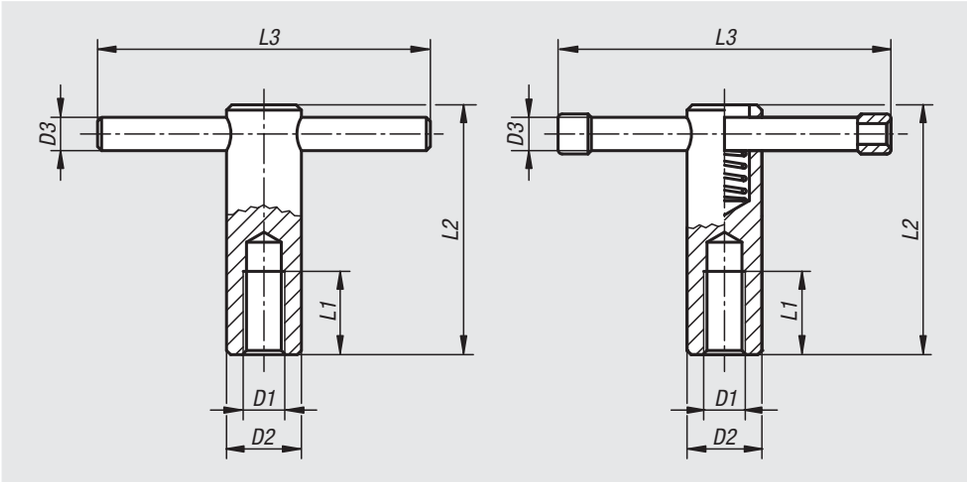

Material:
Steel.

Version:
Black oxidised.

Sample order:
nlm 06140-210

Note:
By the version with sliding T-bar the bar is held in any desired position by a spring in the body. End stops prevent the bar falling out.
By the version with fixed T-bar the bar is pressed in.

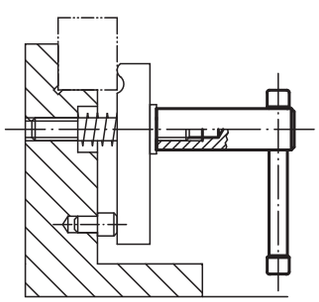

Order No.	Version	D1	D2	D3	L1	L2	L3
06140-110	fixed T-bar	M10	18	8	20	60	80
06140-112	fixed T-bar	M12	20	10	25	70	100
06140-116	fixed T-bar	M16	24	12	35	85	120
06140-120	fixed T-bar	M20	30	16	40	95	140
06140-210	sliding T-bar	M10	18	8	20	60	80
06140-212	sliding T-bar	M12	20	10	25	70	100
06140-216	sliding T-bar	M16	24	13	35	85	120
06140-220	sliding T-bar	M20	30	16	40	95	140

T-thrust screws

with fixed or sliding T-bar, DIN 6304 or DIN 6306

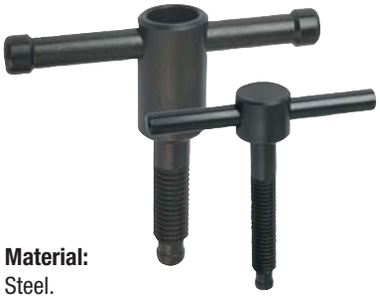

Material:
Steel.

Version:
Black oxidised. Thrust pin hardened.

Sample order:
nlm 06150-116X90

Note:
By the thrust screws with sliding T-bar the bar is held in any desired position by a spring in the body. End stops prevent the bar falling out. By the fixed handles the T-bar is pressed in.

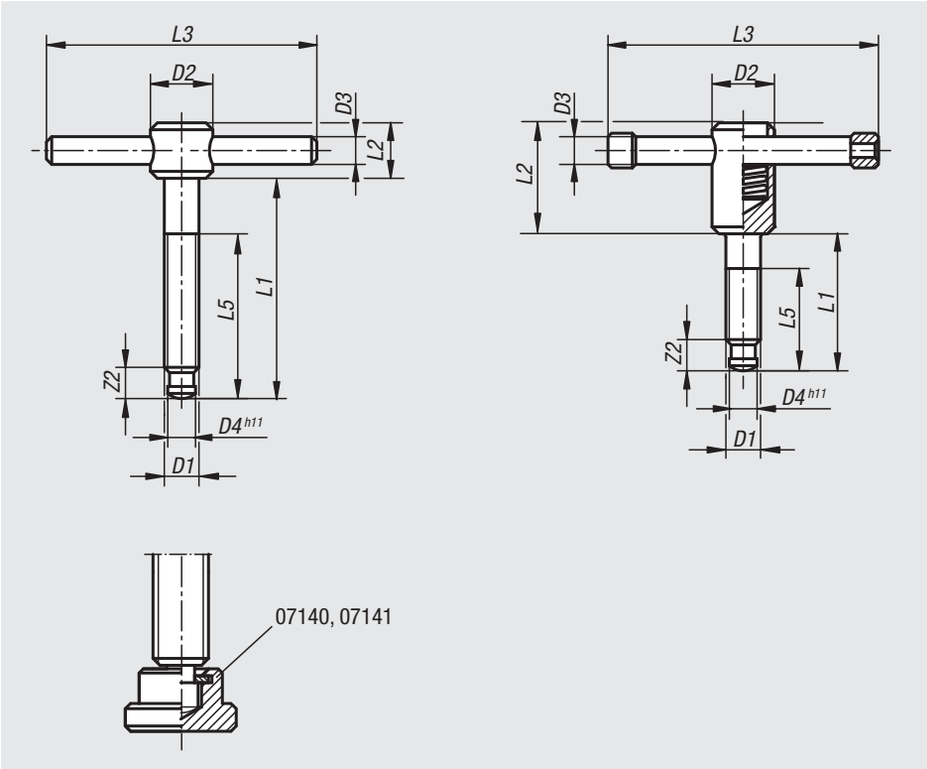

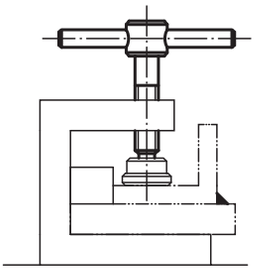

Order No.	Version	L1	D1	D2	D3	D4	L2	L3	L5	Z2
06150-106X40	fixed T-bar	40	M6	12	5	4,5	10	50	30	6
06150-106X50	fixed T-bar	50	M6	12	5	4,5	10	50	40	6
06150-108X50	fixed T-bar	50	M8	14	6	6	12	60	35	7,5
06150-108X60	fixed T-bar	60	M8	14	6	6	12	60	45	7,5
06150-110X60	fixed T-bar	60	M10	18	8	8	14	80	40	9
06150-110X70	fixed T-bar	70	M10	18	8	8	14	80	50	9
06150-112X70	fixed T-bar	70	M12	20	10	8	18	100	50	10
06150-112X80	fixed T-bar	80	M12	20	10	8	18	100	60	10
06150-116X75	fixed T-bar	75	M16	24	12	12	20	120	55	12
06150-116X90	fixed T-bar	90	M16	24	12	12	20	120	70	12
06150-116X110	fixed T-bar	110	M16	24	12	12	20	120	90	12
06150-120X75	fixed T-bar	75	M20	30	16	15,5	28	140	55	14
06150-120X90	fixed T-bar	90	M20	30	16	15,5	28	140	70	14
06150-120X110	fixed T-bar	110	M20	30	16	15,5	28	140	90	14
06150-210X40	sliding T-bar	40	M10	18	8	8	32	80	30	9
06150-210X50	sliding T-bar	50	M10	18	8	8	32	80	40	9
06150-212X50	sliding T-bar	50	M12	20	10	8	35	100	40	10
06150-212X60	sliding T-bar	60	M12	20	10	8	35	100	50	10
06150-216X55	sliding T-bar	55	M16	24	13	12	40	120	45	12
06150-216X70	sliding T-bar	70	M16	24	13	12	40	120	60	12
06150-216X90	sliding T-bar	90	M16	24	13	12	40	120	80	12
06150-220X55	sliding T-bar	55	M20	30	16	15,5	45	140	45	14
06150-220X70	sliding T-bar	70	M20	30	16	15,5	45	140	60	14
06150-220X90	sliding T-bar	90	M20	30	16	15,5	45	140	80	14

Palm grips

aluminium, similar to DIN 6335

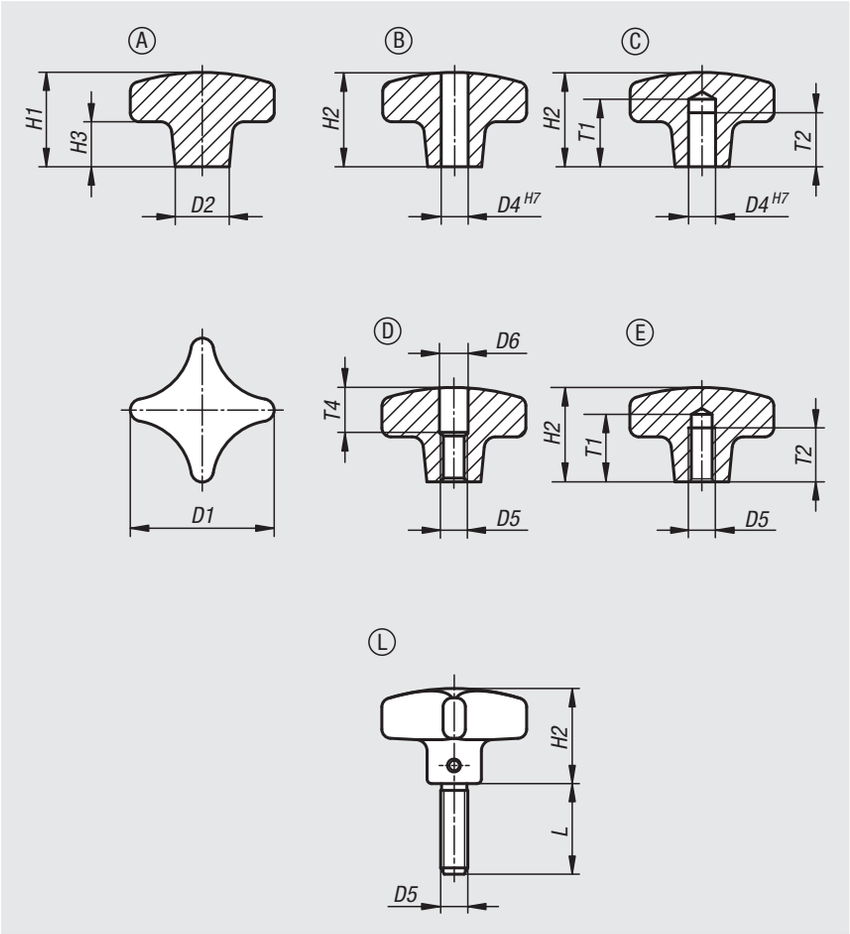

Material:
Aluminium.
Grub screw stainless steel 1.4305.
Pin stainless steel 1.4310.

Version:
Vibratory ground or ground and polished.
Grub screw and pin bright.

Sample order:
nlm 06156-104008

On request:
Blank palm grips (not tumbled).

Drawing reference:
Form A: blank
Form B: drilled through
Form C: blind hole
Form D: tapped and counterbored
Form E: tapped blind hole
Form L: external thread

Order No.	Version	Form	D1	D2	H1	H3
06156-104008	tumbled	A	40	14	26	14
06156-105010	tumbled	A	50	18	34	20
06156-106312	tumbled	A	63	25	42	25
06156-108016	tumbled	A	80	25	52	30

Palm grips

aluminium, similar to DIN 6335

Order No. tumbled	Order No. polished	Form	D1	D2	D4	H2
06156-204008	06156-2040082	B	40	14	8	25
06156-205010	06156-2050102	B	50	18	10	32
06156-206312	06156-2063122	B	63	25	12	40
06156-208016	06156-2080162	B	80	25	16	50

Order No. tumbled	Order No. polished	Form	D1	D2	D4	H2	T1	T2
06156-304008	06156-3040082	C	40	14	8	25	18	15
06156-305010	06156-3050102	C	50	18	10	32	21	18
06156-306312	06156-3063122	C	63	25	12	40	25	22
06156-308016	06156-3080162	C	80	25	16	50	32	28

Order No. tumbled	Order No. polished	Form	D1	D2	D5	D6	H2	T4
06156-404008	06156-4040082	D	40	14	M8	8,4	25	12
06156-405010	06156-4050102	D	50	18	M10	10,5	32	16
06156-406312	06156-4063122	D	63	25	M12	13	40	20
06156-408016	06156-4080162	D	80	25	M16	17	50	30

Order No. tumbled	Order No. polished	Form	D1	D2	D5	H2	T1	T2
06156-504008	06156-5040082	E	40	14	M8	25	18	15
06156-505010	06156-5050102	E	50	18	M10	32	21	18
06156-506312	06156-5063122	E	63	25	M12	40	25	22
06156-508016	06156-5080162	E	80	25	M16	50	32	28

Order No.	Version	Form	D1	D2	D5	H2	L
06156-604008X	tumbled	L	40	14	M8	25	20/25/30/40/50
06156-605010X	tumbled	L	50	18	M10	32	20/25/30/40/50
06156-606312X	tumbled	L	63	25	M12	40	20/30/40/50

Palm grips

stainless steel, similar to DIN 6335

Material:
Stainless steel 1.4308.
Grub screw stainless steel 1.4305.
Pin stainless steel 1.4310.

Version:
Ground and polished or blasted.
Grub screw and pin bright.

Sample order:
nlm 06158-2032062

Drawing reference:
Form B: drilled through
Form C: blind hole
Form D: tapped and counterbored
Form E: tapped blind hole
Form L: external thread

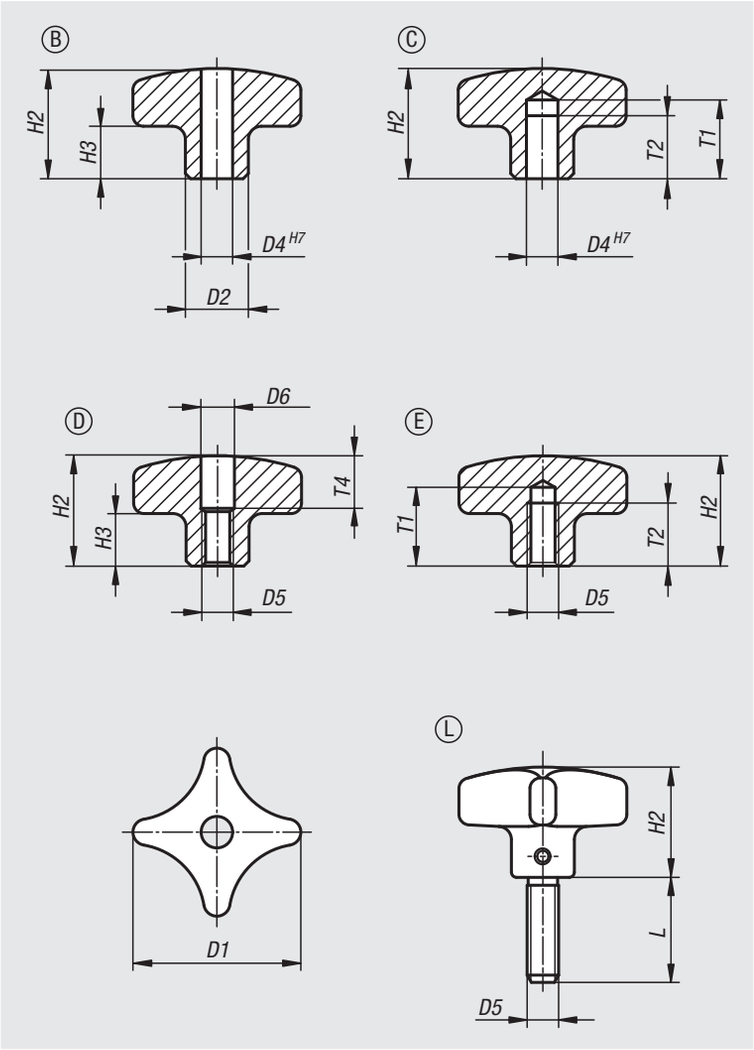

Palm grips

stainless steel, similar to DIN 6335

Order No. Form B	Order No. Form C	Version	D1	D2	D4	H2	H3	T1	T2
06158-2032062	**06158-3032062**	polished	32	12	6	21	10	-/15	-/12
06158-2040082	**06158-3040082**	polished	40	14	8	26	13	-/18	-/15
06158-2050102	**06158-3050102**	polished	50	18	10	34	17	-/21	-/18
06158-2063122	**06158-3063122**	polished	63	20	12	42	21	-/25	-/22
06158-2032063	**06158-3032063**	blasted	32	12	6	21	10	-/15	-/12
06158-2040083	**06158-3040083**	blasted	40	14	8	26	13	-/18	-/15
06158-2050103	**06158-3050103**	blasted	50	18	10	34	17	-/21	-/18
06158-2063123	**06158-3063123**	blasted	63	20	12	42	21	-/25	-/22

Order No. Form D	Order No. Form E	Version	D1	D2	D5	D6	H2	H3	T1	T2	T4
06158-4032062	**06158-5032062**	polished	32	12	M6	6,4/-	21	10	-/15	-/12	10/-
06158-4040082	**06158-5040082**	polished	40	14	M8	8,4/-	26	13	-/18	-/15	12/-
06158-4050102	**06158-5050102**	polished	50	18	M10	10,5/-	34	17	-/21	-/18	16/-
06158-4063122	**06158-5063122**	polished	63	20	M12	13/-	42	21	-/25	-/22	20/-
06158-4032063	**06158-5032063**	blasted	32	12	M6	6,4/-	21	10	-/15	-/12	10/-
06158-4040083	**06158-5040083**	blasted	40	14	M8	8,4/-	26	13	-/18	-/15	12/-
06158-4050103	**06158-5050103**	blasted	50	18	M10	10,5/-	34	17	-/21	-/18	16/-
06158-4063123	**06158-5063123**	blasted	63	20	M12	13/-	42	21	-/25	-/22	20/-

Order No.	Form	Version	D1	D2	D5	H2	H3	L
06158-6032063X	L	blasted	32	12	M6	21	10	15/20/25/30/40/50
06158-6040083X	L	blasted	40	14	M8	26	13	20/25/30/40/50
06158-6050103X	L	blasted	50	18	M10	34	17	20/25/30/40/50
06158-6063123X	L	blasted	63	20	M12	42	21	20/30/40/50

Palm grips

grey cast iron DIN 6335

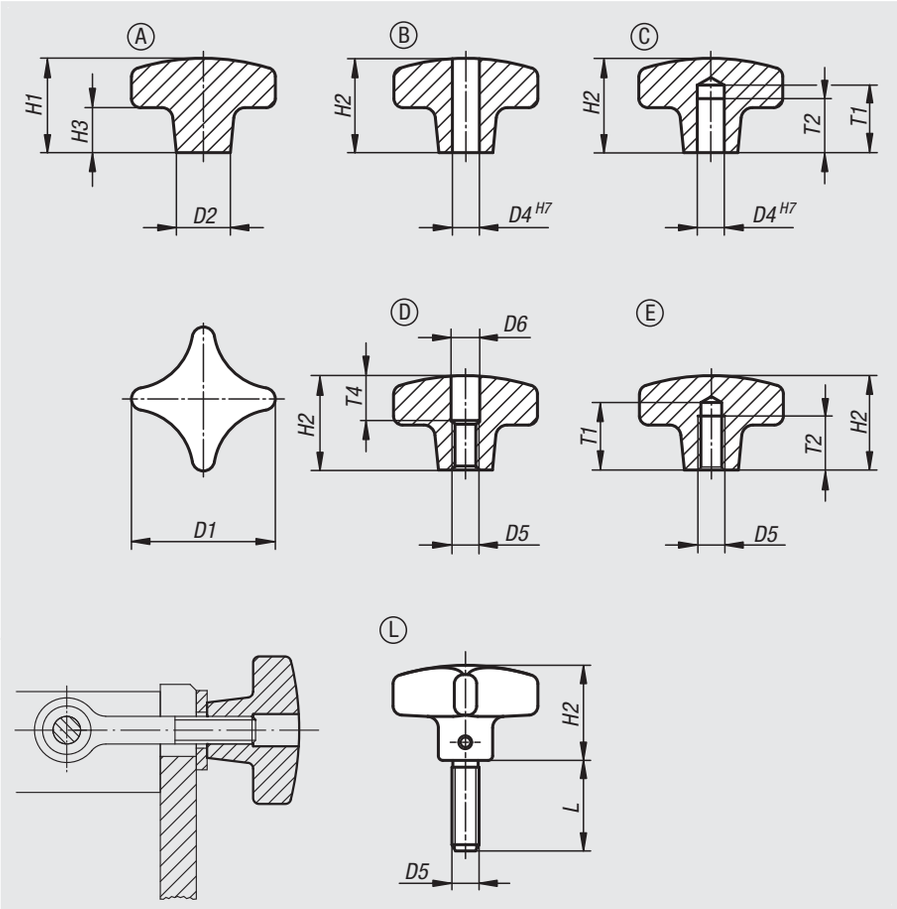

Material:
Grey cast iron GJL 200.
Grub screw stainless steel 1.4305.
Pin stainless steel 1.4310.

Version:
Vibratory ground, bright.
Grub screw and pin bright.

Sample order:
nlm 06160-106

Drawing reference:
Form A: blank
Form B: drilled through
Form C: blind hole
Form D: tapped and counterbored
Form E: tapped blind hole
Form L: external thread

Order No. Form A	Order No. Form B	Version	D1	D2	D4	H1	H2	H3
06160-106	**06160-206**	tumbled	32	12	-/6	21/-	-/20	10/-
06160-108	**06160-208**	tumbled	40	14	-/8	26/-	-/25	14/-
06160-110	**06160-210**	tumbled	50	18	-/10	34/-	-/32	20/-
06160-112	**06160-212**	tumbled	63	20	-/12	42/-	-/40	25/-
06160-116	**06160-216**	tumbled	80	25	-/16	52/-	-/50	30/-
06160-120	**06160-220**	tumbled	100	32	-/20	65/-	-/63	38/-

Order No. Form C	Order No. Form D	Order No. Form E	Version	D1	D2	D4	D5	D6	H2	T1	T2	T4
06160-306	**06160-406**	**06160-506**	tumbled	32	12	6/-/-	-/M6/M6	-/6,4/-	20/20/20	15/-/15	12/-/12	-/10/-
06160-308	**06160-408**	**06160-508**	tumbled	40	14	8/-/-	-/M8/M8	-/8,4/-	25/25/25	18/-/18	15/-/15	-/12/-
06160-310	**06160-410**	**06160-510**	tumbled	50	18	10/-/-	-/M10/M10	-/10,5/-	32/32/32	21/-/21	18/-/18	-/16/-
06160-312	**06160-412**	**06160-512**	tumbled	63	20	12/-/-	-/M12/M12	-/13/-	40/40/40	25/-/25	22/-/22	-/20/-
06160-316	**06160-416**	**06160-516**	tumbled	80	25	16/-/-	-/M16/M16	-/17/-	50/50/50	32/-/32	28/-/28	-/30/-
06160-320	**06160-420**	**06160-520**	tumbled	100	32	20/-/-	-/M20/M20	-/21/-	63/63/63	40/-/40	36/-/36	-/38/-

Order No.	Form	Version	D1	D2	D5	H2	L
06160-606X	L	tumbled	32	12	M6	20	15/20/25/30/40/50
06160-608X	L	tumbled	40	14	M8	25	20/25/30/40/50
06160-610X	L	tumbled	50	18	M10	32	20/25/30/40/50
06160-612X	L	tumbled	63	20	M12	40	20/30/40/50

Palm grips

plastic coated grey cast iron, DIN 6335

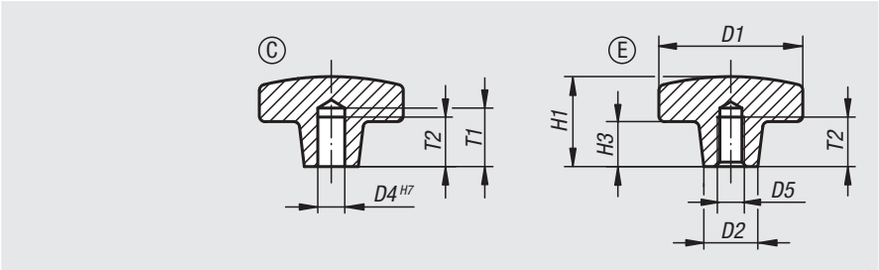

Material:
Grey cast iron GJL 200.

Version:
Plastic coated.

Sample order:
nlm 06161-212

Note:
Available colours:
Pure orange RAL 2004.
Jet black RAL 9005.

Drawing reference:
Form C: blind hole
Form E: tapped blind hole

Order No. orange	Order No. black	Form	D1	D2	D4	D5	H1	H3	T1	T2
06161-108	**06161-208**	C	40	14	8	-	26	14	18	15
06161-110	**06161-210**	C	50	18	10	-	34	20	21	18
06161-112	**06161-212**	C	63	20	12	-	42	25	25	22
06161-116	**06161-216**	C	80	25	16	-	52	30	32	28
06161-308	**06161-408**	E	40	14	-	M8	26	14	-	15
06161-310	**06161-410**	E	50	18	-	M10	34	20	-	18
06161-312	**06161-412**	E	63	20	-	M12	42	25	-	22
06161-316	**06161-416**	E	80	25	-	M16	52	30	-	28

Palm grips

with threaded spindle

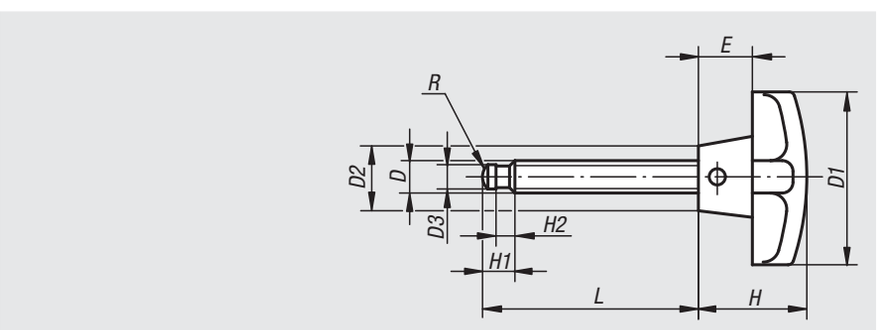

Material:
Palm grip grey cast iron.
Grup screw steel.

Version:
Palm grip painted.
Grub screw black oxidised.

Sample order:
nlm 06170-100064

Note:
The grub screw is screwed and pinned into the palm grip.

Order No.	D	D1	D2	D3	E	H	H1	H2	L	R
06170-060020	M6	32	12	4,5	10	20	6	2,5	20	3
06170-060040	M6	32	12	4,5	10	20	6	2,5	40	3
06170-080027	M8	40	14	6	14	25	7,5	3	27	5
06170-080047	M8	40	14	6	14	25	7,5	3	47	5
06170-100044	M10	50	18	8	20	32	9	4,5	44	6
06170-100064	M10	50	18	8	20	32	9	4,5	64	6
06170-120040	M12	63	20	8	25	40	10	4,5	40	6
06170-120060	M12	63	20	8	25	40	10	4,5	60	6
06170-120080	M12	63	20	8	25	40	10	4,5	80	6
06170-160052	M16	80	25	12	30	50	12	5	52	9
06170-160072	M16	80	25	12	30	50	12	5	72	9
06170-160097	M16	80	25	12	30	50	12	5	97	9

Palm grips

similar to DIN 6335

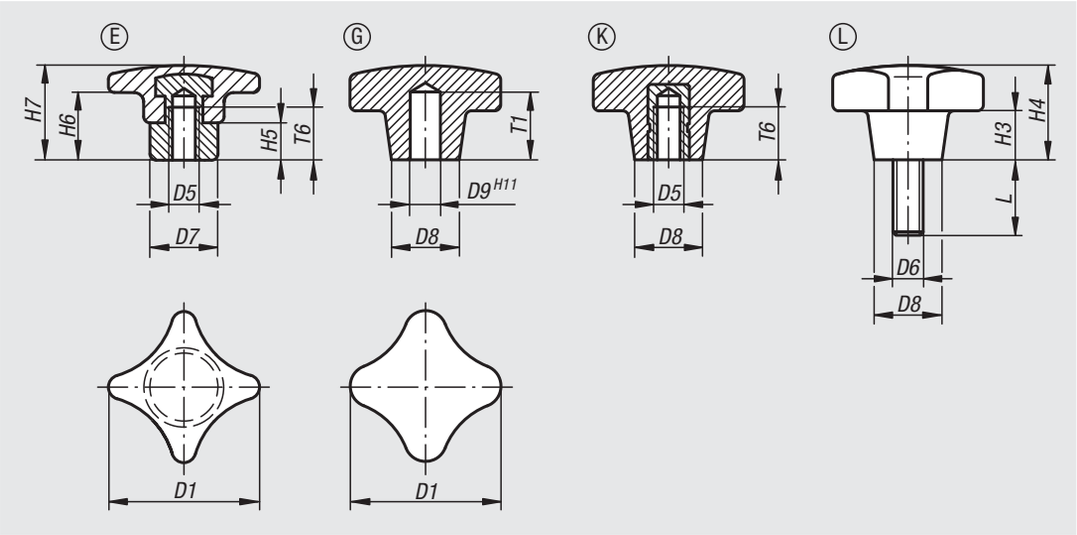

Material:
Black Duroplast PF 31.
Bush and screw galvanized steel.

Version:
High-gloss polished.

Sample order:
nlm 06180-505X30
(include length L)

Drawing reference:
Form E: projecting steel bush
Form G: blind hole
Form K: tapped bush
Form L: external thread

Order No.	Form	D1	D5	D7	H5	H6	H7	T6
06180-306	E	32	M6	12	9	12	23	12
06180-308	E	40	M8	14	10	13	26	15
06180-310	E	50	M10	18	12	18	32	18
06180-312	E	63	M12	20	14	23	40	22
06180-316	E	80	M16	25	17	28	50	28

Order No.	Form	D1	D8	D9	H3	H4	T1
06180-405	G	25	12	5	8	16	12
06180-406	G	32	14	6	10	20	15
06180-408	G	40	18	8	13	25	18
06180-410	G	50	22	10	20	32	21
06180-412	G	63	26	12	25	40	25

Order No.	Form	D1	D5	D8	H3	H4	T6
06180-205	K	25	M5	12	8	16	9,5
06180-206	K	32	M6	14	10	20	12
06180-208	K	40	M8	18	13	25	14
06180-210	K	50	M10	22	20	32	18
06180-212	K	63	M12	26	25	40	22
06180-216	K	80	M16	35	30	50	30

Order No.	Form	D1	D6	D8	H3	H4	L
06180-505X	L	25	M5	12	8	16	15/20/25/30/40/50
06180-506X	L	32	M6	14	10	20	15/20/25/30/40/50
06180-508X	L	40	M8	18	13	25	20/25/30/35/40/45/50
06180-510X	L	50	M10	22	20	32	20/25/30/35/40/45/50
06180-512X	L	63	M12	26	25	40	20/30/40/50/60

Palm grips

similar to DIN 6335 metal parts stainless-steel

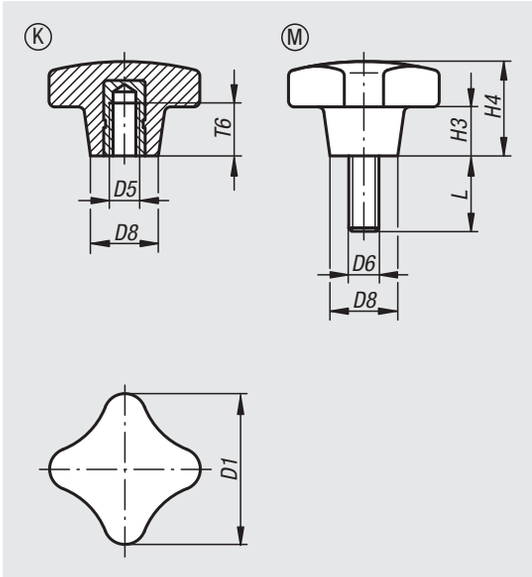

Material:
Duroplast PF 31, black.
Metal parts stainless steel 1.4301.

Version:
High-gloss polished, black.

Sample order:
nlm 06181-22505 (Form K)
06181-52505x15 (Form L)

Drawing reference:
Form K: tapped bush
Form L: external thread

Order No.	Component material	Form	D1	D5	D8	H3	H4	T6 min.
06181-22505	stainless steel	K	25	M5	12	8	16	7,5
06181-23206	stainless steel	K	32	M6	14	10	20	9
06181-24008	stainless steel	K	40	M8	18	13	25	12
06181-25010	stainless steel	K	50	M10	22	20	32	15
06181-26312	stainless steel	K	63	M12	26	25	40	18

Order No.	Component material	Form	D1	D6	D8	H3	H4	L
06181-52505X15	stainless steel	L	25	M5	12	8	16	15
06181-52505X20	stainless steel	L	25	M5	12	8	16	20
06181-53206X15	stainless steel	L	32	M6	14	10	20	15
06181-53206X20	stainless steel	L	32	M6	14	10	20	20
06181-53206X25	stainless steel	L	32	M6	14	10	20	25
06181-53206X30	stainless steel	L	32	M6	14	10	20	30
06181-53206X40	stainless steel	L	32	M6	14	10	20	40
06181-53206X50	stainless steel	L	32	M6	14	10	20	50
06181-54008X20	stainless steel	L	40	M8	18	13	25	20
06181-54008X25	stainless steel	L	40	M8	18	13	25	25
06181-54008X30	stainless steel	L	40	M8	18	13	25	30
06181-54008X40	stainless steel	L	40	M8	18	13	25	40
06181-54008X50	stainless steel	L	40	M8	18	13	25	50

Palm grips quick-acting

grey cast iron

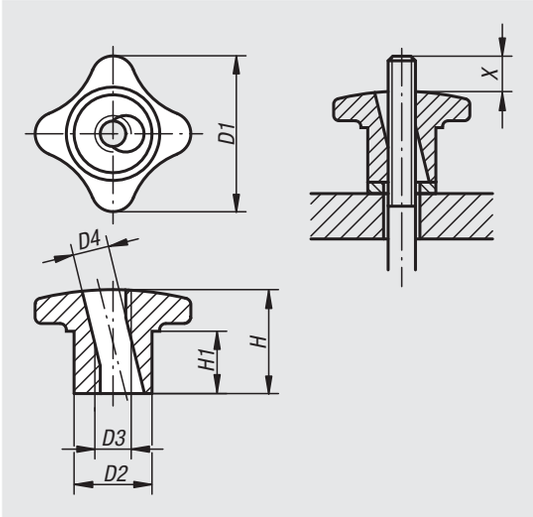

Material:
Grey cast iron GJL 300

Version:
Vibratory ground.

Sample order:
nlm 06190-08

Note:
Quick-acting palm grips can be used on all fixtures that do not require a high clamping force.
Tilt the grip to slide on, then straighten it to engage the threads.

Drawing reference:
X: The stud should be several mm longer than height “H”

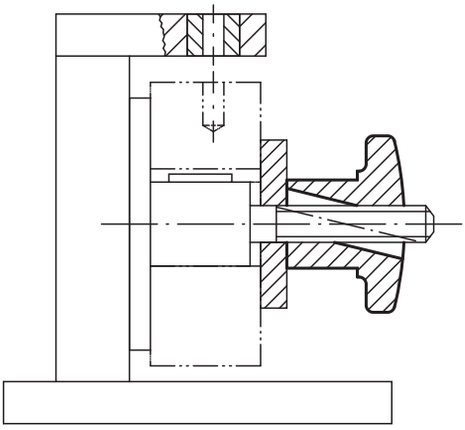

Order No.	D1	D2	D3	D4	H	H1
06190-06	30	15	M6	7	20	10
06190-08	40	18	M8	9,4	25	14
06190-10	50	21	M10	11,3	30	16
06190-12	60	26	M12	13,1	35	19
06190-14	70	30	M14	15,6	40	22
06190-16	80	34	M16	17,6	45	25

Notes

Star grips

aluminium, similar to DIN 6336

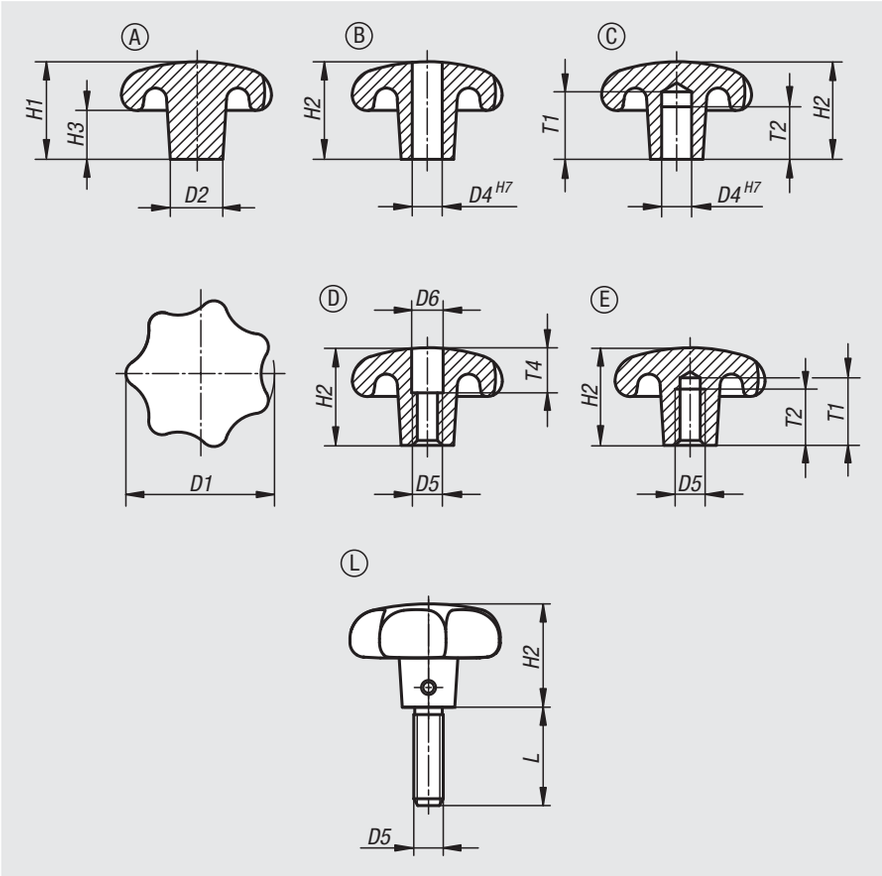

Material:
Aluminium.
Grub screw stainless steel 1.4305.
Pin stainless steel 1.4310.

Version:
Vibratory ground or ground and polished.
Grub screw and pin bright.

Sample order:
nlm 06192-14008

On request:
Blank star grips (not tumbled).

Drawing reference:
Form A: blank
Form B: drilled through
Form C: blind hole
Form D: tapped and counterbored
Form E: tapped blind hole
Form L: external thread

Order No.	Version	Form	D1	D2	H1	H3
06192-14008	tumbled	A	40	14	26	13
06192-15010	tumbled	A	50	18	34	17
06192-16312	tumbled	A	63	20	42	21
06192-18016	tumbled	A	80	25	52	25

Order No. tumbled	Order No. polished	Form	D1	D2	D4	H2
06192-24008	**06192-240082**	B	40	14	8	25
06192-25010	**06192-250102**	B	50	18	10	32
06192-26312	**06192-263122**	B	63	20	12	40
06192-28016	**06192-280162**	B	80	25	16	50

Star grips

aluminium, similar to DIN 6336

Order No. tumbled	Order No. polished	Form	D1	D2	D4	H2	T1	T2
06192-34008	**06192-340082**	C	40	14	8	25	18	15
06192-35010	**06192-350102**	C	50	18	10	32	21	18
06192-36312	**06192-363122**	C	63	20	12	40	25	22
06192-38016	**06192-380162**	C	80	25	16	50	32	28

Order No. tumbled	Order No. polished	Form	D1	D2	D5	D6	H2	T4
06192-44008	**06192-440082**	D	40	14	M8	8,4	25	12
06192-45010	**06192-450102**	D	50	18	M10	10,5	32	16
06192-46312	**06192-463122**	D	63	20	M12	13	40	20
06192-48016	**06192-480162**	D	80	25	M16	17	50	30

Order No. tumbled	Order No. polished	Form	D1	D2	D5	H2	T1	T2
06192-54008	**06192-540082**	E	40	14	M8	25	18	15
06192-55010	**06192-550102**	E	50	18	M10	32	21	18
06192-56312	**06192-563122**	E	63	20	M12	40	25	22
06192-58016	**06192-580162**	E	80	25	M16	50	32	28

Order No.	Form	Version	D1	D2	D5	H2	L
06192-64008X	L	tumbled	40	14	M8	25	20/25/30/40
06192-65010X	L	tumbled	50	18	M10	32	25/30/40/50
06192-66312X	L	tumbled	63	20	M12	40	30/40/50/60

Star grips

stainless steel, similar to DIN 6336

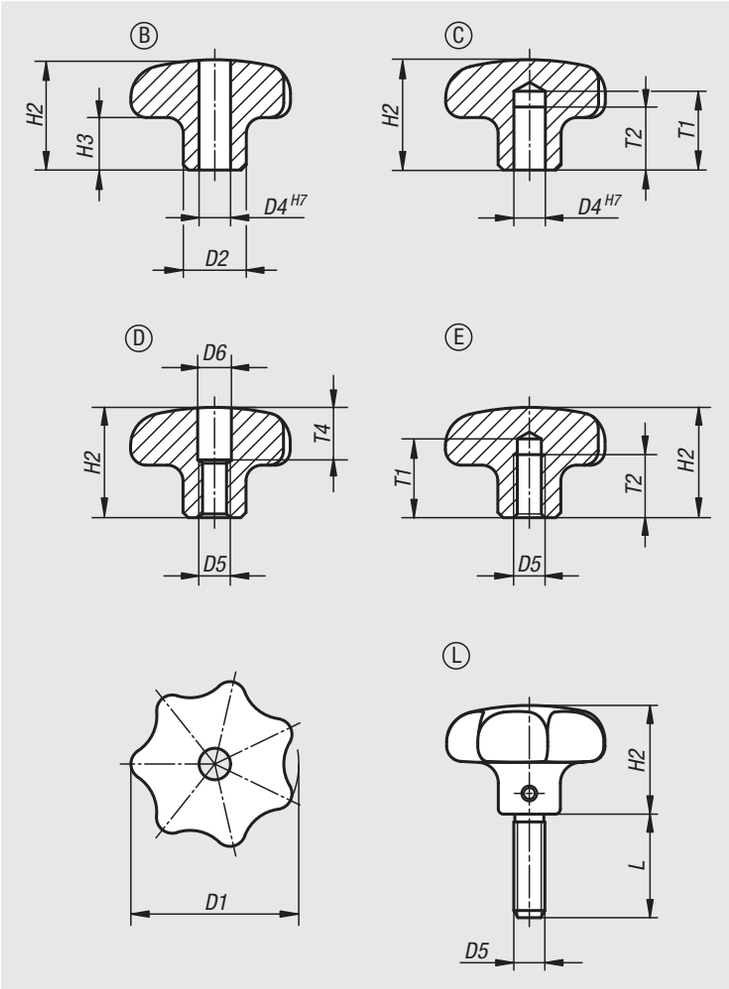

Material:
Stainless steel 1.4308.
Grub screw stainless steel 1.4305.
Pin stainless steel 1.4310.

Version:
Ground and polished or blasted.
Grub screw and pin bright.

Sample order:
nlm 06194-232062

Drawing reference:
Form B: drilled through
Form C: blind hole
Form D: tapped and counterbored
Form E: tapped blind hole
Form L: external thread

Star grips

stainless steel, similar to DIN 6336

Order No. Form B	Order No. Form C	Version	D1	D2	D4	H2	H3	T1	T2
06194-232062	**06194-332062**	polished	32	12	6	21	10	-/15	-/12
06194-240082	**06194-340082**	polished	40	14	8	26	13	-/18	-/15
06194-250102	**06194-350102**	polished	50	18	10	34	17	-/21	-/18
06194-263122	**06194-363122**	polished	63	20	12	42	21	-/25	-/22
06194-232063	**06194-332063**	blasted	32	12	6	21	10	-/15	-/12
06194-240083	**06194-340083**	blasted	40	14	8	26	13	-/18	-/15
06194-250103	**06194-350103**	blasted	50	18	10	34	17	-/21	-/18
06194-263123	**06194-363123**	blasted	63	20	12	42	21	-/25	-/22

Order No. Form D	Order No. Form E	Version	D1	D2	D5	D6	H2	H3	T1	T2	T4
06194-432062	**06194-532062**	polished	32	12	M6	6,4/-	21	10	-/15	-/12	10/-
06194-440082	**06194-540082**	polished	40	14	M8	8,4/-	26	13	-/18	-/15	12/-
06194-450102	**06194-550102**	polished	50	18	M10	10,5/-	34	17	-/21	-/18	16/-
06194-463122	**06194-563122**	polished	63	20	M12	13/-	42	21	-/25	-/22	20/-
06194-432063	**06194-532063**	blasted	32	12	M6	6,4/-	21	10	-/15	-/12	10/-
06194-440083	**06194-540083**	blasted	40	14	M8	8,4/-	26	13	-/18	-/15	12/-
06194-450103	**06194-550103**	blasted	50	18	M10	10,5/-	34	17	-/21	-/18	16/-
06194-463123	**06194-563123**	blasted	63	20	M12	13/-	42	21	-/25	-/22	20/-

Order No.	Form	Version	D1	D2	D5	H2	H3	L
06194-632063X	L	blasted	32	12	M6	21	10	15/20/25/30
06194-640083X	L	blasted	40	14	M8	26	13	20/25/30/40
06194-650103X	L	blasted	50	18	M10	34	17	25/30/40/50
06194-663123X	L	blasted	63	20	M12	42	21	30/40/50/60

Star grips

grey cast iron, DIN 6336

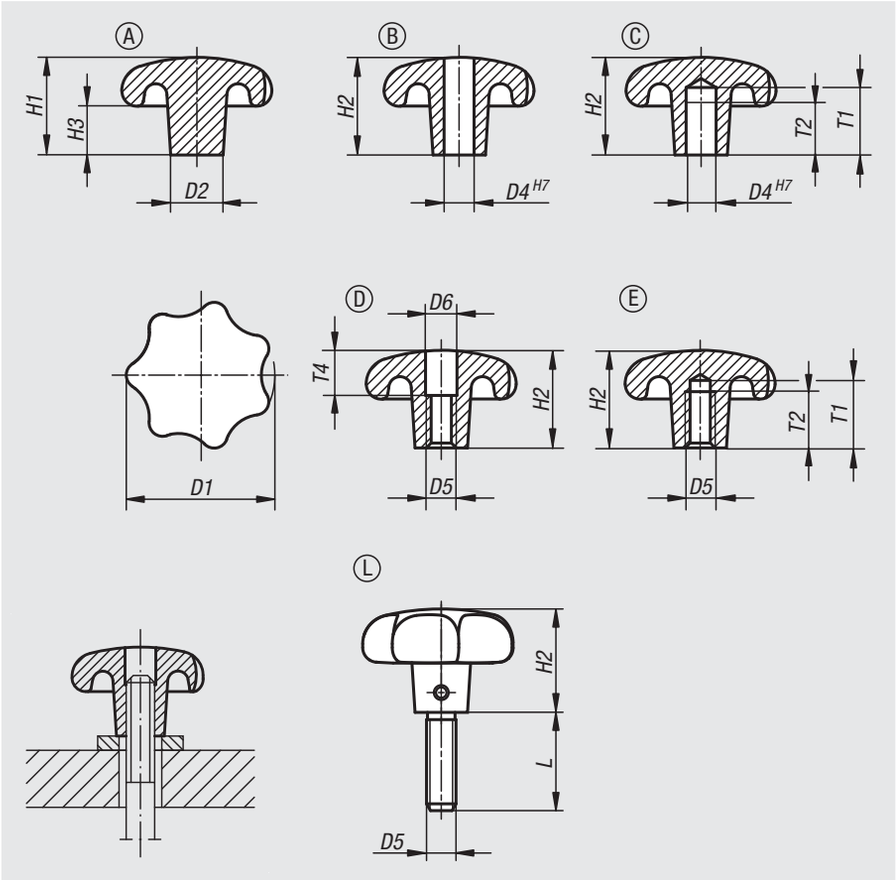

Material:
Grey cast iron GJL 200.
Grub screw stainless steel 1.4305.
Pin stainless steel 1.4310.

Version:
Vibratory ground, bright.
Grub screw and pin bright.

Sample order:
nlm 06200-106

On request:
Grips with a plastic coating.

Drawing reference:
Form A: blank
Form B: drilled through
Form C: blind hole
Form D: tapped and counterbored
Form E: tapped blind hole
Form L: external thread

Order No. Form A	Order No. Form B	Version	D1	D2	D4	H1	H2	H3
06200-106	**06200-206**	tumbled	32	12	-/6	21/-	-/20	10/-
06200-108	**06200-208**	tumbled	40	14	-/8	26/-	-/25	13/-
06200-110	**06200-210**	tumbled	50	18	-/10	34/-	-/32	17/-
06200-112	**06200-212**	tumbled	63	20	-/12	42/-	-/40	21/-
06200-116	**06200-216**	tumbled	80	25	-/16	52/-	-/50	25/-

Order No. Form C	Order No. Form D	Order No. Form E	Version	D1	D2	D4	D5	D6	H2	T1	T2	T4
06200-306	**06200-406**	**06200-506**	tumbled	32	12	6/-/-	-/M6/M6	-/6,4/-	20/20/20	15/-/15	12/-/12	-/10/-
06200-308	**06200-408**	**06200-508**	tumbled	40	14	8/-/-	-/M8/M8	-/8,4/-	25/25/25	18/-/18	15/-/15	-/12/-
06200-310	**06200-410**	**06200-510**	tumbled	50	18	10/-/-	-/M10/M10	-/10,5/-	32/32/32	21/-/21	18/-/18	-/16/-
06200-312	**06200-412**	**06200-512**	tumbled	63	20	12/-/-	-/M12/M12	-/13/-	40/40/40	25/-/25	22/-/22	-/20/-
06200-316	**06200-416**	**06200-516**	tumbled	80	25	16/-/-	-/M16/M16	-/17/-	50/50/50	32/-/32	28/-/28	-/30/-

Order No.	Form	Version	D1	D2	D5	H2	L
06200-606X	L	tumbled	32	12	M6	20	15/20/25/30
06200-608X	L	tumbled	40	14	M8	25	20/25/30/40
06200-610X	L	tumbled	50	18	M10	32	25/30/40/50
06200-612X	L	tumbled	63	20	M12	40	30/40/50/60

Star grips

similar to DIN 6336

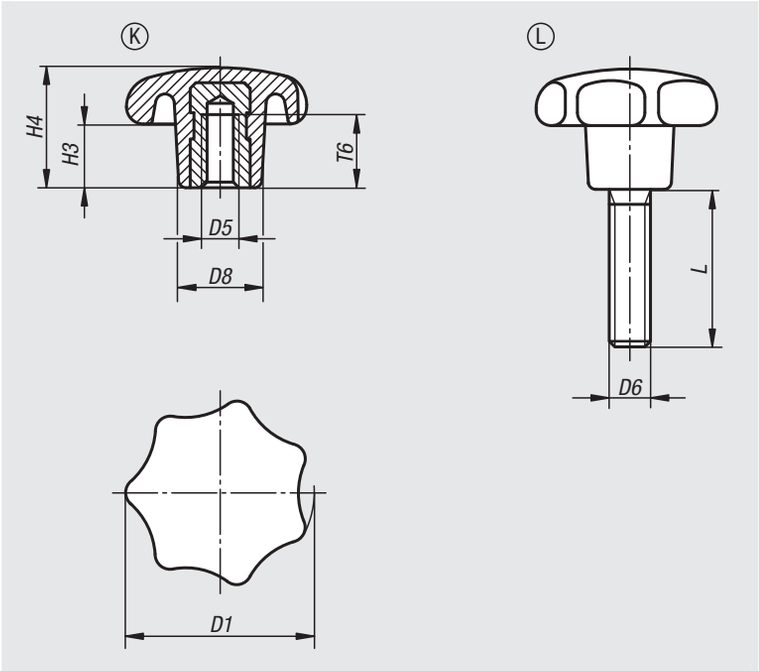

Material:
Duroplast PF 31, black.
Bush and screw steel, galvanized and blue passivated.

Version:
High-gloss polished.

Sample order:
nlm 06208-42505X15 (include length L)

Note:
The version 06208-22004 has a brass bush.

On request:
Other colours.

Drawing reference:
Form K: tapped bush
Form L: external thread

Order No.	Form	D1	D5	D8	H3	H4	T6
06208-22004	K	20	M4	10	7	13	6,5
06208-22505	K	25	M5	12	8	16	9,5
06208-23206	K	32	M6	14	10	20	12
06208-24008	K	40	M8	18	13	25	14
06208-25010	K	50	M10	22	17	32	18
06208-26312	K	63	M12	26	21	40	22
06208-28016	K	80	M16	35	25	50	30

Order No.	Form	D1	D6	D8	H3	H4	L
06208-42505X	L	25	M5	12	8	16	15/20/25
06208-43206X	L	32	M6	14	10	20	15/20/25/30
06208-44008X	L	40	M8	18	13	25	20/25/30/35/40
06208-45010X	L	50	M10	22	17	32	25/30/35/40/50
06208-46312X	L	63	M12	26	21	40	30/35/40/50/60
06208-48016X	L	80	M16	35	25	50	30/40/50/60

Star grips

similar to DIN 6336, metal parts stainless steel

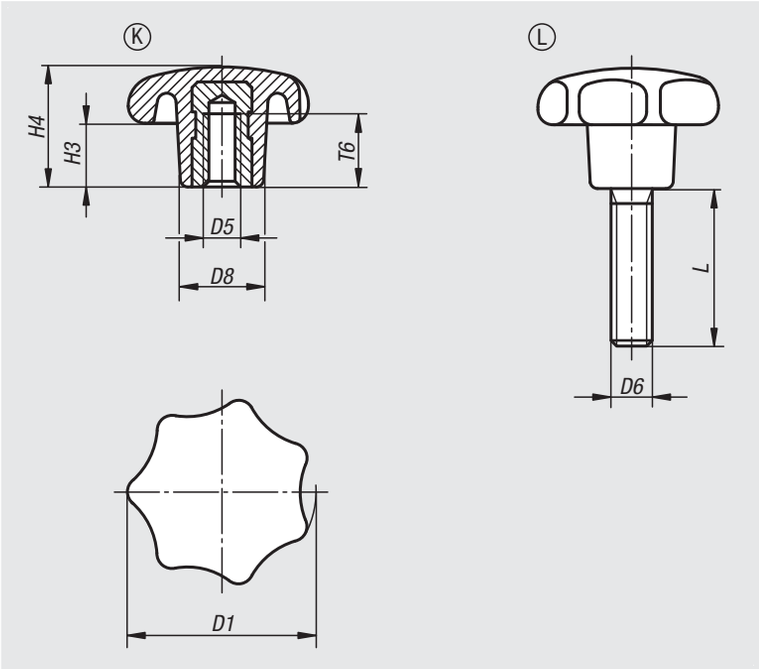

Material:
Duroplast PF 31, black.
Bushing or threaded pin stainless steel 1.4301.

Version:
High-gloss polished.

Sample order:
nlm 06209-24008

On request:
Other colours.

Drawing reference:
Form K: tapped bush
Form L: external thread

Order No.	Component material	Form	D1	D5	D8	H3	H4	T6	T6 min.
06209-23206	stainless steel	K	32	M6	14	10	20	12	9
06209-24008	stainless steel	K	40	M8	18	13	25	14	12
06209-25010	stainless steel	K	50	M10	22	17	32	18	15
06209-26312	stainless steel	K	63	M12	26	21	40	22	18

Order No.	Component material	Form	D1	L	D6	D8	H3	H4
06209-43206X15	stainless steel	L	32	15	M6	14	10	20
06209-43206X20	stainless steel	L	32	20	M6	14	10	20
06209-43206X25	stainless steel	L	32	25	M6	14	10	20
06209-43206X30	stainless steel	L	32	30	M6	14	10	20
06209-44008X20	stainless steel	L	40	20	M8	18	13	25
06209-44008X25	stainless steel	L	40	25	M8	18	13	25
06209-44008X30	stainless steel	L	40	30	M8	18	13	25
06209-44008X40	stainless steel	L	40	40	M8	18	13	25

Notes

Star grips

with projecting steel bush

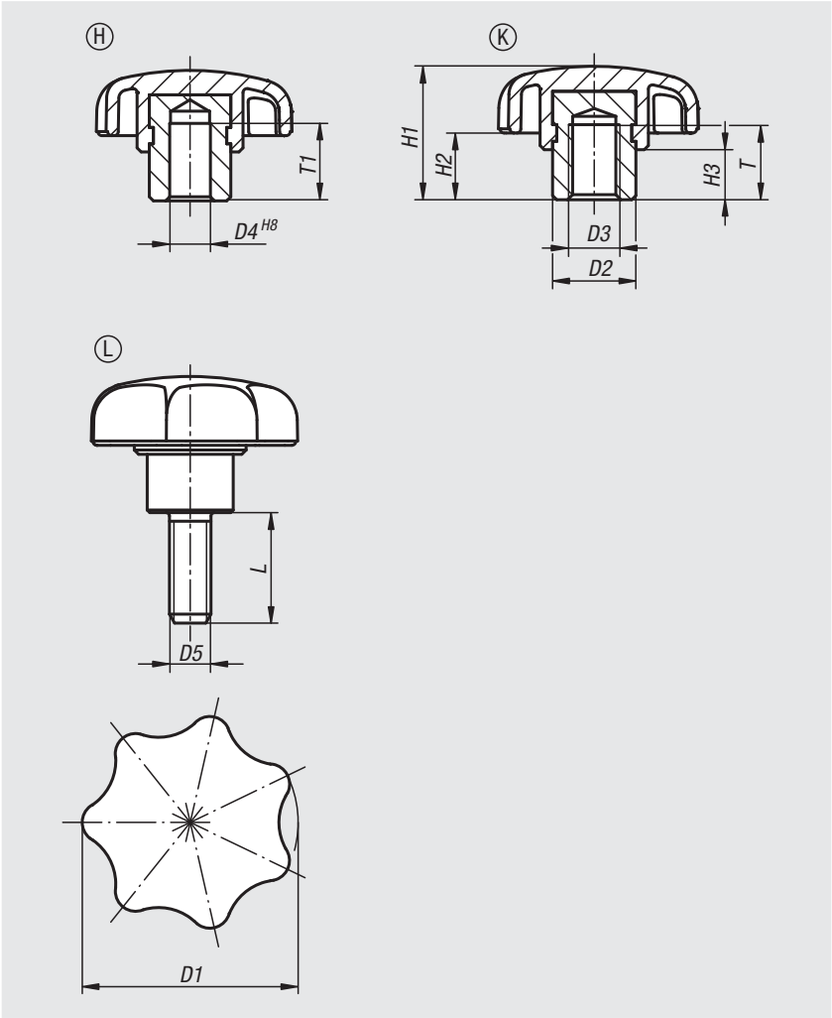

Material:
Black thermoplastic.
Steel grade 5.8 or stainless steel 1.4305.

Version:
Metal parts blue passivated steel or bright stainless steel.

Sample order:
nlm 06210-2081

Note:
The projecting steel bush make these star grips very suitable as blind hole or internal thread versions especially for cross pinning.

Drawing reference:
Form H: bush with blind hole
Form K: tapped bush
Form L: external thread

Star grips

with projecting steel bush

Order No.	Component material	Form	D4	T1	D1	D2	H1	H2	H3
06210-105	steel	H	5	9,5	25	10	17	9	7
06210-106	steel	H	6	12,5	32	13,5	21	11	9,5
06210-1061	steel	H	6	12,5	40	13,5	25	13	10
06210-108	steel	H	8	12,5	40	13,5	25	13	10
06210-1081	steel	H	8	19,5	50	19	32	17	12
06210-110	steel	H	10	19,5	50	19	32	17	12
06210-1101	steel	H	10	19,5	63	19	37	18	12
06210-112	steel	H	12	19,5	63	19	37	18	12
06210-116	steel	H	16	24,5	63	23	40	21	15

Order No. steel	Order No. stainless steel	Form	D3	T	D1	D2	H1	H2	H3
06210-205	**06210-305**	K	M5	9	25	10	17	9	7
06210-206	**06210-306**	K	M6	12	32	13,5	21	11	9,5
06210-2061	**06210-3061**	K	M6	12	40	13,5	25	13	10
06210-208	**06210-308**	K	M8	12	40	13,5	25	13	10
06210-2081	**06210-3081**	K	M8	17	50	19	32	17	12
06210-210	**06210-310**	K	M10	17	50	19	32	17	12
06210-2101	**06210-3101**	K	M10	17	63	19	37	18	12
06210-212	**06210-312**	K	M12	17	63	19	37	18	12
06210-216	**06210-316**	K	M16	23	63	23	40	21	15

Order No. steel	Order No. stainless steel	Form	D5	D1	D2	H1	H2	H3	L
06210-405X	**06210-505X**	L	M5	25	10	17	9	7	10/15/20
06210-406X	**06210-506X**	L	M6	32	13,5	21	11	9,5	10/15/20/25/30
06210-408X	**06210-508X**	L	M8	40	13,5	25	13	10	15/20/25/30/40/50
06210-410X	**06210-510X**	L	M10	50	19	32	17	12	20/25/30/40/50/60
06210-412X	**06210-512X**	L	M12	63	19	37	18	12	20/25/30/40/50/60

Star grips

metal parts stainless steel, similar to DIN 6336

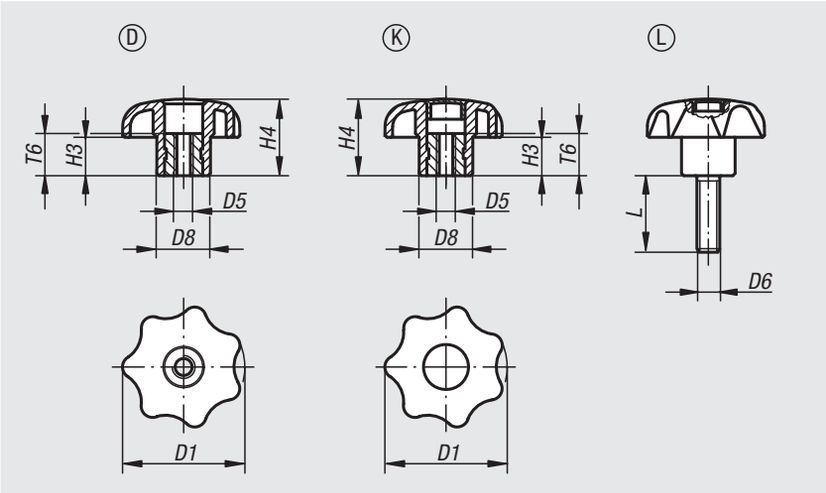

Material:
Black thermoplastic.
Bush and screw stainless steel 1.4305.

Version:
Bush and screw bright.

Sample order:
nlm 06212-4067X30
(cap colour bright yellow; include length L)

Note:
Δ Add the desired cap colour code here. No colour code is required for black caps.

On request:
Other colours or designs, such as company logo.

Drawing reference:
Form D: tapped bush without cap
Form K: tapped bush with cap
Form L: external thread

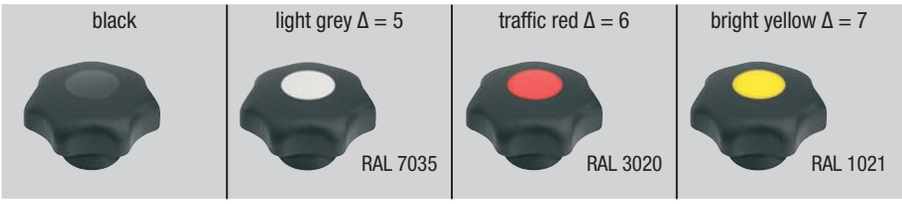

Order No.	Form	D1	D5	D8	H3	H4	T6
06212-505	D	25	M5	12	8	16	10
06212-506	D	32	M6	14	10	20	10
06212-508	D	40	M8	18	13	25	14
06212-510	D	50	M10	22	17	32	14
06212-512	D	63	M12	26	21	40	18

Order No.	Form	D1	D5	D8	H3	H4	T6
06212-205Δ	K	25	M5	12	8	16	10
06212-206Δ	K	32	M6	14	10	20	10
06212-208Δ	K	40	M8	18	13	25	14
06212-210Δ	K	50	M10	22	17	32	14
06212-212Δ	K	63	M12	26	21	40	18

Order No.	Form	D1	D6	D8	H3	H4	L
06212-405ΔX	L	25	M5	12	8	16	15/20
06212-406ΔX	L	32	M6	14	10	20	20/30
06212-408ΔX	L	40	M8	18	13	25	15/20/25/30/40/60
06212-410ΔX	L	50	M10	22	17	32	25/30/40/50/60

Star grips with safety cable

metal parts stainless steel, similar to DIN 6336

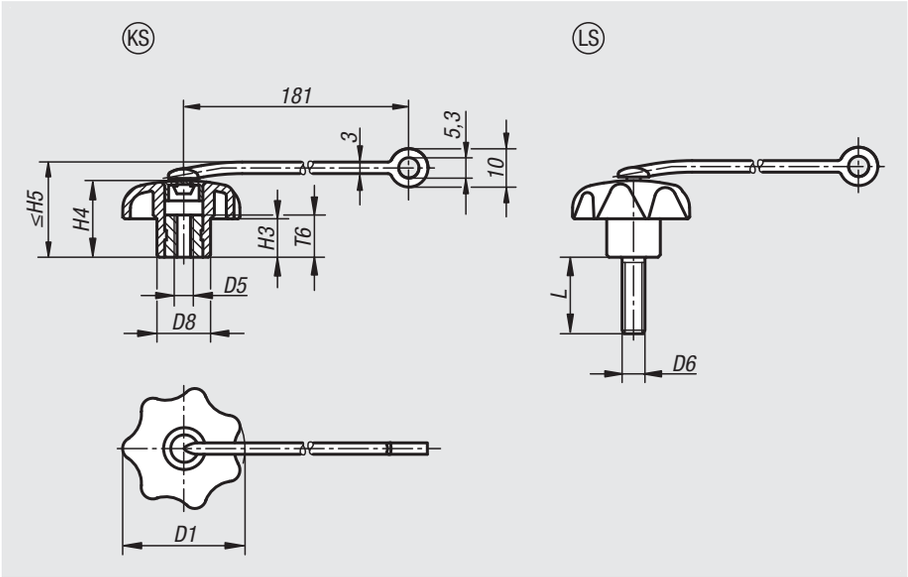

Material:
Grip thermoplastic.
Bush and screw stainless steel 1.4305.
Safety cable elastic TPU.

Version:
Bush and screw bright.

Sample order:
nlm 06212-7056X15 (cap colour: traffic red; include length L)

Note:
Δ Add the desired cap colour code here. No colour code is required for black caps.

Attach the safety cable to a base to make the star grip unlosable.
The star grip cannot be moved far from the object to which it belongs, simplifying screwing and unscrewing of the grip and ensuring against loss.

Assembly:
Do not stretch the band during assembly.
Make sure that the anchor is not too far from where the star grip is to be used.

Accessories:
The safety cable is also available as an accessory, see 03198-04190.

Drawing reference:
Form KS: tapped bush, with cap
Form LS: male thread

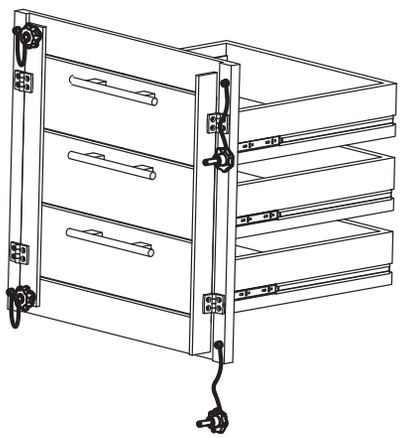

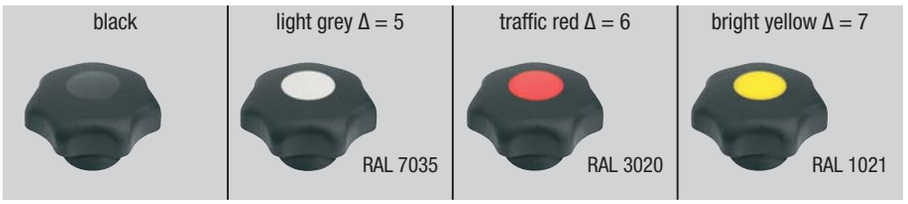

Order No.	Form	D1	D5	D8	H3	H4	H5 max.	T6
06212-605Δ	KS	25	M5	12	8	16	22	10
06212-606Δ	KS	32	M6	14	10	20	26	10
06212-608Δ	KS	40	M8	18	13	25	31	14
06212-610Δ	KS	50	M10	22	17	32	38	14
06212-612Δ	KS	63	M12	26	21	40	46	18

Order No.	Form	D1	D6	D8	H3	H4	H5 max.	L
06212-705ΔX	LS	25	M5	12	8	16	22	15/20
06212-706ΔX	LS	32	M6	14	10	20	26	20/30
06212-708ΔX	LS	40	M8	18	13	25	31	15/20/25/30/40/60
06212-710ΔX	LS	50	M10	22	17	32	38	25/30/40/50/60

Star grips

similar to DIN 6336

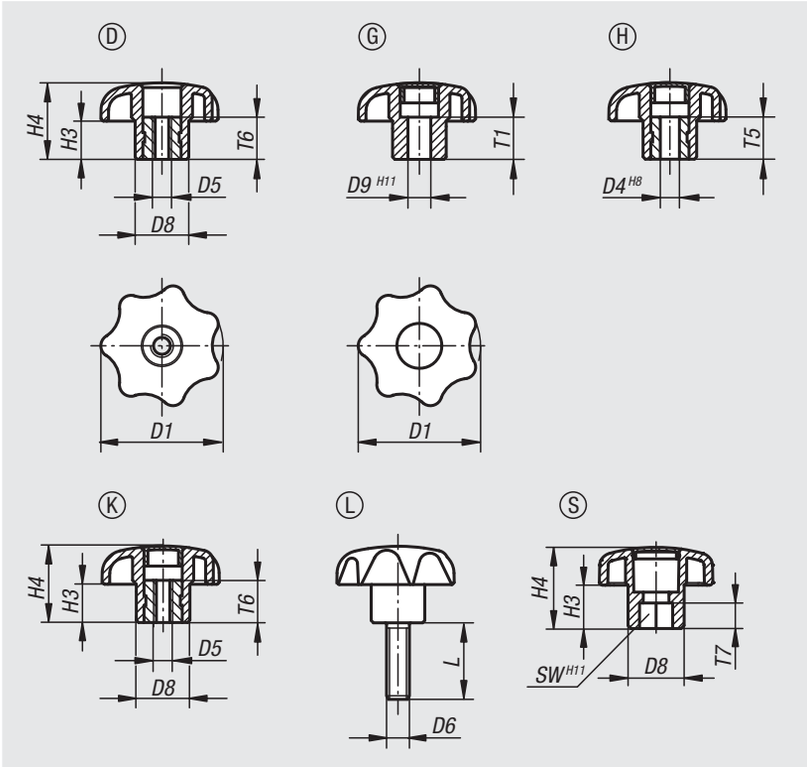

Material:
Black thermoplastic.
Bush and screw steel.

Version:
Bush and screw, galvanized and blue passivated.

Sample order:
nlm 06220-4127X30 (cap colour bright yellow; include length L)

Note:
Δ Add the desired cap colour code here. No colour code is required for black caps.

On request:
Other colours or designs, such as company logo.

Drawing reference:
Form D: tapped bush without cap
Form G: without bush
Form H: with reamed bush
Form K: tapped bush with cap
Form L: external thread
Form S: hexagon

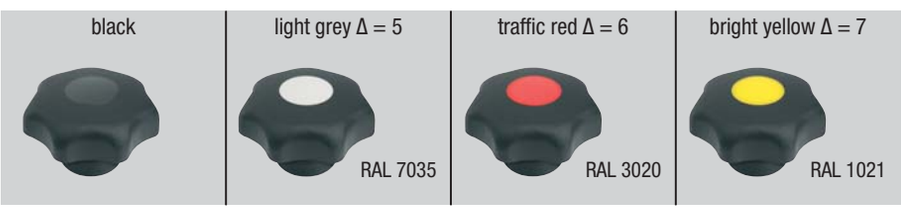

Order No.	Form	D1	D5	D8	H3	H4	SW	T6	T7
06220-504	D	25	M4	12	8	16	-	10	-
06220-505	D	25	M5	12	8	16	-	10	-
06220-5061	D	25	M6	12	8	16	-	10	-
06220-5051	D	32	M5	14	10	20	-	10	-
06220-506	D	32	M6	14	10	20	-	10	-
06220-508	D	40	M8	18	13	25	-	14	-
06220-5101	D	40	M10	18	13	25	-	14	-
06220-5081	D	50	M8	22	17	32	-	14	-
06220-510	D	50	M10	22	17	32	-	14	-
06220-5121	D	50	M12	22	17	32	-	18	-
06220-5102	D	63	M10	26	21	40	-	14	-
06220-512	D	63	M12	26	21	40	-	18	-
06220-516	D	63	M16	26	21	40	-	18	-
06220-808	S	32	-	14	10	20	8	-	5
06220-810	S	40	-	18	13	25	10	-	10
06220-813	S	50	-	22	17	32	13	-	10
06220-816	S	63	-	26	21	40	16	-	15

Star grips

similar to DIN 6336

examples of grip cap designs

Order No.	Form	D1	D5	D8	H3	H4	T6
06220-204Δ	K	25	M4	12	8	16	10
06220-205Δ	K	25	M5	12	8	16	10
06220-2061Δ	K	25	M6	12	8	16	10
06220-2051Δ	K	32	M5	14	10	20	10
06220-206Δ	K	32	M6	14	10	20	10
06220-208Δ	K	40	M8	18	13	25	14
06220-2101Δ	K	40	M10	18	13	25	14
06220-2081Δ	K	50	M8	22	17	32	14
06220-210Δ	K	50	M10	22	17	32	14
06220-2121Δ	K	50	M12	22	17	32	18
06220-2102Δ	K	63	M10	26	21	40	14
06220-212Δ	K	63	M12	26	21	40	18
06220-216Δ	K	63	M16	26	21	40	18

Order No. Form G	Order No. Form H	D1	D4	D8	D9	H3	H4	T1	T5
06220-305Δ	06220-105Δ	25	-/5	12	5/-	8	16	10/-	-/10
06220-306Δ	06220-106Δ	32	-/6	14	6/-	10	20	10/-	-/10
06220-308Δ	06220-108Δ	40	-/8	18	8/-	13	25	14/-	-/14
06220-310Δ	06220-110Δ	50	-/10	22	10/-	17	32	14/-	-/14
-	06220-1101Δ	63	10	26	-	21	40	-	14
06220-312Δ	06220-112Δ	63	-/12	26	12/-	21	40	18/-	-/18

Order No.	Form	D1	D6	D8	H3	H4	L
06220-405ΔX	L	25	M5	12	8	16	10/15/20/25/30/35/40/45/50/60
06220-406ΔX	L	25	M6	12	8	16	10/15/20/25/30/35/40/45/50/60
06220-4061ΔX	L	32	M6	14	10	20	10/15/20/25/30/35/40/45/50/60
06220-408ΔX	L	32	M8	14	10	20	15/20/25/30/35/40/45/50/60
06220-4081ΔX	L	40	M8	18	13	25	15/20/25/30/35/40/45/50/60
06220-410ΔX	L	40	M10	18	13	25	15/20/25/30/35/40/45/50/60
06220-4101ΔX	L	50	M10	22	17	32	15/20/25/30/35/40/45/50/60
06220-412ΔX	L	50	M12	22	17	32	15/20/25/30/35/40/45/50/60
06220-4102ΔX	L	63	M10	26	21	40	20/25/30/35/40/45/50/60
06220-4121ΔX	L	63	M12	26	21	40	20/25/30/35/40/45/50/60
06220-416ΔX	L	63	M16	26	21	40	30/35/40/45/50/60

Star grips antistatic

similar to DIN 6336

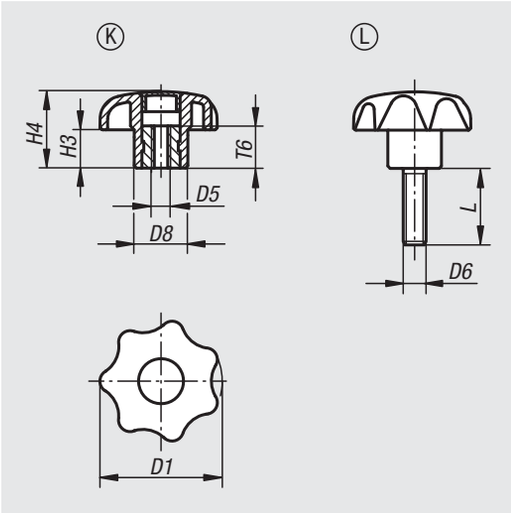

Material:
Thermoplastic, graphite black.
Bush or screw steel 5.8.

Version:
Screw blue passivated.

Sample order:
nlm 06220-1120824

Application:
Sensitive electrical or electronic equipment, components and devices (ESD sensitive elements) may be damaged or destroyed by electrostatic discharges (ESD) in the immediate vicinity.
Electrostatic discharges can come from people or through handling ESD sensitive components (e.g. during production, assembly, transport, storage etc).
Electrically conductive products which conform to DIN EN 61340-5-1 are essential within electronic environments to prevent an electrostatic discharge.
These products can be used for ESD applications or in ESD protection areas (EPA) in accordance with DIN EN 61340-5-1.
The yellow ESD logo is printed on the side of the product to clearly identify it.

Safety:
These ESD products can also be used for devices, components and protection systems in areas with high risk of explosion.
Use of these ESD products prevents the occurrence of electrostatic spark discharges, eliminating the potential ignition of gases and dusts which could lead to explosions in enclosed spaces.
Manufacturers and operators must use and conform to ATEX directives for the protection of persons working in areas with high risk of explosion.
These ESD products are certified by TÜV-Süd in relation to their electrical discharge capability.

Target groups:
Device manufacturers required to conform to ATEX product directive 2014/34/EU.
Operators required to conform to ATEX worker protection directive 1999/92/EC.

Drawing reference:
Form K: tapped bush, with cap
Form L: external thread

Order No.	Main colour	Form	D1	D5	D8	H3	H4	T6
06220-1120824	graphite black RAL 9011	K	40	M8	18	13	25	14

Order No.	Main colour	Form	D1	D6	D8	H3	H4	L
06220-11408124X25	graphite black RAL 9011	L	40	M8	18	13	25	25

Notes

Star grips with safety cable

similar to DIN 6336

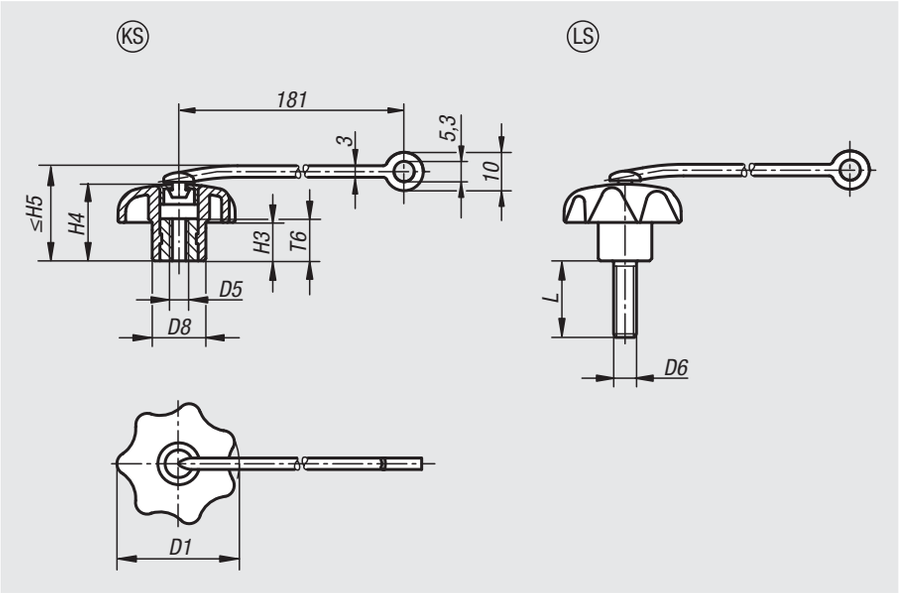

Material:
Grip thermoplastic.
Bush and screw steel.
Safety cable elastic TPU.

Version:
Bush and screw bright.

Sample order:
nlm 06220-7056X15
(cap colour traffic red; include length L)

Note:
Δ Add the desired cap colour code here. No colour code is required for black caps.

Attach the safety cable to a base to make the star grip unlosable. The star grip cannot be moved far from the object to which it belongs, simplifying screwing and unscrewing of the grip and ensuring against loss.

Assembly:
Do not stretch the band during assembly.
Make sure that the anchor is not too far from where the star grip is to be used.

Accessories:
The safety cable is also available as an accessory, see 03198-04190.

Drawing reference:
Form KS: tapped bush, with cap
Form LS: male thread

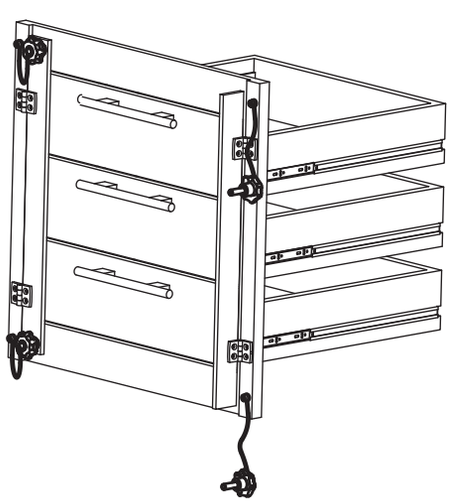

Star grips with safety cable

similar to DIN 6336

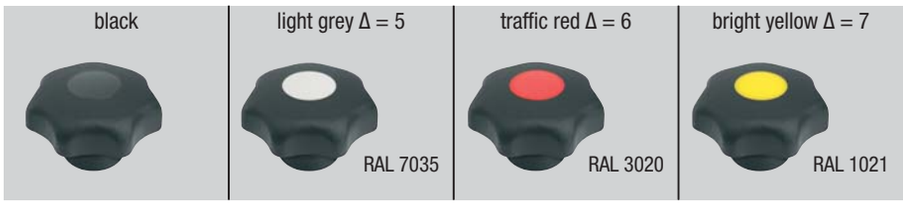

Order No.	Form	D1	D5	D8	H3	H4	H5 max.	T6
06220-604Δ	KS	25	M4	12	8	16	22	10
06220-605Δ	KS	25	M5	12	8	16	22	10
06220-6061Δ	KS	25	M6	12	8	16	22	10
06220-6051Δ	KS	32	M5	14	10	20	26	10
06220-606Δ	KS	32	M6	14	10	20	26	10
06220-608Δ	KS	40	M8	18	13	25	31	14
06220-6101Δ	KS	40	M10	18	13	25	31	14
06220-6081Δ	KS	50	M8	22	17	32	38	14
06220-610Δ	KS	50	M10	22	17	32	38	14
06220-6121Δ	KS	50	M12	22	17	32	38	14
06220-6102Δ	KS	63	M10	26	21	40	46	14
06220-612Δ	KS	63	M12	26	21	40	46	14
06220-616Δ	KS	63	M16	26	21	40	46	14

Order No.	Form	D1	D6	D8	H3	H4	H5 max.	L
06220-705ΔX	LS	25	M5	12	8	16	22	10/15/20/25/30/35/40/45/50/60
06220-706ΔX	LS	25	M6	12	8	16	22	10/15/20/25/30/35/40/45/50/60
06220-7061ΔX	LS	32	M6	14	10	20	26	10/15/20/25/30/35/40/45/50/60
06220-708ΔX	LS	32	M8	14	10	20	26	15/20/25/30/35/40/45/50/60
06220-7081ΔX	LS	40	M8	18	13	25	31	15/20/25/30/35/40/45/50/60
06220-710ΔX	LS	40	M10	18	13	25	31	15/20/25/30/35/40/45/50/60
06220-7101ΔX	LS	50	M10	22	17	32	38	15/20/25/30/35/40/45/50/60
06220-712ΔX	LS	50	M12	22	17	32	38	15/20/25/30/35/40/45/50/60
06220-7102ΔX	LS	63	M10	26	21	40	46	20/25/30/35/40/45/50/60
06220-7121ΔX	LS	63	M12	26	21	40	46	20/25/30/35/40/45/50/60
06220-716ΔX	LS	63	M16	26	21	40	46	30/35/40/45/50/60

06222

Star grips quick-acting

Material:
Black thermoplastic.
Bush steel.

Version:
Bush galvanised and blue passivated

Sample order:
nlm 06222-06

Note:
Quick-acting star grips can be used on all fixtures that do not require a high clamping force.
Tilt the grip to slide on, then straighten it to engage the threads.

Drawing reference:
X: The stud should be several mm longer than height “H1”

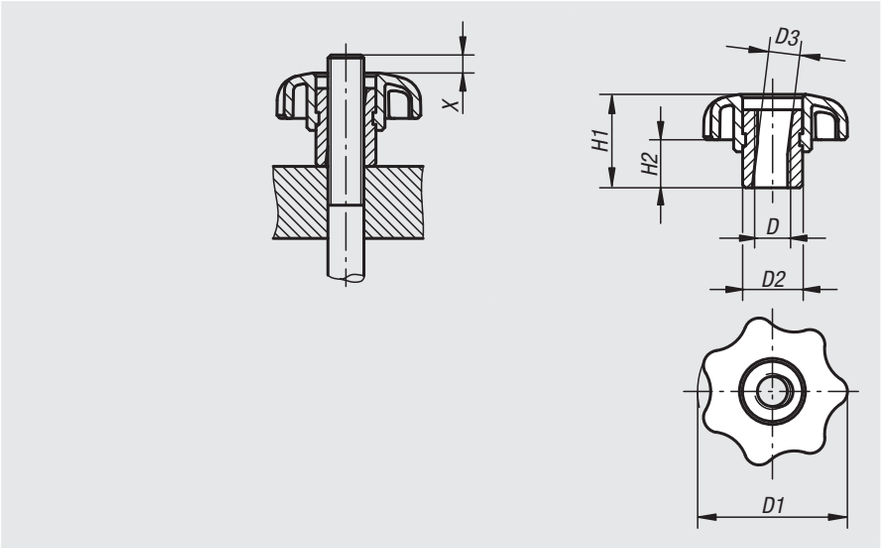

Order No.	D	D1	D2	D3	H1	H2
06222-05	M5	25	10	5,2	16,6	9
06222-06	M6	32	13,5	6,2	20,6	11
06222-08	M8	40	13,5	8,3	24,5	13
06222-10	M10	50	19	10,3	31,2	17
06222-12	M12	63	19	12,7	39,3	21

06230

Four-spoked nuts

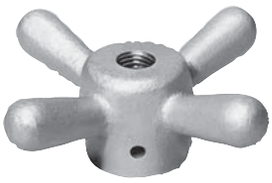

Material:
GJMW 350 malleable cast iron

Version:
Deburred and sand-blasted

Sample order:
nlm 06230-20

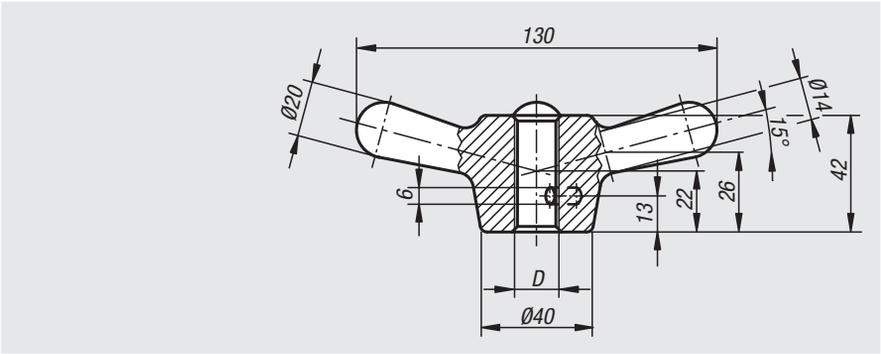

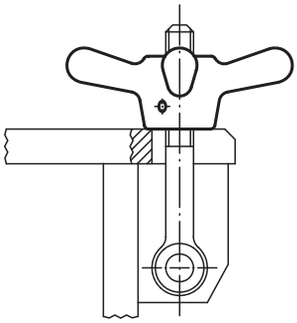

Order No.	D
06230-16	M16
06230-20	M20
06230-24	M24

Capstan wheel

Material:
Wheel steel.
Ball knop thermoplastic.

Version:
Wheel black oxidised.
Ball knob black.

Sample order:
nlm 06235-160

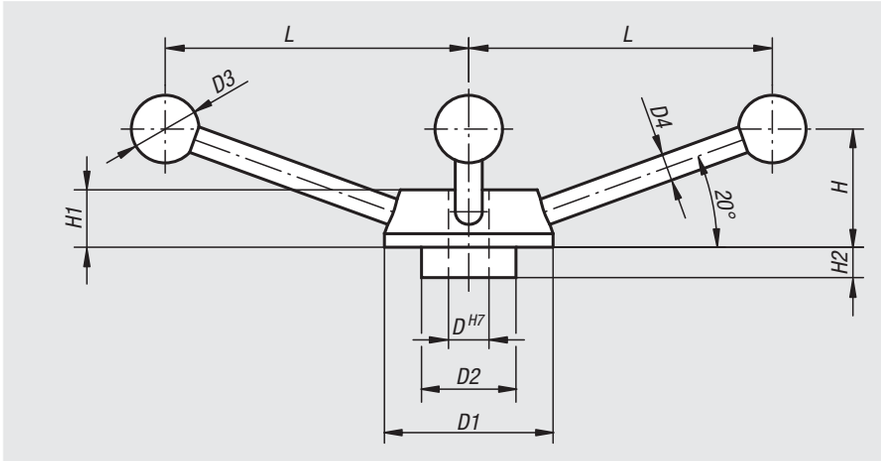

Order No.	D	D1	D2	D3	D4	H	H1	H2	L
06235-120	12	50	28	20	8	35	17	9	90
06235-140	14	55	30	25	10	38	18	10	99
06235-160	16	65	35	30	12	45	20	12	119
06235-200	20	80	44	40	14	56	24	16	150

Notes

Knobs flat

Material:
Steel.

Version:
Black oxidised.

Sample order:
nlm 06237-08

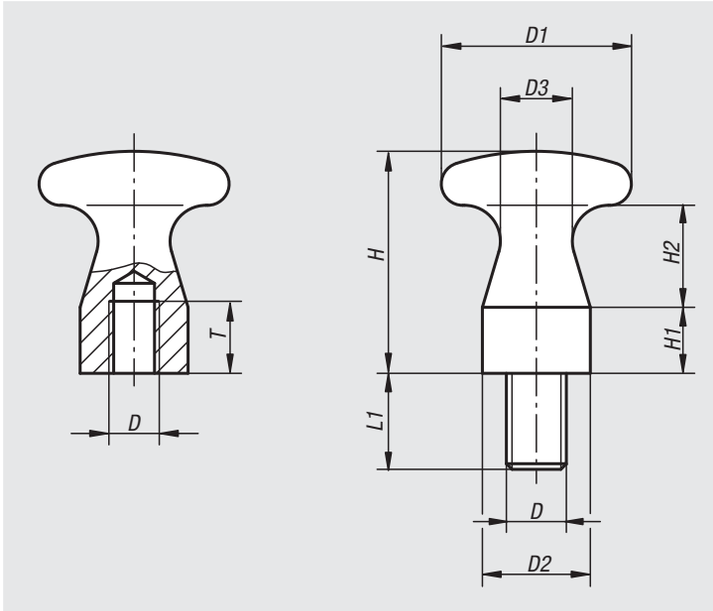

Knobs flat, internal thread

Order No.	D	D1	D2	D3	H	H1	H2	T
06237-05	M5	16	10	6	18	5	9	7
06237-06	M6	25	14	10	29	9	13	9
06237-08	M8	32	18	12	37	11	17	12
06237-10	M10	36	20	13	42	12	20	15

Knobs flat, external thread

Order No.	D	D1	D2	D3	H	H1	H2	L1
06237-06010	M6	16	10	6	18	5	9	10
06237-08014	M8	25	14	10	29	9	13	14
06237-10016	M10	32	18	12	37	11	17	16
06237-12018	M12	36	20	13	42	12	20	18

Mushroom knobs

with internal thread

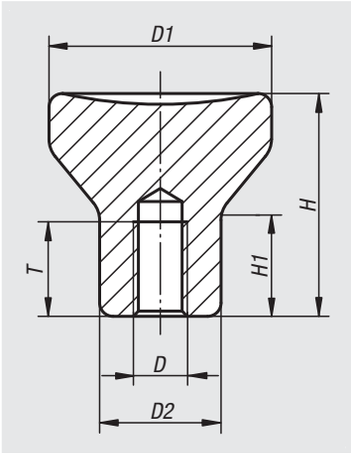

Material:
Steel, stainless steel and aluminium.

Version:
Steel galvanized and blue passivated.
Stainless steel electropolished or blasted.
Aluminium natural tone anodized.

Sample order:
nlm 06240-104

On request:
With external threads.

Order No.	Main material	Version	D	D1	D2	H	H1	T
06240-0902	steel	galvanized and blue passivated	M2	14	8	14	6,7	4
06240-0003	steel	galvanized and blue passivated	M3	18	10	18	8,6	7,5
06240-0104	steel	galvanized and blue passivated	M4	21	12	21	10	10
06240-0105	steel	galvanized and blue passivated	M5	21	12	21	10	12,5
06240-0206	steel	galvanized and blue passivated	M6	25	14	25	12	12
06240-0308	steel	galvanized and blue passivated	M8	33	18	33	16	16
06240-0410	steel	galvanized and blue passivated	M10	40	24	40	18,7	20
06240-902	stainless steel	electropolished	M2	14	8	14	6,7	4
06240-003	stainless steel	electropolished	M3	18	10	18	8,6	7,5
06240-104	stainless steel	electropolished	M4	21	12	21	10	10
06240-105	stainless steel	electropolished	M5	21	12	21	10	12,5
06240-206	stainless steel	electropolished	M6	25	14	25	12	12
06240-308	stainless steel	electropolished	M8	33	18	33	16	16
06240-410	stainless steel	electropolished	M10	40	24	40	18,7	20
06240-1902	aluminium	natural colour anodized	M2	14	8	14	6,7	4
06240-1003	aluminium	natural colour anodized	M3	18	10	18	8,6	7,5
06240-1104	aluminium	natural colour anodized	M4	21	12	21	10	10
06240-1105	aluminium	natural colour anodized	M5	21	12	21	10	12,5
06240-1206	aluminium	natural colour anodized	M6	25	14	25	12	12
06240-1308	aluminium	natural colour anodized	M8	33	18	33	16	16
06240-1410	aluminium	natural colour anodized	M10	40	24	40	18,7	20
06240-2902	stainless steel	blasted	M2	14	8	14	6,7	4
06240-2003	stainless steel	blasted	M3	18	10	18	8,6	7,5
06240-2104	stainless steel	blasted	M4	21	12	21	10	10
06240-2105	stainless steel	blasted	M5	21	12	21	10	12,5
06240-2206	stainless steel	blasted	M6	25	14	25	12	12
06240-2308	stainless steel	blasted	M8	33	18	33	16	16
06240-2410	stainless steel	blasted	M10	40	24	40	18,7	20

Mushroom knobs

internal thread

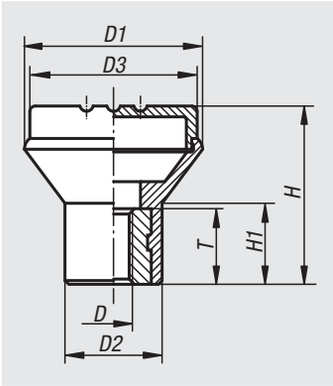

Material:
Thermoplastic, black grey.
Bush steel 5.8 or
stainless steel 1.4305.

Version:
Blue passivated steel or bright stainless steel.

Sample order:
nlm 06241-046 (cap colour traffic red)

Note:
Δ Add the desired cap colour here. No colour code is required for black grey caps.

black grey	light grey Δ = 5	traffic red Δ = 6	bright yellow Δ = 7
RAL 7021	RAL 7035	RAL 3020	RAL 1021

Order No. steel	Order No. stainless steel	Size	D	D1	D2	D3	H	H1	T
06241-04Δ	**06241-004Δ**	1	M4	21	12	19	21	10	10
06241-05Δ	**06241-005Δ**	1	M5	21	12	19	21	10	10
06241-06Δ	**06241-006Δ**	2	M6	25	14	23	25	12	10
06241-08Δ	**06241-008Δ**	3	M8	33	19	31	33	15	14

Mushroom knobs antistatic

internal thread

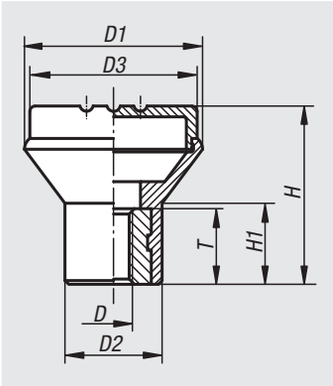

Material:
Thermoplastic, graphite black.
Bush steel 5.8.

Version:
Bush blue passivated

Sample order:
nlm 06241-110524

Application:
Sensitive electrical or electronic equipment, components and devices (ESD sensitive elements) may be damaged or destroyed by electrostatic discharges (ESD) in the immediate vicinity.
Electrostatic discharges can come from people or through handling ESD sensitive components (e.g. during production, assembly, transport, storage etc).
Electrically conductive products which conform to DIN EN 61340-5-1 are essential within electronic environments to prevent an electrostatic discharge.
These products can be used for ESD applications or in ESD protection areas (EPA) in accordance with DIN EN 61340-5-1.
The yellow ESD logo is printed on the side of the product to clearly identify it.

Safety:
These ESD products can also be used for devices, components and protection systems in areas with high risk of explosion.
Use of these ESD products prevents the occurrence of electrostatic spark discharges, eliminating the potential ignition of gases and dusts which could lead to explosions in enclosed spaces.
Manufacturers and operators must use and conform to ATEX directives for the protection of persons working in areas with high risk of explosion.
These ESD products are certified by TÜV-Süd in relation to their electrical discharge capability.

Target groups:
Device manufacturers required to conform to ATEX product directive 2014/34/EU.
Operators required to conform to ATEX worker protection directive 1999/92/EC.

Order No.	Main colour	Size	D	D1	D2	D3	H	H1	T
06241-110524	graphite black RAL 9011	1	M5	21	12	19	21	10	10

Mushroom knobs

external thread

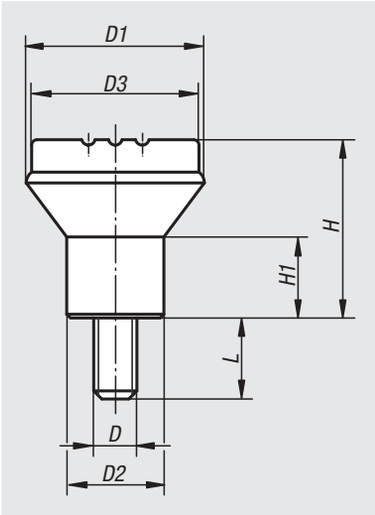

Material:
Thermoplastic, black grey.
Screw steel 5.8 or
stainless steel 1.4305.

Version:
Blue passivated steel or
bright stainless steel.

Sample order:
nlm 06242-046X10
(cap colour traffic red, include length L)

Note:
Δ Add the desired cap colour here. No colour code is required for black grey caps.

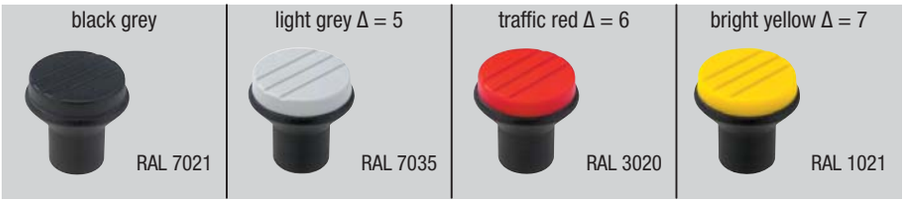

Order No. steel	Order No. stainless steel	Size	D	D1	D2	D3	H	H1	L
06242-04ΔX10	**06242-004ΔX10**	1	M4	21	12	19	21	10	10
06242-05ΔX10	**06242-005ΔX10**	1	M5	21	12	19	21	10	10
06242-06ΔX15	**06242-006ΔX15**	2	M6	25	14	23	25	12	15
06242-08ΔX15	**06242-008ΔX15**	3	M8	33	19	31	33	15	15

Mushroom knobs antistatic

external thread

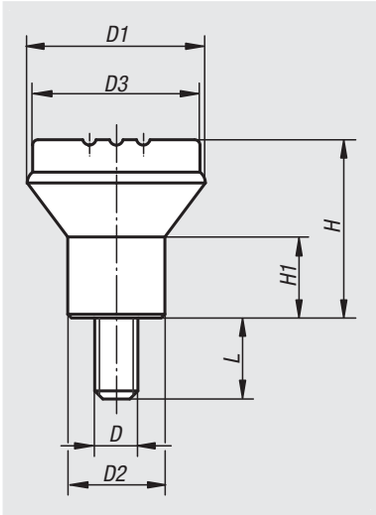

Material:
Thermoplastic, graphite black.
Threaded pin steel 5.8.

Version:
Screw blue passivated.

Sample order:
nlm 06242-110524X10

Application:
Sensitive electrical or electronic equipment, components and devices (ESD sensitive elements) may be damaged or destroyed by electrostatic discharges (ESD) in the immediate vicinity.
Electrostatic discharges can come from people or through handling ESD sensitive components (e.g. during production, assembly, transport, storage etc).
Electrically conductive products which conform to DIN EN 61340-5-1 are essential within electronic environments to prevent an electrostatic discharge.
These products can be used for ESD applications or in ESD protection areas (EPA) in accordance with DIN EN 61340-5-1.
The yellow ESD logo is printed on the side of the product to clearly identify it.

Safety:
These ESD products can also be used for devices, components and protection systems in areas with high risk of explosion.
Use of these ESD products prevents the occurrence of electrostatic spark discharges, eliminating the potential ignition of gases and dusts which could lead to explosions in enclosed spaces.
Manufacturers and operators must use and conform to ATEX directives for the protection of persons working in areas with high risk of explosion.
These ESD products are certified by TÜV-Süd in relation to their electrical discharge capability.

Target groups:
Device manufacturers required to conform to ATEX product directive 2014/34/EU.
Operators required to conform to ATEX worker protection directive 1999/92/EC.

Order No.	Main colour	Size	D	D1	D2	D3	H	H1	L
06242-110524X10	graphite black RAL 9011	1	M5	21	12	19	21	10	10

Spherical knobs

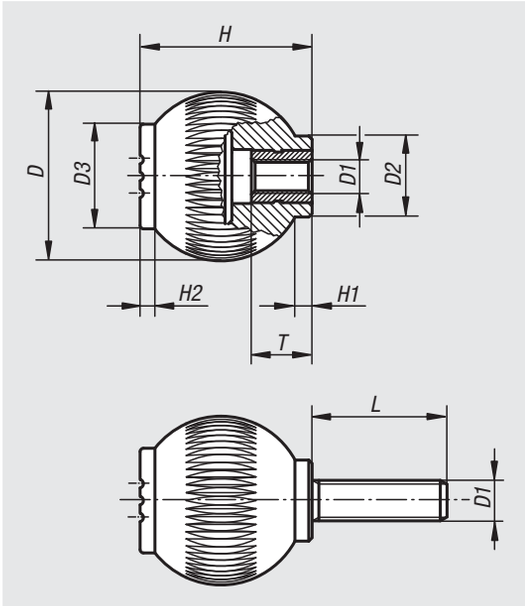

Material:
Thermoplastic, black grey.
Bush and screw steel 5.8 or stainless steel 1.4305.

Version:
Blue passivated steel or bright stainless steel.

Sample order:
nlm 06245-1066X15
(cap colour traffic red; include length L)

Note:
Δ Add the desired cap colour here. No colour code is required for black grey caps.

Order No. steel	Order No. stainless steel	Size	D	D1	D2	D3	H	H1	H2	T
06245-106Δ	**06245-0106Δ**	1	25	M6	12	17	25	3	2	10
06245-208Δ	**06245-0208Δ**	2	32	M8	15,5	19	33	3,5	2,6	14
06245-310Δ	**06245-0310Δ**	3	40	M10	19	23	41,5	4	3	14
06245-410Δ	**06245-0410Δ**	4	50	M10	24	31	51	5,5	4,5	14
06245-412Δ	**06245-0412Δ**	4	50	M12	24	31	51	5,5	4,5	18

Order No. steel	Order No. stainless steel	Size	D	D1	D2	D3	H	H1	H2	L
06245-106ΔX	**06245-0106ΔX**	1	25	M6	12	17	25	3	2	15/20/25/30
06245-208ΔX	**06245-0208ΔX**	2	32	M8	15,5	19	33	3,5	2,6	20/25/30/40
06245-310ΔX	**06245-0310ΔX**	3	40	M10	19	23	41,5	4	3	20/30/40
06245-410ΔX	**06245-0410ΔX**	4	50	M10	24	31	51	5,5	4,5	20/30/40
06245-412ΔX	**06245-0412ΔX**	4	50	M12	24	31	51	5,5	4,5	20/30/40

Spherical knobs

revolving

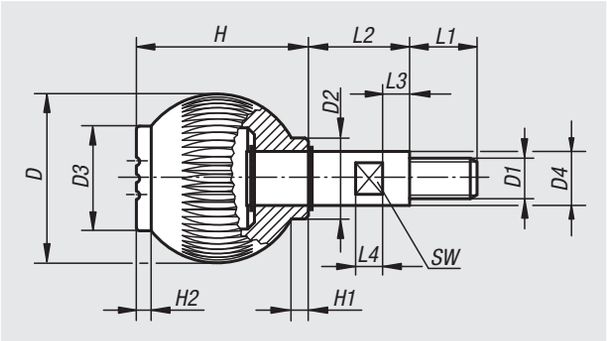

Material:
Thermoplastic, black grey.
Axis steel 5.8 or stainless steel 1.4305.

Version:
Blue passivated steel or bright stainless steel.
Circlips galvanized, including stainless steel version.

Sample order:
nlm 06246-1066 (cap colour traffic red)

Note:
Δ Add the desired cap colour here.
No colour code is required for black grey caps.

Order No. steel	Order No. stainless steel	Size	D	D1	D2	D3	D4	H	H1	H2	L1	L2	L3	L4	SW
06246-106Δ	**06246-0106Δ**	1	25	M6	12	17	8	25	3	2	10	15	5	5	7
06246-208Δ	**06246-0208Δ**	2	32	M8	15,5	19	10	33	3,5	2,6	12	20	6	6	8
06246-310Δ	**06246-0310Δ**	3	40	M10	19	23	13	41,5	4	3	15	25	7	10	10
06246-412Δ	**06246-0412Δ**	4	50	M12	24	31	16	51	5,5	4,5	20	30	8	8	13

Ball knobs

thermoplastic DIN 319 enhanced

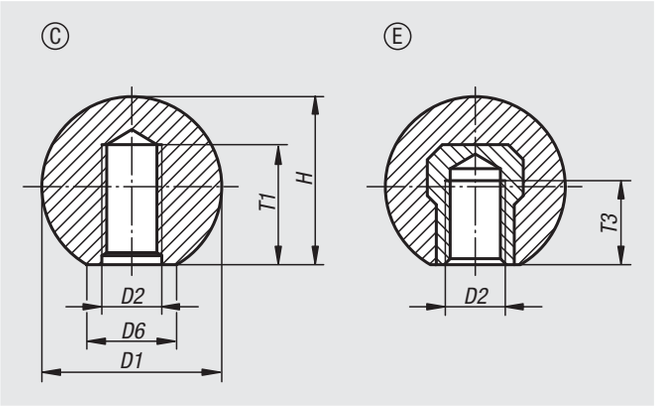

Material:
Black thermoplastic.
Bush steel.

Version:
Steel galvanized.

Sample order:
nlm 06247-11604

On request:
Other colours.

Drawing reference:
Form C: plastic thread
Form E: tapped bush

Order No.	Form	D1	D2	D6	H	T1 min.	T3 min.
06247-11604	C	16	M4	8	15	6	-
06247-11605	C	16	M5	8	15	7,5	-
06247-12005	C	20	M5	12	18	7,5	-
06247-12006	C	20	M6	12	18	9	-
06247-12506	C	25	M6	15	22,5	9	-
06247-12508	C	25	M8	15	22,5	12	-
06247-13208	C	32	M8	18	29	12	-
06247-13210	C	32	M10	18	29	15	-
06247-22005	E	20	M5	12	18	-	7,5
06247-22006	E	20	M6	12	18	-	7,5
06247-22506	E	25	M6	15	22,5	-	9
06247-22508	E	25	M8	15	22,5	-	9
06247-23208	E	32	M8	18	29	-	12
06247-23210	E	32	M10	18	29	-	12

Ball knobs

stainless steel or aluminium DIN 319

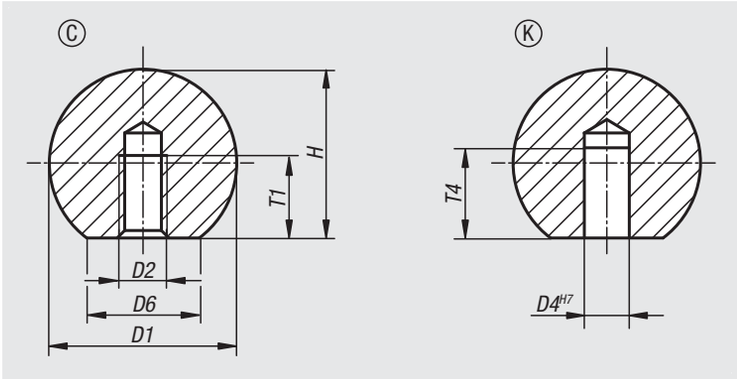

Material:
Stainless steel 1.4305 or aluminium.

Version:
Polished.

Sample order:
nlm 06247-116043

Drawing reference:
Form C: thread
Form K: hole

Order No.	Form	Main material	D1	D2	D6	H	T1 min.
06247-116042	C	stainless steel	16	M4	8	15	7,2
06247-120052	C	stainless steel	20	M5	12	18	9,1
06247-125062	C	stainless steel	25	M6	15	22,5	11
06247-132082	C	stainless steel	32	M8	18	29	14,5
06247-140102	C	stainless steel	40	M10	22	37	18
06247-150122	C	stainless steel	50	M12	28	46	21
06247-116043	C	aluminium	16	M4	8	15	7,2
06247-120053	C	aluminium	20	M5	12	18	9,1
06247-125063	C	aluminium	25	M6	15	22,5	11
06247-132083	C	aluminium	32	M8	18	29	14,5
06247-140103	C	aluminium	40	M10	22	37	18
06247-150123	C	aluminium	50	M12	28	46	21

Order No.	Form	Main material	D1	D4	D6	H	T4 min.
06247-316042	K	stainless steel	16	6	8	15	10
06247-320052	K	stainless steel	20	8	12	18	12
06247-325062	K	stainless steel	25	10	15	22,5	16
06247-332082	K	stainless steel	32	12	18	29	20
06247-340102	K	stainless steel	40	16	22	37	25
06247-350122	K	stainless steel	50	20	28	46	32
06247-316043	K	aluminium	16	6	8	15	10
06247-320053	K	aluminium	20	8	12	18	12
06247-325063	K	aluminium	25	10	15	22,5	16
06247-332083	K	aluminium	32	12	18	29	20
06247-340103	K	aluminium	40	16	22	37	25
06247-350123	K	aluminium	50	20	28	46	32

Ball knobs smooth

DIN 319 enhanced

Material:
Black Duroplast PF 31.
Bush galvanized steel.

Version:
High-gloss polished.

Sample order:
nlm 06250-11604

Note:
Assembly Form L: The ball knobs are mounted firmly by tapping a hammer lightly. Please only use a rubber or plastic hammer, with a weight up to 200 g!

The version 06250-21604 has a brass bush.
The versions 06250-23008, 06250-23508 and 06250-24008 have copper-plated steel bushes.

On request:
* These versions are available from stock in dark red at extra charge.

Shank tolerance:
Ball knobs with press-fit sleeve can be mounted on standard shafts with tolerance h9. The supplied press-fit sleeve assures a firm and reliable fit.

Drawing reference:
Form C: moulded thread
Form E: tapped bush
Form L: press-fit sleeve
Form M: tapered hole

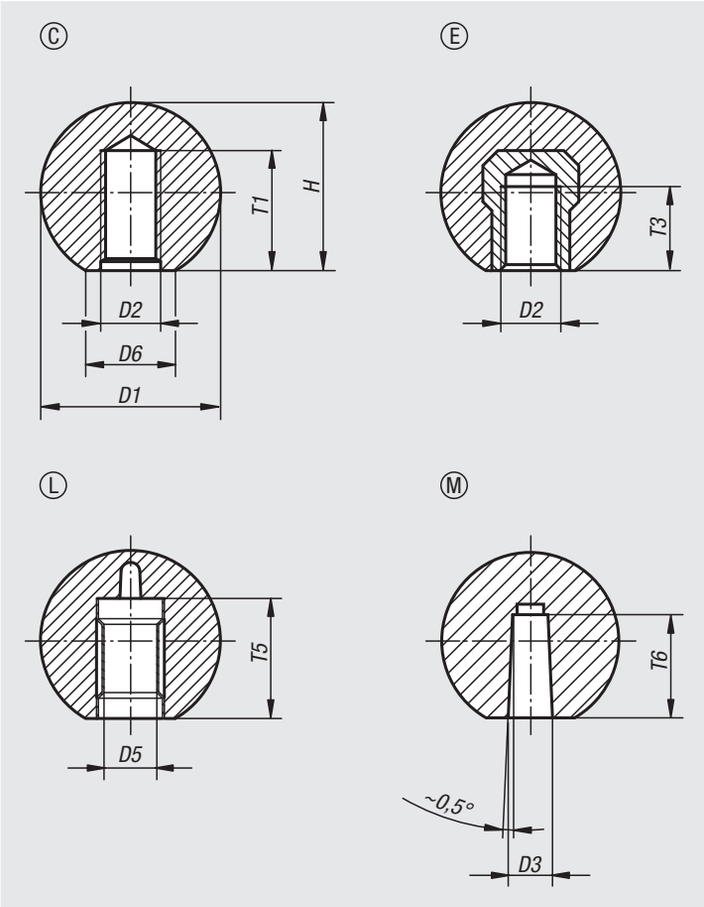

Order No.	Form	D1	D2	D6	H	T1 min.
06250-11604	C	16	M4	8	15	6
06250-11605	C	16	M5	8	15	7,5
06250-11606	C	16	M6	8	15	9
06250-12005*	C	20	M5	12	18	7,5
06250-12006	C	20	M6	12	18	9
06250-12506*	C	25	M6	15	23	9
06250-12508	C	25	M8	15	23	12
06250-13008*	C	30	M8	16	28	12
06250-13208*	C	32	M8	18	29	12
06250-13210	C	32	M10	18	29	15
06250-13508	C	36	M8	17	33	18
06250-13510*	C	36	M10	17	33	15
06250-14008	C	40	M8	20	37,5	12
06250-14010*	C	40	M10	20	37,5	15
06250-14012	C	40	M12	20	37,5	18
06250-14510	C	45	M10	20	43	15
06250-14512	C	45	M12	20	43	18
06250-15010	C	50	M10	22	48	15
06250-15012*	C	50	M12	28	48	18

Ball knobs smooth

DIN 319 enhanced

Order No.	Form	D1	D2	D6	H	T3 min.
06250-21604	E	16	M4	8	15	6
06250-22005*	E	20	M5	12	18	7,5
06250-22006	E	20	M6	12	18	9
06250-22506*	E	25	M6	15	23	9
06250-22508	E	25	M8	15	23	12
06250-23008*	E	30	M8	16	28	12
06250-23208	E	32	M8	18	29	12
06250-23210	E	32	M10	18	29	15
06250-23508	E	36	M8	17	33	14
06250-23510	E	36	M10	17	33	14
06250-24008	E	40	M8	20	37,5	14
06250-24010*	E	40	M10	20	37,5	15
06250-24012	E	40	M12	20	37,5	18
06250-24510	E	45	M10	20	43	22
06250-24512	E	45	M12	20	43	21
06250-25010	E	50	M10	22	48	15
06250-25012*	E	50	M12	28	48	18

Order No.	Form	D1	D5	D6	H	T5
06250-42005	L	20	5	12	18	13
06250-42506	L	25	6	15	23	16
06250-42508	L	25	8	15	23	15
06250-43208	L	32	8	18	29	15
06250-43210	L	32	10	18	29	20
06250-44010	L	40	10	20	37,5	20
06250-44012	L	40	12	20	37,5	23
06250-45012	L	50	12	28	48	20

Order No.	Form	D1	D3	D6	H	T6
06250-31604	M	16	4	8	15	9
06250-32005	M	20	5	12	18	12
06250-32506	M	25	6	15	23	15
06250-32508	M	25	8	15	23	15
06250-33208	M	32	8	18	29	15
06250-33210	M	32	10	18	29	15
06250-34010	M	40	10	20	37,5	20
06250-34012	M	40	12	20	37,5	20
06250-35012	M	50	12	28	48	22

06251

Tapered knobs

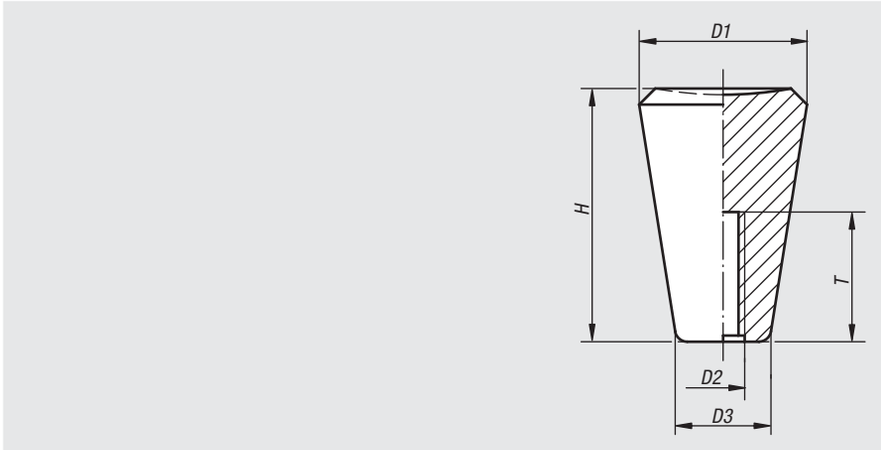

Material:
Black Duroplast PF 31

Version:
Moulded thread.

Sample order:
nlm 06251-06

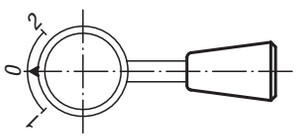

Order No.	D1	D2	D3	H	T min.
06251-05	20	M5	12	30	18
06251-061	20	M6	12	30	18
06251-06	25	M6	15	38	18
06251-081	25	M8	15	38	18
06251-08	30	M8	18	46	18
06251-101	30	M10	18	46	21
06251-10	35	M10	21	53	21
06251-12	35	M12	21	53	21

06252

Conical knobs

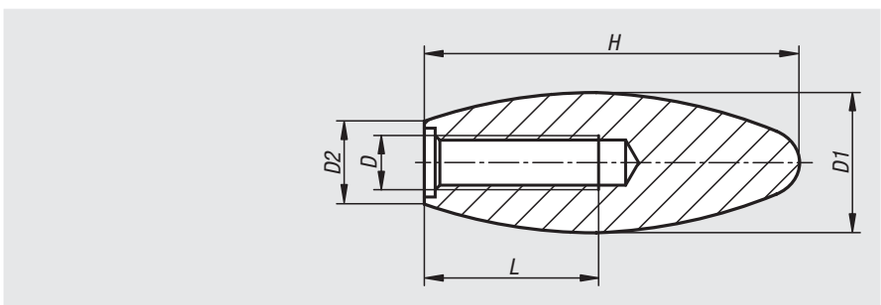

Material:
Black Duroplast PF 31

Version:
High-gloss polished.

Sample order:
nlm 06252-120

Order No.	D	D1	D2	H	L min.
06252-050	M5	14	7	34	25
06252-060	M6	23	14	60	17
06252-080	M8	22	14	60	25
06252-081	M8	26	16	70	19
06252-100	M10	27	15,5	70	25
06252-101	M10	35	22	85	25
06252-120	M12	27	15,5	70	25
06252-121	M12	35	22	85	25
06252-160	M16	35	22	85	30

Five lobe grips

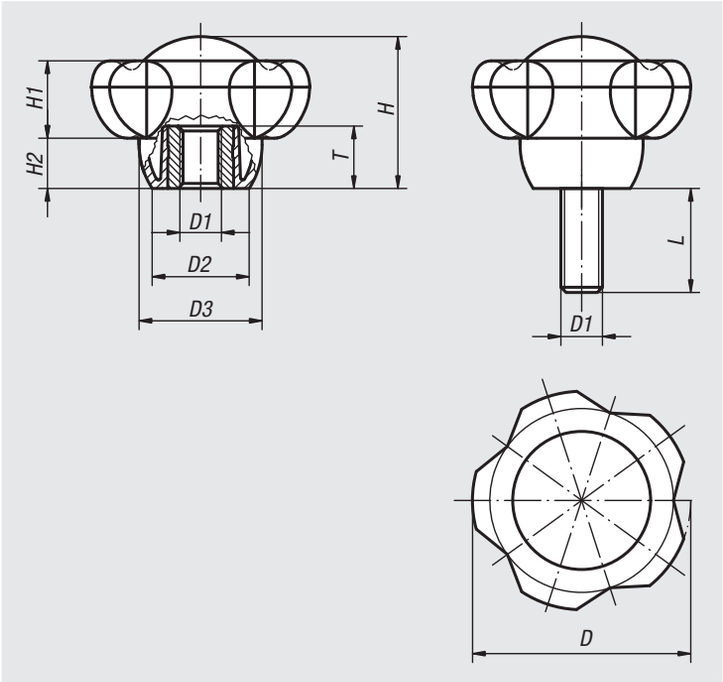

Material:
Thermoplastic, black grey.
Bush and screw steel 5.8 or stainless steel 1.4305.

Version:
Blue passivated steel or bright stainless steel.

Sample order:
nlm 06253-50106X30
(cap colour traffic red; include length L)

Note:
The screw lengths 15, 35 and 45 are not available in stainless steel.
Δ Add the desired cap colour here. No colour code is required for black grey caps.

black grey	light grey Δ = 5	traffic red Δ = 6	bright yellow Δ = 7
RAL 7021	RAL 7035	RAL 3020	RAL 1021

Order No. steel	Order No. stainless steel	D	D1	D2	D3	H	H1	H2	T
06253-5008Δ	**06253-50081Δ**	50	M8	22,2	28,2	34,8	17,8	11,5	14
06253-5010Δ	**06253-50101Δ**	50	M10	22,2	28,2	34,8	17,8	11,5	14
06253-5012Δ	**06253-50121Δ**	50	M12	22,2	28,2	34,8	17,8	11,5	18
06253-6310Δ	**06253-63101Δ**	63	M10	28	35,5	44	22,5	14,5	14
06253-6312Δ	**06253-63121Δ**	63	M12	28	35,5	44	22,5	14,5	18
06253-6316Δ	-	63	M16	28	35,5	44	22,5	14,5	18

Order No. steel	Order No. stainless steel	D	D1	D2	D3	H	H1	H2	L
06253-5010ΔX	**06253-50101ΔX**	50	M10	22,2	28,2	34,8	17,8	11,5	15/20/25/30/35/40/45/50/60
06253-5012ΔX	-	50	M12	22,2	28,2	34,8	17,8	11,5	15/20/25/30/35/40/45/50/60
06253-6310ΔX	**06253-63101ΔX**	63	M10	28	35,5	44	22,5	14,5	20/25/30/35/40/45/50/60
06253-6312ΔX	-	63	M12	28	35,5	44	22,5	14,5	20/25/30/35/40/45/50/60

Handwheels 2-spoke

plastic

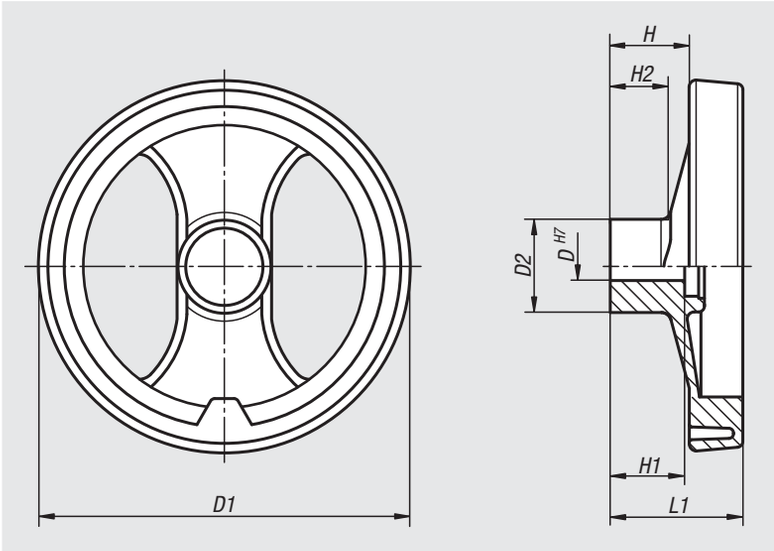

Material:
Handwheel reinforced and stabilised polyamide.
Centre plugs polyamide.
Tapped bush steel.

Version:
Handwheel oil and grease resistant, black (RAL 9011), satin finish.
Centre plugs, grey (RAL 7035 cod. 13).
Through bush black oxidised.

Sample order:
nlm 06255-0080X08

On request:
Other cap colours,
special versions.

DIN 6885-1

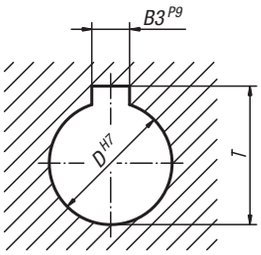

Order No. without slot	Order No. with slot	D	D1	D2	H	H1	H2	L1	B3	T
06255-0080X08	**06255-1080X08**	8	80	24,5	20	20	16	34	-/2	-/9
06255-0080X10	**06255-1080X10**	10	80	24,5	20	20	16	34	-/3	-/11,4
06255-0100X10	**06255-1100X10**	10	99	28	25,5	24	20	42	-/3	-/11,4
06255-0100X12	**06255-1100X12**	12	99	28	25,5	24	20	42	-/4	-/13,8
06255-0130X12	**06255-1130X12**	12	129	32	30	24	21	50	-/4	-/13,8
06255-0130X14	**06255-1130X14**	14	129	32	30	24	21	50	-/5	-/16,3
06255-0160X14	**06255-1160X14**	14	159	40	33	32	22	57	-/5	-/16,3
06255-0160X16	**06255-1160X16**	16	159	40	33	32	22	57	-/5	-/18,3
06255-0200X16	**06255-1200X16**	16	198	51	31	32	17,5	60	-/5	-/18,3
06255-0200X20	**06255-1200X20**	20	198	51	31	32	17,5	60	-/6	-/22,8
06255-0250X20	**06255-1250X20**	20	252	55,5	39,5	36	24	71	-/6	-/22,8
06255-0250X24	**06255-1250X24**	24	252	55,5	39,5	36	24	71	-/8	-/27,3
06255-0345X20	**06255-1345X20**	20	346	67,5	42	32	24	79	-/6	-/22,8

Handwheels 2-spoke

plastic, with revolving grip

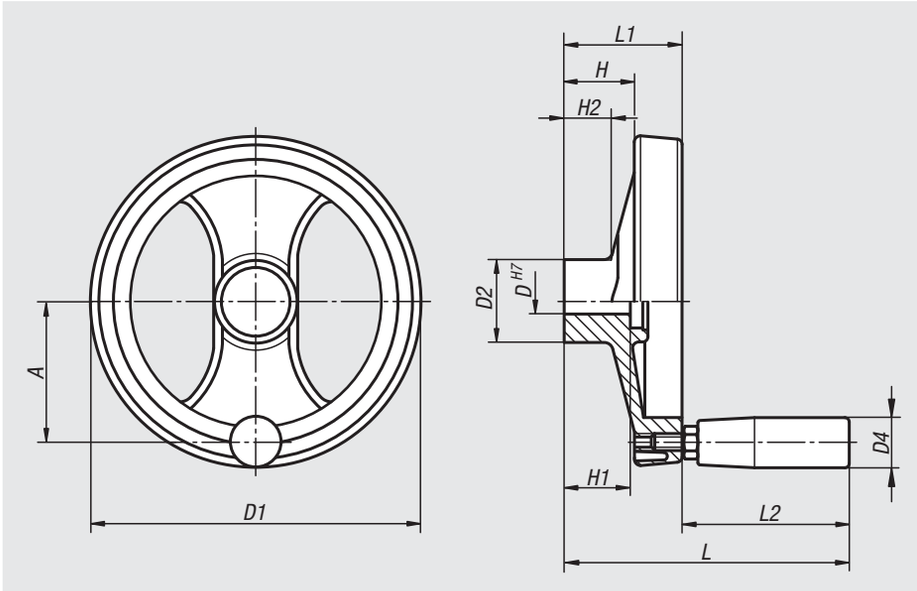

Material:
Handwheel reinforced and stabilised polyamide.
Centre plugs polyamide.
Tapped bush steel.
Tapped insert for cylinder grip brass.

Version:
Handwheel oil and grease resistant, black (RAL 9011), satin finish.
Centre plugs, grey (RAL 7035 cod. 13).
Through bush black oxidised.

Sample order:
nlm 06255-4080X08

On request:
Other cap colours,
special versions.

DIN 6885-1

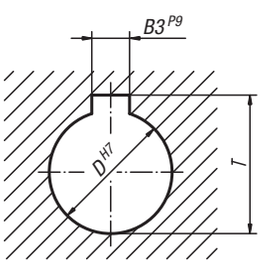

Order No. without slot	Order No. with slot	D	D1	D2	D4	H	H1	H2	A	L	L1	L2	B3	T
06255-4080X08	06255-5080X08	8	80	24,5	20	20	20	16	30	85	34	51	-/2	-/9
06255-4080X10	06255-5080X10	10	80	24,5	20	20	20	16	30	85	34	51	-/3	-/11,4
06255-4100X10	06255-5100X10	10	99	28	20	25,5	24	20	38	93	43	51	-/3	-/11,4
06255-4100X12	06255-5100X12	12	99	28	20	25,5	24	20	38	93	43	51	-/4	-/13,8
06255-4130X12	06255-5130X12	12	129	32	23	30	24	21	55	112	50	62	-/4	-/13,8
06255-4130X14	06255-5130X14	14	129	32	23	30	24	21	55	112	50	62	-/5	-/16,3
06255-4160X14	06255-5160X14	14	159	40	23	33	32	22	66	119	57	62	-/5	-/16,3
06255-4160X16	06255-5160X16	16	159	40	23	33	32	22	66	119	57	62	-/5	-/18,3
06255-4200X16	06255-5200X16	16	198	51	26	31	32	17,5	82	141	60	81	-/5	-/18,3
06255-4200X20	06255-5200X20	20	198	51	26	31	32	17,5	82	141	60	81	-/6	-/22,8
06255-4250X20	06255-5250X20	20	252	55,5	27	39,5	36	24	113	163	71	92	-/6	-/22,8
06255-4250X24	06255-5250X24	24	252	55,5	27	39,5	36	24	113	163	71	92	-/8	-/27,3
06255-4345X20	06255-5345X20	20	346	67,5	27	42	32	24	146	171	79	92	-/6	-/22,8

Handwheels 2-spoke

plastic, with folding grip

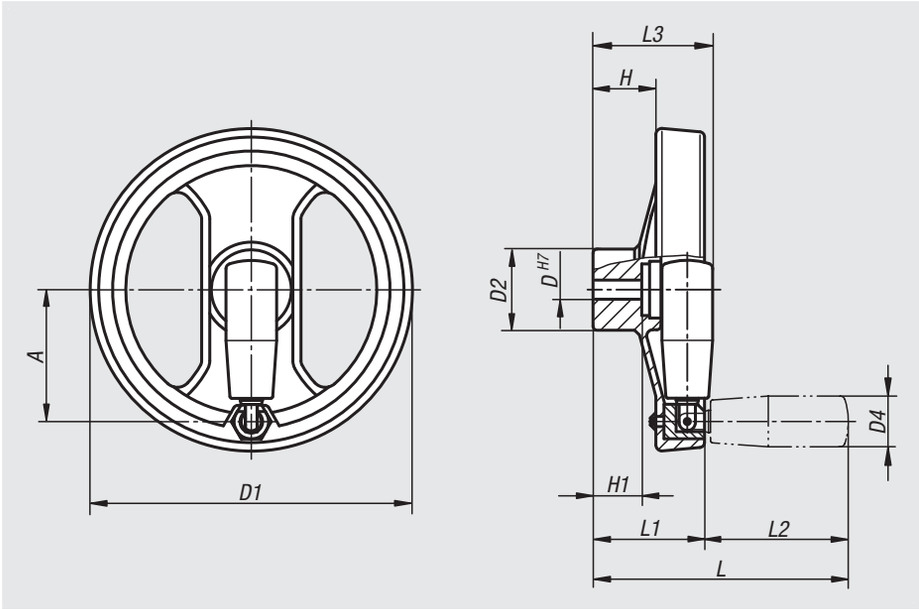

Material:
Handwheel reinforced and stabilised polyamide.
Centre plugs polyamide.
Tapped bush and insert for cylinder grip steel.

Version:
Handwheel oil and grease resistant, black (RAL 9011), satin finish.
Centre plugs, grey (RAL 7035 cod. 13).
Tapped bush and insert for folding grip black oxidised.

Sample order:
nlm 06255-6130X12

On request:
Other cap colours,
special versions.

DIN 6885-1

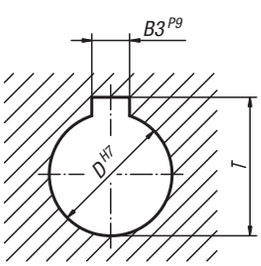

Order No. without slot	Order No. with slot	D	D1	D2	D4	A	H	H1	L	L1	L2	L3	B3	T
06255-6130X12	**06255-7130X12**	12	129	32	20	51	29	20	111	52	59	53	-/4	-/13,8
06255-6130X14	**06255-7130X14**	14	129	32	20	51	29	20	111	52	59	53	-/5	-/16,3
06255-6160X14	**06255-7160X14**	14	159	40	25	65	31	24	126	55	71	59	-/5	-/16,3
06255-6160X16	**06255-7160X16**	16	159	40	25	65	31	24	126	55	71	59	-/5	-/18,3
06255-6200X16	**06255-7200X16**	16	200	54,5	27	80	33	28	160	69	91	69	-/5	-/18,3
06255-6200X20	**06255-7200X20**	20	200	54,5	27	80	33	28	160	69	91	69	-/6	-/22,8
06255-6345X20	**06255-7345X20**	20	346	67,5	27	148	43,5	32	144	80	91	80	-/6	-/22,8

Handwheels

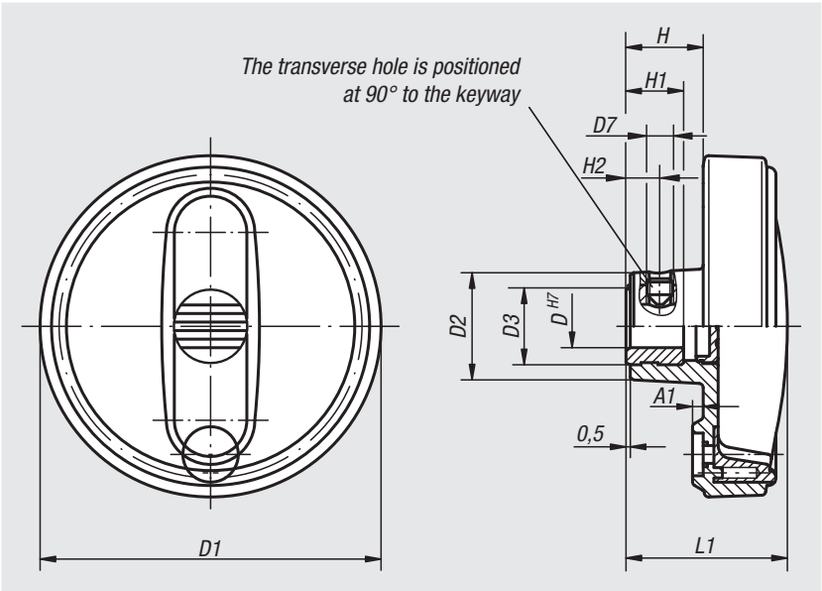

Material:
Black grey thermoplastic.

Version:
Steel parts black oxidised.

Sample order:
nlm 06262-108008

Note:
The hub cap is supplied loose.
The handwheels can be secured using a transverse pin or by parallel key connection together with a DIN 6912 socket head screw and a DIN 7349 washer.
Versions with transverse bore are fastened using the ISO 4027 (DIN 914) grub screws.

DIN 6885-1

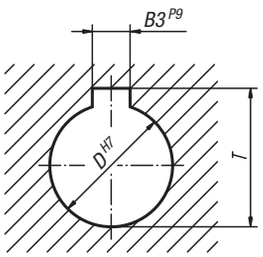

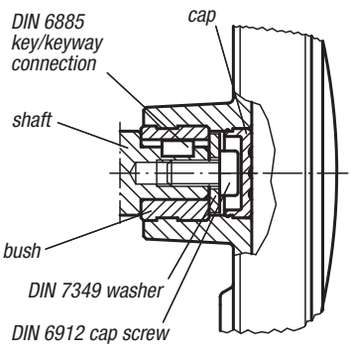

Order No. without slot	Order No. with slot	Size	D	D1	D2	D3	A1	H	H1	L1	B3	T
06262-108008	**06262-10800802**	1	8	80	25	19	2,5	17,5	13	37,5	-/2	-/9
06262-108010	**06262-10801003**	1	10	80	25	19	2,5	17,5	13	37,5	-/3	-/11,4
06262-108012	**06262-10801204**	1	12	80	25	19	2,5	17,5	13	37,5	-/4	-/13,8
06262-210010	**06262-21001003**	2	10	100	28	19	3	20	13	44	-/3	-/11,4
06262-210012	**06262-21001204**	2	12	100	28	19	3	20	13	44	-/4	-/13,8
06262-312512	**06262-31251204**	3	12	125	35	25	4	23,5	18,5	53	-/4	-/13,8
06262-312514	**06262-31251405**	3	14	125	35	25	4	23,5	18,5	53	-/5	-/16,3
06262-312516	**06262-31251605**	3	16	125	35	25	4	23,5	18,5	53	-/5	-/18,3
06262-416014	**06262-41601405**	4	14	160	45	25	5,6	28	18,5	64,5	-/5	-/16,3
06262-416016	**06262-41601605**	4	16	160	45	25	5,6	28	18,5	64,5	-/5	-/18,3

Order No. without slot	Order No. with slot	Size	D	D1	D2	D3	D7	A1	H	H1	H2	L1	B3	T
06262-1080086	**06262-108008026**	1	8	80	25	19	M6	2,5	17,5	13	7,5	37,5	-/2	-/9
06262-1080106	**06262-108010036**	1	10	80	25	19	M6	2,5	17,5	13	7,5	37,5	-/3	-/11,4
06262-1080126	**06262-108012046**	1	12	80	25	19	M6	2,5	17,5	13	7,5	37,5	-/4	-/13,8
06262-2100106	**06262-210010036**	2	10	100	28	19	M6	3	20	13	7,5	44	-/3	-/11,4
06262-2100126	**06262-210012046**	2	12	100	28	19	M6	3	20	13	7,5	44	-/4	-/13,8
06262-3125126	**06262-312512046**	3	12	125	35	25	M6	4	23,5	18,5	7,5	53	-/4	-/13,8
06262-3125146	**06262-312514056**	3	14	125	35	25	M6	4	23,5	18,5	7,5	53	-/5	-/16,3
06262-3125166	**06262-312516056**	3	16	125	35	25	M6	4	23,5	18,5	7,5	53	-/5	-/18,3
06262-4160146	**06262-416014056**	4	14	160	45	25	M6	5,6	28	18,5	7,5	64,5	-/5	-/16,3
06262-4160166	**06262-416016056**	4	16	160	45	25	M6	5,6	28	18,5	7,5	64,5	-/5	-/18,3

Handwheels

with revolving grip

Material:
Black grey thermoplastic.

Version:
Steel parts black oxidised.

Sample order:
nlm 06263-108008

Note:
The hub cover and the revolving cylinder grip are supplied unassembled. To assemble, screw the grip into the tapped hole.
The handwheels can be secured using a transverse pin or by parallel key connection together with a DIN 6912 socket head screw and a DIN 7349 washer.
Versions with transverse bore are secured using the ISO 4026 (DIN 913) grub screw.
For assembly example, see 06262.

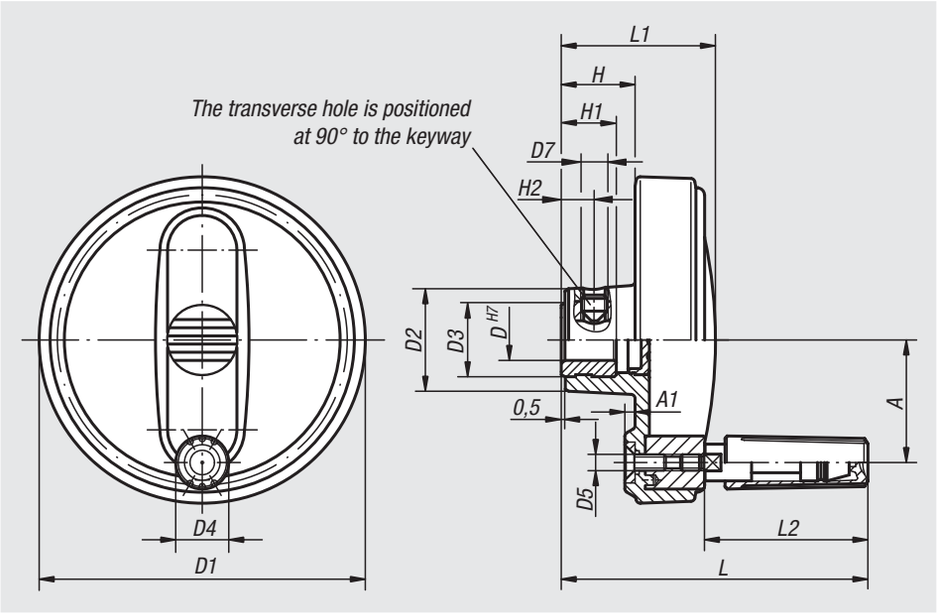

DIN 6885-1

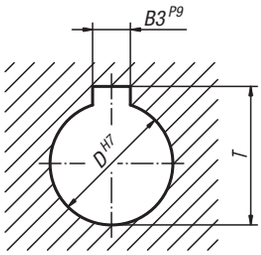

Order No. without slot	Order No. with slot	Size	D	D1	D2	D3	D4	D5	A	A1	H	H1	L	L1	L2	B3	T
06263-108008	**06263-10800802**	1	8	80	25	19	13	M4	30	2,5	17,5	13	75	37,5	40	-/2	-/9
06263-108010	**06263-10801003**	1	10	80	25	19	13	M4	30	2,5	17,5	13	75	37,5	40	-/3	-/11,4
06263-108012	**06263-10801204**	1	12	80	25	19	13	M4	30	2,5	17,5	13	75	37,5	40	-/4	-/13,8
06263-210010	**06263-21001003**	2	10	100	28	19	16	M5	38	3	20	13	90	44	49,5	-/3	-/11,4
06263-210012	**06263-21001204**	2	12	100	28	19	16	M5	38	3	20	13	90	44	49,5	-/4	-/13,8
06263-312512	**06263-31251204**	3	12	125	35	25	20	M6	47,5	4	23,5	18,5	109	53	60	-/4	-/13,8
06263-312514	**06263-31251405**	3	14	125	35	25	20	M6	47,5	4	23,5	18,5	109	53	60	-/5	-/16,3
06263-312516	**06263-31251605**	3	16	125	35	25	20	M6	47,5	4	23,5	18,5	109	53	60	-/5	-/18,3
06263-416014	**06263-41601405**	4	14	160	45	25	25	M8	62	5,6	28	18,5	144	64,5	83,5	-/5	-/16,3
06263-416016	**06263-41601605**	4	16	160	45	25	25	M8	62	5,6	28	18,5	144	64,5	83,5	-/5	-/18,3

Order No. without slot	Order No. with slot	Size	D	D1	D2	D3	D4	D5	D7	A	A1	H	H1	H2	L	L1	L2	B3	T
06263-1080086	**06263-108008026**	1	8	80	25	19	13	M4	M6	30	2,5	17,5	13	7,5	75	37,5	40	-/2	-/9
06263-1080106	**06263-108010036**	1	10	80	25	19	13	M4	M6	30	2,5	17,5	13	7,5	75	37,5	40	-/3	-/11,4
06263-1080126	**06263-108012046**	1	12	80	25	19	13	M4	M6	30	2,5	17,5	13	7,5	75	37,5	40	-/4	-/13,8
06263-2100106	**06263-210010036**	2	10	100	28	19	16	M5	M6	38	3	20	13	7,5	90	44	49,5	-/3	-/11,4
06263-2100126	**06263-210012046**	2	12	100	28	19	16	M5	M6	38	3	20	13	7,5	90	44	49,5	-/4	-/13,8
06263-3125126	**06263-312512046**	3	12	125	35	25	20	M6	M6	47,5	4	23,5	18,5	7,5	109	53	60	-/4	-/13,8
06263-3125146	**06263-312514056**	3	14	125	35	25	20	M6	M6	47,5	4	23,5	18,5	7,5	109	53	60	-/5	-/16,3
06263-3125166	**06263-312516056**	3	16	125	35	25	20	M6	M6	47,5	4	23,5	18,5	7,5	109	53	60	-/5	-/18,3
06263-4160146	**06263-416014056**	4	14	160	45	25	25	M8	M6	62	5,6	28	18,5	7,5	144	64,5	83,5	-/5	-/16,3
06263-4160166	**06263-416016056**	4	16	160	45	25	25	M8	M6	62	5,6	28	18,5	7,5	144	64,5	83,5	-/5	-/18,3

Handwheels

with fold-away grip

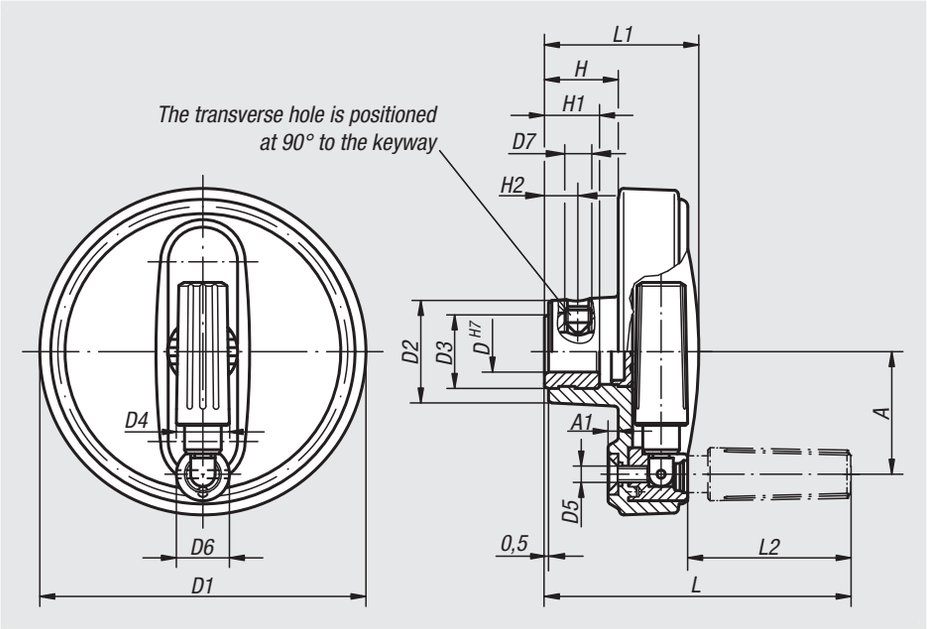

Material:
Black grey thermoplastic.

Version:
Steel parts black oxidised.

Sample order:
nlm 06264-108008

Note:
The hub cover is supplied loose.
The handwheels can be secured using a transverse pin or by parallel key connection together with a DIN 6912 socket head screw and a DIN 7349 washer.
Versions with transverse bore are secured using the ISO 4026 (DIN 913) grub screw.
For assembly example, see 06262.

DIN 6885-1

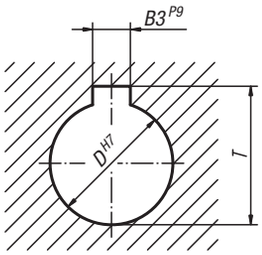

Order No. without slot	Order No. with slot	Size	D	D1	D2	D3	D4	D5	D6	A	A1	H	H1	L	L1	L2	B3	T
06264-108008	06264-10800802	1	8	80	25	19	13	M4	13	30	2,5	17,5	13	75	37,5	40	-/2	-/9
06264-108010	06264-10801003	1	10	80	25	19	13	M4	13	30	2,5	17,5	13	75	37,5	40	-/3	-/11,4
06264-108012	06264-10801204	1	12	80	25	19	13	M4	13	30	2,5	17,5	13	75	37,5	40	-/4	-/13,8
06264-210010	06264-21001003	2	10	100	28	19	16	M5	16	38	3	20	13	90	44	49	-/3	-/11,4
06264-210012	06264-21001204	2	12	100	28	19	16	M5	16	38	3	20	13	90	44	49	-/4	-/13,8
06264-312512	06264-31251204	3	12	125	35	25	20	M6	20	47,5	4	23,5	18,5	109	53	59,5	-/4	-/13,8
06264-312514	06264-31251405	3	14	125	35	25	20	M6	20	47,5	4	23,5	18,5	109	53	59,5	-/5	-/16,3
06264-312516	06264-31251605	3	16	125	35	25	20	M6	20	47,5	4	23,5	18,5	109	53	59,5	-/5	-/18,3
06264-416014	06264-41601405	4	14	160	45	25	25	M8	26	62	5,6	28	18,5	144	64,5	83,5	-/5	-/16,3
06264-416016	06264-41601605	4	16	160	45	25	25	M8	26	62	5,6	28	18,5	144	64,5	83,5	-/5	-/18,3

Order No. without slot	Order No. with slot	Size	D	D1	D2	D3	D4	D5	D6	D7	A	A1	H	H1	H2	L	L1	L2	B3	T
06264-1080086	06264-108008026	1	8	80	25	19	13	M4	13	M6	30	2,5	17,5	13	7,5	75	37,5	40	-/2	-/9
06264-1080106	06264-108010036	1	10	80	25	19	13	M4	13	M6	30	2,5	17,5	13	7,5	75	37,5	40	-/3	-/11,4
06264-1080126	06264-108012046	1	12	80	25	19	13	M4	13	M6	30	2,5	17,5	13	7,5	75	37,5	40	-/4	-/13,8
06264-2100106	06264-210010036	2	10	100	28	19	16	M5	16	M6	38	3	20	13	7,5	90	44	49	-/3	-/11,4
06264-2100126	06264-210012046	2	12	100	28	19	16	M5	16	M6	38	3	20	13	7,5	90	44	49	-/4	-/13,8
06264-3125126	06264-312512046	3	12	125	35	25	20	M6	20	M6	47,5	4	23,5	18,5	7,5	109	53	59,5	-/4	-/13,8
06264-3125146	06264-312514056	3	14	125	35	25	20	M6	20	M6	47,5	4	23,5	18,5	7,5	109	53	59,5	-/5	-/16,3
06264-3125166	06264-312516056	3	16	125	35	25	20	M6	20	M6	47,5	4	23,5	18,5	7,5	109	53	59,5	-/5	-/18,3
06264-4160146	06264-416014056	4	14	160	45	25	25	M8	26	M6	62	5,6	28	18,5	7,5	144	64,5	83,5	-/5	-/16,3
06264-4160166	06264-416016056	4	16	160	45	25	25	M8	26	M6	62	5,6	28	18,5	7,5	144	64,5	83,5	-/5	-/18,3

Handwheels

with safety grip

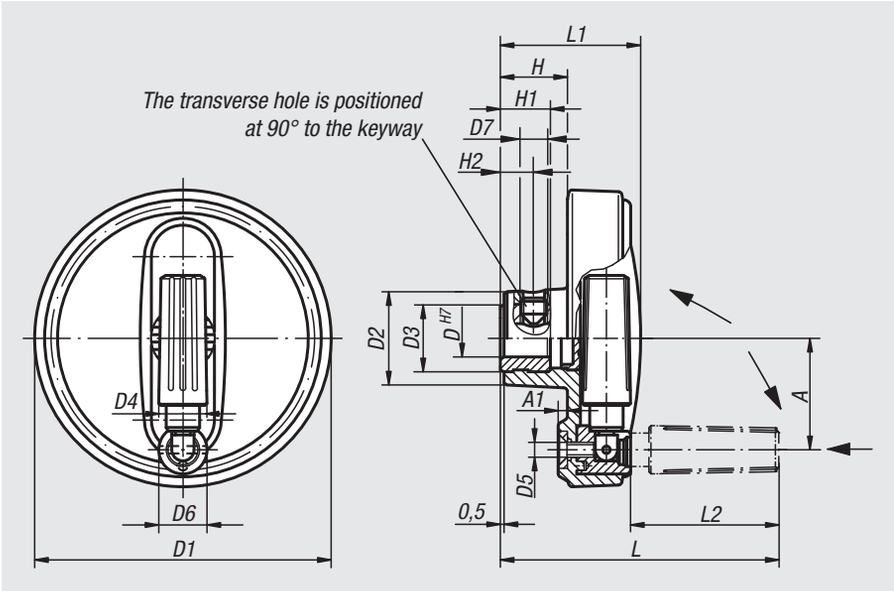

Material:
Black grey thermoplastic.

Version:
Steel parts black oxidised.

Sample order:
nlm 06265-108008

Note:
The hub cover is supplied unassembled.
The handwheels can be secured using a transverse pin or by parallel key connection together with a DIN 6912 socket head screw and a DIN 7349 washer.Two actions must be made to bring the cylindrical safety grip into an operating position:
- Swing the grip out up to the stop (90°).
- Push the grip in an axial direction into the lock position.
The pushed-in position is the most comfortable for cranking. The grip swings back automatically after releasing.
Versions with transverse bore are secured using the ISO 4026 (DIN 913) grub screw.
For assembly example, see 06262.

Handwheels

with safety grip

DIN 6885-1

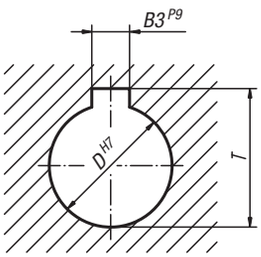

Order No. without slot	Order No. with slot	Size	D	D1	D2	D3	D4	D5	D6	A	A1	H	H1	L	L1	L2	B3	T
06265-108008	**06265-10800802**	1	8	80	25	19	13	M4	13	30	2,5	17,5	13	73	37,5	38	-/2	-/9
06265-108010	**06265-10801003**	1	10	80	25	19	13	M4	13	30	2,5	17,5	13	73	37,5	38	-/3	-/11,4
06265-108012	**06265-10801204**	1	12	80	25	19	13	M4	13	30	2,5	17,5	13	73	37,5	38	-/4	-/13,8
06265-210010	**06265-21001003**	2	10	100	28	19	16	M5	16	38	3	20	13	88,5	44	47,5	-/3	-/11,4
06265-210012	**06265-21001204**	2	12	100	28	19	16	M5	16	38	3	20	13	88,5	44	47,5	-/4	-/13,8
06265-312512	**06265-31251204**	3	12	125	35	25	20	M6	20	47,5	4	23,5	18,5	108	53	58,5	-/4	-/13,8
06265-312514	**06265-31251405**	3	14	125	35	25	20	M6	20	47,5	4	23,5	18,5	108	53	58,5	-/5	-/16,3
06265-312516	**06265-31251605**	3	16	125	35	25	20	M6	20	47,5	4	23,5	18,5	108	53	58,5	-/5	-/18,3
06265-416014	**06265-41601405**	4	14	160	45	25	25	M8	26	62	5,6	28	18,5	142,5	64,5	82	-/5	-/16,3
06265-416016	**06265-41601605**	4	16	160	45	25	25	M8	26	62	5,6	28	18,5	142,5	64,5	82	-/5	-/18,3

Order No. without slot	Order No. with slot	Size	D	D1	D2	D3	D4	D5	D6	D7	A	A1	H	H1	H2	L	L1	L2	B3	T
06265-1080086	**06265-108008026**	1	8	80	25	19	13	M4	13	M6	30	2,5	17,5	13	7,5	73	37,5	38	-/2	-/9
06265-1080106	**06265-108010036**	1	10	80	25	19	13	M4	13	M6	30	2,5	17,5	13	7,5	73	37,5	38	-/3	-/11,4
06265-1080126	**06265-108012046**	1	12	80	25	19	13	M4	13	M6	30	2,5	17,5	13	7,5	73	37,5	38	-/4	-/13,8
06265-2100106	**06265-210010036**	2	10	100	28	19	16	M5	16	M6	38	3	20	13	7,5	88,5	44	47,5	-/3	-/11,4
06265-2100126	**06265-210012046**	2	12	100	28	19	16	M5	16	M6	38	3	20	13	7,5	88,5	44	47,5	-/4	-/13,8
06265-3125126	**06265-312512046**	3	12	125	35	25	20	M6	20	M6	47,5	4	23,5	18,5	7,5	108	53	58,5	-/4	-/13,8
06265-3125146	**06265-312514056**	3	14	125	35	25	20	M6	20	M6	47,5	4	23,5	18,5	7,5	108	53	58,5	-/5	-/16,3
06265-3125166	**06265-312516056**	3	16	125	35	25	20	M6	20	M6	47,5	4	23,5	18,5	7,5	108	53	58,5	-/5	-/18,3
06265-4160146	**06265-416014056**	4	14	160	45	25	25	M8	26	M6	62	5,6	28	18,5	7,5	142,5	64,5	82	-/5	-/16,3
06265-4160166	**06265-416016056**	4	16	160	45	25	25	M8	26	M6	62	5,6	28	18,5	7,5	142,5	64,5	82	-/5	-/18,3

Knurled knobs

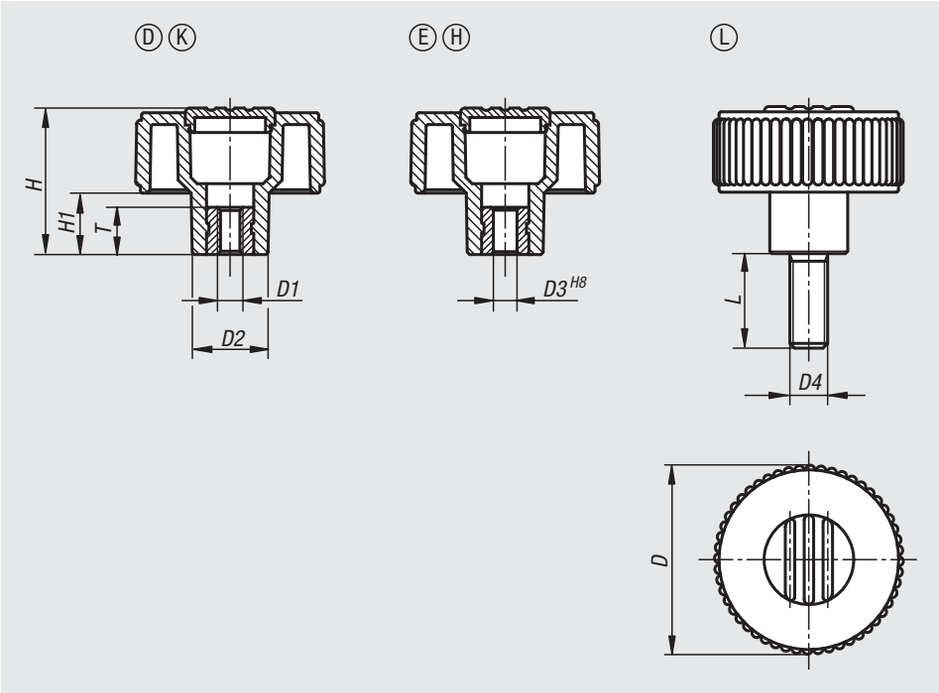

Material:
Thermoplastic, black grey.
Bush or screw steel 5.8.

Version:
Steel blue passivated.

Sample order:
nlm 06266-41067 (wheel cap colour bright yellow)

Note:
Δ Add the desired cap colour here.
No colour code is required for black grey caps.

Drawing reference:
Form D: tapped bush without cap
Form K: tapped bush with cap
Form E: reamed bush without cap
Form H: reamed bush with cap
Form L: external thread

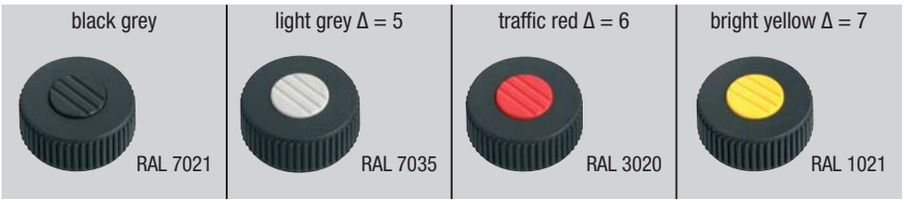

Order No.	Form	Size	D	D1	D2	H	H1	T
06266-1105	D	1	40	M5	16,5	30	13	10
06266-1106	D	1	40	M6	16,5	30	13	10
06266-1108	D	1	40	M8	16,5	30	13	14
06266-1208	D	2	50	M8	18	35	15	14
06266-1210	D	2	50	M10	18	35	15	14
06266-1310	D	3	63	M10	22	40	17	14
06266-1312	D	3	63	M12	22	40	17	18

Knurled knobs

Order No.	Form	Size	D	D1	D2	H	H1	T
06266-2105Δ	K	1	40	M5	16,5	31	13	10
06266-2106Δ	K	1	40	M6	16,5	31	13	10
06266-2108Δ	K	1	40	M8	16,5	31	13	14
06266-2208Δ	K	2	50	M8	18	36	15	14
06266-2210Δ	K	2	50	M10	18	36	15	14
06266-2310Δ	K	3	63	M10	22	41	17	14
06266-2312Δ	K	3	63	M12	22	41	17	18

Order No.	Form	Size	D	D2	D3	H	H1	T
06266-3106	E	1	40	16,5	6	30	13	10
06266-3208	E	2	50	18	8	35	15	14
06266-3310	E	3	63	22	10	40	17	14

Order No.	Form	Size	D	D2	D3	H	H1	T
06266-4106Δ	H	1	40	16,5	6	31	13	10
06266-4208Δ	H	2	50	18	8	36	15	14
06266-4310Δ	H	3	63	22	10	41	17	14

Order No.	Form	Size	D	D2	D4	H	H1	L
06266-5105ΔX	L	1	40	16,5	M5	31	13	10/20/40
06266-5106ΔX	L	1	40	16,5	M6	31	13	10/20/40
06266-5108ΔX	L	1	40	16,5	M8	31	13	15/30/60
06266-5208ΔX	L	2	50	18	M8	36	15	15/30/60
06266-5210ΔX	L	2	50	18	M10	36	15	20/30/60
06266-5310ΔX	L	3	63	22	M10	41	17	20/30/60
06266-5312ΔX	L	3	63	22	M12	41	17	30/60

Knurled knobs

metal parts stainless steel

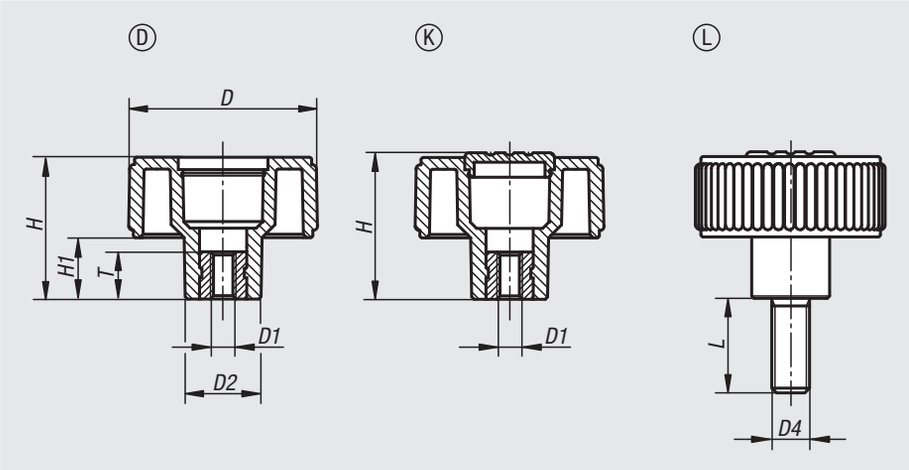

Material:
Thermoplastic, black grey.
Bush and screw stainless steel 1.4305.

Version:
Stainless steel bright.

Sample order:
nlm 06267-51056X10
(cap colour traffic red; include length L)

Note:
Δ Add the desired cap colour here. No colour code is required for black grey caps.

Drawing reference:
Form D: tapped bush without cap
Form K: tapped bush with cap
Form L: external thread

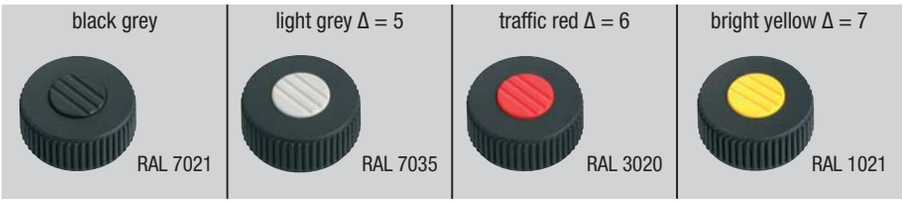

Order No.	Form	Size	D	D1	D2	H	H1	T
06267-1105	D	1	40	M5	16,5	30	13	10
06267-1106	D	1	40	M6	16,5	30	13	10
06267-1108	D	1	40	M8	16,5	30	13	14
06267-1208	D	2	50	M8	18	35	15	14
06267-1210	D	2	50	M10	18	35	15	14
06267-1310	D	3	63	M10	22	40	17	14
06267-1312	D	3	63	M12	22	40	17	18

Order No.	Form	Size	D	D1	D2	H	H1	T
06267-2105Δ	K	1	40	M5	16,5	31	13	10
06267-2106Δ	K	1	40	M6	16,5	31	13	10
06267-2108Δ	K	1	40	M8	16,5	31	13	14
06267-2208Δ	K	2	50	M8	18	36	15	14
06267-2210Δ	K	2	50	M10	18	36	15	14
06267-2310Δ	K	3	63	M10	22	41	17	14
06267-2312Δ	K	3	63	M12	22	41	17	18

Order No.	Form	Size	D	D2	D4	H	H1	L
06267-5105ΔX	L	1	40	16,5	M5	31	13	10/20
06267-5106ΔX	L	1	40	16,5	M6	31	13	10/20/40
06267-5108ΔX	L	1	40	16,5	M8	31	13	15/30/60
06267-5208ΔX	L	2	50	18	M8	36	15	15/30/60
06267-5210ΔX	L	2	50	18	M10	36	15	20/30/60
06267-5310ΔX	L	3	63	22	M10	41	17	20/30/60

Knurled knobs

with grip

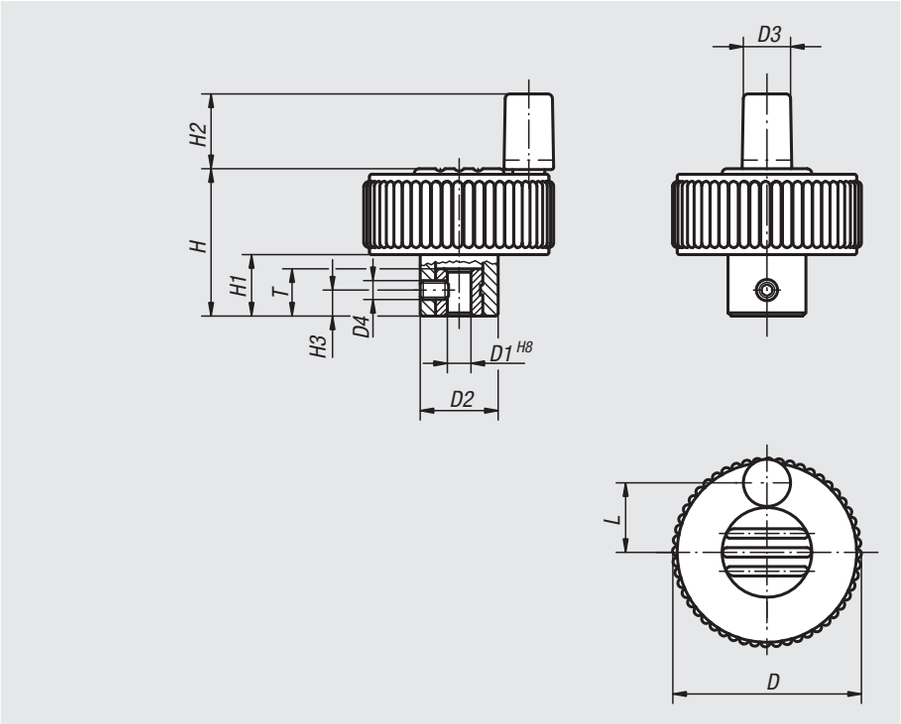

Material:
Thermoplastic, black grey.
Bush steel 5.8.

Version:
Steel blue passivated.

Sample order:
nlm 06268-21066 (cap colour traffic red)

Note:
Δ Add the desired cap colour here. No colour code is required for black grey caps. Form H: without transverse hole
Form M: with transverse hole and grub screw

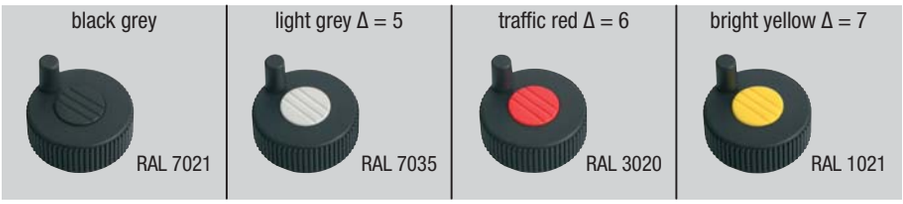

Order No.	Form	Size	D	D1	D2	D3	D4	H	H1	H2	H3	L	T
06268-2106Δ	H	1	40	6	16,5	10	-	31	13	16	-	15	10
06268-2206Δ	H	2	50	6	18	10	-	36	15	16	-	18,5	10
06268-2308Δ	H	3	63	8	22	10	-	41	17	16	-	25	14
06268-1106Δ	M	1	40	6	16,5	10	M4	31	13	16	5,5	15	10
06268-1206Δ	M	2	50	6	18	10	M4	36	15	16	5,5	18,5	10
06268-1308Δ	M	3	63	8	22	10	M4	41	17	16	8	25	14

Handwheels

DIN 950, grey cast iron

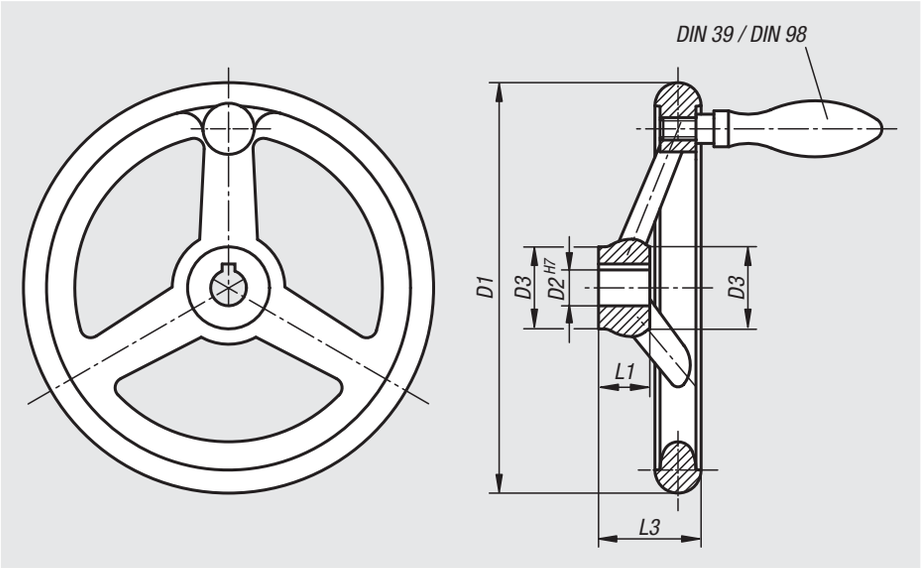

Material:
Handwheel grey cast iron.
Grip steel.

Version:
Wheel rim turned and polished.
Radial and axial run-out of rim < IT 12.

Sample order:
nlm 06271-4080X10

On request:
Hubs with square socket or plastic-coated handwheels.

DIN 6885-1

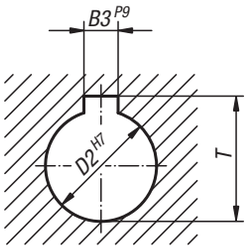

Handwheels DIN 950 grey cast iron, without grip

Order No. without slot	Order No. with slot	D1	D2 series 1	D2 series 2	D3	L1	L3	B3 series 1	B3 series 2	T series 1	T series 2	No.of spokes
06271-0080X10	**06271-1080X10**	80	10	-	25	16	29	3	-	11,4	-	3
06271-0080X12	**06271-1080X12**	80	-	12	25	16	29	-	4	-	13,8	3
06271-0100X10	**06271-1100X10**	100	10	-	26	17	33	3	-	11,4	-	3
06271-0100X12	**06271-1100X12**	100	-	12	26	17	33	-	4	-	13,8	3
06271-0125X12	**06271-1125X12**	125	12	-	33	18	36	4	-	13,8	-	3
06271-0125X14	**06271-1125X14**	125	-	14	33	18	36	-	5	-	16,3	3
06271-0140X14	**06271-1140X14**	140	14	-	33	19	39	5	-	16,3	-	3
06271-0140X16	**06271-1140X16**	140	-	16	33	19	39	-	5	-	18,3	3
06271-0160X14	**06271-1160X14**	160	14	-	37	20	40	5	-	16,3	-	3
06271-0160X16	**06271-1160X16**	160	-	16	37	20	40	-	5	-	18,3	3
06271-0180X16	**06271-1180X16**	180	16	-	36	22	43	5	-	18,3	-	3
06271-0180X18	**06271-1180X18**	180	-	18	36	22	43	-	6	-	20,8	3
06271-0200X18	**06271-1200X18**	200	18	-	38	24	45	6	-	20,8	-	3
06271-0200X22	**06271-1200X22**	200	-	22	38	24	45	-	6	-	24,8	3
06271-0250X22	**06271-1250X22**	250	22	-	46	28	50	6	-	24,8	-	5
06271-0250X26	**06271-1250X26**	250	-	26	46	28	50	-	8	-	29,3	5
06271-0315X26	**06271-1315X26**	315	26	-	54	33	56	8	-	29,3	-	5
06271-0315X30	**06271-1315X30**	315	-	30	54	33	56	-	8	-	33,3	5
06271-0400X30	**06271-1400X30**	400	30	-	68	38	63	8	-	33,3	-	5
06271-0400X34	**06271-1400X34**	400	-	34	68	38	63	-	10	-	37,3	5
06271-0500X34	**06271-1500X34**	500	34	-	79	45	72	10	-	37,3	-	5
06271-0500X40	**06271-1500X40**	500	-	40	79	45	72	-	12	-	43,3	5

Handwheels

DIN 950, grey cast iron

Handwheels DIN 950 grey cast iron, with fixed grip

Order No. without slot	Order No. with slot	D1	D2 series 1	D2 series 2	D3	L1	L3	B3 series 1	B3 series 2	T series 1	T series 2	No.of spokes	fixed grip DIN 39 Form E
06271-2080X10	06271-3080X10	80	10	-	25	16	29	3	-	11,4	-	3	ø16 x M6 x 50
06271-2080X12	06271-3080X12	80	-	12	25	16	29	-	4	-	13,8	3	ø16 x M6 x 50
06271-2100X10	06271-3100X10	100	10	-	26	17	33	3	-	11,4	-	3	ø16 x M6 x 50
06271-2100X12	06271-3100X12	100	-	12	26	17	33	-	4	-	13,8	3	ø16 x M6 x 50
06271-2125X12	06271-3125X12	125	12	-	33	18	36	4	-	13,8	-	3	ø20 x M8 x 64
06271-2125X14	06271-3125X14	125	-	14	33	18	36	-	5	-	16,3	3	ø20 x M8 x 64
06271-2140X14	06271-3140X14	140	14	-	33	19	39	5	-	16,3	-	3	ø20 x M8 x 64
06271-2140X16	06271-3140X16	140	-	16	33	19	39	-	5	-	18,3	3	ø20 x M8 x 64
06271-2160X14	06271-3160X14	160	14	-	37	20	40	5	-	16,3	-	3	ø25 x M10 x 80
06271-2160X16	06271-3160X16	160	-	16	37	20	40	-	5	-	18,3	3	ø25 x M10 x 80
06271-2180X16	06271-3180X16	180	16	-	36	22	43	5	-	18,3	-	3	ø25 x M10 x 80
06271-2180X18	06271-3180X18	180	-	18	36	22	43	-	6	-	20,8	3	ø25 x M10 x 80
06271-2200X18	06271-3200X18	200	18	-	38	24	45	6	-	20,8	-	3	ø25 x M10 x 80
06271-2200X22	06271-3200X22	200	-	22	38	24	45	-	6	-	24,8	3	ø25 x M10 x 80
06271-2250X22	06271-3250X22	250	22	-	46	28	50	6	-	24,8	-	5	ø32 x M12 x 100
06271-2250X26	06271-3250X26	250	-	26	46	28	50	-	8	-	29,3	5	ø32 x M12 x 100
06271-2315X26	06271-3315X26	315	26	-	54	33	56	8	-	29,3	-	5	ø32 x M12 x 100
06271-2315X30	06271-3315X30	315	-	30	54	33	56	-	8	-	33,3	5	ø32 x M12 x 100
06271-2400X30	06271-3400X30	400	30	-	68	38	63	8	-	33,3	-	5	ø36 x M16 x 112
06271-2400X34	06271-3400X34	400	-	34	68	38	63	-	10	-	37,3	5	ø36 x M16 x 112
06271-2500X34	06271-3500X34	500	34	-	79	45	72	10	-	37,3	-	5	ø36 x M16 x 112
06271-2500X40	06271-3500X40	500	-	40	79	45	72	-	12	-	43,3	5	ø36 x M16 x 112

Handwheels DIN 950 grey cast iron, with revolving grip

Order No. without slot	Order No. with slot	D1	D2 series 1	D2 series 2	D3	L1	L3	B3 series 1	B3 series 2	T series 1	T series 2	No.of spokes	revolving grip DIN 98 Form E
06271-4080X10	06271-5080X10	80	10	-	25	16	29	3	-	11,4	-	3	ø16 x M6 x 54.5
06271-4080X12	06271-5080X12	80	-	12	25	16	29	-	4	-	13,8	3	ø16 x M6 x 54.5
06271-4100X10	06271-5100X10	100	10	-	26	17	33	3	-	11,4	-	3	ø16 x M6 x 54.5
06271-4100X12	06271-5100X12	100	-	12	26	17	33	-	4	-	13,8	3	ø16 x M6 x 54.5
06271-4125X12	06271-5125X12	125	12	-	33	18	36	4	-	13,8	-	3	ø20 x M8 x 67
06271-4125X14	06271-5125X14	125	-	14	33	18	36	-	5	-	16,3	3	ø20 x M8 x 67
06271-4140X14	06271-5140X14	140	14	-	33	19	39	5	-	16,3	-	3	ø20 x M8 x 67
06271-4140X16	06271-5140X16	140	-	16	33	19	39	-	5	-	18,3	3	ø20 x M8 x 67
06271-4160X14	06271-5160X14	160	14	-	37	20	40	5	-	16,3	-	3	ø25 x M10 x 83
06271-4160X16	06271-5160X16	160	-	16	37	20	40	-	5	-	18,3	3	ø25 x M10 x 83
06271-4180X16	06271-5180X16	180	16	-	36	22	43	5	-	18,3	-	3	ø25 x M10 x 83
06271-4180X18	06271-5180X18	180	-	18	36	22	43	-	6	-	20,8	3	ø25 x M10 x 83
06271-4200X18	06271-5200X18	200	18	-	38	24	45	6	-	20,8	-	3	ø25 x M10 x 83
06271-4200X22	06271-5200X22	200	-	22	38	24	45	-	6	-	24,8	3	ø25 x M10 x 83
06271-4250X22	06271-5250X22	250	22	-	46	28	50	6	-	24,8	-	5	ø32 x M12 x 105,5
06271-4250X26	06271-5250X26	250	-	26	46	28	50	-	8	-	29,3	5	ø32 x M12 x 105,5
06271-4315X26	06271-5315X26	315	26	-	54	33	56	8	-	29,3	-	5	ø32 x M12 x 105,5
06271-4315X30	06271-5315X30	315	-	30	54	33	56	-	8	-	33,3	5	ø32 x M12 x 105,5
06271-4400X30	06271-5400X30	400	30	-	68	38	63	8	-	33,3	-	5	ø36 x M16 x 117
06271-4400X34	06271-5400X34	400	-	34	68	38	63	-	10	-	37,3	5	ø36 x M16 x 117
06271-4500X34	06271-5500X34	500	34	-	79	45	72	10	-	37,3	-	5	ø36 x M16 x 117
06271-4500X40	06271-5500X40	500	-	40	79	45	72	-	12	-	43,3	5	ø36 x M16 x 117

Handwheels

DIN 950, aluminium

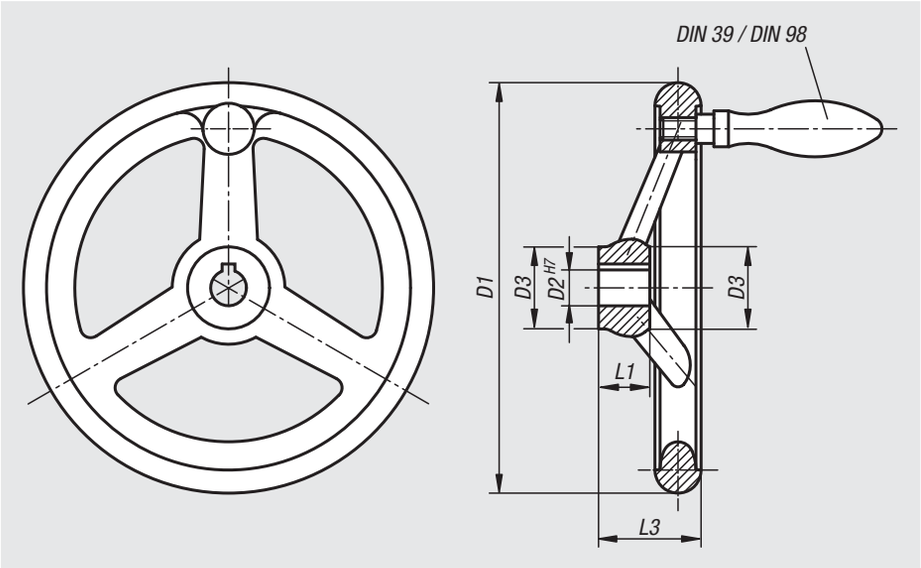

Material:
Handwheel aluminium.
Fixed grip aluminium, axle part black oxidised steel.
Revolving grip aluminium, axle part galvanized and blue passivated steel.

Version:
Wheel rim turned and polished.
Radial and axial run-out of rim < IT 12.

Sample order:
nlm 06273-4080X10

On request:
Hubs with square socket or plastic-coated handwheels.

DIN 6885-1

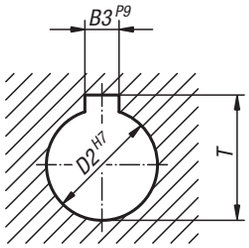

Handwheels DIN 950 aluminium, without grip

Order No. without slot	Order No. with slot	D1	D2 series 1	D2 series 2	D3	L1	L3	B3 series 1	B3 series 2	T series 1	T series 2	No.of spokes
06273-0080X10	**06273-1080X10**	80	10	-	25	16	29	3	-	11,4	-	3
06273-0080X12	**06273-1080X12**	80	-	12	25	16	29	-	4	-	13,8	3
06273-0100X10	**06273-1100X10**	100	10	-	29	17	33	3	-	11,4	-	3
06273-0100X12	**06273-1100X12**	100	-	12	29	17	33	-	4	-	13,8	3
06273-0125X12	**06273-1125X12**	125	12	-	31	18	36	4	-	13,8	-	3
06273-0125X14	**06273-1125X14**	125	-	14	31	18	36	-	5	-	16,3	3
06273-0140X14	**06273-1140X14**	140	14	-	36	19	39	5	-	16,3	-	3
06273-0140X16	**06273-1140X16**	140	-	16	36	19	39	-	5	-	18,3	3
06273-0160X14	**06273-1160X14**	160	14	-	36	20	40	5	-	16,3	-	3
06273-0160X16	**06273-1160X16**	160	-	16	36	20	40	-	5	-	18,3	3
06273-0180X16	**06273-1180X16**	180	16	-	37	22	43	5	-	18,3	-	3
06273-0180X18	**06273-1180X18**	180	-	18	37	22	43	-	6	-	20,8	3
06273-0200X18	**06273-1200X18**	200	18	-	43	24	45	6	-	20,8	-	3
06273-0200X22	**06273-1200X22**	200	-	22	43	24	45	-	6	-	24,8	3
06273-0250X22	**06273-1250X22**	250	22	-	49	28	50	6	-	24,8	-	5
06273-0250X26	**06273-1250X26**	250	-	26	49	28	50	-	8	-	29,3	5
06273-0315X26	**06273-1315X26**	315	26	-	54	33	56	8	-	29,3	-	5
06273-0315X30	**06273-1315X30**	315	-	30	54	33	56	-	8	-	33,3	5
06273-0400X30	**06273-1400X30**	400	30	-	65	38	63	8	-	33,3	-	5
06273-0400X34	**06273-1400X34**	400	-	34	65	38	63	-	10	-	37,3	5
06273-0500X34	**06273-1500X34**	500	34	-	79	45	72	10	-	37,3	-	5
06273-0500X40	**06273-1500X40**	500	-	40	79	45	72	-	12	-	43,3	5

Handwheels

DIN 950, aluminium

Handwheels DIN 950 aluminium, with fixed grip

Order No. without slot	Order No. with slot	D1	D2 series 1	D2 series 2	D3	L1	L3	B3 series 1	B3 series 2	T series 1	T series 2	No.of spokes	fixed grip DIN 39 Form E
06273-2080X10	06273-3080X10	80	10	-	25	16	29	3	-	11,4	-	3	ø16 x M6 x 50
06273-2080X12	06273-3080X12	80	-	12	25	16	29	-	4	-	13,8	3	ø16 x M6 x 50
06273-2100X10	06273-3100X10	100	10	-	29	17	33	3	-	11,4	-	3	ø16 x M6 x 50
06273-2100X12	06273-3100X12	100	-	12	29	17	33	-	4	-	13,8	3	ø16 x M6 x 50
06273-2125X12	06273-3125X12	125	12	-	31	18	36	4	-	13,8	-	3	ø20 x M8 x 64
06273-2125X14	06273-3125X14	125	-	14	31	18	36	-	5	-	16,3	3	ø20 x M8 x 64
06273-2140X14	06273-3140X14	140	14	-	36	19	39	5	-	16,3	-	3	ø20 x M8 x 64
06273-2140X16	06273-3140X16	140	-	16	36	19	39	-	5	-	18,3	3	ø20 x M8 x 64
06273-2160X14	06273-3160X14	160	14	-	36	20	40	5	-	16,3	-	3	ø25 x M10 x 80
06273-2160X16	06273-3160X16	160	-	16	36	20	40	-	5	-	18,3	3	ø25 x M10 x 80
06273-2180X16	06273-3180X16	180	16	-	37	22	43	5	-	18,3	-	3	ø25 x M10 x 80
06273-2180X18	06273-3180X18	180	-	18	37	22	43	-	6	-	20,8	3	ø25 x M10 x 80
06273-2200X18	06273-3200X18	200	18	-	43	24	45	6	-	20,8	-	3	ø25 x M10 x 80
06273-2200X22	06273-3200X22	200	-	22	43	24	45	-	6	-	24,8	3	ø25 x M10 x 80
06273-2250X22	06273-3250X22	250	22	-	49	28	50	6	-	24,8	-	5	ø32 x M12 x 100
06273-2250X26	06273-3250X26	250	-	26	49	28	50	-	8	-	29,3	5	ø32 x M12 x 100
06273-2315X26	06273-3315X26	315	26	-	54	33	56	8	-	29,3	-	5	ø32 x M12 x 100
06273-2315X30	06273-3315X30	315	-	30	54	33	56	-	8	-	33,3	5	ø32 x M12 x 100
06273-2400X30	06273-3400X30	400	30	-	65	38	63	8	-	33,3	-	5	ø36 x M16 x 112
06273-2400X34	06273-3400X34	400	-	34	65	38	63	-	10	-	37,3	5	ø36 x M16 x 112
06273-2500X34	06273-3500X34	500	34	-	79	45	72	10	-	37,3	-	5	ø36 x M16 x 112
06273-2500X40	06273-3500X40	500	-	40	79	45	72	-	12	-	43,3	5	ø36 x M16 x 112

Handwheels DIN 950 aluminium, with revolving grip

Order No. without slot	Order No. with slot	D1	D2 series 1	D2 series 2	D3	L1	L3	B3 series 1	B3 series 2	T series 1	T series 2	No.of spokes	revolving grip DIN 98 Form E
06273-4080X10	06273-5080X10	80	10	-	25	16	29	3	-	11,4	-	3	ø16 x M6 x 54.5
06273-4080X12	06273-5080X12	80	-	12	25	16	29	-	4	-	13,8	3	ø16 x M6 x 54.5
06273-4100X10	06273-5100X10	100	10	-	29	17	33	3	-	11,4	-	3	ø16 x M6 x 54.5
06273-4100X12	06273-5100X12	100	-	12	29	17	33	-	4	-	13,8	3	ø16 x M6 x 54.5
06273-4125X12	06273-5125X12	125	12	-	31	18	36	4	-	13,8	-	3	ø20 x M8 x 67
06273-4125X14	06273-5125X14	125	-	14	31	18	36	-	5	-	16,3	3	ø20 x M8 x 67
06273-4140X14	06273-5140X14	140	14	-	36	19	39	5	-	16,3	-	3	ø20 x M8 x 67
06273-4140X16	06273-5140X16	140	-	16	36	19	39	-	5	-	18,3	3	ø20 x M8 x 67
06273-4160X14	06273-5160X14	160	14	-	36	20	40	5	-	16,3	-	3	ø25 x M10 x 83
06273-4160X16	06273-5160X16	160	-	16	36	20	40	-	5	-	18,3	3	ø25 x M10 x 83
06273-4180X16	06273-5180X16	180	16	-	37	22	43	5	-	18,3	-	3	ø25 x M10 x 83
06273-4180X18	06273-5180X18	180	-	18	37	22	43	-	6	-	20,8	3	ø25 x M10 x 83
06273-4200X18	06273-5200X18	200	18	-	43	24	45	6	-	20,8	-	3	ø25 x M10 x 83
06273-4200X22	06273-5200X22	200	-	22	43	24	45	-	6	-	24,8	3	ø25 x M10 x 83
06273-4250X22	06273-5250X22	250	22	-	49	28	50	6	-	24,8	-	5	ø32 x M12 x 105,5
06273-4250X26	06273-5250X26	250	-	26	49	28	50	-	8	-	29,3	5	ø32 x M12 x 105,5
06273-4315X26	06273-5315X26	315	26	-	54	33	56	8	-	29,3	-	5	ø32 x M12 x 105,5
06273-4315X30	06273-5315X30	315	-	30	54	33	56	-	8	-	33,3	5	ø32 x M12 x 105,5
06273-4400X30	06273-5400X30	400	30	-	65	38	63	8	-	33,3	-	5	ø36 x M16 x 117
06273-4400X34	06273-5400X34	400	-	34	65	38	63	-	10	-	37,3	5	ø36 x M16 x 117
06273-4500X34	06273-5500X34	500	34	-	79	45	72	10	-	37,3	-	5	ø36 x M16 x 117
06273-4500X40	06273-5500X40	500	-	40	79	45	72	-	12	-	43,3	5	ø36 x M16 x 117

Handwheels

DIN 950, stainless steel

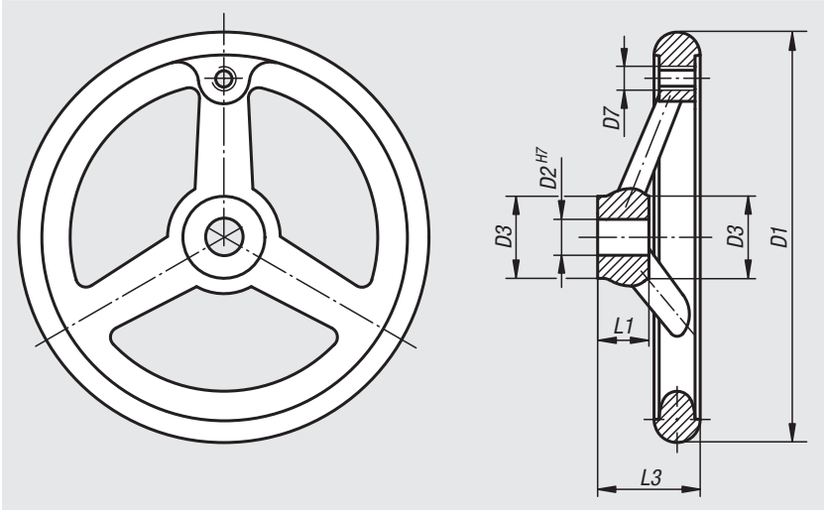

Material:
Stainless steel 1.4401.

Version:
Wheel rim turned
and polished

Sample order:
nlm 06274-0100X10

DIN 6885-1

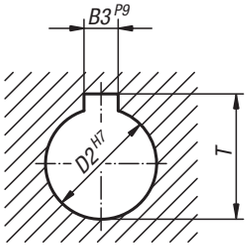

Order No.	Version	D1	D2 series 1	D3	D7	L1	L3	B3 series 1	T series 1	No. of spokes
06274-0100X10	without slot	100	10	26	M6	17	33	-	-	3
06274-0125X12	without slot	125	12	28	M8	18	36	-	-	3
06274-0140X14	without slot	140	14	30	M8	19	39	-	-	3
06274-0160X16	without slot	160	16	32	M10	20	40	-	-	3
06274-0200X18	without slot	200	18	38	M10	24	45	-	-	3
06274-1100X10	with slot	100	10	26	M6	17	33	3	11,4	3
06274-1125X12	with slot	125	12	28	M8	18	36	4	13,8	3
06274-1140X14	with slot	140	14	30	M8	19	39	5	16,3	3
06274-1160X16	with slot	160	16	32	M10	20	40	5	18,3	3
06274-1200X18	with slot	200	18	38	M10	24	45	6	20,8	3

Notes

Handwheels disc

aluminium

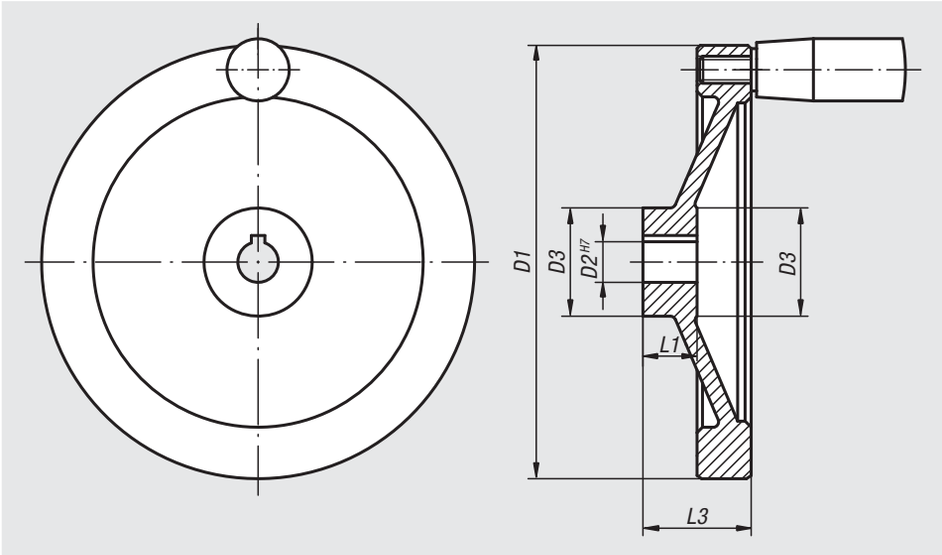

Material:
Disc handwheel aluminium.
Cylinder grip black Duroplast PF 31-DIN 7708.
Hub galvanized steel.

Version:
Wheel rim turned and polished.
Radial and axial run-out of rim < IT 12.

Sample order:
nlm 06275-4080X10

On request:
Hubs with square socket or plastic-coated handwheels.

DIN 6885-1

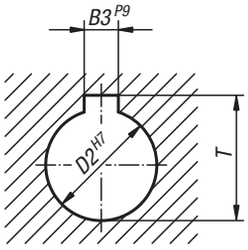

Handwheels disc, aluminium, without grip

Order No. without slot	Order No. with slot	D1	D2 series 1	D2 series 2	D3	L1	L3	B3 series 1	B3 series 2	T series 1	T series 2
06275-0080X10	06275-1080X10	80	10	-	26	16	31	3	-	11,4	-
06275-0080X12	06275-1080X12	80	-	12	26	16	31	-	4	-	13,8
06275-0100X10	06275-1100X10	100	10	-	31	17	34	3	-	11,4	-
06275-0100X12	06275-1100X12	100	-	12	31	17	34	-	4	-	13,8
06275-0125X12	06275-1125X12	125	12	-	30	18	37	4	-	13,8	-
06275-0125X14	06275-1125X14	125	-	14	30	18	37	-	5	-	16,3
06275-0140X14	06275-1140X14	140	14	-	34	19	34	5	-	16,3	-
06275-0140X15	06275-1140X15	140	-	15	34	19	34	-	5	-	17,3
06275-0160X15	06275-1160X15	160	15	-	40	20	40	5	-	17,3	-
06275-0160X16	06275-1160X16	160	-	16	40	20	40	-	5	-	18,3
06275-0200X18	06275-1200X18	200	18	-	50	24	46	6	-	20,8	-
06275-0200X20	06275-1200X20	200	-	20	50	24	46	-	6	-	22,8
06275-0250X22	06275-1250X22	250	22	-	50	28	49	6	-	24,8	-
06275-0250X24	06275-1250X24	250	-	24	50	28	49	-	8	-	27,3

Handwheels disc

aluminium

Handwheels disc, aluminium, with fixed cylinder grip

Order No. without slot	Order No. with slot	D1	D2 series 1	D2 series 2	D3	L1	L3	B3 series 1	B3 series 2	T series 1	T series 2	Fixed cylinder grip
06275-2080X10	06275-3080X10	80	10	-	26	16	31	3	-	11,4	-	ø18 x M6 x 40
06275-2080X12	06275-3080X12	80	-	12	26	16	31	-	4	-	13,8	ø18 x M6 x 40
06275-2100X10	06275-3100X10	100	10	-	31	17	34	3	-	11,4	-	ø18 x M6 x 40
06275-2100X12	06275-3100X12	100	-	12	31	17	34	-	4	-	13,8	ø18 x M6 x 40
06275-2125X12	06275-3125X12	125	12	-	30	18	37	4	-	13,8	-	ø21 x M8 x 50
06275-2125X14	06275-3125X14	125	-	14	30	18	37	-	5	-	16,3	ø21 x M8 x 50
06275-2140X14	06275-3140X14	140	14	-	34	19	34	5	-	16,3	-	ø21 x M8 x 50
06275-2140X15	06275-3140X15	140	-	15	34	19	34	-	5	-	17,3	ø21 x M8 x 50
06275-2160X15	06275-3160X15	160	15	-	40	20	40	5	-	17,3	-	ø26 x M10 x 80
06275-2160X16	06275-3160X16	160	-	16	40	20	40	-	5	-	18,3	ø26 x M10 x 80
06275-2200X18	06275-3200X18	200	18	-	50	24	46	6	-	20,8	-	ø26 x M10 x 80
06275-2200X20	06275-3200X20	200	-	20	50	24	46	-	6	-	22,8	ø26 x M10 x 80
06275-2250X22	06275-3250X22	250	22	-	50	28	49	6	-	24,8	-	ø28 x M12 x 90
06275-2250X24	06275-3250X24	250	-	24	50	28	49	-	8	-	27,3	ø28 x M12 x 90

Handwheels disc, aluminium, with revolving cylinder grip

Order No. without slot	Order No. with slot	D1	D2 series 1	D2 series 2	D3	L1	L3	B3 series 1	B3 series 2	T series 1	T series 2	Revolving cylinder grip
06275-4080X10	06275-5080X10	80	10	-	26	16	31	3	-	11,4	-	ø18 x M6 x 40
06275-4080X12	06275-5080X12	80	-	12	26	16	31	-	4	-	13,8	ø18 x M6 x 40
06275-4100X10	06275-5100X10	100	10	-	31	17	34	3	-	11,4	-	ø18 x M6 x 40
06275-4100X12	06275-5100X12	100	-	12	31	17	34	-	4	-	13,8	ø18 x M6 x 40
06275-4125X12	06275-5125X12	125	12	-	30	18	37	4	-	13,8	-	ø22 x M8 x 56
06275-4125X14	06275-5125X14	125	-	14	30	18	37	-	5	-	16,3	ø22 x M8 x 56
06275-4140X14	06275-5140X14	140	14	-	34	19	34	5	-	16,3	-	ø22 x M8 x 56
06275-4140X15	06275-5140X15	140	-	15	34	19	34	-	5	-	17,3	ø22 x M8 x 56
06275-4160X15	06275-5160X15	160	15	-	40	20	40	5	-	17,3	-	ø26 x M10 x 80
06275-4160X16	06275-5160X16	160	-	16	40	20	40	-	5	-	18,3	ø26 x M10 x 80
06275-4200X18	06275-5200X18	200	18	-	50	24	46	6	-	20,8	-	ø26 x M10 x 80
06275-4200X20	06275-5200X20	200	-	20	50	24	46	-	6	-	22,8	ø26 x M10 x 80
06275-4250X22	06275-5250X22	250	22	-	50	28	49	6	-	24,8	-	ø31 x M12 x 102
06275-4250X24	06275-5250X24	250	-	24	50	28	49	-	8	-	27,3	ø31 x M12 x 102

Handwheels disc

aluminium

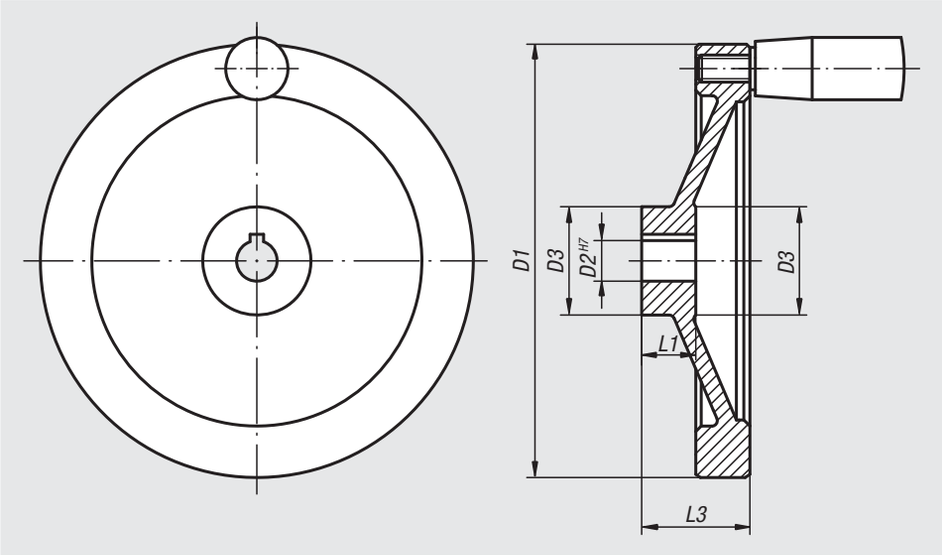

Material:
Disc handwheel aluminium.
Cylinder grip black Duroplast PF 31-DIN 7708.
Hub galvanized steel.

Version:
Black, powder-coated.
Wheel rim turned.
Radial and axial run-out of rim < IT 12.

Sample order:
nlm 06275-01080x10

On request:
Hubs with square socket or plastic-coated handwheels.

DIN 6885-1

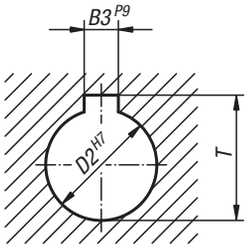

Handwheels disc, aluminium, without grip

Order No. without slot	Order No. with slot	D1	D2 series 1	D2 series 2	D3	L1	L3	B3 series 1	B3 series 2	T series 1	T series 2
06275-01080X10	**06275-11080X10**	80	10	-	26	16	31	3	-	11,4	-
06275-01080X12	**06275-11080X12**	80	-	12	26	16	31	-	4	-	13,8
06275-01100X10	**06275-11100X10**	100	10	-	31	17	34	3	-	11,4	-
06275-01100X12	**06275-11100X12**	100	-	12	31	17	34	-	4	-	13,8
06275-01125X12	**06275-11125X12**	125	12	-	30	18	37	4	-	13,8	-
06275-01125X14	**06275-11125X14**	125	-	14	30	18	37	-	5	-	16,3
06275-01140X14	**06275-11140X14**	140	14	-	34	19	34	5	-	16,3	-
06275-01140X15	**06275-11140X15**	140	-	15	34	19	34	-	5	-	17,3
06275-01160X15	**06275-11160X15**	160	15	-	40	20	40	5	-	17,3	-
06275-01160X16	**06275-11160X16**	160	-	16	40	20	40	-	5	-	18,3
06275-01200X18	**06275-11200X18**	200	18	-	50	24	46	6	-	20,8	-
06275-01200X20	**06275-11200X20**	200	-	20	50	24	46	-	6	-	22,8
06275-01250X22	**06275-11250X22**	250	22	-	50	28	49	6	-	24,8	-
06275-01250X24	**06275-11250X24**	250	-	24	50	28	49	-	8	-	27,3

Handwheels disc

aluminium

Handwheels disc, aluminium, with fixed cylinder grip

Order No. without slot	Order No. with slot	D1	D2 series 1	D2 series 2	D3	L1	L3	B3 series 1	B3 series 2	T series 1	T series 2	Fixed cylinder grip
06275-21080X10	06275-31080X10	80	10	-	26	16	31	3	-	11,4	-	ø18 x M6 x 40
06275-21080X12	06275-31080X12	80	-	12	26	16	31	-	4	-	13,8	ø18 x M6 x 40
06275-21100X10	06275-31100X10	100	10	-	31	17	34	3	-	11,4	-	ø18 x M6 x 40
06275-21100X12	06275-31100X12	100	-	12	31	17	34	-	4	-	13,8	ø18 x M6 x 40
06275-21125X12	06275-31125X12	125	12	-	30	18	37	4	-	13,8	-	ø21 x M8 x 50
06275-21125X14	06275-31125X14	125	-	14	30	18	37	-	5	-	16,3	ø21 x M8 x 50
06275-21140X14	06275-31140X14	140	14	-	34	19	34	5	-	16,3	-	ø21 x M8 x 50
06275-21140X15	06275-31140X15	140	-	15	34	19	34	-	5	-	17,3	ø21 x M8 x 50
06275-21160X15	06275-31160X15	160	15	-	40	20	40	5	-	17,3	-	ø26 x M10 x 80
06275-21160X16	06275-31160X16	160	-	16	40	20	40	-	5	-	18,3	ø26 x M10 x 80
06275-21200X18	06275-31200X18	200	18	-	50	24	46	6	-	20,8	-	ø26 x M10 x 80
06275-21200X20	06275-31200X20	200	-	20	50	24	46	-	6	-	22,8	ø26 x M10 x 80
06275-21250X22	06275-31250X22	250	22	-	50	28	49	6	-	24,8	-	ø28 x M12 x 90
06275-21250X24	06275-31250X24	250	-	24	50	28	49	-	8	-	27,3	ø28 x M12 x 90

Handwheels disc, aluminium, with revolving cylinder grip

Order No. without slot	Order No. with slot	D1	D2 series 1	D2 series 2	D3	L1	L3	B3 series 1	B3 series 2	T series 1	T series 2	Revolving cylinder grip
06275-41080X10	06275-51080X10	80	10	-	26	16	31	3	-	11,4	-	ø18 x M6 x 40
06275-41080X12	06275-51080X12	80	-	12	26	16	31	-	4	-	13,8	ø18 x M6 x 40
06275-41100X10	06275-51100X10	100	10	-	31	17	34	3	-	11,4	-	ø18 x M6 x 40
06275-41100X12	06275-51100X12	100	-	12	31	17	34	-	4	-	13,8	ø18 x M6 x 40
06275-41125X12	06275-51125X12	125	12	-	30	18	37	4	-	13,8	-	ø22 x M8 x 56
06275-41125X14	06275-51125X14	125	-	14	30	18	37	-	5	-	16,3	ø22 x M8 x 56
06275-41140X14	06275-51140X14	140	14	-	34	19	34	5	-	16,3	-	ø22 x M8 x 56
06275-41140X15	06275-51140X15	140	-	15	34	19	34	-	5	-	17,3	ø22 x M8 x 56
06275-41160X15	06275-51160X15	160	15	-	40	20	40	5	-	17,3	-	ø26 x M10 x 80
06275-41160X16	06275-51160X16	160	-	16	40	20	40	-	5	-	18,3	ø26 x M10 x 80
06275-41200X18	06275-51200X18	200	18	-	50	24	46	6	-	20,8	-	ø26 x M10 x 80
06275-41200X20	06275-51200X20	200	-	20	50	24	46	-	6	-	22,8	ø26 x M10 x 80
06275-41250X22	06275-51250X22	250	22	-	50	28	49	6	-	24,8	-	ø31 x M12 x 102
06275-41250X24	06275-51250X24	250	-	24	50	28	49	-	8	-	27,3	ø31 x M12 x 102

Disc handwheels stainless steel

with revolving grip

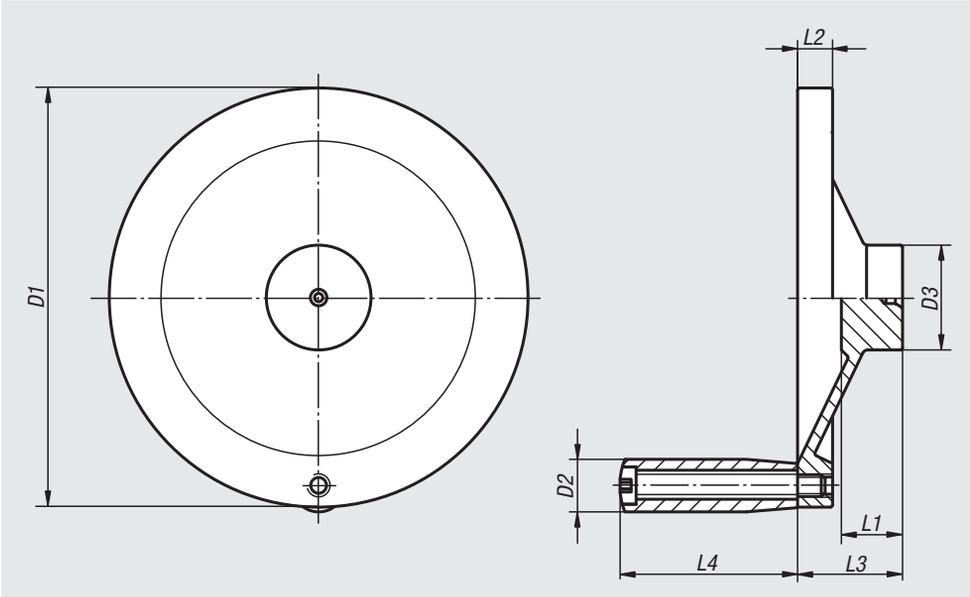

Material:
Stainless steel 1.4301.

Version:
Turned, bright.
Hub is centre bored.

Sample order:
nlm 06276-01-4076X00

On request:
Stainless steel 1.4401.
Stainless steel 1.4404.
Stainless steel 1.4571.

Order No.	D1	D2	D3	L1	L2	L3	L4
06276-01-4076X00	76,2	9,91	22,1	17,02	6,1	27,9	37,9
06276-01-4101X00	101,6	11,94	25,9	18,03	7,87	31,7	39,88
06276-01-4152X00	152,4	19,05	38,1	22,1	12,7	38,1	63,5
06276-01-4203X00	203,2	22,1	45,7	24,13	14,22	45,7	76,2
06276-01-4254X00	254	22,1	50,8	26,67	15,75	50,8	76,2

Notes

Handwheels 2-spoke

aluminium, flat wheel rim

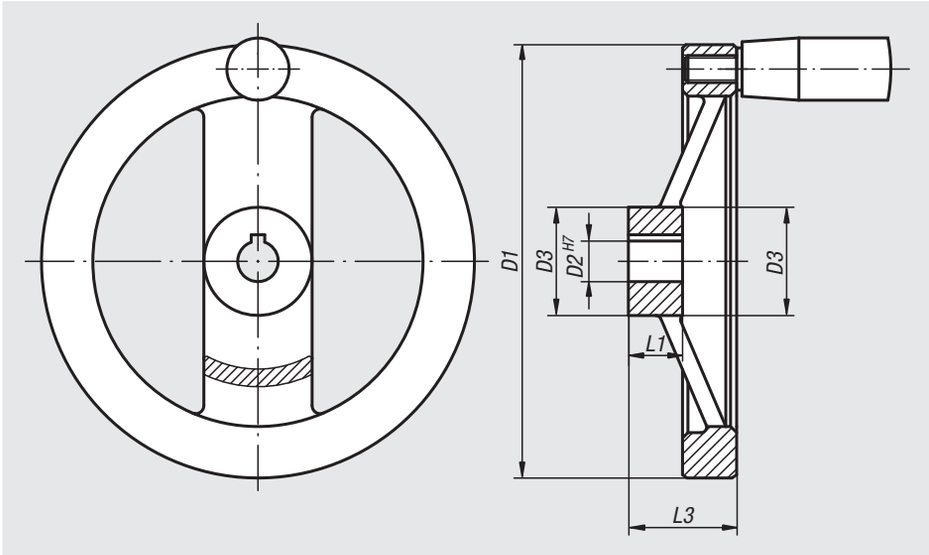

Material:
Handwheels aluminium.
Cylinder grip black Duroplast PF 31-DIN 7708.
Hub galvanized steel.

Version:
Wheel rim turned and polished.
Radial and axial run-out of rim < IT 12.

Sample order:
nlm 06277-4080X10

On request:
Hubs with square socket or plastic-coated handwheels.

DIN 6885-1

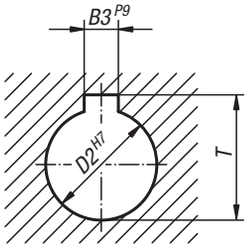

Handwheels 2-spoke, aluminium, flat wheel rim, without grip

Order No. without slot	Order No. with slot	D1	D2 series 1	D2 series 2	D3	L1	L3	B3 series 1	B3 series 2	T series 1	T series 2
06277-0080X10	**06277-1080X10**	80	10	-	24	16	28	3	-	11,4	-
06277-0080X12	**06277-1080X12**	80	-	12	24	16	28	-	4	-	13,8
06277-0100X10	**06277-1100X10**	100	10	-	26	17	33	3	-	11,4	-
06277-0100X12	**06277-1100X12**	100	-	12	26	17	33	-	4	-	13,8
06277-0125X12	**06277-1125X12**	125	12	-	31	18	33,5	4	-	13,8	-
06277-0125X14	**06277-1125X14**	125	-	14	31	18	33,5	-	5	-	16,3
06277-0160X14	**06277-1160X14**	160	14	-	36	20	39	5	-	16,3	-
06277-0160X16	**06277-1160X16**	160	-	16	36	20	39	-	5	-	18,3
06277-0200X18	**06277-1200X18**	200	18	-	42	24	45	6	-	20,8	-
06277-0200X20	**06277-1200X20**	200	-	20	42	24	45	-	6	-	22,8
06277-0250X22	**06277-1250X22**	250	22	-	48	28	51	6	-	24,8	-
06277-0250X26	**06277-1250X26**	250	-	26	48	28	51	-	8	-	29,3

Handwheels 2-spoke

aluminium, flat wheel rim

Handwheels 2-spoke, aluminium, flat wheel rim, with fixed cylinder grip

Order No. without slot	Order No. with slot	D1	D2 series 1	D2 series 2	D3	L1	L3	B3 series 1	B3 series 2	T series 1	T series 2	Fixed cylinder grip
06277-2080X10	06277-3080X10	80	10	-	24	16	28	3	-	11,4	-	ø18 x M6 x 40
06277-2080X12	06277-3080X12	80	-	12	24	16	28	-	4	-	13,8	ø18 x M6 x 40
06277-2100X10	06277-3100X10	100	10	-	26	17	33	3	-	11,4	-	ø18 x M6 x 40
06277-2100X12	06277-3100X12	100	-	12	26	17	33	-	4	-	13,8	ø18 x M6 x 40
06277-2125X12	06277-3125X12	125	12	-	31	18	33,5	4	-	13,8	-	ø21 x M8 x 50
06277-2125X14	06277-3125X14	125	-	14	31	18	33,5	-	5	-	16,3	ø21 x M8 x 50
06277-2160X14	06277-3160X14	160	14	-	36	20	39	5	-	16,3	-	ø26 x M10 x 80
06277-2160X16	06277-3160X16	160	-	16	36	20	39	-	5	-	18,3	ø26 x M10 x 80
06277-2200X18	06277-3200X18	200	18	-	42	24	45	6	-	20,8	-	ø26 x M10 x 80
06277-2200X20	06277-3200X20	200	-	20	42	24	45	-	6	-	22,8	ø26 x M10 x 80
06277-2250X22	06277-3250X22	250	22	-	48	28	51	6	-	24,8	-	ø28 x M12 x 90
06277-2250X26	06277-3250X26	250	-	26	48	28	51	-	8	-	29,3	ø28 x M12 x 90

Handwheels 2-spoke, aluminium, flat wheel rim, with revolving cylinder grip

Order No. without slot	Order No. with slot	D1	D2 series 1	D2 series 2	D3	L1	L3	B3 series 1	B3 series 2	T series 1	T series 2	Revolving cylinder grip
06277-4080X10	06277-5080X10	80	10	-	24	16	28	3	-	11,4	-	ø18 x M6 x 40
06277-4080X12	06277-5080X12	80	-	12	24	16	28	-	4	-	13,8	ø18 x M6 x 40
06277-4100X10	06277-5100X10	100	10	-	26	17	33	3	-	11,4	-	ø18 x M6 x 40
06277-4100X12	06277-5100X12	100	-	12	26	17	33	-	4	-	13,8	ø18 x M6 x 40
06277-4125X12	06277-5125X12	125	12	-	31	18	33,5	4	-	13,8	-	ø22 x M8 x 56
06277-4125X14	06277-5125X14	125	-	14	31	18	33,5	-	5	-	16,3	ø22 x M8 x 56
06277-4160X14	06277-5160X14	160	14	-	36	20	39	5	-	16,3	-	ø26 x M10 x 80
06277-4160X16	06277-5160X16	160	-	16	36	20	39	-	5	-	18,3	ø26 x M10 x 80
06277-4200X18	06277-5200X18	200	18	-	42	24	45	6	-	20,8	-	ø26 x M10 x 80
06277-4200X20	06277-5200X20	200	-	20	42	24	45	-	6	-	22,8	ø26 x M10 x 80
06277-4250X22	06277-5250X22	250	22	-	48	28	51	6	-	24,8	-	ø31 x M12 x 102
06277-4250X26	06277-5250X26	250	-	26	48	28	51	-	8	-	29,3	ø31 x M12 x 102

Handwheels 2-spoke

flat rim, aluminium

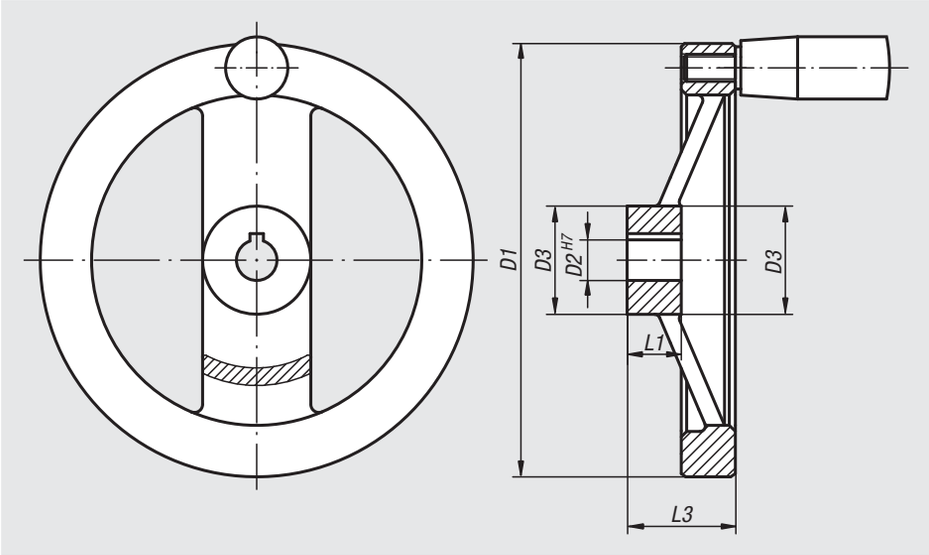

Material:
Handwheels aluminium.
Cylinder grip black Duroplast PF 31-DIN 7708.
Hub galvanized steel.

Version:
Black, powder-coated.
Wheel rim turned.
Radial and axial run-out of rim < IT 12.

Sample order:
nlm 06277-01080X10

On request:
Hubs with square socket or plastic-coated handwheels.

DIN 6885-1

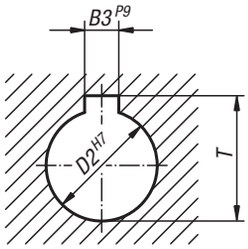

Handwheels 2-spoke, aluminium, flat wheel rim, without grip

Order No. without slot	Order No. with slot	D1	D2 series 1	D2 series 2	D3	L1	L3	B3 series 1	B3 series 2	T series 1	T series 2
06277-01080X10	**06277-11080X10**	80	10	-	24	16	28	3	-	11,4	-
06277-01080X12	**06277-11080X12**	80	-	12	24	16	28	-	4	-	13,8
06277-01100X10	**06277-11100X10**	100	10	-	26	17	33	3	-	11,4	-
06277-01100X12	**06277-11100X12**	100	-	12	26	17	33	-	4	-	13,8
06277-01125X12	**06277-11125X12**	125	12	-	31	18	33,5	4	-	13,8	-
06277-01125X14	**06277-11125X14**	125	-	14	31	18	33,5	-	5	-	16,3
06277-01160X14	**06277-11160X14**	160	14	-	36	20	39	5	-	16,3	-
06277-01160X16	**06277-11160X16**	160	-	16	36	20	39	-	5	-	18,3
06277-01200X18	**06277-11200X18**	200	18	-	42	24	45	6	-	20,8	-
06277-01200X20	**06277-11200X20**	200	-	20	42	24	45	-	6	-	22,8
06277-01250X22	**06277-11250X22**	250	22	-	48	28	51	6	-	24,8	-
06277-01250X26	**06277-11250X26**	250	-	26	48	28	51	-	8	-	29,3

Handwheels 2-spoke

flat rim, aluminium

Handwheels 2-spoke, aluminium, flat wheel rim, with fixed cylinder grip

Order No. without slot	Order No. with slot	D1	D2 series 1	D2 series 2	D3	L1	L3	B3 series 1	B3 series 2	T series 1	T series 2	Fixed cylinder grip
06277-21080X10	06277-31080X10	80	10	-	24	16	28	3	-	11,4	-	ø18 x M6 x 40
06277-21080X12	06277-31080X12	80	-	12	24	16	28	-	4	-	13,8	ø18 x M6 x 40
06277-21100X10	06277-31100X10	100	10	-	26	17	33	3	-	11,4	-	ø18 x M6 x 40
06277-21100X12	06277-31100X12	100	-	12	26	17	33	-	4	-	13,8	ø18 x M6 x 40
06277-21125X12	06277-31125X12	125	12	-	31	18	33,5	4	-	13,8	-	ø21 x M8 x 50
06277-21125X14	06277-31125X14	125	-	14	31	18	33,5	-	5	-	16,3	ø21 x M8 x 50
06277-21160X14	06277-31160X14	160	14	-	36	20	39	5	-	16,3	-	ø26 x M10 x 80
06277-21160X16	06277-31160X16	160	-	16	36	20	39	-	5	-	18,3	ø26 x M10 x 80
06277-21200X18	06277-31200X18	200	18	-	42	24	45	6	-	20,8	-	ø26 x M10 x 80
06277-21200X20	06277-31200X20	200	-	20	42	24	45	-	6	-	22,8	ø26 x M10 x 80
06277-21250X22	06277-31250X22	250	22	-	48	28	51	6	-	24,8	-	ø28 x M12 x 90
06277-21250X26	06277-31250X26	250	-	26	48	28	51	-	8	-	29,3	ø28 x M12 x 90

Handwheels 2-spoke, aluminium, flat wheel rim, with revolving cylinder grip

Order No. without slot	Order No. with slot	D1	D2 series 1	D2 series 2	D3	L1	L3	B3 series 1	B3 series 2	T series 1	T series 2	Revolving cylinder grip
06277-41080X10	06277-51080X10	80	10	-	24	16	28	3	-	11,4	-	ø18 x M6 x 40
06277-41080X12	06277-51080X12	80	-	12	24	16	28	-	4	-	13,8	ø18 x M6 x 40
06277-41100X10	06277-51100X10	100	10	-	26	17	33	3	-	11,4	-	ø18 x M6 x 40
06277-41100X12	06277-51100X12	100	-	12	26	17	33	-	4	-	13,8	ø18 x M6 x 40
06277-41125X12	06277-51125X12	125	12	-	31	18	33,5	4	-	13,8	-	ø22 x M8 x 56
06277-41125X14	06277-51125X14	125	-	14	31	18	33,5	-	5	-	16,3	ø22 x M8 x 56
06277-41160X14	06277-51160X14	160	14	-	36	20	39	5	-	16,3	-	ø26 x M10 x 80
06277-41160X16	06277-51160X16	160	-	16	36	20	39	-	5	-	18,3	ø26 x M10 x 80
06277-41200X18	06277-51200X18	200	18	-	42	24	45	6	-	20,8	-	ø26 x M10 x 80
06277-41200X20	06277-51200X20	200	-	20	42	24	45	-	6	-	22,8	ø26 x M10 x 80
06277-41250X22	06277-51250X22	250	22	-	48	28	51	6	-	24,8	-	ø31 x M12 x 102
06277-41250X26	06277-51250X26	250	-	26	48	28	51	-	8	-	29,3	ø31 x M12 x 102

Handwheels disc

similar to DIN 950, aluminium

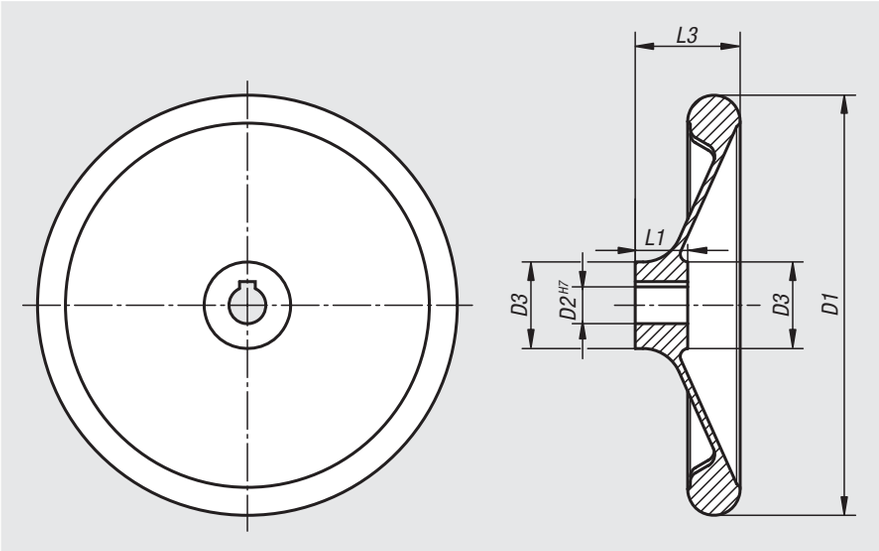

Material:
Handwheel aluminium.

Version:
Wheel rim turned and polished.
Radial and axial run-out of rim < IT 12.

Sample order:
nlm 06279-0080X10

On request:
Hubs with square socket or plastic-coated handwheels.

DIN 6885-1

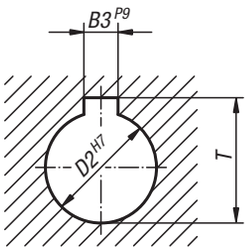

Order No. without slot	Order No. with slot	D1	D2 series 1	D2 series 2	D3	L1	L3	B3 series 1	B3 series 2	T series 1	T series 2
06279-0080X10	**06279-1080X10**	80	10	-	25	16	30	3	-	11,4	-
06279-0080X12	**06279-1080X12**	80	-	12	25	16	30	-	4	-	13,8
06279-0100X10	**06279-1100X10**	100	10	-	28	17	31	3	-	11,4	-
06279-0100X12	**06279-1100X12**	100	-	12	28	17	31	-	4	-	13,8
06279-0120X12	**06279-1120X12**	120	12	-	27	18	30	4	-	13,8	-
06279-0120X14	**06279-1120X14**	120	-	14	27	18	30	-	5	-	16,3
06279-0160X14	**06279-1160X14**	160	14	-	34	20	40	5	-	16,3	-
06279-0160X16	**06279-1160X16**	160	-	16	34	20	40	-	5	-	18,3
06279-0200X18	**06279-1200X18**	200	18	-	40	24	44	6	-	20,8	-
06279-0200X22	**06279-1200X22**	200	-	22	40	24	44	-	6	-	24,8
06279-0250X22	**06279-1250X22**	250	22	-	49	28	61	6	-	24,8	-
06279-0250X26	**06279-1250X26**	250	-	26	49	28	61	-	8	-	29,3
06279-0280X24	**06279-1280X24**	280	24	-	51	30	38	8	-	27,3	-
06279-0280X28	**06279-1280X28**	280	-	28	51	30	38	-	8	-	31,3
06279-0360X28	**06279-1360X28**	360	28	-	63	35	73	8	-	31,3	-
06279-0360X32	**06279-1360X32**	360	-	32	63	35	73	-	10	-	35,3

Handwheels disc

with revolving grip

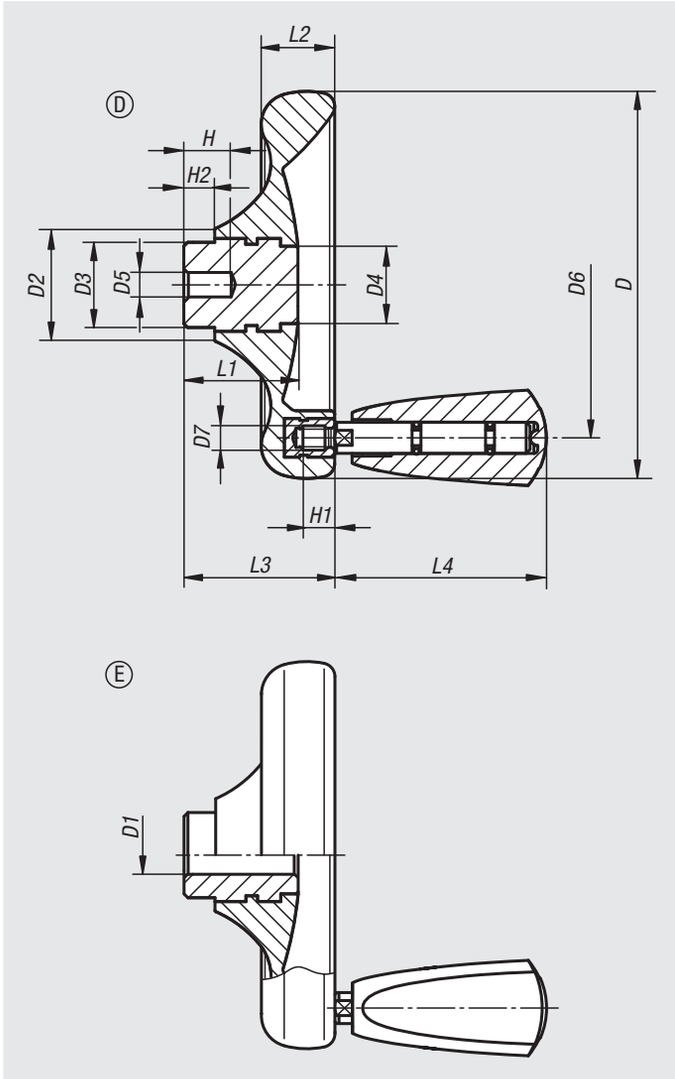

Material:
Duroplast PF 31, black.
Hubs nickel-plated steel or bright stainless steel 1.4305.
Revolving grip, metal parts nickel-plated or stainless steel 1.4305, bright.

Version:
High-gloss polished.

Sample order:
nlm 06287-0125X08

Note:
The handwheel is supplied with the grip loose.

On request:
Other reamed holes.

Drawing reference:
Form D: pre-drilled
Form E: with reamed hole

Handwheels disc, with revolving grip

Order No. Form D	Order No. Form E	Size	D	D1	D2	D3	D4	D5	D6	D7	H	H1	H2	L1	L2	L3	L4
06287-0100X06	**06287-1100X10**	1	100	-/10 H8	29	22	20	6/-	79	M6	12/-	9	8	29,5	19	39	54,7
06287-0125X08	**06287-1125X12**	2	125	-/12 H8	34	26	21	8/-	101	M6	15/-	9	8	34	24	46	54,7
06287-0140X08	**06287-1140X14**	3	140	-/14 H8	39	30	25	8/-	110	M8	16/-	12	8	38,5	27	52	82,2
06287-0160X10	**06287-1160X16**	4	160	-/16 H8	43	33	30	10/-	128	M8	20/-	12	8	41,3	30,1	57	82,2
-	**06287-1160X18**	4	160	18 H8	43	33	30	-	128	M8	-	12	8	41,3	30,1	57	82,2

Handwheels disc, with revolving grip, metal parts stainless steel

Order No. Form D	Order No. Form E	Size	D	D1	D2	D3	D4	D5	D6	D7	H	H1	H2	L1	L2	L3	L4
06287-2100X06	**06287-3100X10**	1	100	-/10 H7	29	22	20	6/-	79	M6	12/-	9	8	29,5	19	39	54,7
06287-2125X08	**06287-3125X12**	2	125	-/12 H7	34	26	21	8/-	101	M6	15/-	9	8	34	24	46	54,7
06287-2140X08	**06287-3140X14**	3	140	-/14 H7	39	30	25	8/-	110	M8	16/-	12	8	38,5	27	52	82,2
06287-2160X10	**06287-3160X16**	4	160	-/16 H7	43	33	30	10/-	128	M8	20/-	12	8	41,3	30,1	57	82,2
-	**06287-3160X18**	4	160	18 H7	43	33	30	-	128	M8	-	12	8	41,3	30,1	57	82,2

Handwheels disc

without grip

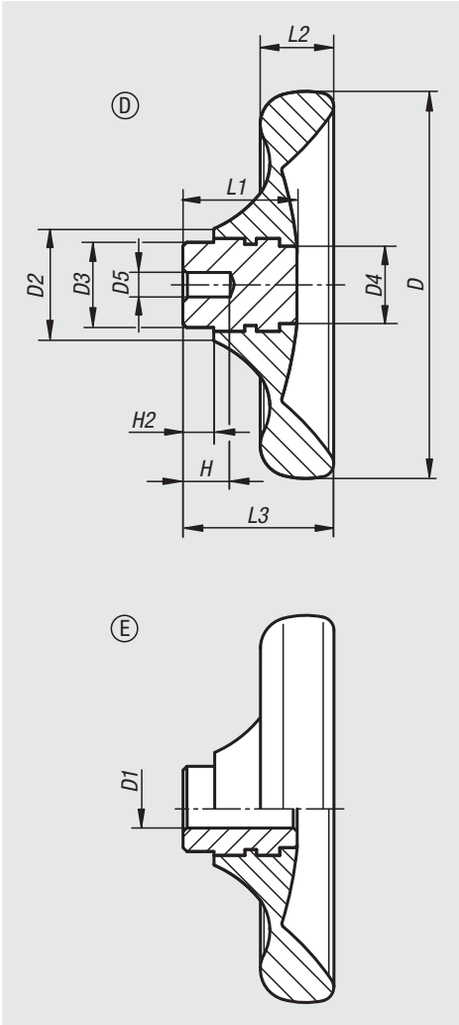

Material:
Black Duroplast PF 31.
Hub nickel-plated steel or bright stainless steel 1.4305.

Version:
High-gloss polished.

Sample order:
nlm 06288-0100X06

On request:
Other reamed holes.

Drawing reference:
Form D: pre-drilled
Form E: with reamed hole

Handwheels disc, without grip, bush steel

Order No. Form D	Order No. Form E	Size	D	D1	D2	D3	D4	D5	H	H2	L1	L2	L3
06288-0100X06	**06288-1100X10**	1	100	-/10 H8	29	22	20	6/-	12/-	8	29,5	19	39
06288-0125X08	**06288-1125X12**	2	125	-/12 H8	34	26	21	8/-	15/-	8	34	24	46
06288-0140X08	**06288-1140X14**	3	140	-/14 H8	39	30	25	8/-	16/-	8	38,5	27	52
06288-0160X10	**06288-1160X16**	4	160	-/16 H8	43	33	30	10/-	20/-	8	41,3	30,1	57
-	**06288-1160X18**	4	160	18 H8	43	33	30	-	-	8	41,3	30,1	57

Handwheels disc, without grip, bush stainless steel

Order No. Form D	Order No. Form E	Size	D	D1	D2	D3	D4	D5	H	H2	L1	L2	L3
06288-2100X06	**06288-3100X10**	1	100	-/10 H7	29	22	20	6/-	12/-	8	29,5	19	39
06288-2125X08	**06288-3125X12**	2	125	-/12 H7	34	26	21	8/-	15/-	8	34	24	46
06288-2140X08	**06288-3140X14**	3	140	-/14 H7	39	30	25	8/-	16/-	8	38,5	27	52
06288-2160X10	**06288-3160X16**	4	160	-/16 H7	43	33	30	10/-	20/-	8	41,3	30,1	57
-	**06288-3160X18**	4	160	18 H7	43	33	30	-	-	8	41,3	30,1	57

Machine handles fixed

steel, similar to DIN 39

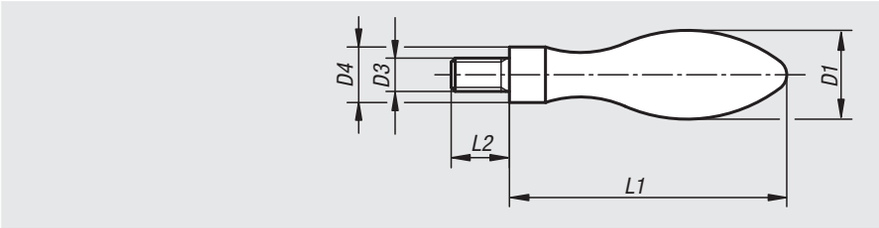

Material:
Steel.

Version:
Polished.

Sample order:
nlm 06290-216

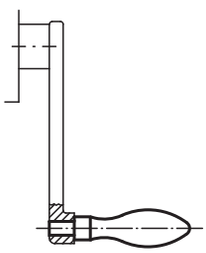

Order No.	D1	D3	D4	L1	L2
06290-213	13	M5	8	40	10
06290-216	16	M6	10	50	13
06290-220	20	M8	13	64	15
06290-225	25	M10	16	80	18
06290-232	32	M12	20	100	20

Machine handles fixed

steel, DIN 39 Form E

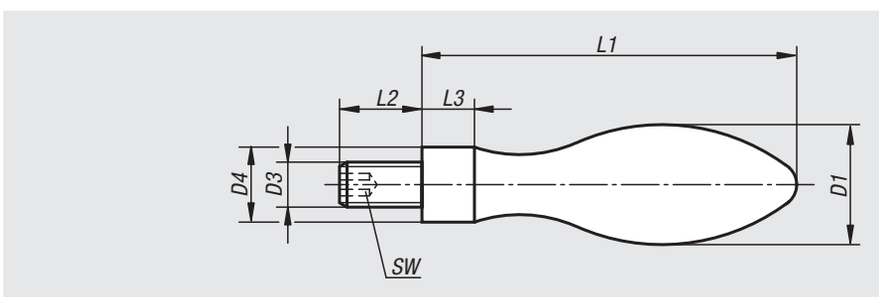

Material:
Grip and screw steel.

Version:
Grip and axle part galvanized and blue passivated.

Sample order:
nlm 06291-0616050

Note:
Machine handle suitable for DIN 950 handwheels.

Order No.	D1	D3	D4	L1	L2	L3	SW
06291-0616050	16	M6	10	50	11	7	3
06291-0820064	20	M8	13	64	13	8	4
06291-1025080	25	M10	16	80	14	10	5
06291-1232100	32	M12	20	100	21	13	6
06291-1636112	36	M16	22	112	26	14	8

06292

Machine handles fixed

aluminium, DIN 39 Form E

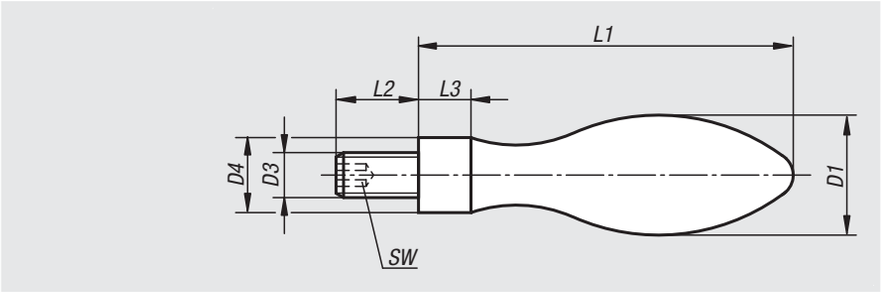

Material:
Grip aluminium.
Screw steel.

Version:
Grip polished.
Screw black.

Sample order:
nlm 06292-0616050

Note:
Machine handle suitable for DIN 950 handwheels.

Order No.	D1	D3	D4	L1	L2	L3	SW
06292-0616050	16	M6	10	50	11	7	3
06292-0820064	20	M8	13	64	13	8	4
06292-1025080	25	M10	16	80	14	10	5
06292-1232100	32	M12	20	100	21	13	6
06292-1636112	36	M16	22	112	26	14	8

06293

Machine handles, fixed,

DIN 39 Form E, stainless steel

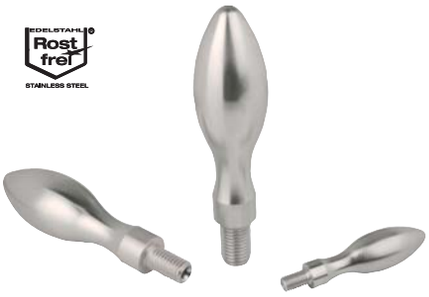

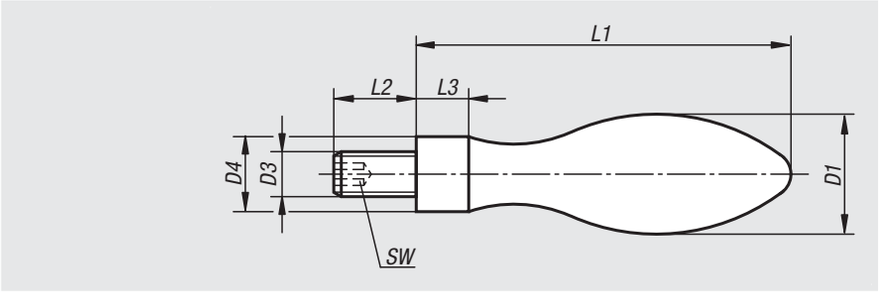

Material:
1.4305 or 1.4401 stainless steel.

Version:
Electropolished.

Sample order:
nlm 06293-0616050

Note:
1.4401 stainless steel, similar to DIN 39
Grip suitable for DIN 950 handwheels.

Order No.	Steel code	D1	D3	D4	L1	L2	L3	SW
06293-0616050	**1.4305**	16	M6	10	50	11	7	3
06293-0820064	**1.4305**	20	M8	13	64	13	8	4
06293-1025080	**1.4305**	25	M10	16	80	14	10	5
06293-10616050	**1.4401**	16	M6	11	51	13	5,1	-
06293-10820064	**1.4401**	21	M8	14	67	14	8,75	-
06293-11025080	**1.4401**	25	M10	16	81	18	9,75	-

Machine handles revolving

similar to DIN 98 Form E, steel

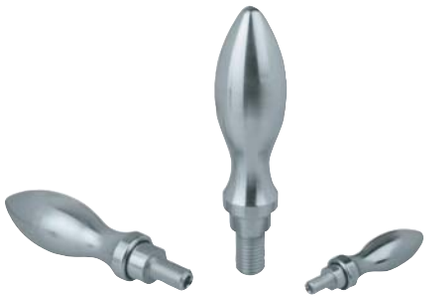

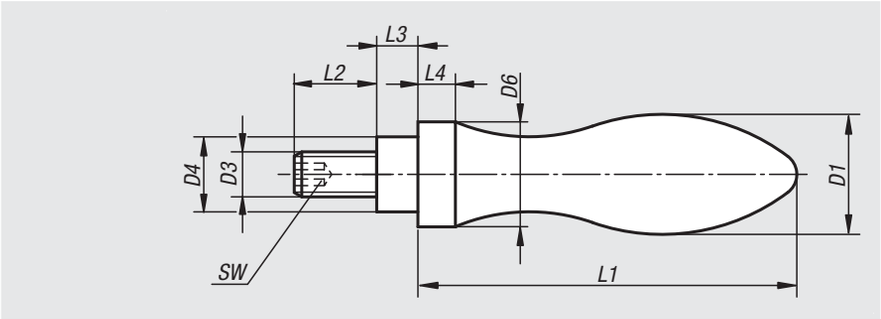

Material:
Grip and screw steel.

Version:
Grip and axle part galvanized and blue passivated.

Sample order:
nlm 06308-0616055

Note:
Machine handles with D1=25 mm and 32 mm have a thread length L2 that is shorter than the length specified in DIN 98. Machine handles are suitable for DIN 950 handwheels.

Order No.	D1	D3	D4	D6	L1	L2	L3	L4	SW
06308-0616055	16	M6	10	14	49	11	5,5	5	3
06308-0820067	20	M8	13	18	61	13	6	6	4
06308-1025083	25	M10	16	21	75	13	8	6,5	5
06308-1232105	32	M12	20	26	95	16	10,5	8	6
06308-1636117	36	M16	22	29	106	26	11	9	8

06309

Machine handles revolving

aluminium, similar to DIN 98 Form E

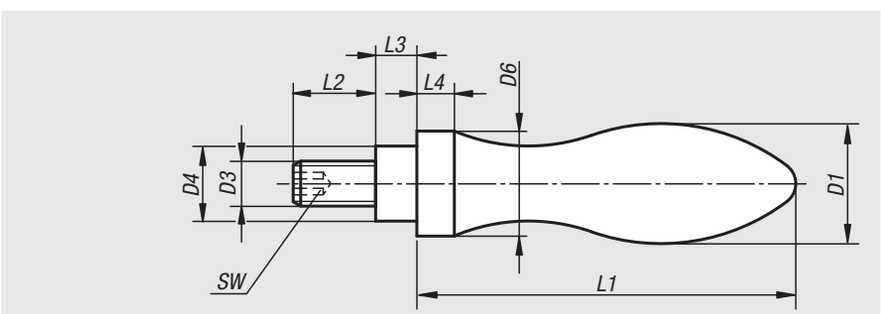

Material:
Grip aluminium.
Screw steel.

Version:
Grip polished, axle part galvanized and blue passivated.

Sample order:
nlm 06309-0616055

Note:
Machine handle suitable for DIN 950 handwheels.

Order No.	D1	D3	D4	D6	L1	L2	L3	L4	SW
06309-0616055	16	M6	10	14	49	11	5,5	5	3
06309-0820067	20	M8	13	18	61	13	6	6	4
06309-1025083	25	M10	16	21	75	13	8	6,5	5
06309-1232105	32	M12	20	26	95	16	10,5	8	6
06309-1636117	36	M16	22	29	106	26	11	9	8

Machine handles

revolving similar to DIN 98 Form E, stainless steel

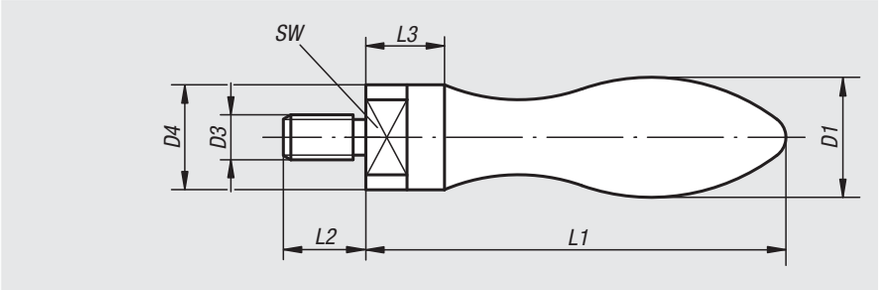

Material:
Stainless steel 1.4401.

Version:
Polished

Sample order:
nlm 06309-01-10616050

Note:
Machine handle suitable for DIN 950 handwheels.

Order No.	D1	D3	D4	L1	L2	L3	SW
06309-01-10616050	16	M6	11	57	12	11,45	8
06309-01-10820064	21	M8	14	71	14	13,45	10
06309-01-11025080	25	M10	16	86	16	14,45	11

Notes

06310

Machine handles revolving

steel, similar to DIN 98

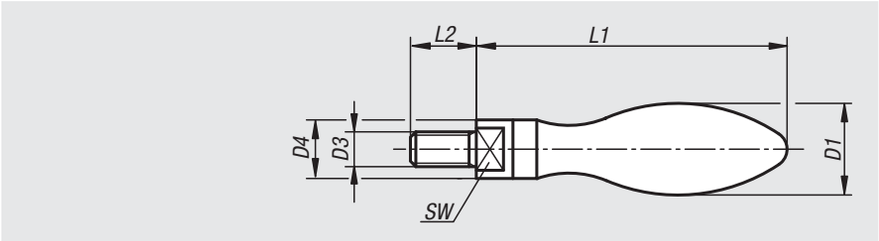

Material:
Steel.

Version:
Polished.

Sample order:
nlm 06310-225

Order No.	D1	D3	D4	L1	L2	SW
06310-216	16	M6	10	53	13	8
06310-220	20	M8	13	66	15	10
06310-225	25	M10	16	85	18	13
06310-232	32	M12	20	107	20	17

06311

Machine handles fixed

straight form, similar to DIN 39

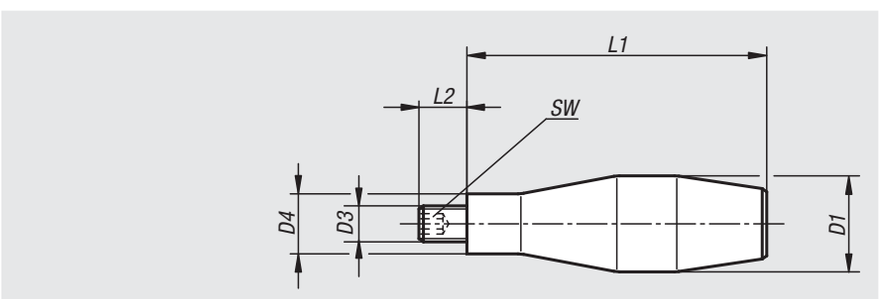

Material:
Aluminium.
Screw, steel.

Version:
Polished handle, glossy finish.

Sample order:
nlm 06311-20

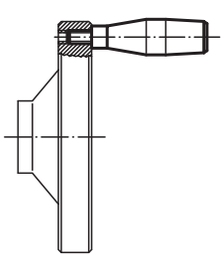

Order No.	D1	D3	D4	L1	L2	SW
06311-16	16	M6	10	52	11	3
06311-20	20	M8	13	66	13	4
06311-25	25	M10	16	80	14	5
06311-29	32	M12	20	100	16	6

06312

Machine handles revolving

straight form, similar to DIN 98

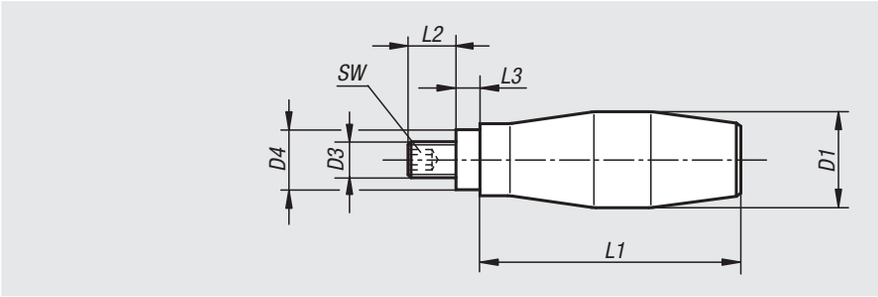

Material:
Aluminium.
Axle, steel

Version:
Grip, high-gloss polished.

Sample order:
nlm 06312-24

Order No.	D1	D3	D4	L1	L2	SW
06312-20	20	M8	13	60	13	4
06312-24	24	M10	16	70	13	5
06312-31	31	M12	20	88	16	6

06313

Machine handles revolving

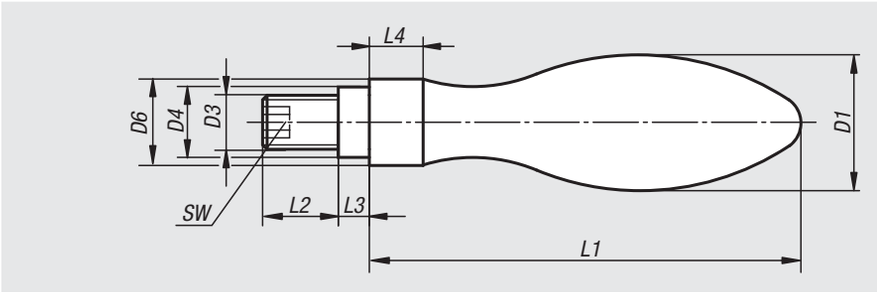

Material:
Grip thermoplastic or Duroplast.
Axle steel.

Version:
Grip black.
Steel chromed.

Sample order:
nlm 06313-208

Order No.	Material	D1	D3	D4	D6	L1	L2	L3	L4	SW
06313-206	Duroplast	16	M6	10	14	49	11	5,5	5	3
06313-208	Duroplast	20	M8	13	18	61	13	6	6	4
06313-210	thermoplastic	25	M10	16	21	75	14	8	6,5	5
06313-212	thermoplastic	32	M12	20	26	95	21	10,5	8	6

Conical grip

revolving

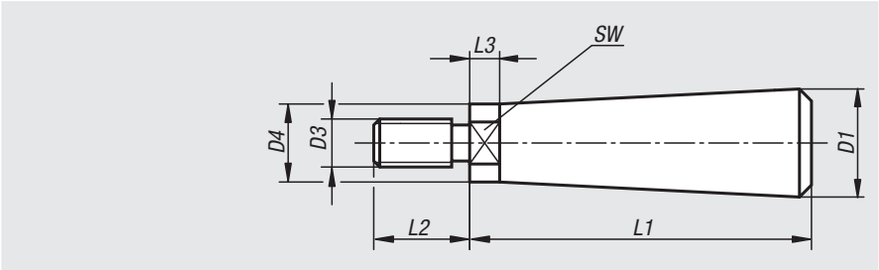

Material:
Black Duroplast PF 31.
Axle steel.

Version:
Axle galvanized.

Sample order:
nlm 06314-18

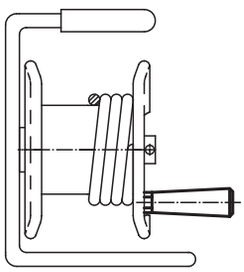

Order No.	D1	D3	D4	L1	L2	L3	SW
06314-18	18	M8	13	57	16	5	11
06314-23	20	M10	16	69	20	5	13

Taper grips

fixed

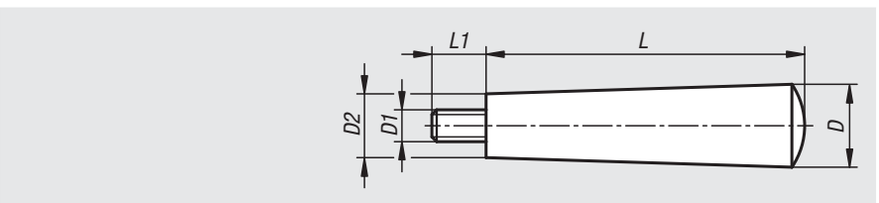

Material:
Black Duroplast PF 31.
Screw galvanized steel.

Version:
High-gloss polished.

Sample order:
nlm 06315-120408

Order No.	D	D1	D2	L	L1
06315-120408	12	M4	9	40	8
06315-150507	15	M5	11	50	7
06315-180608	18	M6	13	64	8
06315-210610	21	M6	15	72	10
06315-210810	21	M8	15	72	10
06315-250810	25	M8	17	90	10
06315-261012	26	M10	20	100	12

Taper grips

revolving

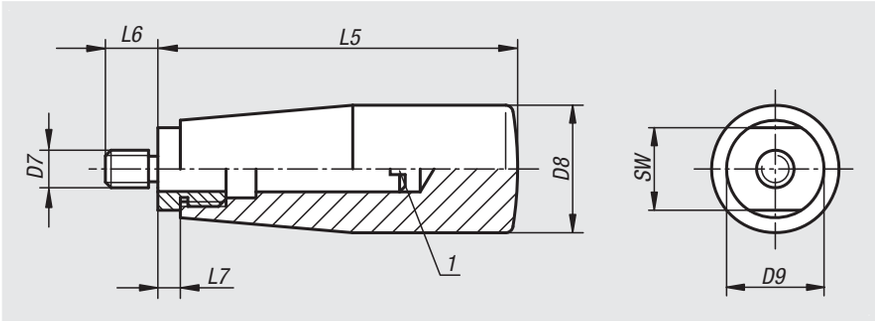

Material:
Black Duroplast PF 31.
Axle and threaded bush galvanized steel or bright stainless steel.

Version:
High-gloss polished.

Sample order:
nlm 06316-105007

Note:
To mount unscrew the axle.

Drawing reference:
1) mounting aid

Order No. steel	Order No. stainless steel	Size	D7	D8	D9	L5	L6	L7	SW
06316-105007	**06316-1105007**	1	M5	17	15	51	7	5	13
06316-206008	**06316-1206008**	2	M6	23	18	68	8	6	16
06316-208009	**06316-1208009**	2	M8	23	18	68	9	6	16
06316-310011	**06316-1310011**	3	M10	28	21	77	11	7	19

06316

Taper grips

revolving

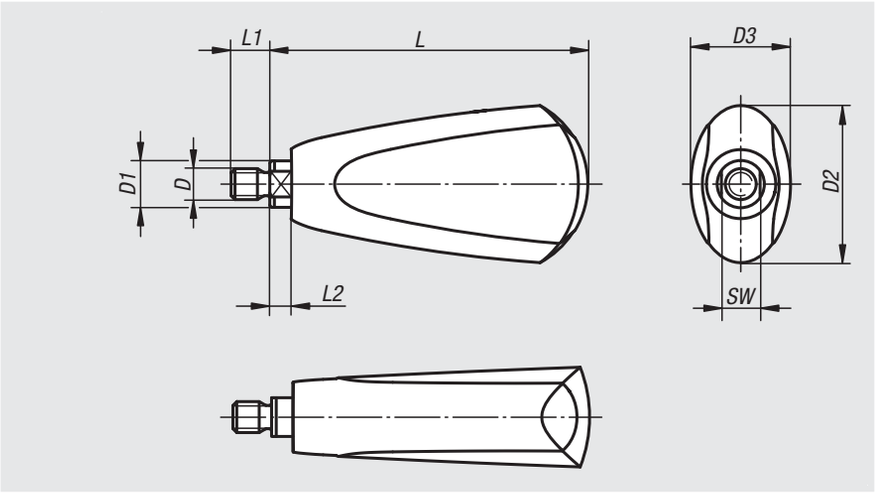

Material:
Duroplast PF 31, black.
Axle steel, nickel-plated or bright stainless steel 1.4305.
Snap ring stainless steel 1.4310.

Version:
High-gloss polished.

Sample order:
nlm 06316-106009

Note:
The grips are suitable for disc handwheels with revolving taper grip 06287.

Order No. steel	Order No. stainless steel	Size	D	D1	D2	D3	L	L1	L2	SW
06316-106009	**06316-1106009**	1	M6	8	25	18	54,7	9	4,5	7
06316-208010	**06316-1208010**	2	M8	12	41	26	82,2	10	5,5	10

06317

Cylindrical grips revolving

stainless steel

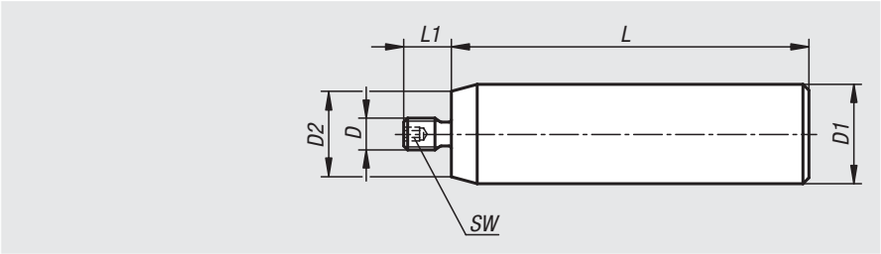

Material:
Axis stainless steel 1.4305.
Revolving grip stainless steel 1.4305.
Snap ring stainless-steel 1.4310.

Version:
Bright.

Sample order:
nlm 06317-105

Assembly:
Screw in using hexagon socket in axis.

Order No.	D	D1	D2	L	L1	SW
06317-105	M5	16	12,5	60	8	3
06317-206	M6	20	16,5	72	9	3
06317-308	M8	25	21,5	90	12	3

06318

Conical grips

revolving

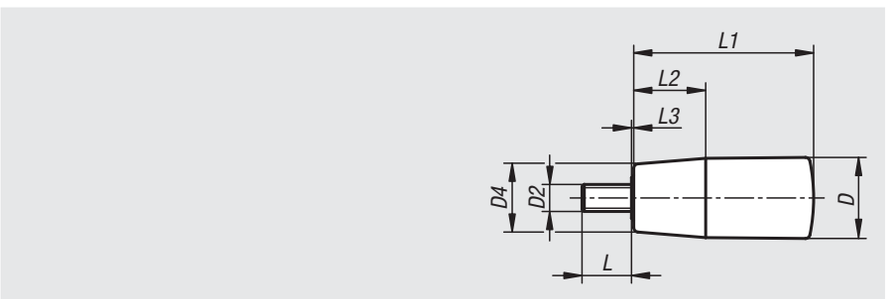

Material:
Duroplast PF 31, black.
Axle galvanised steel or bright stainless.

Version:
High-gloss polished.

Sample order:
nlm 06318-10618

Note:
Cylindrical grips can be screwed onto our handwheels, crank handles etc.

Order No. steel	Order No. stainless steel	D	D2	D4	L	L1	L2	L3
06318-0618	**06318-10618**	18	M6	15	11	40	16	0,5
06318-0823	**06318-10823**	23	M8	19	13	65	24	0,5
06318-1028	**06318-11028**	28	M10	22	14	90	32	0,5

Taper grips

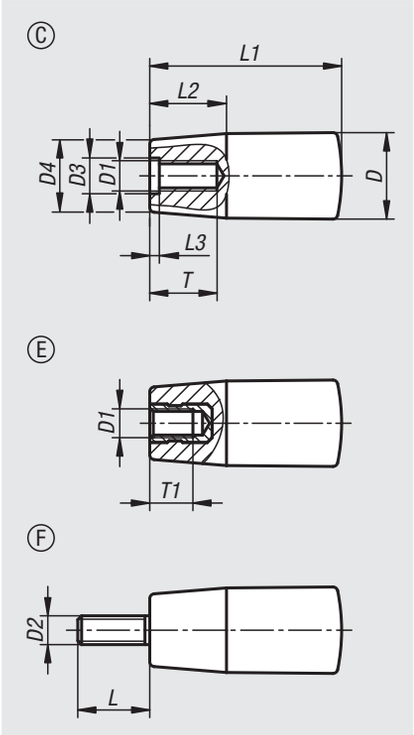

Material:
Duroplast PF 31, black.
Steel bush and stud, galvanized.

Version:
High-gloss polished.

Sample order:
nlm 06319-10818

On request:
Other colours.

Drawing reference:
Form C: moulded female thread
Form E: tapped bush
Form F: male thread

Taper grips with female thread

Order No.	Form	D	D1	D3	D4	L1	L2	L3	T	T1
06319-10618	C	18	M6	6,2	15	40	16	2	14	-
06319-10818	C	18	M8	8,5	15	40	16	2	18	-
06319-10823	C	23	M8	8,5	19	65	24	2	18	-
06319-11028	C	28	M10	10,5	22	90	32	3,5	22	-
06319-20518	E	18	M5	-	15	40	16	-	-	7,5
06319-20618	E	18	M6	-	15	40	16	-	-	9
06319-20823	E	23	M8	-	19	65	24	-	-	12
06319-20828	E	28	M8	-	22	90	32	-	-	12
06319-21028	E	28	M10	-	22	90	32	-	-	15

Taper grips with male thread

Order No.	Form	D	D2	D4	L	L1	L2
06319-30618	F	18	M6	15	15	40	16
06319-30823	F	23	M8	19	15	65	24
06319-31028	F	28	M10	22	15	90	32

Taper grips

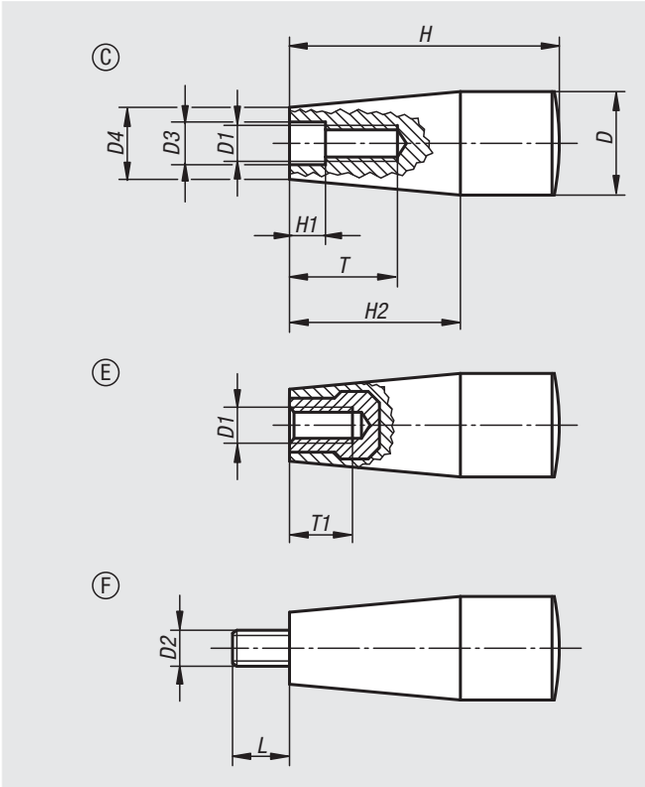

Material:
Duroplast PF 31, black.
Bush and stud galvanized steel.
Form E has copper-plated steel or brass bushes.

Version:
High-gloss polished.

Sample order:
nlm 06320-106

Note:
The versions 06320-205 and 06320-206 have a brass bush.
The versions 06320-208 and 06320-2081 have copper-plated steel bushes.

On request:
Other colours.

Drawing reference:
Form C: moulded female thread
Form E: tapped bush
Form F: male thread

Order No.	Form	D	D1	D3	D4	H	H1	H2	T	T1
06320-106	C	17	M6	6,2	15	45	2	26	14	-
06320-108	C	17	M8	8,2	13	45	2	26	16	-
06320-1081	C	23	M8	8,5	18	61	2	38	24	-
06320-110	C	29	M10	10,5	21	71	3,5	42	28	-
06320-205	E	17	M5	-	15	45	-	26	-	10
06320-206	E	17	M6	-	15	45	-	26	-	9
06320-208	E	23	M8	-	18	61	-	38	-	14
06320-2081	E	28	M8	-	21	71	-	42	-	14

Order No.	Form	D	D2	D4	H	H2	L
06320-306	F	17	M6	15	45	26	18
06320-308	F	23	M8	18	61	38	12
06320-310	F	29	M10	21	71	42	20

06321

Cylindrical grips revolving

with hexagon socket

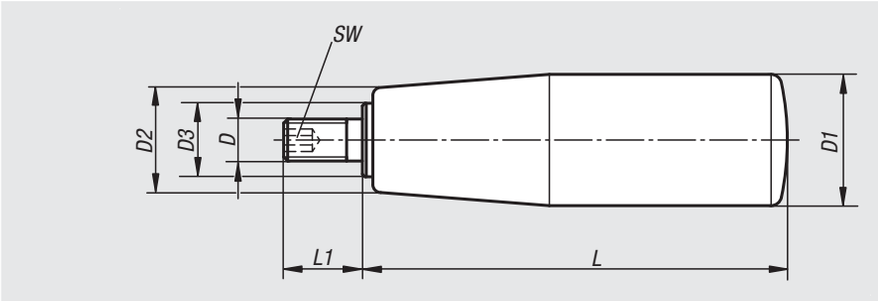

Material:
Grip thermoplastic.
Steel parts galvanized.

Version:
Black satin finished.

Sample order:
nlm 06321-06200520

Note:
Cylindrical grips can be screwed onto our handwheels, crank handles etc.

Order No.	D	D1	D2	D3	L	L1	SW
06321-06200520	M6	20	15	10	51	12	3
06321-06230620	M6	23	18	10	62	12	3
06321-08230620	M8	23	18	10	62	15	4
06321-08250720	M8	25	19	10	71	15	4
06321-10250720	M10	25	19	10	71	15	4
06321-08250810	M8	26	22	14	81	15	4
06321-10250810	M10	26	22	14	81	15	5
06321-12260820	M12	26	22	14	81	15	5
06321-10270930	M10	27	22	14	92	15	5
06321-12270930	M12	27	22	14	92	15	5

06322

Cylindrical grips revolving

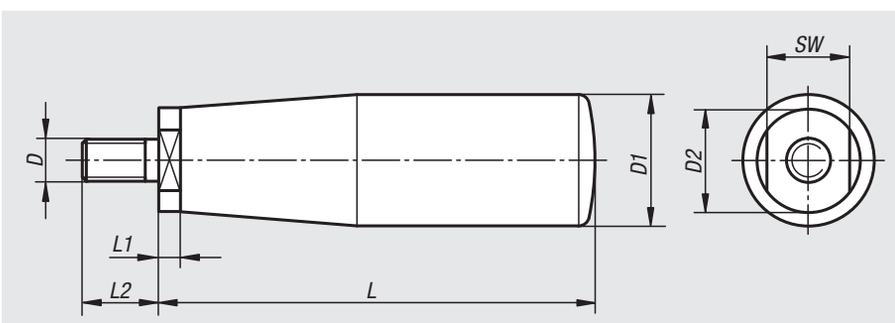

Material:
Grip thermoplastic.
Steel parts galvanized.

Version:
Black satin finished.

Sample order:
nlm 06322-06200500

Note:
Cylindrical grips can be screwed onto our handwheels, crank handles etc.

Order No.	D	D1	D2	L	L1	L2	SW
06322-06200500	M6	20	12	55	5	12	10
06322-08230600	M8	23	14	67	7	15	13
06322-08250690	M8	25	14	77	7	15	13
06322-10250690	M10	25	14	77	7	15	13
06322-10250800	M10	26	18	86	7	15	16
06322-10270890	M10	27	18	97	7	15	16
06322-12250800	M12	26	18	86	7	15	16
06322-12270890	M12	27	18	97	7	15	16

Cylindrical grips fold-down

Material:
Grip thermoplastic.
Steel parts black oxidised.

Version:
Black satin finished.

Sample order:
nlm 06323-06200490

Note:
Cylindrical grips can be screwed onto our handwheels, crank handles etc.

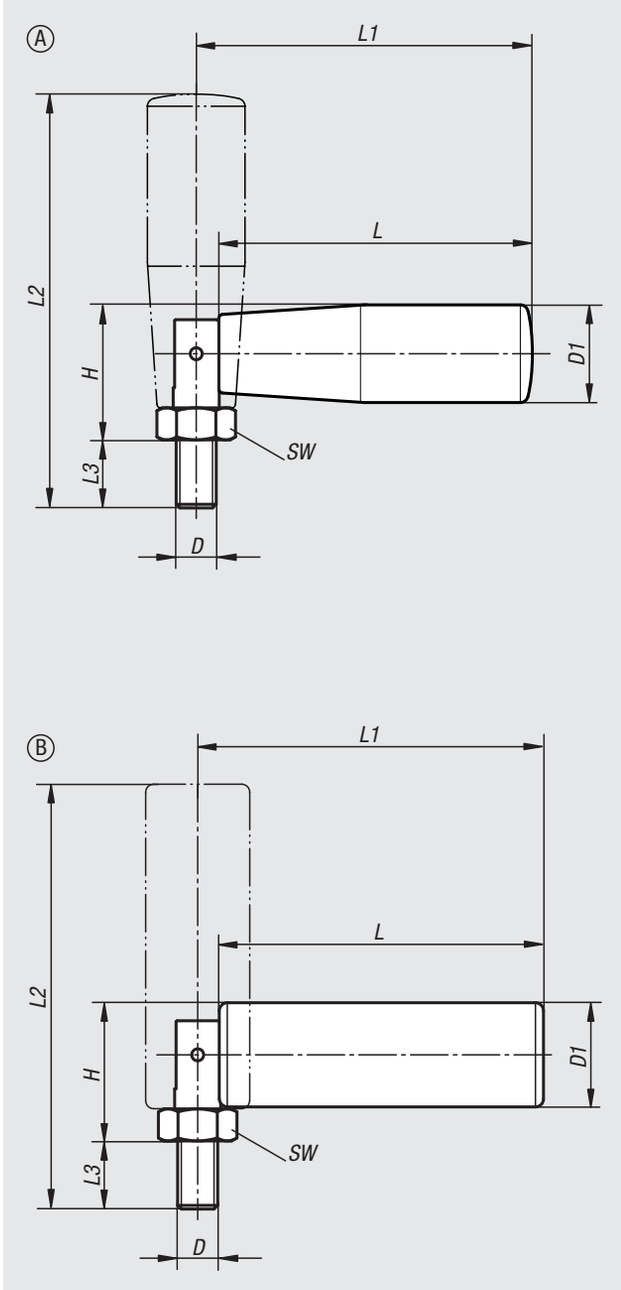

Order No.	Form	D	D1	SW	L	L1	L2	L3	H
06323-06200490	A	M6	20	10	49	53	63	9	24,5
06323-08250690	A	M8	25	13	70	74	87,5	11	28
06323-10260890	B	M10	26	17	90	96	114	16	34

Cylindrical grips revolving

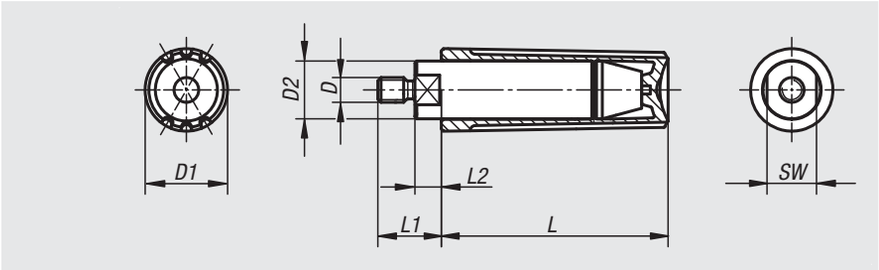

Material:
Black grey thermoplastic.

Version:
Steel parts black oxidised.

Sample order:
nlm 06325-104

Note:
Cylindrical grips are supplied assembled and can be screwed onto our handwheels, crank handles etc.

Order No.	Size	D	D1	D2	L	L1	L2	SW
06325-104	1	M4	13	9	35	11	5	8
06325-205	2	M5	16	11	44	13	5,5	10
06325-306	3	M6	20	14	55	14	5	12
06325-408	4	M8	25	18	70,5	25	13	15

Notes

Cylindrical grips fold-down

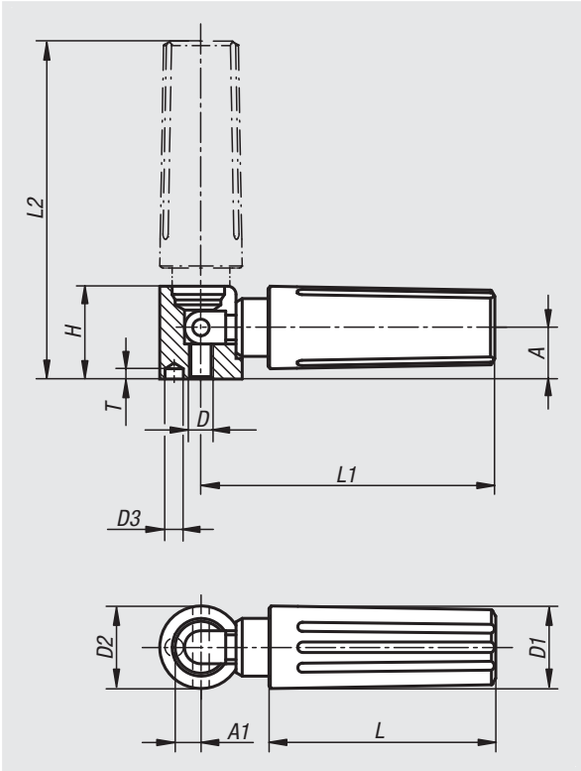

Material:
Black grey thermoplastic.

Version:
Steel parts black oxidised.

Sample order:
nlm 06326-104

Note:
Cylindrical grips are supplied assembled and can be screwed to our handwheels, crank handles etc.
The hole D3 is used for positioning.

Order No.	Size	D	D1	D2	D3	A	A1	H	L	L1	L2	T
06326-104	1	M4	13	13	2,5	8	4,3	14,5	35	47	54,5	4,5
06326-205	2	M5	16	16	3,5	10	5,3	18	44	58	67	4,5
06326-306	3	M6	20	20	4,5	12,5	6,5	22,5	55	71,5	82	6
06326-408	4	M8	25	26	5,5	16	9	29	70,5	98,5	112,5	6,5

Cylindrical grips

safety automatic return

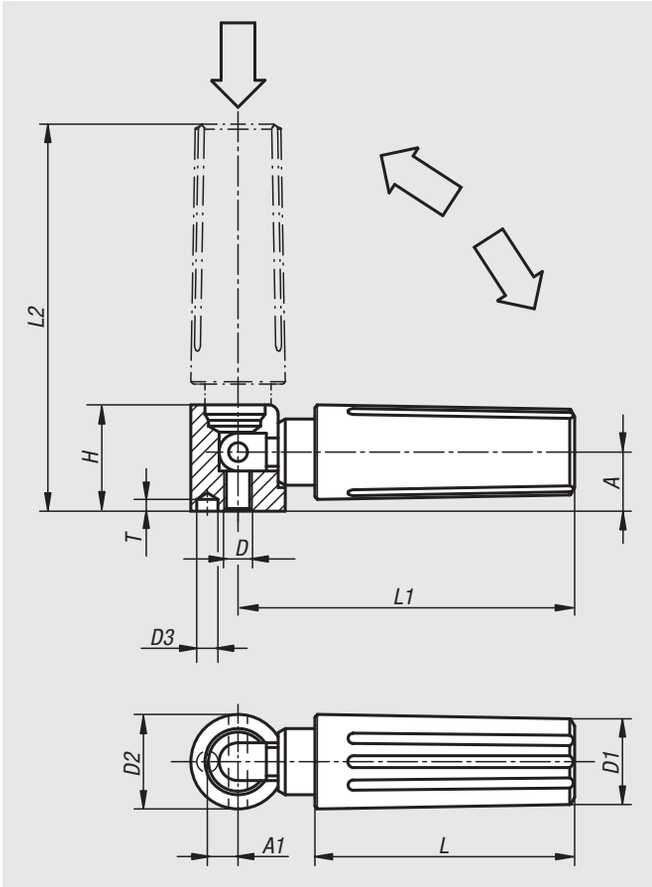

Material:
Grip black grey thermoplastic.

Version:
Steel parts black oxidised.

Sample order:
nlm 06328-104

Note:
Two actions must be made to bring the safety grip into an operating position:
- Swing the grip out until it stops (90°).
- Push the grip in until it locks.

The pushed-in position is the most comfortable for cranking. The grip swings back automatically after releasing.
Cylindrical grips are supplied assembled and can be screwed onto our handwheels, crank handles etc.
The hole D3 is used for positioning.

Order No.	Size	D	D1	D2	D3	A	A1	H	L	L1	L2	T
06328-104	1	M4	13	13	2,5	8	4,3	14,5	35	47	52,5	4,5
06328-205	2	M5	16	16	3,5	10	5,3	18	44	58	65,5	4,5
06328-306	3	M6	20	20	4,5	12,5	6,5	22,5	55	71,5	81	6
06328-408	4	M8	25	26	5,5	16	9	29	70,5	98,5	111	6,5

Levers 20°

DIN 99

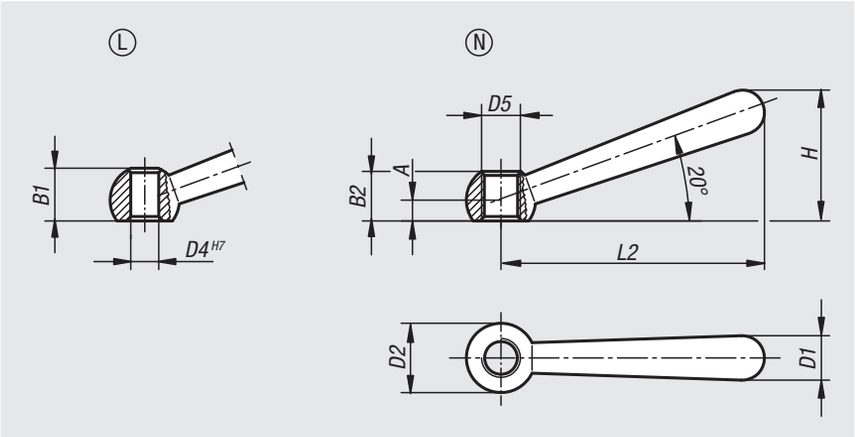

Material:
Steel.

Version:
Polished.

Sample order:
nlm 06330-212

Note:
To fix the lever to another element, gluing is often more cost-effective than pinning.

Drawing reference:
Form L: with hole
Form N: with internal thread

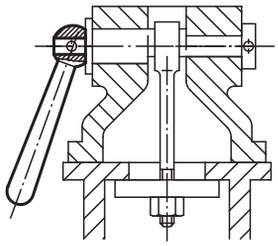

Order No. Form L	Order No. Form N	A	D4	D5	B1	B2	D1	D2 ball	L2	H
06330-106	**06330-206**	4	6/-	-/M6	9,5/-	-/9,5	8	12	48	24
06330-108	**06330-208**	5	8/-	-/M8	12/-	-/12	10	16	60	30,5
06330-110	**06330-210**	6	10/-	-/M10	14,5/-	-/14,5	13	20	76	38
06330-112	**06330-212**	7,5	12/-	-/M12	18,5/-	-/18,5	16	25	95	47
06330-116	**06330-216**	10	16/-	-/M16	24/-	-/24	20	32	119	59,5
06330-120	**06330-220**	12,5	20/-	-/M20	30/-	-/30	25	40	152	75,5

Tension lever

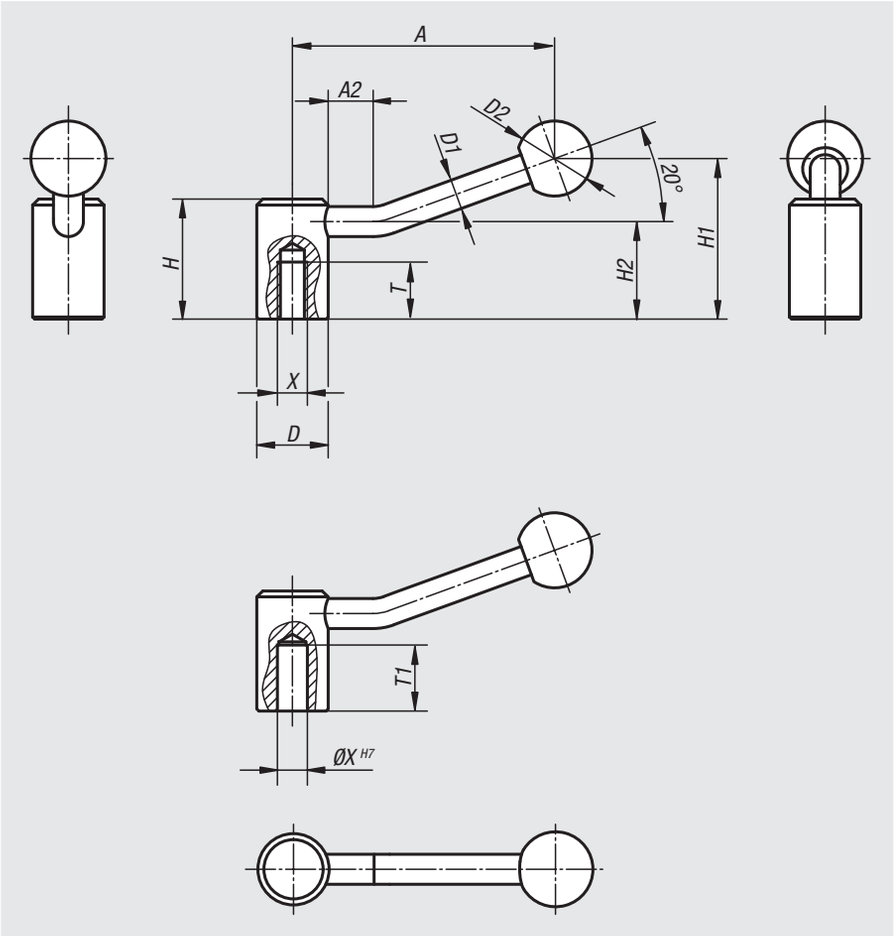

Material:
Steel parts grade 5.8.
Ball knob black plastic.

Version:
Black oxidised.

Sample order:
nlm 06340-208

Note:
Tension levers can be used for simple clamping or control operations.
Where applicable, there must be enough space available so that the grip can be rotated 360°.

On request:
Other internal threads, reamed holes and special versions.
Dimension “A” available in other lengths at extra charge.

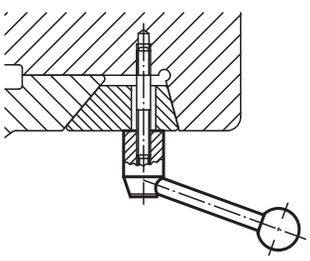

Order No.	Version	Size	X	T	T1	D	D1	D2	H	H1	H2	A	A2
06340-208	internal thread	1	M8	18	-	24	10	25	40	52,5	32,5	84,5	15
06340-210	internal thread	1	M10	19	-	24	10	25	40	52,5	32,5	84,5	15
06340-212	internal thread	2	M12	20	-	28	12	32	46	61	36,5	100	15
06340-216	internal thread	3	M16	23	-	33	13	32	52	72	41	121	15
06340-220	internal thread	4	M20	26	-	41	13	32	61	80	49	123	15
06340-108	reamed hole	1	8	-	22	24	10	25	40	52,5	32,5	84,5	15
06340-110	reamed hole	1	10	-	22	24	10	25	40	52,5	32,5	84,5	15
06340-112	reamed hole	2	12	-	25	28	12	32	46	61	36,5	100	15
06340-114	reamed hole	2	14	-	25	28	12	32	46	61	36,5	100	15
06340-116	reamed hole	3	16	-	28	33	13	32	52	72	41	121	15
06340-118	reamed hole	3	18	-	28	33	13	32	52	72	41	121	15
06340-120	reamed hole	4	20	-	32	41	13	32	61	80	49	123	15

Tension lever flat

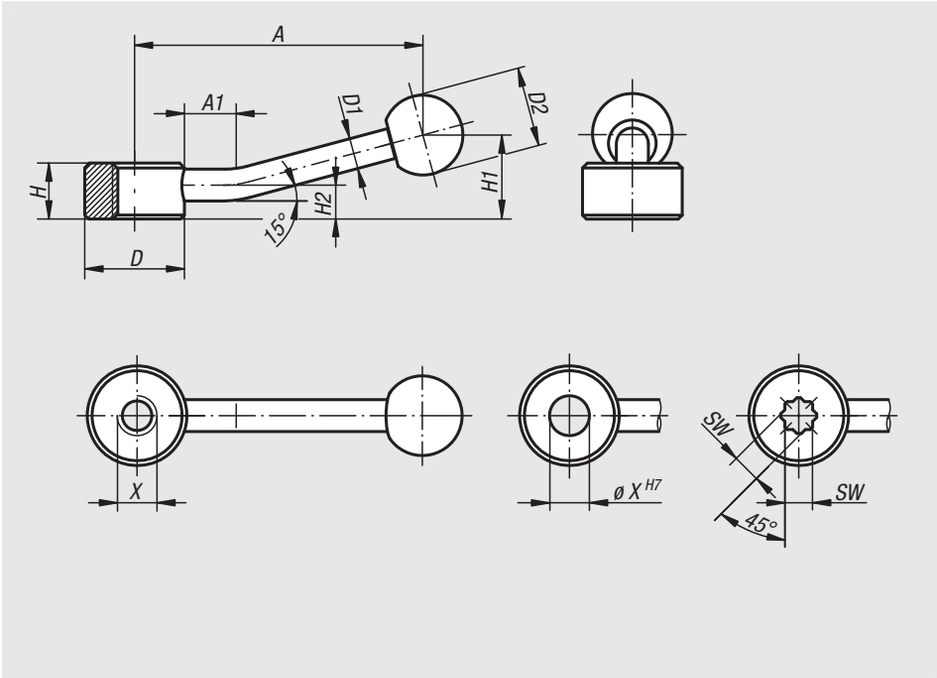

Material:
Steel parts grade 5.8.
Ball knob black Duroplast PF 31

Version:
Black oxidised.

Sample order:
nlm 06342-206

Note:
Flat tension levers can be used for simple clamping or control operations. Where applicable, there must be enough space available so that the grip can be rotated 360°.
The version with star socket is designed to allow a 45° change of position.

On request:
Other internal threads, reamed holes and star sockets.
Dimension “A” available in other lengths at extra charge.

Order No.	Version	Size	X	D	D1	D2	H	H1	H2	A	A1
06342-206	internal thread	1	M6	25	8	20	14	22	8,5	75	15
06342-208	internal thread	1	M8	25	8	20	14	22	8,5	75	15
06342-210	internal thread	1	M10	25	8	20	14	22	8,5	75	15
06342-212	internal thread	2	M12	33	10	25	17	27	10	100	15
06342-216	internal thread	2	M16	33	10	25	17	27	10	100	15
06342-220	internal thread	3	M20	41	12	30	20	36	11,5	128	15
06342-224	internal thread	3	M24	41	12	30	20	36	11,5	128	15

Order No.	Version	Size	X	D	D1	D2	H	H1	H2	A	A1
06342-106	reamed hole	1	6	25	8	20	14	22	8,5	75	15
06342-108	reamed hole	1	8	25	8	20	14	22	8,5	75	15
06342-110	reamed hole	1	10	25	8	20	14	22	8,5	75	15
06342-112	reamed hole	2	12	33	10	25	17	27	10	100	15
06342-116	reamed hole	2	16	33	10	25	17	27	10	100	15
06342-120	reamed hole	3	20	41	12	30	20	36	11,5	128	15
06342-124	reamed hole	3	24	41	12	30	20	36	11,5	128	15

Order No.	Version	Size	SW	D	D1	D2	H	H1	H2	A	A1
06342-305	star socket	1	5,5	25	8	20	14	22	8,5	75	15
06342-307	star socket	1	7	25	8	20	14	22	8,5	75	15
06342-309	star socket	2	9	33	10	25	17	27	10	100	15
06342-311	star socket	2	11	33	10	25	17	27	10	100	15
06342-314	star socket	3	14	41	12	30	20	36	11,5	128	15
06342-319	star socket	3	19	41	12	30	20	36	11,5	128	15

06349

Lock grips

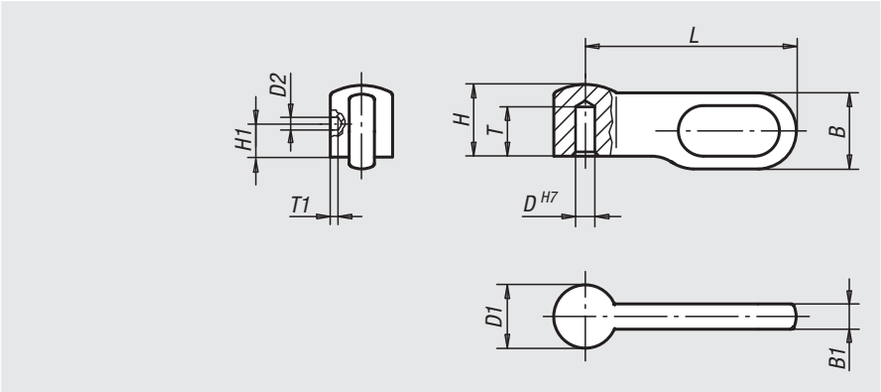

Material:
Stainless steel 1.4308 or steel.

Version:
Stainless steel bright.
Steel black oxidised.

Sample order:
nlm 06349-1040

Note:
Lock grips can be used as required. The styled design with recessed grip gives fingers a good purchase and is well suited to modern requirements. High clamping forces can be easily attained. Use the pilot hole in the side to secure the grip by pinning or screw.

Order No.	Main material	Size	B	B1	D	D1	D2	H	H1	L	T	T1
06349-1040	stainless steel	1	9	3	4	7,5	1,5	8,5	3	25	5,5	0,5
06349-2050	stainless steel	2	10,8	3,6	5	9	2	10,2	4	30	6,5	1
06349-3060	stainless steel	3	14,4	4,8	6	12	2	13,6	5	40	8,7	1
06349-4080	stainless steel	4	18	6	8	15	3	17	6	50	10,2	1
06349-1041	steel	1	9	3	4	7,5	1,5	8,5	3	25	5,5	0,5
06349-2051	steel	2	10,8	3,6	5	9	2	10,2	4	30	6,5	1
06349-3061	steel	3	14,4	4,8	6	12	2	13,6	5	40	8,7	1
06349-4081	steel	4	18	6	8	15	3	17	6	50	10,2	1

06350

Tension levers

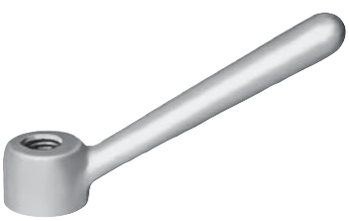

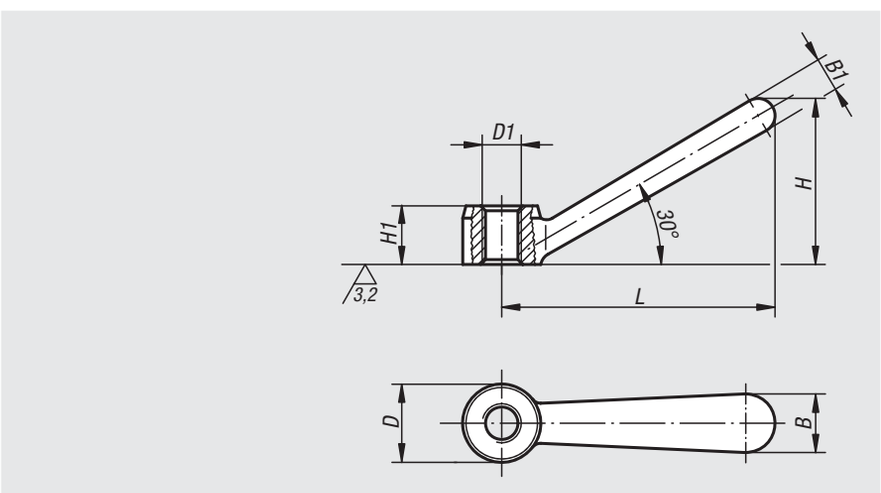

Material:
GJMW 400 malleable cast iron

Version:
Vibratory ground.
Bright.

Sample order:
nlm 06350-16

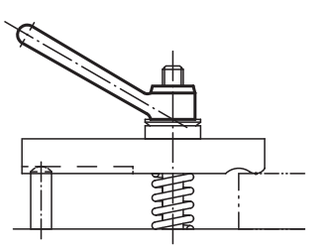

Order No.	D	D1	B	B1	H	H1	L
06350-08	16	M8	12	7	34	12	56
06350-10	20	M10	14	9	42,5	14	70
06350-12	25	M12	18	11	53	18	87
06350-16	32	M16	22	15	66,5	24	109
06350-20	40	M20	28	18	84,5	28	140

Ball grips revolving

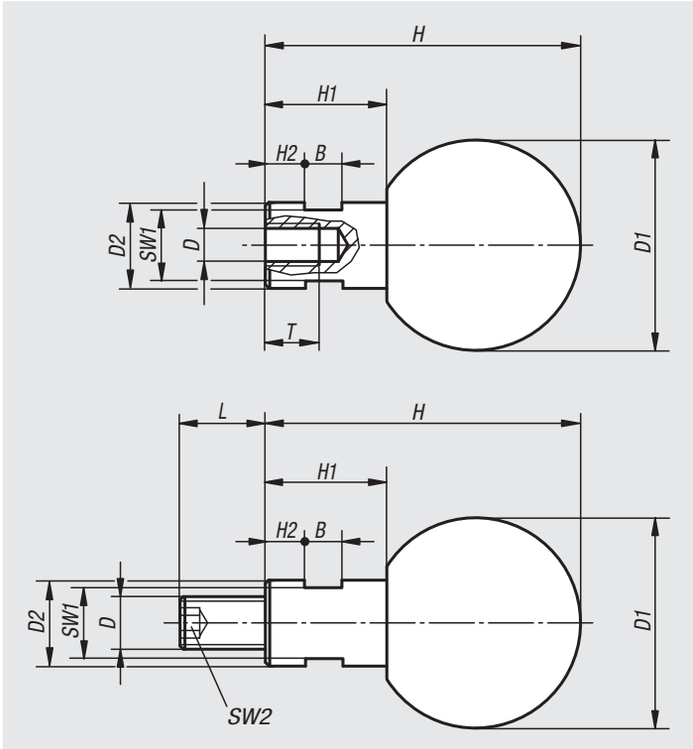

Material:
Ball Duroplast PF 31.
Bush and screw steel or stainless steel 1.4305.

Version:
Ball black glossy.
Steel blue passivated.
Stainless steel bright.

Sample order:
nlm 06353-061

Ball grips revolving with female thread

Order No. steel	Order No. stainless steel	D	D1	D2	T	H	H1	H2	B	SW1
06353-060	**06353-1060**	M6	25	10	12,5	37,5	15	5	5	8
06353-080	**06353-1080**	M8	32	13	15	48,5	19	6	6	10
06353-100	**06353-1100**	M10	40	16	19	61	24	8	8	13
06353-120	**06353-1120**	M12	50	20	21,5	78	31	12	10	17

Ball grips revolving with male thread

Order No. steel	Order No. stainless steel	D	D1	D2	L	H	H1	H2	B	SW1	SW2
06353-061	**06353-1061**	M6	25	10	11	37,5	15	5	5	8	3
06353-081	**06353-1081**	M8	32	13	13	48,5	19	6	6	10	4
06353-101	**06353-1101**	M10	40	16	14	61	24	8	8	13	5
06353-121	**06353-1121**	M12	50	20	21	78	31	12	10	17	6

06355

Handles screw-in

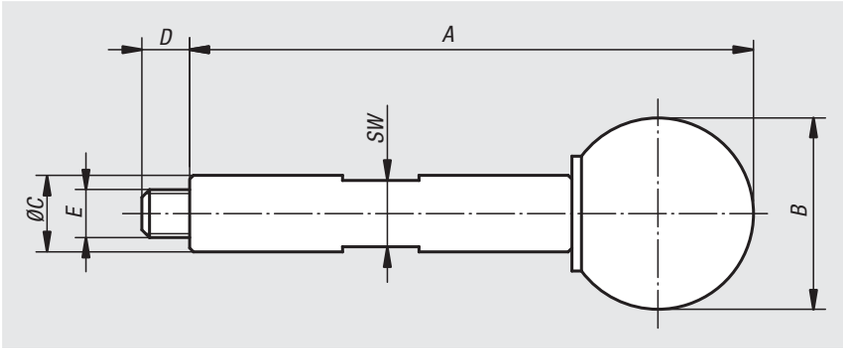

Material:
Grip carbon steel.
Ball knob Duroplast PF 31.

Version:
Grip, black oxidised.
Ball knob, black.

Sample order:
nlm 06355-05059

Order No.	A	B	C	D	E	SW
06355-05059	59	20	8	5	M5	7
06355-06089	89	25	10	6	M6	8

06357

Handles screw-in

with torque limit

Material:
Carbon steel.

Version:
Hardened, black oxidised.

Sample order:
nlm 06357-05090

Note:
The desired clamping force can be set by using the set screw to alter the torque. The handle snaps 15° when the set torque is achieved.

Note:
Ensure that the handle is set to snap horizontally.

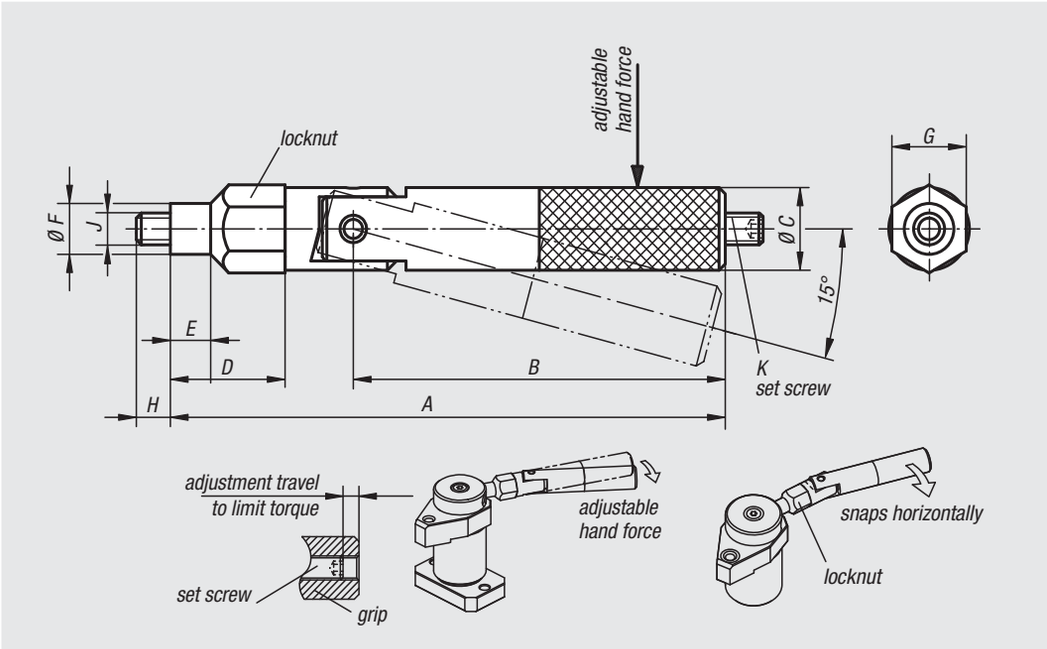

Order No.	A	B	C	D	E	F	G	H	J	K	Hand force FH N
06357-05090	89,5	60	13	18,5	6,5	8	12	5,5	M5	M5x16	0-150
06357-06119	119	84	15	23	8	10	14	6,5	M6	M6x20	0-200

Handles

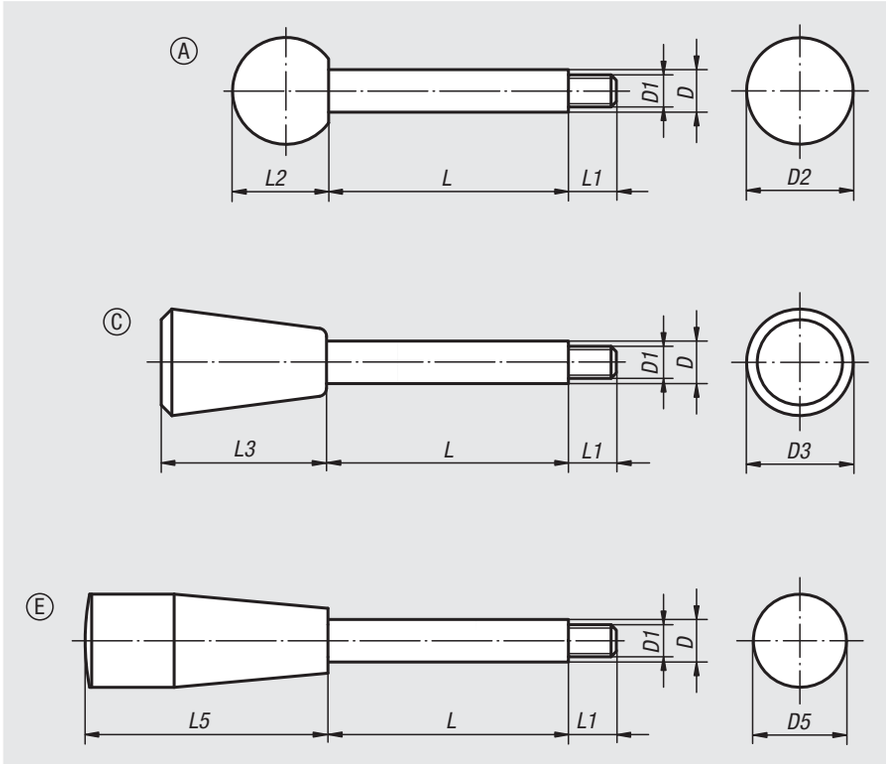

Material:
Knobs Duroplast PF 31.
Rod steel 1.0718 or stainless steel 1.4305.

Version:
Duroplast black, high-gloss polished.
Steel black oxidised or bright stainless steel.

Sample order:
nlm 06360-208X35 (include length L)

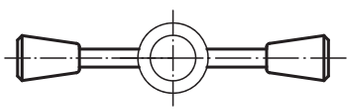

Order No.	Version	Form	D	D1	D2	D3	D5	L	L1	L2	L3	L5
06360-208X	steel	A	8	M6	20	-	-	35/50/65	9	18	-	-
06360-210X	steel	A	10	M8	25	-	-	50/65/80/100	13	22,5	-	-
06360-212X	steel	A	12	M10	32	-	-	65/80/100/125	15	29	-	-
06360-214X	steel	A	14	M12	36	-	-	80/100/125/160	16	33	-	-
06360-408X	steel	C	8	M6	-	20	-	35/50/65	9	-	31	-
06360-410X	steel	C	10	M8	-	25	-	50/65/80/100	13	-	38	-
06360-412X	steel	C	12	M10	-	30	-	65/80/100/125	15	-	46	-
06360-414X	steel	C	14	M12	-	35	-	80/100/125/160	16	-	53	-
06360-608X	steel	E	8	M6	-	-	17	35/50/65	9	-	-	45
06360-610X	steel	E	10	M8	-	-	23	50/65/80/100	13	-	-	61
06360-612X	steel	E	12	M10	-	-	29	65/80/100/125	15	-	-	71
06360-614X	steel	E	14	M12	-	-	29	80/100/125/160	16	-	-	71

Order No.	Version	Form	D	D1	D2	D3	D5	L	L1	L2	L3	L5
06360-1208X	stainless steel	A	8	M6	20	-	-	35/50/65	9	18	-	-
06360-1210X	stainless steel	A	10	M8	25	-	-	50/65/80/100	13	22,5	-	-
06360-1212X	stainless steel	A	12	M10	32	-	-	65/80/100/125	15	29	-	-
06360-1214X	stainless steel	A	14	M12	36	-	-	80/100/125/160	16	33	-	-
06360-1408X	stainless steel	C	8	M6	-	20	-	35/50/65	9	-	31	-
06360-1410X	stainless steel	C	10	M8	-	25	-	50/65/80/100	13	-	38	-
06360-1412X	stainless steel	C	12	M10	-	30	-	65/80/100/125	15	-	46	-
06360-1414X	stainless steel	C	14	M12	-	35	-	80/100/125/160	16	-	53	-
06360-1608X	stainless steel	E	8	M6	-	-	17	35/50/65	9	-	-	45
06360-1610X	stainless steel	E	10	M8	-	-	23	50/65/80/100	13	-	-	61
06360-1612X	stainless steel	E	12	M10	-	-	29	65/80/100/125	15	-	-	71
06360-1614X	stainless steel	E	14	M12	-	-	29	80/100/125/160	16	-	-	71

Clamp hubs

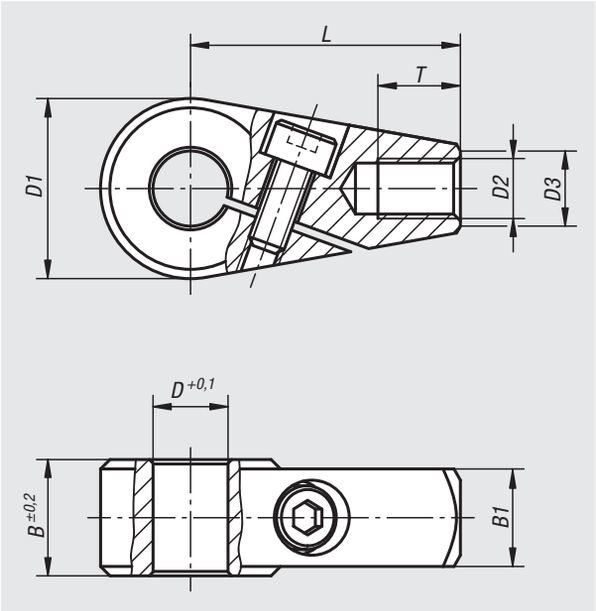

Material:
Carbon steel 1.1206.

Version:
Black oxidised.

Sample order:
nlm 06362-1012

Note:
Clamp hubs can be quickly and easily attached to shafts, adjusted in the proper operating position and then locked. For secure transmission of torque, shaft tolerance should not exceed h11.
At fastening thread (D2), handles can be screwed on.

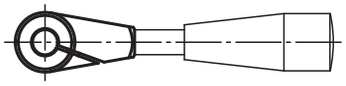

Order No.	D	D1	D2	D3	B	B1	L	T
06362-0810	10	24	M8	10	15,5	13	36	11
06362-0812	12	24	M8	10	15,5	13	36	11
06362-1012	12	28	M10	12	17,5	15	41	14
06362-1014	14	28	M10	12	17,5	15	41	14
06362-1214	14	32	M12	14	19,5	17	45	16
06362-1216	16	32	M12	14	19,5	17	45	16

Tension levers

internal thread

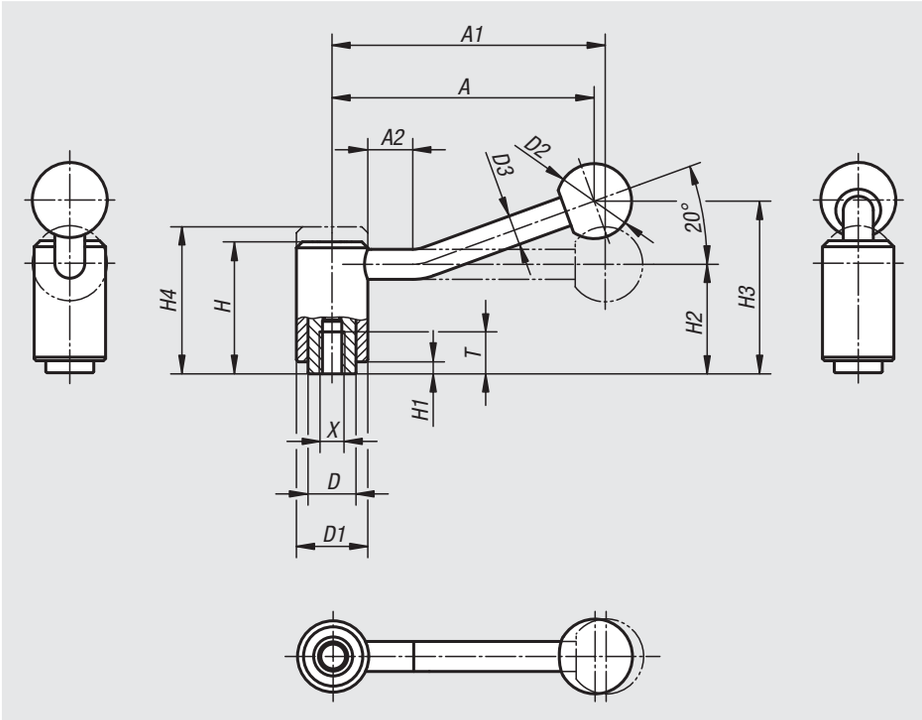

Material:
Steel parts grade 5.8.
Ball knob black plastic.

Version:
Plastic-coated with fine texture, black

Sample order:
nlm 06370-1082

On request:
Other internal threads and special versions.
Dimensions “H1”, “A” and “A1” available in other lengths at extra charge.

lift to disengage

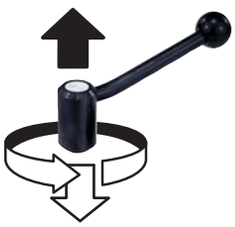

Order No. 0°	Order No. 20°	Size	X	T	D	D1	D2	D3	H	H1	H2	H3	H4	A	A1	A2	No. of teeth
06370-1082	**06370-1081**	1	M8	14	16	24	25	10	44,5	4,5	37	-/58,5	49,5	-/88	92/-	-/15	22
06370-1102	**06370-1101**	1	M10	14	16	24	25	10	44,5	4,5	37	-/58,5	49,5	-/88	92/-	-/15	22
06370-2102	**06370-2101**	2	M10	17	19	28	32	12	51,5	5,5	42	-/68,5	57,5	-/106	111/-	-/15	24
06370-2122	**06370-2121**	2	M12	17	19	28	32	12	51,5	5,5	42	-/68,5	57,5	-/106	111/-	-/15	24
06370-3122	**06370-3121**	3	M12	23	23	33	32	13	58	6	47	-/81	65	-/128,5	134,5/-	-/15	26
06370-3162	**06370-3161**	3	M16	23	23	33	32	13	58	6	47	-/81	65	-/128,5	134,5/-	-/15	26
06370-4162	**06370-4161**	4	M16	27	30	41	32	13	68,5	7,5	56,5	-/89,5	76,5	-/128,5	134/-	-/15	36
06370-4202	**06370-4201**	4	M20	27	30	41	32	13	68,5	7,5	56,5	-/89,5	76,5	-/128,5	134/-	-/15	36
06370-4242	**06370-4241**	4	M24	27	30	41	32	13	68,5	7,5	56,5	-/89,5	76,5	-/128,5	134/-	-/15	36

Tension levers

internal thread, stainless steel

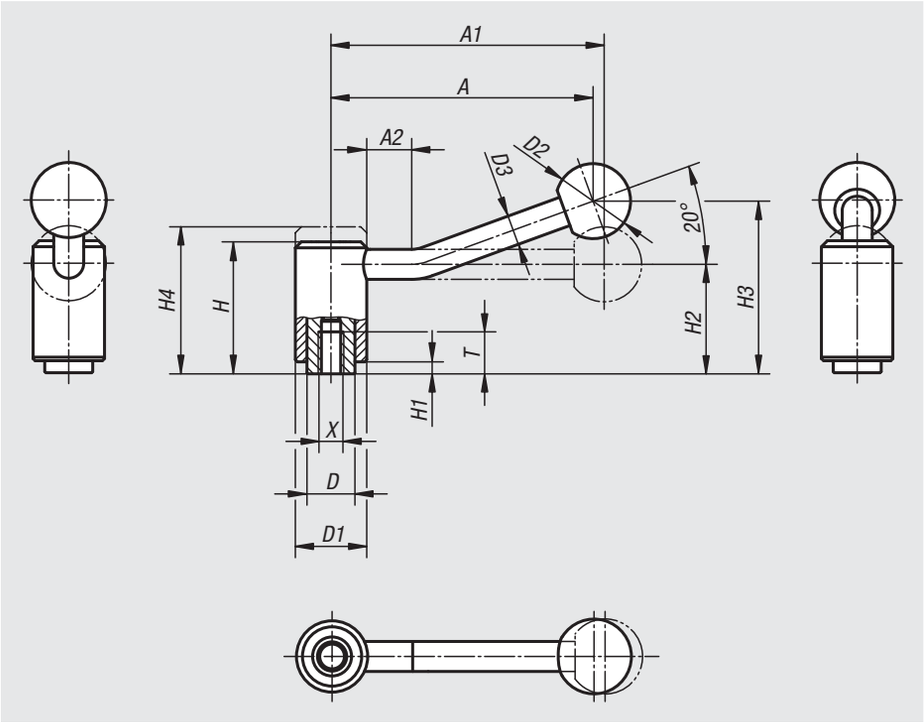

Material:
Steel parts stainless steel 1.4305.
Ball knob black plastic.

Version:
Steel parts bright.
Ball knob polished.

Sample order:
nlm 06371-1082

On request:
Other internal threads and special versions.
Dimensions “H1”, “A” and “A1” available in other lengths at extra charge.

lift to disengage

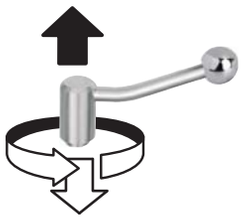

Order No. 0°	Order No. 20°	Size	X	T	D	D1	D2	D3	H	H1	H2	H3	H4	A	A1	A2	No. of teeth
06371-1082	**06371-1081**	1	M8	14	16	24	25	10	44,5	4,5	37	-/58,5	49,5	-/88	92/-	-/15	22
06371-1102	**06371-1101**	1	M10	14	16	24	25	10	44,5	4,5	37	-/58,5	49,5	-/88	92/-	-/15	22
06371-2102	**06371-2101**	2	M10	17	19	28	32	12	51,5	5,5	42	-/68,5	57,5	-/106	111/-	-/15	24
06371-2122	**06371-2121**	2	M12	17	19	28	32	12	51,5	5,5	42	-/68,5	57,5	-/106	111/-	-/15	24
06371-3122	**06371-3121**	3	M12	23	23	33	32	13	58	6	47	-/81	65	-/128,5	134,5/-	-/15	26
06371-3162	**06371-3161**	3	M16	23	23	33	32	13	58	6	47	-/81	65	-/128,5	134,5/-	-/15	26
06371-4162	**06371-4161**	4	M16	27	30	41	32	13	68,5	7,5	56,5	-/89,5	76,5	-/128,5	134/-	-/15	36
06371-4202	**06371-4201**	4	M20	27	30	41	32	13	68,5	7,5	56,5	-/89,5	76,5	-/128,5	134/-	-/15	36

Tension levers

external thread

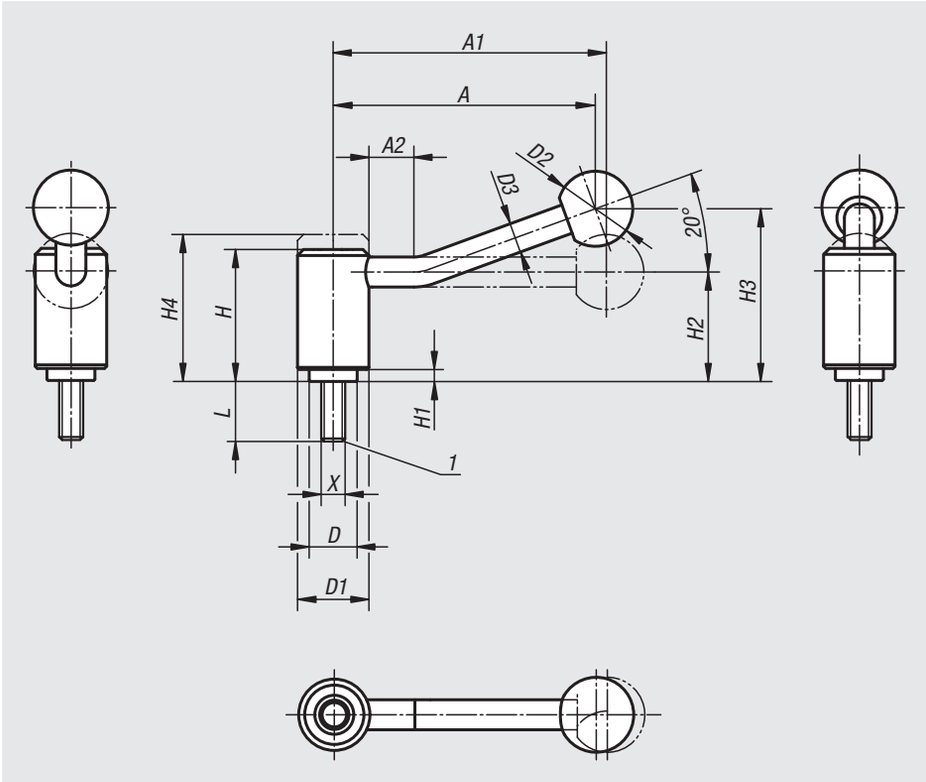

Material:
Steel parts grade 5.8.
Ball knob black plastic.

Version:
Plastic-coated with fine texture, black

Sample order:
nlm 06380-1082X30 (include length L)

On request:
Other external threads, screw lengths and special versions.
Dimensions “H1”, “A” and “A1” available in other lengths at extra charge.

Drawing reference:
1) flat point DIN 78

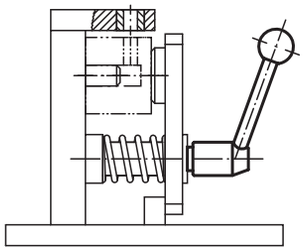

Order No. 0°	Order No. 20°	Size	X	D	D1	D2	D3	H	H1	H2	H3	H4	A	A1	A2	No. of teeth	L
06380-1082X	**06380-1081X**	1	M8	16	24	25	10	44,5	4,5	37	-/58,5	49,5	-/88	92/-	-/15	22	15/20/25/30/40/50/60
06380-1102X	**06380-1101X**	1	M10	16	24	25	10	44,5	4,5	37	-/58,5	49,5	-/88	92/-	-/15	22	15/20/25/30/40/50/60
06380-1122X	**06380-1121X**	1	M12	16	24	25	10	44,5	4,5	37	-/58,5	49,5	-/88	92/-	-/15	22	15/20/25/30/40/50/60
06380-2122X	**06380-2121X**	2	M12	19	28	32	12	51,5	5,5	42	-/68,5	57,5	-/106	111/-	-/15	24	20/25/30/40/50/60
06380-3122X	**06380-3121X**	3	M12	23	33	32	13	58	6	47	-/81	65	-/128,5	134,5/-	-/15	26	20/25/30/40/50/60/70/80/90
06380-3162X	**06380-3161X**	3	M16	23	33	32	13	58	6	47	-/81	65	-/128,5	134,5/-	-/15	26	20/25/30/40/50/60/70/80/90
06380-4162X	**06380-4161X**	4	M16	30	41	32	13	68,5	7,5	56,5	-/89,5	76,5	-/128,5	134/-	-/15	36	30/40/50/60/70/80/90
06380-4202X	**06380-4201X**	4	M20	30	41	32	13	68,5	7,5	56,5	-/89,5	76,5	-/128,5	134/-	-/15	36	30/40/50/60/70/80/90
06380-4242X	**06380-4241X**	4	M24	30	41	32	13	68,5	7,5	56,5	-/89,5	76,5	-/128,5	134/-	-/15	36	30/40/50/60/70/80/90

Tension levers

external thread, stainless steel

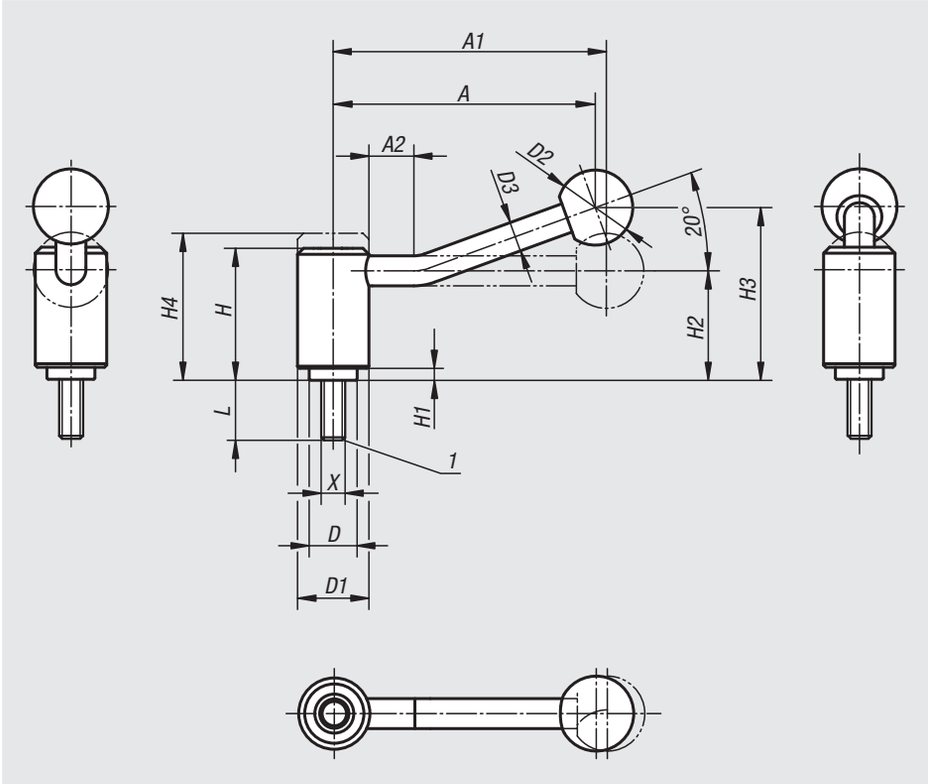

Material:
Steel parts stainless steel 1.4305.
Ball knob black plastic.

Version:
Steel parts bright.
Ball knob polished.

Sample order:
nlm 06381-1082X30 (include length L)

Note:
Missing dimensions see 06371.

On request:
Other external threads, screw lengths and special versions.
Dimensions “H1”, “A” and “A1” available in other lengths at extra charge.

Drawing reference:
1) flat point DIN 78

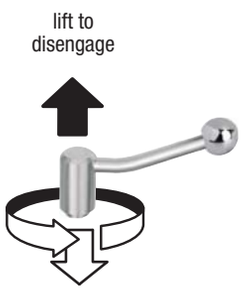

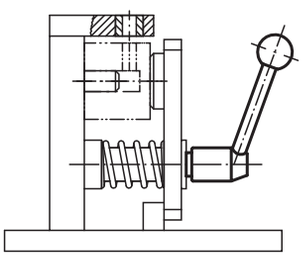

Order No. 0°	Order No. 20°	Size	X	H1	L
06381-1082X	**06381-1081X**	1	M8	4,5	15/20/25/30/40/50/60
06381-1102X	**06381-1101X**	1	M10	4,5	15/20/25/30/40/50/60
06381-1122X	**06381-1121X**	1	M12	4,5	15/20/25/30/40/50/60
06381-2122X	**06381-2121X**	2	M12	5,5	20/25/30/40/50/60
06381-3122X	**06381-3121X**	3	M12	6	20/25/30/40/50/60/70/80/90
06381-3162X	**06381-3161X**	3	M16	6	20/25/30/40/50/60/70/80/90
06381-4162X	**06381-4161X**	4	M16	7,5	30/40/50/60/70/80/90
06381-4202X	**06381-4201X**	4	M20	7,5	30/40/50/60/70/80/90

Tension levers safety

internal thread

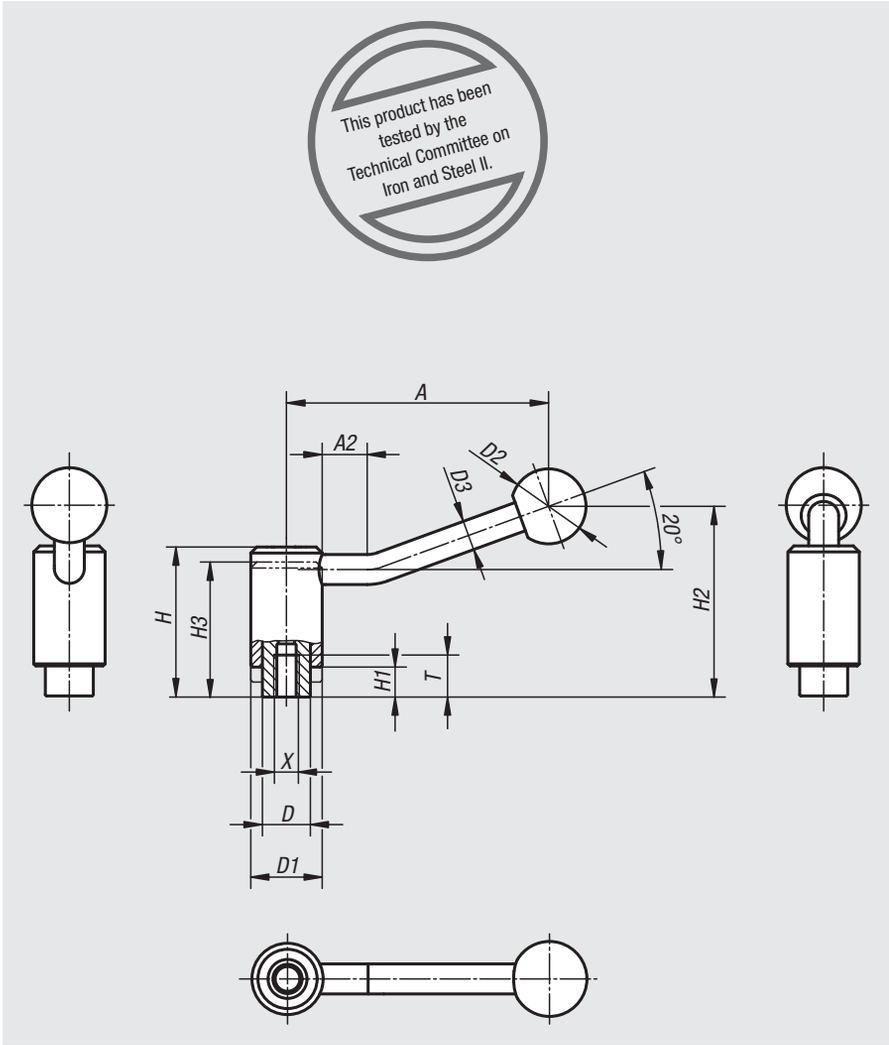

Material:
Steel parts grade 5.8.
Ball knob black plastic.

Version:
Plastic-coated with fine texture, black

Sample order:
nlm 06382-1108

Method of operation:
To operate safety tension levers, press the handle down until the teeth are fully engaged. The object concerned can now be clamped or released. Spring pressure releases the locking mechanism immediately, thereby restoring the safety function (handle can be turned effortlessly).

On request:
Special versions.
Dimensions “H1” and “A” available in other lengths at extra charge.

press to
engage
(safety function)

Order No.	Size	X	T	D	D1	D2	D3	H	H1	H2	H3	A	A2	No. of teeth
06382-1108	1	M8	14	16	24	25	10	49,5	9,5	63,5	44,5	88	15	22
06382-1110	1	M10	14	16	24	25	10	49,5	9,5	63,5	44,5	88	15	22
06382-1210	2	M10	17	19	28	32	12	56,5	10,5	74	51	106	15	24
06382-1212	2	M12	17	19	28	32	12	56,5	10,5	74	51	106	15	24
06382-1312	3	M12	23	23	33	32	13	64,5	12,5	87,5	57,5	128,5	15	26
06382-1316	3	M16	23	23	33	32	13	64,5	12,5	87,5	57,5	128,5	15	26

Tension levers safety

external thread

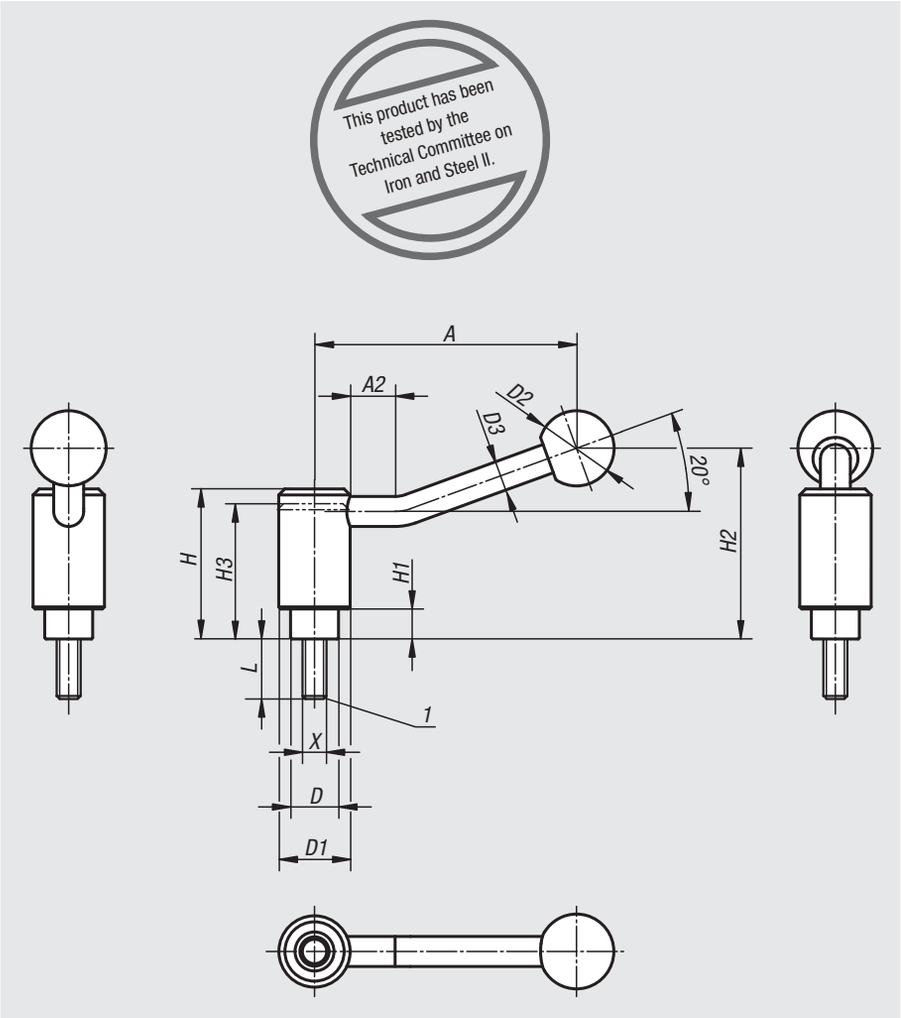

Material:
Steel parts grade 5.8.
Ball knob black plastic.

Version:
Plastic-coated with fine texture, black

Sample order:
nlm 06383-1108X30 (include length L)

Method of operation:
To operate safety tension levers, press the handle down until the teeth are fully engaged. The object concerned can now be clamped or released. Spring pressure releases the locking mechanism immediately, thereby restoring the safety function (handle can be turned effortlessly).

On request:
Other external threads, screw lengths and special versions.
Dimensions “H1” and “A” available in other lengths at extra charge.

press to
engage
(safety function)

Order No.	Size	X	H1	L
06383-1108X	1	M8	9,5	20/25/30/40/50/60
06383-1110X	1	M10	9,5	20/25/30/40/50/60
06383-1112X	1	M12	9,5	20/25/30/40/50/60
06383-1212X	2	M12	10,5	20/25/30/40/50/60
06383-1312X	3	M12	12,5	25/30/40/50/60
06383-1316X	3	M16	12,5	25/30/40/50/60

Tension levers flat

internal thread

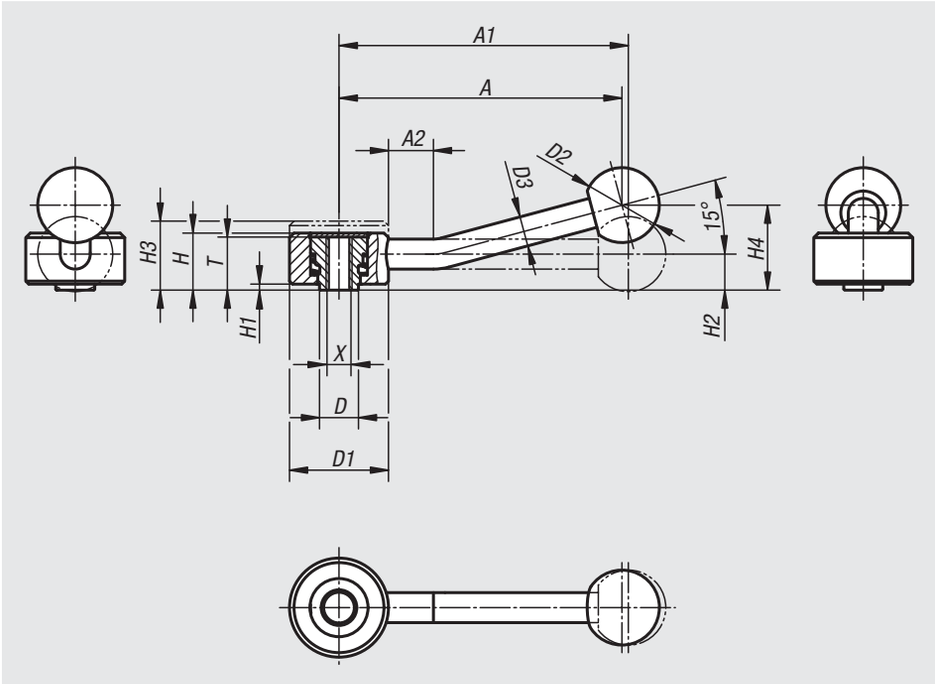

Material:
Steel parts grade 5.8.
Ball knob black plastic.

Version:
Black oxidised.

Sample order:
nlm 06390-1061

On request:
Other internal threads and special versions.
Dimensions “H1”, “A” and “A1” available in other lengths at extra charge.

lift to disengage

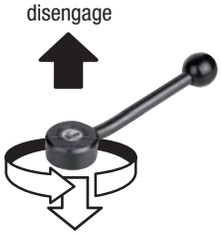

Order No. 0°	Order No. 15°	Size	X	T	D	D1	D2	D3	H	H1	H2	H3	H4	A	A1	A2	No. of teeth
06390-1061	**06390-1062**	1	M6	18	13,5	33	25	10	19	2	12	23	-/29	-/100	102/-	-/15	26
06390-1081	**06390-1082**	1	M8	18	13,5	33	25	10	19	2	12	23	-/29	-/100	102/-	-/15	26
06390-2101	**06390-2102**	2	M10	21	19	41	30	12	22	2	13,5	26	-/38	-/127	131/-	-/15	30
06390-2121	**06390-2122**	2	M12	21	19	41	30	12	22	2	13,5	26	-/38	-/127	131/-	-/15	30
06390-3121	**06390-3122**	3	M12	27	23	45	37	14	28	2	17	33	-/48	-/145	148/-	-/15	36
06390-3161	**06390-3162**	3	M16	27	23	45	37	14	28	2	17	33	-/48	-/145	148/-	-/15	36

Tension levers flat

internal thread, stainless steel

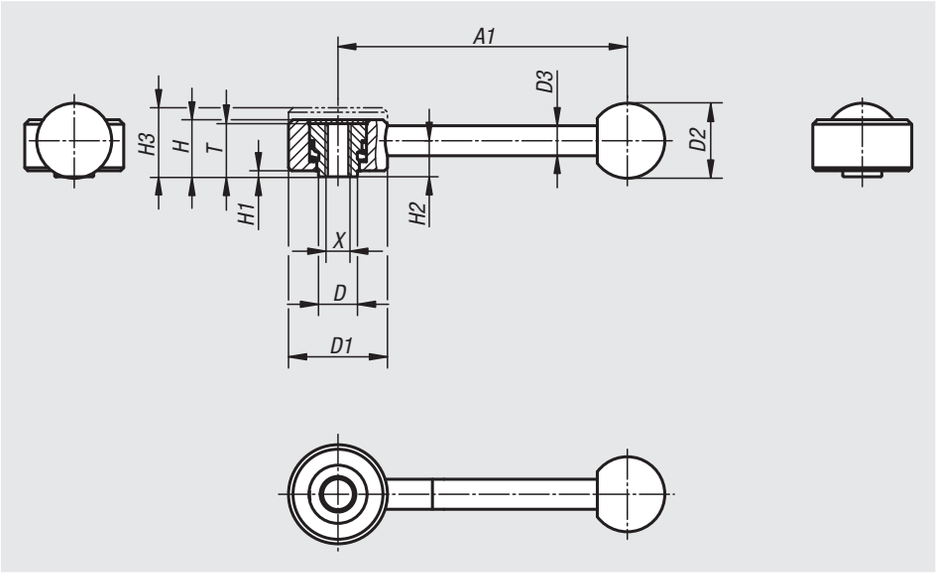

Material:
Steel parts stainless steel 1.4305.
Ball knob black plastic.

Version:
Steel parts bright.

Sample order:
nlm 06391-1081

On request:
Other internal threads and special versions.
Dimensions “H1” and “A1” available in other lengths at extra charge.

Order No.	Size	X	T	D	D1	D2	D3	H	H1	H2	H3	A1	No. of teeth
06391-1081	1	M8	18	13,5	33	25	10	19	2	12	23	102	26
06391-2101	2	M10	21	19	41	30	12	22	2	13,5	26	131	30
06391-2121	2	M12	21	19	41	30	12	22	2	13,5	26	131	30
06391-3161	3	M16	27	23	45	37	14	28	2	17	33	148	36

Tension levers flat

external thread

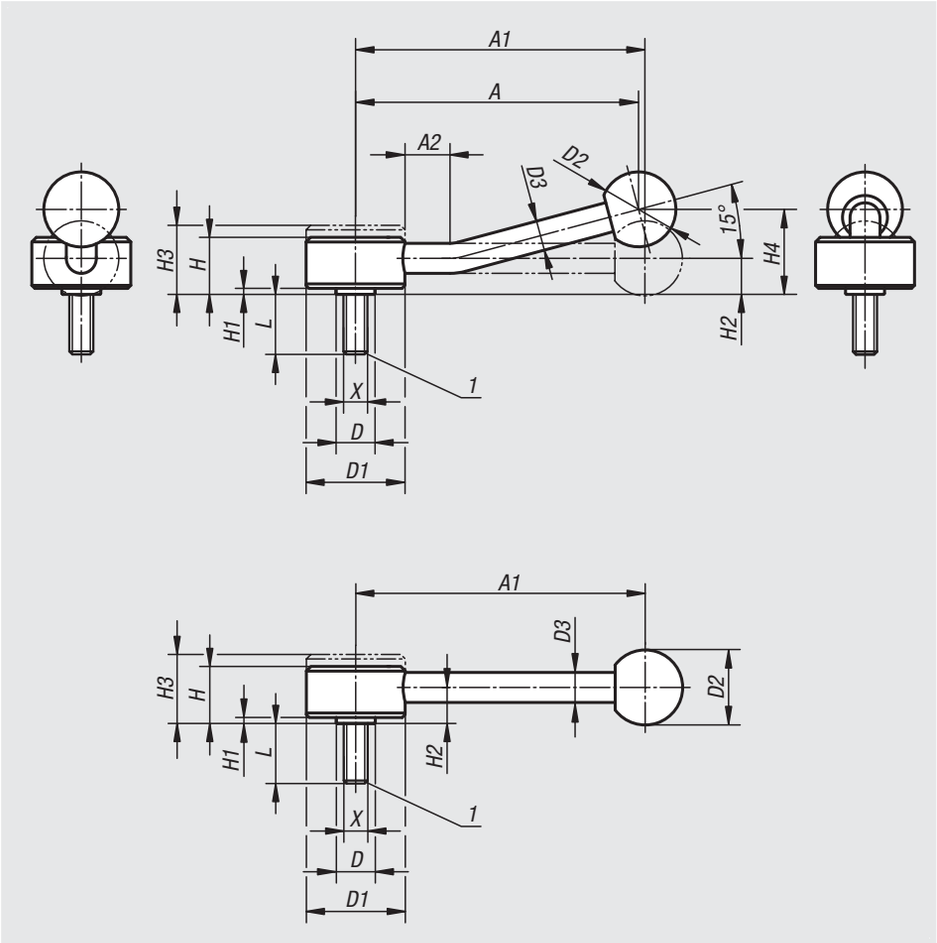

Material:
Steel parts grade 5.8.
Ball knob black plastic.

Version:
Black oxidised.

Sample order:
nlm 06400-1081X30 (include length L)

On request:
Other external threads, screw lengths and special versions.
Dimensions “H1”, “A” and “A1” available in other lengths at extra charge.

Drawing reference:
1) flat point DIN 78

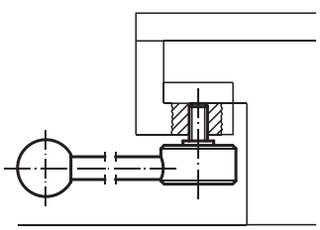

Order No. 0°	Order No. 15°	Size	X	D	D1	D2	D3	H	H1	H2	H3	H4	A	A1	A2	No. of teeth	L
06400-1081X	**06400-1082X**	1	M8	13,5	33	25	10	19	2	12	23	-/29	-/100	102/-	-/15	20	15/20/25/30/40/50/60
06400-1101X	**06400-1102X**	1	M10	13,5	33	25	10	19	2	12	23	-/29	-/100	102/-	-/15	20	15/20/25/30/40/50/60
06400-2101X	**06400-2102X**	2	M10	19	41	30	12	22	2	13,5	26	-/38	-/127	131/-	-/15	24	20/25/30/40/50/60
06400-2121X	**06400-2122X**	2	M12	19	41	30	12	22	2	13,5	26	-/38	-/127	131/-	-/15	24	20/25/30/40/50/60
06400-3121X	**06400-3122X**	3	M12	23	45	37	14	28	2	17	33	-/48	-/145	148/-	-/15	26	20/25/30/40/50/60
06400-3161X	**06400-3162X**	3	M16	23	45	37	14	28	2	17	33	-/48	-/145	148/-	-/15	26	20/25/30/40/50/60

Tension levers flat

external thread, stainless steel

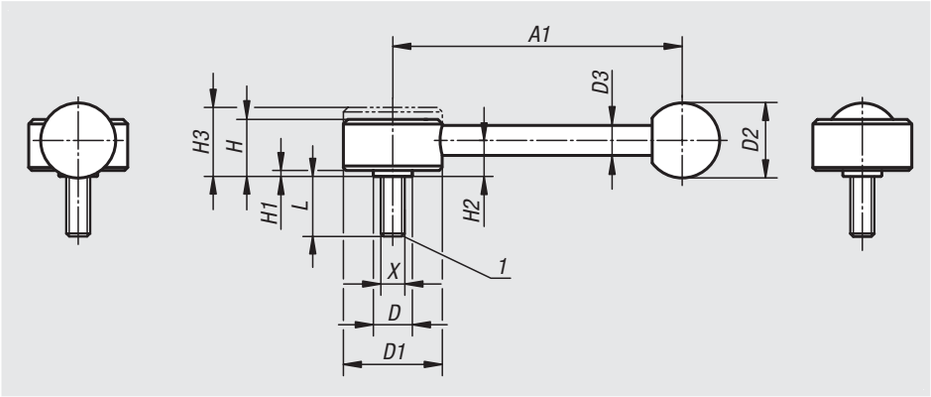

Material:
Steel parts stainless steel 1.4305.
Ball knob black plastic.

Version:
Steel parts bright.

Sample order:
nlm 06401-1081X40 (include length L)

On request:
Other external threads, screw lengths and special versions.
Dimensions “H1” and “A1” available in other lengths at extra charge.

Drawing reference:
1) flat point DIN 78

Order No.	Size	X	D	D1	D2	D3	H	H1	H2	H3	A1	No. of teeth	L
06401-1081X	1	M8	13,5	33	25	10	19	2	12	23	102	26	30/40/50
06401-2101X	2	M10	19	41	30	12	22	2	13,5	26	131	30	30/40/50/60
06401-2121X	2	M12	19	41	30	12	22	2	13,5	26	131	30	30/40/50/60
06401-3161X	3	M16	23	45	37	14	28	2	17	33	148	36	40/50/60

Clamping levers

internal thread

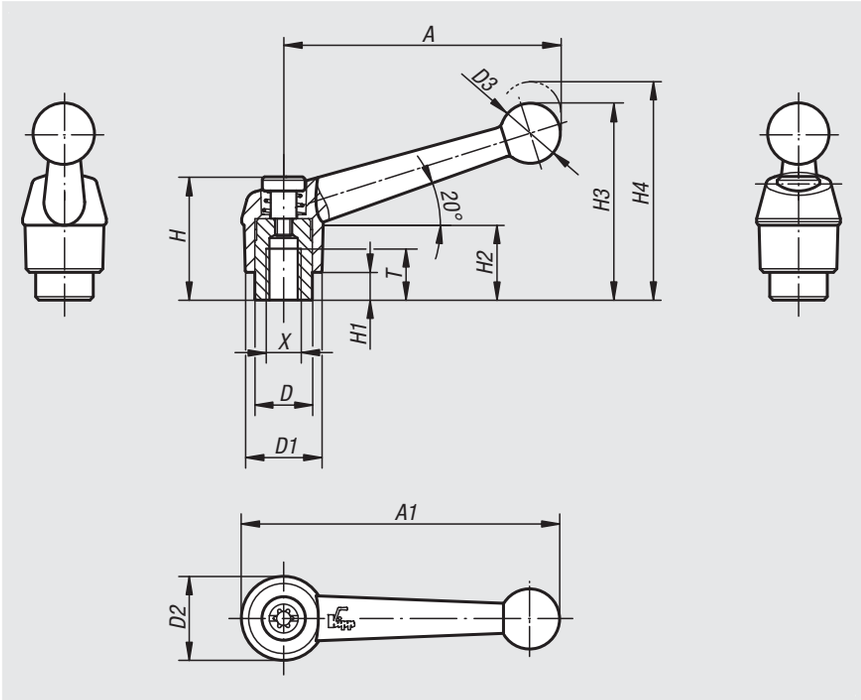

Material:
Handle die-cast zinc DIN EN 12844.
Steel parts grade 5.8.

Version:
Handle plastic-coated,
steel parts black oxidised.

Sample order:
nlm 06410-4103

Note:
Standard colours are:
black satin finish, silver metallic.

On request:
Other internal threads, colours and special versions.
Dimension “H1” available in other lengths at extra charge.

lift to
disengage

Order No. black satin finish	Order No. silver metallic	Size	X	T	D	D1	D2	D3	H	H1	H2	H3	H4	A	A1	No. of teeth
06410-1041	**06410-1043**	1	M4	9	10	13	14	10,5	24,5	4	15	32,5	35,5	39	46	16
06410-1051	**06410-1053**	1	M5	9	10	13	14	10,5	24,5	4	15	32,5	35,5	39	46	16
06410-1061	**06410-1063**	1	M6	9	10	13	14	10,5	24,5	4	15	32,5	35,5	39	46	16
06410-2061	**06410-2063**	2	M6	12	13,5	18	18,5	15,5	28,5	6,5	16,5	45,5	49,5	64	73	20
06410-2081	**06410-2083**	2	M8	12	13,5	18	18,5	15,5	28,5	6,5	16,5	45,5	49,5	64	73	20
06410-3081	**06410-3083**	3	M8	14	16	21	22	17	37	10	23	57,5	61,5	79	90	22
06410-3101	**06410-3103**	3	M10	14	16	21	22	17	37	10	23	57,5	61,5	79	90	22
06410-4101	**06410-4103**	4	M10	17	19	25	26	19	42,5	10	26	67	72	95	108	24
06410-4121	**06410-4123**	4	M12	17	19	25	26	19	42,5	10	26	67	72	95	108	24
06410-5121	**06410-5123**	5	M12	23	23	30	31	22	49	12	32	79	84	110	126	26
06410-5161	**06410-5163**	5	M16	23	23	30	31	22	49	12	32	79	84	110	126	26

Clamping levers

internal thread, steel parts stainless steel

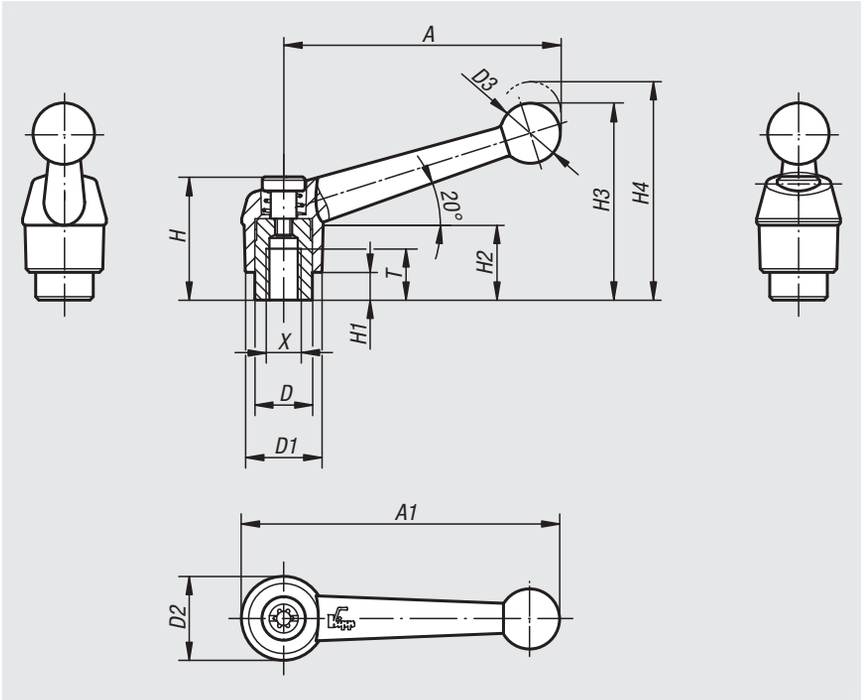

Material:
Handle die-cast zinc DIN EN 12844.
Steel parts stainless steel 1.4305.

Version:
Handle plastic-coated.
Steel parts bright.

Sample order:
nlm 06411-2061

Note:
Standard colours are:
black satin finish, silver metallic.

On request:
Other internal threads, colours and special versions.
Dimension “H1” available in other lengths at extra charge.

lift to
disengage

Order No. black satin finish	Order No. silver metallic	Size	X	T	D	D1	D2	D3	H	H1	H2	H3	H4	A	A1	No. of teeth
06411-1041	**06411-1043**	1	M4	9	10	13	14	10,5	24,5	4	15	32,5	35,5	39	46	16
06411-1051	**06411-1053**	1	M5	9	10	13	14	10,5	24,5	4	15	32,5	35,5	39	46	16
06411-1061	**06411-1063**	1	M6	9	10	13	14	10,5	24,5	4	15	32,5	35,5	39	46	16
06411-2061	**06411-2063**	2	M6	12	13,5	18	18,5	15,5	28,5	6,5	16,5	45,5	49,5	64	73	20
06411-2081	**06411-2083**	2	M8	12	13,5	18	18,5	15,5	28,5	6,5	16,5	45,5	49,5	64	73	20
06411-3081	**06411-3083**	3	M8	14	16	21	22	17	37	10	23	57,5	61,5	79	90	22
06411-3101	**06411-3103**	3	M10	14	16	21	22	17	37	10	23	57,5	61,5	79	90	22
06411-4101	**06411-4103**	4	M10	17	19	25	26	19	42,5	10	26	67	72	95	108	24
06411-4121	**06411-4123**	4	M12	17	19	25	26	19	42,5	10	26	67	72	95	108	24
06411-5121	**06411-5123**	5	M12	23	23	30	31	22	49	12	32	79	84	110	126	26
06411-5161	**06411-5163**	5	M16	23	23	30	31	22	49	12	32	79	84	110	126	26

Ball handles

DIN 6337

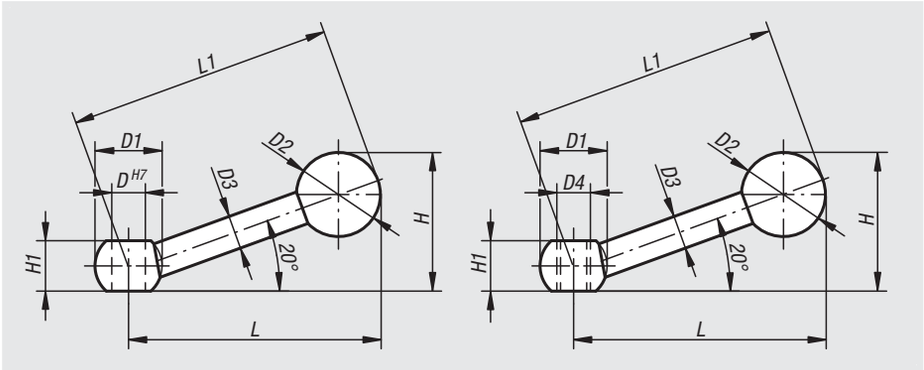

Material:
Steel.
Ball knob Duroplast.

Version:
Black oxidised, ball knob black.

Sample order:
nlm 06420-112

Order No. reamed hole	Order No. internal thread	D	D1	D2	D3	D4	H	H1	L	L1
06420-108	**06420-208**	8/-	16	20	8	-/M8	33	12	63	63
06420-110	**06420-210**	10/-	20	20	9	-/M10	40	14,5	80	80
06420-112	**06420-212**	12/-	25	25	11	-/M12	50	18,5	100	100
06420-116	**06420-216**	16/-	32	32	15	-/M16	63	24	125	125

Clamping levers

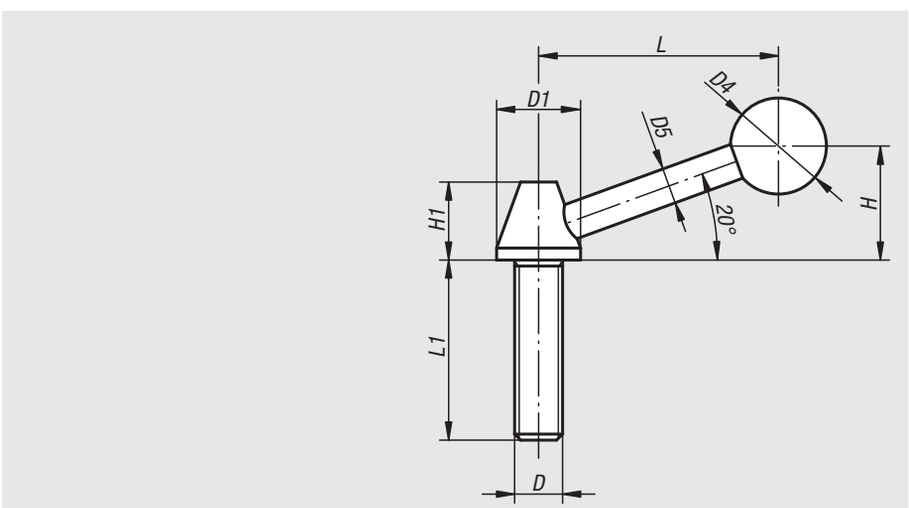

Material:
Steel.
Ball knob Duroplast.

Version:
steel black oxidised.
Ball knob black.

Sample order:
nlm 06430-112

Order No.	D	D1	D4	D5	H	H1	L	L1
06430-108	M8	14	16	6	19	13	40	45
06430-110	M10	18	20	6	24	17	54	60
06430-112	M12	22	30	10	42	19	82	70
06430-116	M16	25	32	12	55	23	110	75

Clamping levers

external thread

Material:
Handle die-cast zinc DIN EN 12844.
Steel parts grade 5.8.

Version:
Handle plastic-coated.
Steel black oxidised.

Sample order:
nlm 06430-1051X20 (include length L)

Note:
Standard colours are:
black satin finish, silver metallic.
Where L ≥ 60 mm the thread length is 60 mm.

On request:
Other external threads, screw lengths, colours and special versions.
Dimension "H1" available in other lengths at extra charge.

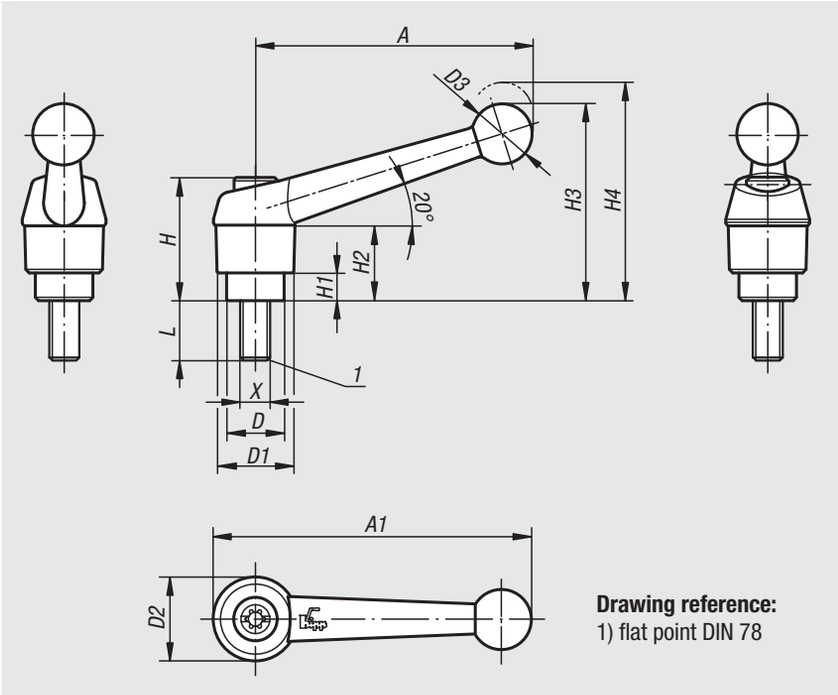

Drawing reference:
1) flat point DIN 78

lift to disengage

Specifications

Size	X	D	D1	D2	D3	H	H1	H2	H3	H4	A	A1	No. of teeth
1	M5/M6	10	13	14	10,5	24,5	4	15	32,5	35,5	39	46	16
2	M6/M8/M10	13,5	18	18,5	15,5	28,5	6,5	16,5	45,5	49,5	64	73	20
3	M8/M10	16	21	22	17	37	10	23	57,5	61,5	79	90	22
4	M10/M12	19	25	26	19	42,5	10	26	67	72	95	108	24
5	M12/M16	23	30	31	22	49	12	32	79	84	110	126	26

Order No. black satin finish	Order No. silver metallic	Size	X	L
06430-1051X	**06430-1053X**	1	M5	10/15/20/25/30/35/40/45/50
06430-1061X	**06430-1063X**	1	M6	10/15/20/25/30/35/40/45/50
06430-2061X	**06430-2063X**	2	M6	15/20/25/30/35/40/45/50/55/60
06430-2081X	**06430-2083X**	2	M8	15/20/25/30/35/40/45/50/55/60
06430-2101X	**06430-2103X**	2	M10	15/20/25/30/35/40/45/50/55/60
06430-3081X	**06430-3083X**	3	M8	15/20/25/30/35/40/45/50/55/60
06430-3101X	**06430-3103X**	3	M10	15/20/25/30/35/40/45/50/55/60
06430-4101X	**06430-4103X**	4	M10	20/25/30/35/40/45/50/55/60/70/80/90
06430-4121X	**06430-4123X**	4	M12	20/25/30/35/40/45/50/55/60/70/80/90
06430-5121X	**06430-5123X**	5	M12	25/30/35/40/45/50/55/60/70/80/90
06430-5161X	**06430-5163X**	5	M16	25/30/35/40/45/50/55/60/70/80/90

Clamping levers

external thread, steel parts stainless steel

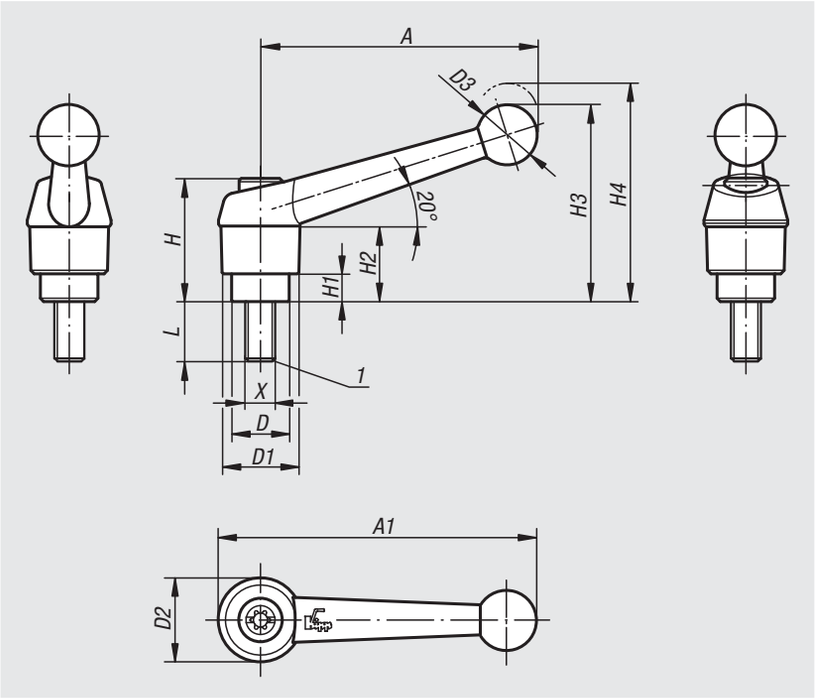

Material:
Handle die-cast zinc DIN EN 12844.
Steel parts stainless steel 1.4305.

Version:
Handle plastic-coated.
Stainless steel bright.

Sample order:
nlm 06431-1051X20 (include length L)

Note:
Standard colours are:
black satin finish, silver metallic.
Where L ≥ 60 mm the thread length is 60 mm.

On request:
Other external threads, screw lengths, colours and special versions.
Dimension "H1" available in other lengths at extra charge.

Drawing reference:
1) flat point DIN 78

lift to disengage

Specifications

Size	X	D	D1	D2	D3	H	H1	H2	H3	H4	A	A1	No. of teeth
1	M5/M6	10	13	14	10,5	24,5	4	15	32,5	35,5	39	46	16
2	M6/M8/M10	13,5	18	18,5	15,5	28,5	6,5	16,5	45,5	49,5	64	73	20
3	M8/M10	16	21	22	17	37	10	23	57,5	61,5	79	90	22
4	M12	19	25	26	19	42,5	10	26	67	72	95	108	24
5	M16	23	30	31	22	49	12	32	79	84	110	126	26

Order No. black satin finish	Order No. silver metallic	Size	X	L
06431-1051X	**06431-1053X**	1	M5	10/15/20/25
06431-1061X	**06431-1063X**	1	M6	10/15/20/25/30/40/50
06431-2061X	**06431-2063X**	2	M6	15/20/25/30/40/50/60
06431-2081X	**06431-2083X**	2	M8	15/20/25/30/40/50/60
06431-2101X	**06431-2103X**	2	M10	20/25/30/40/50/60
06431-3081X	**06431-3083X**	3	M8	20/25/30/40/50/60
06431-3101X	**06431-3103X**	3	M10	20/25/30/40/50/60
06431-4121X	**06431-4123X**	4	M12	25/30/40/50/60
06431-5161X	**06431-5163X**	5	M16	30/40/50/60

Clamping levers

internal thread, steel

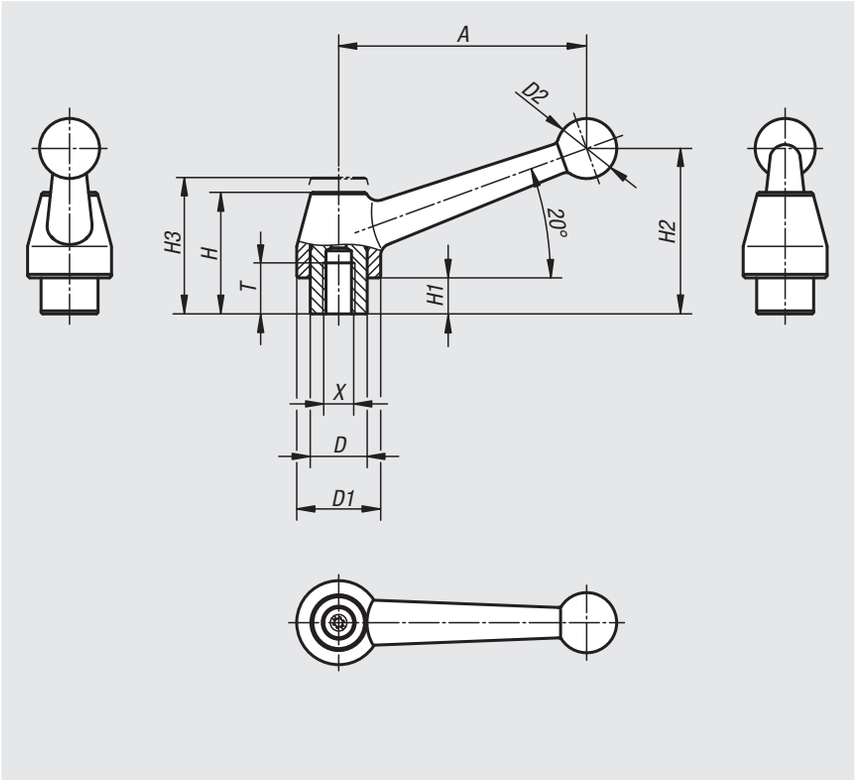

Material:
Handle 1.0401.
All other steel parts grade 5.8.

Version:
Handle painted silver-grey hammertone.
Steel parts black oxidised.

Sample order:
nlm 06440-108

On request:
Other internal threads and special versions.
Dimension “H1” available in other lengths at extra charge.

lift to
disengage

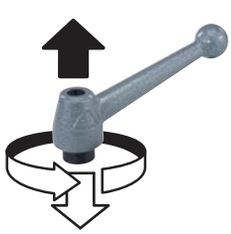

Order No.	Main material	Size	X	T	D	D1	D2	H	H1	H2	H3	A	No. of teeth
06440-108	steel	1	M8	17	19	28	20	41	12	54	49	83	24
06440-110	steel	1	M10	17	19	28	20	41	12	54	49	83	24
06440-112	steel	1	M12	17	19	28	20	41	12	54	49	83	24
06440-212	steel	2	M12	23	23	35	25	50	12	69	56	108	26
06440-216	steel	2	M16	23	23	35	25	50	12	69	56	108	26
06440-316	steel	3	M16	27	30	43	30	58,5	12	78	65	132	36
06440-320	steel	3	M20	27	30	43	30	58,5	12	78	65	132	36

Clamping levers

internal thread, stainless steel

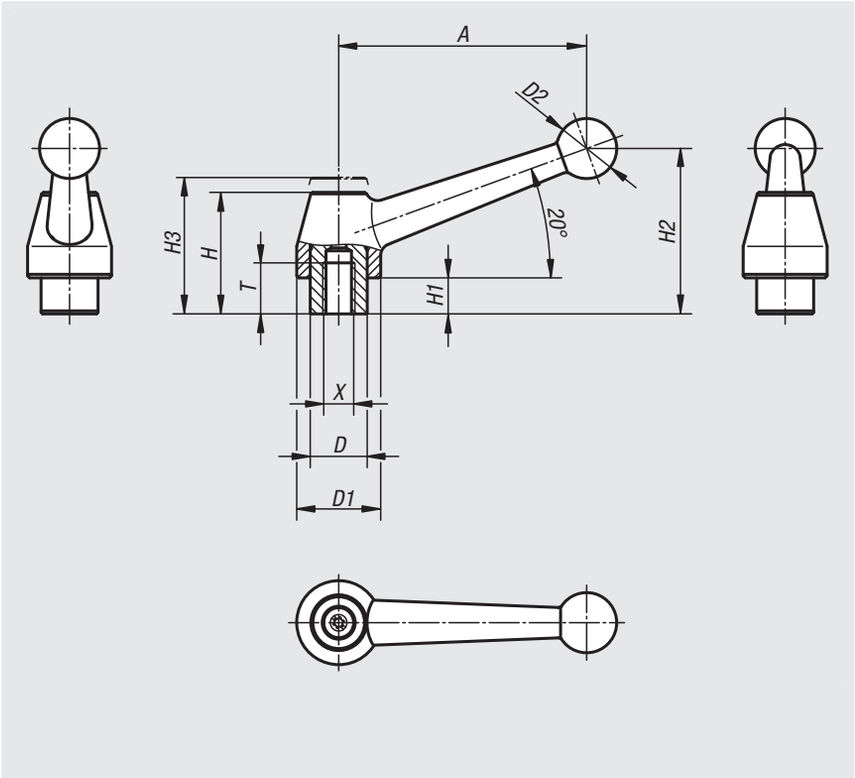

Material:
Handle stainless steel 1.4308.
All other metal parts stainless steel 1.4305

Version:
Handle stainless steel electrolytic polished.
Steel parts bright.

Sample order:
nlm 06440-1108

On request:
Other internal threads and special versions.
Dimension “H1” available in other lengths at extra charge.

lift to
disengage

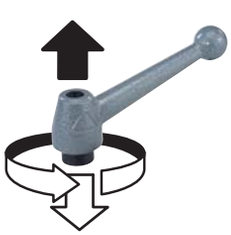

Order No.	Main material	Size	X	T	D	D1	D2	H	H1	H2	H3	A	No. of teeth
06440-1108	stainless steel	1	M8	17	19	28	20	41	12	54	49	83	24
06440-1110	stainless steel	1	M10	17	19	28	20	41	12	54	49	83	24
06440-1112	stainless steel	1	M12	17	19	28	20	41	12	54	49	83	24

Clamping levers

external thread

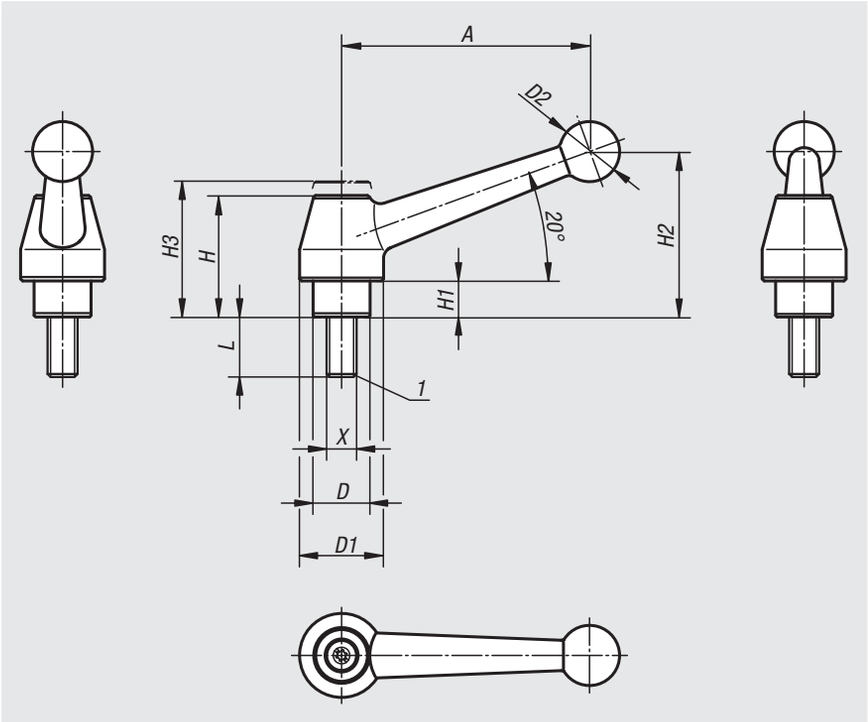

Material:
Handle 1.0401.
All other steel parts grade 5.8.

Version:
Handle painted silver-grey hammertone.
Steel parts black oxidised.

Sample order:
nlm 06441-110X30 (include length L)

Note:
Where L ≥ 60 mm the thread length is 60 mm.

On request:
Other external threads, screw lengths and special versions.
Dimension “H1” available in other lengths at extra charge.

Drawing reference:
1) flat point DIN 78

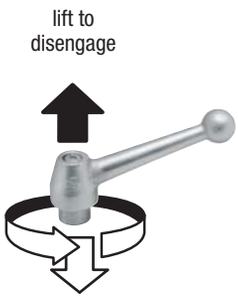

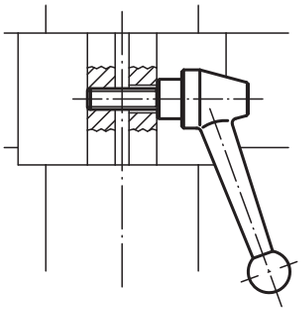

Order No.	Main material	Size	X	D	D1	D2	H	H1	H2	H3	A	No. of teeth	L
06441-110X	steel	1	M10	19	28	20	41	12	54	49	83	24	20/25/30/35/40/45/50/55/60/70/80/90
06441-112X	steel	1	M12	19	28	20	41	12	54	49	83	24	20/25/30/35/40/45/50/55/60/70/80/90
06441-212X	steel	2	M12	23	35	25	50	12	69	56	108	26	25/30/35/40/45/50/55/60/70/80/90
06441-216X	steel	2	M16	23	35	25	50	12	69	56	108	26	25/30/35/40/45/50/55/60/70/80/90
06441-316X	steel	3	M16	30	43	30	58,5	12	78	65	132	36	30/40/50/60/70/80/90
06441-320X	steel	3	M20	30	43	30	58,5	12	78	65	132	36	30/40/50/60/70/80/90

Clamping levers

external thread, stainless steel

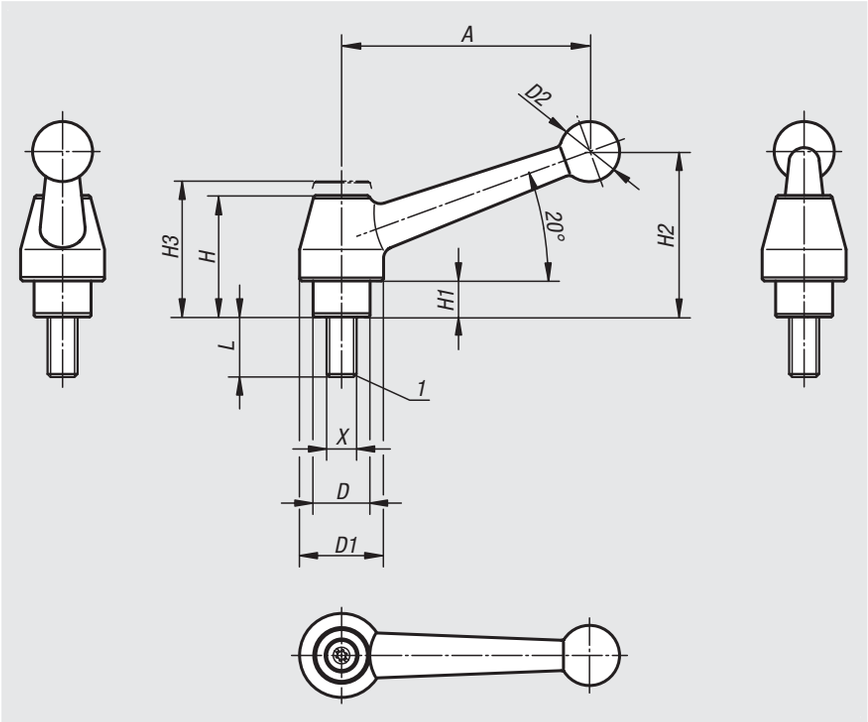

Material:
Handle stainless steel 1.4308.
All other metal parts stainless steel 1.4305

Version:
Handle stainless steel electrolytic polished.
Steel parts bright.

Sample order:
nlm 06441-1110X30 (include length L)

Note:
Where L ≥ 60 mm the thread length is 60 mm.

On request:
Other external threads, screw lengths and special versions.
Dimension "H1" available in other lengths at extra charge.

Drawing reference:
1) flat point DIN 78

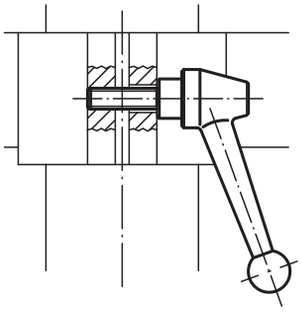

Order No.	Main material	Size	X	D	D1	D2	H	H1	H2	H3	A	No. of teeth	L
06441-1110X	stainless steel	1	M10	19	28	20	41	12	54	49	83	24	25/30/40/50/60
06441-1112X	stainless steel	1	M12	19	28	20	41	12	54	49	83	24	25/30/40/50/60

Clamping levers

internal thread, steel

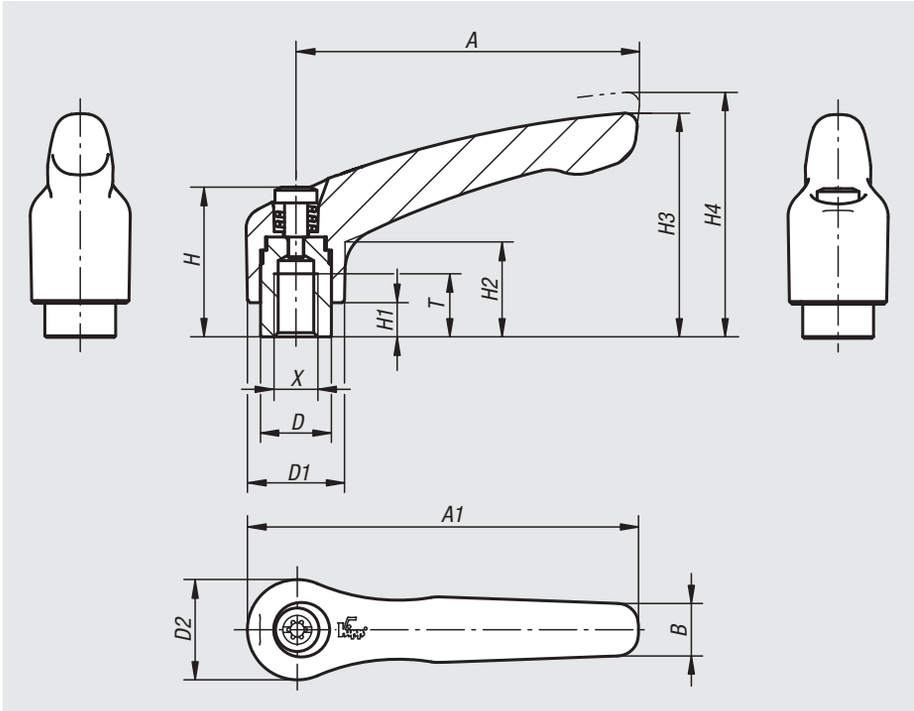

Material:
Handle 1.0401.
All other steel parts grade 5.8.

Version:
Handle plastic-coated, fine-textured structure.
Steel parts black oxidised.

Sample order:
nlm 06442-1051

Note:
Standard colours are:
black or ruby red RAL 3003.

lift to
disengage

Order No. black	Order No. red RAL 3003	Size	X	T	D	D1	D2	H	H1	H2	H3	H4	A	A1	B	No. of teeth
06442-1041	**06442-10427**	1	M4	9	10	13	14	24,5	4	14,5	31	34	40	47	7	16
06442-1051	**06442-10527**	1	M5	9	10	13	14	24,5	4	14,5	31	34	40	47	7	16
06442-1061	**06442-10627**	1	M6	9	10	13	14	24,5	4	14,5	31	34	40	47	7	16
06442-2061	**06442-20627**	2	M6	12	13,5	18,5	19	28,5	6,5	17,5	42,5	45,5	65	74,5	10	20
06442-2081	**06442-20827**	2	M8	12	13,5	18,5	19	28,5	6,5	17,5	42,5	45,5	65	74,5	10	20
06442-3081	**06442-30827**	3	M8	14	16	21	22	37	10	24	54,5	58,5	80	91	11	22
06442-3101	**06442-31027**	3	M10	14	16	21	22	37	10	24	54,5	58,5	80	91	11	22
06442-4101	**06442-41027**	4	M10	17	19	27	27,5	43	10	27	63	67,5	95	109	13	24
06442-4121	**06442-41227**	4	M12	17	19	27	27,5	43	10	27	63	67,5	95	109	13	24
06442-5121	**06442-51227**	5	M12	23	23	31	32	49	12	31,5	73	77,5	110	126	15	26
06442-5161	**06442-51627**	5	M16	23	23	31	32	49	12	31,5	73	77,5	110	126	15	26

Clamping levers

external thread, steel

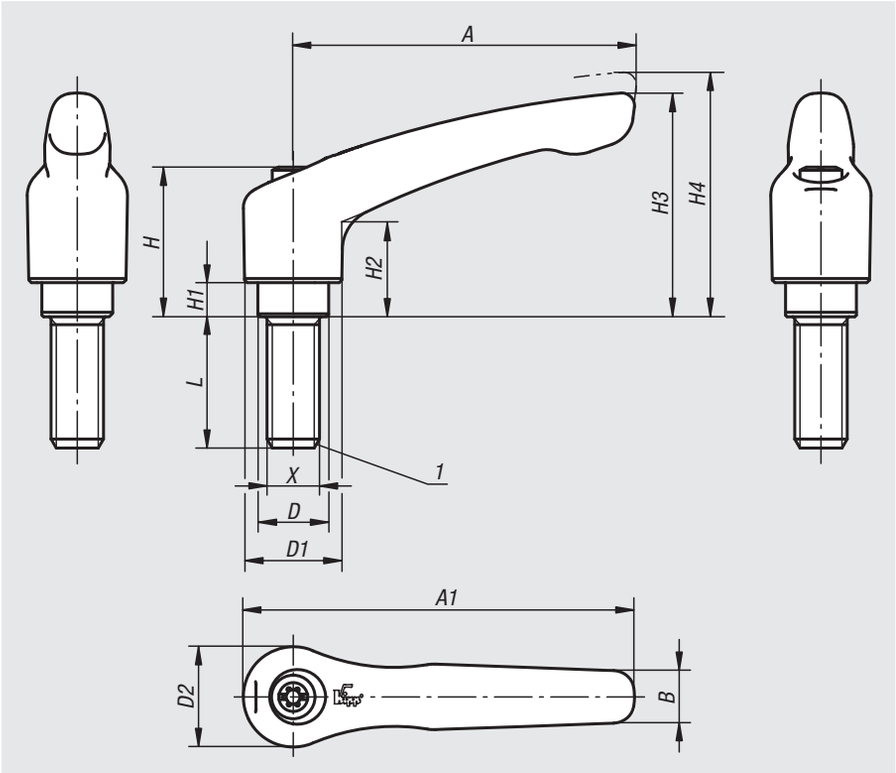

Material:
Handle 1.0401.
All other steel parts grade 5.8.

Version:
Handle plastic-coated, fine-textured structure.
Steel parts black oxidised.

Sample order:
nlm 06443-1051X20

Note:
Standard colours are:
black or ruby red RAL 3003.
Where L ≥ 60 mm the thread length is 60 mm.

Drawing reference:
1) flat point DIN 78

lift to disengage

Specifications

Size	X	D	D1	D2	H	H1	H2	H3	H4	A	A1	B	No. of teeth
1	M5/M6	10	13	14	24,5	4	14,5	31	34	40	47	7	16
2	M6/M8/M10	13,5	18,5	19	28,5	6,5	17,5	42,5	45,5	65	74,5	10	20
3	M8/M10	16	21	22	37	10	24	54,5	58,5	80	91	11	22
4	M10/M12	19	27	27,5	43	10	27	63	67,5	95	109	13	24
5	M12/M16	23	31	32	49	12	31,5	73	77,5	110	126	15	26

Order No. black	Order No. red RAL 3003	Size	X	L
06443-1051X	**06443-10527X**	1	M5	10/15/20/25/30/35/40/45/50
06443-1061X	**06443-10627X**	1	M6	10/15/20/25/30/35/40/45/50
06443-2061X	**06443-20627X**	2	M6	15/20/25/30/35/40/45/50/55/60
06443-2081X	**06443-20827X**	2	M8	15/20/25/30/35/40/45/50/55/60
06443-2101X	**06443-21027X**	2	M10	15/20/25/30/35/40/45/50/55/60
06443-3081X	**06443-30827X**	3	M8	15/20/25/30/35/40/45/50/55/60
06443-3101X	**06443-31027X**	3	M10	15/20/25/30/35/40/45/50/55/60
06443-4101X	**06443-41027X**	4	M10	20/25/30/35/40/45/50/55/60/70/80/90
06443-4121X	**06443-41227X**	4	M12	20/25/30/35/40/45/50/55/60/70/80/90
06443-5121X	**06443-51227X**	5	M12	25/30/35/40/45/50/55/60/70/80/90
06443-5161X	**06443-51627X**	5	M16	25/30/35/40/45/50/55/60/70/80/90

Clamping levers flat

internal thread

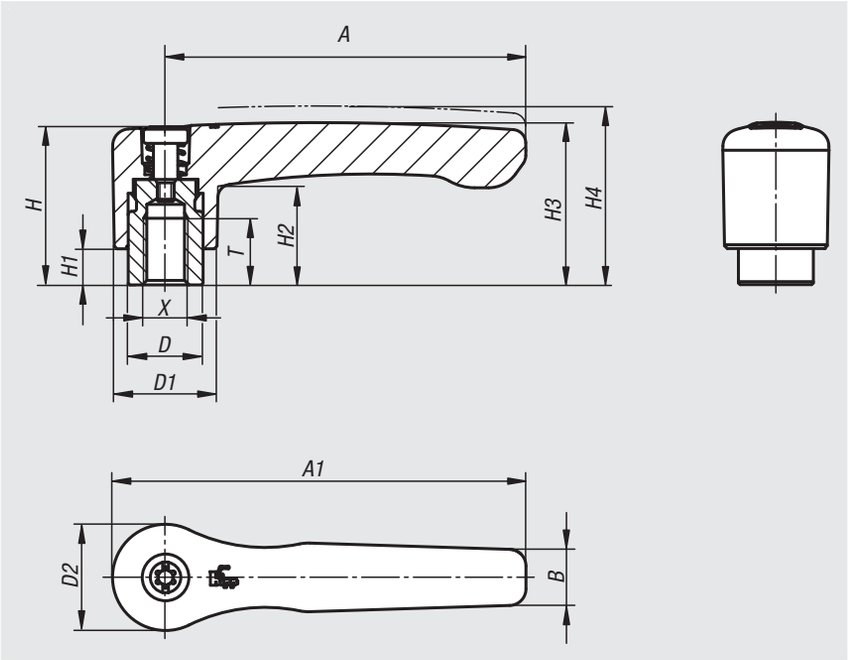

Material:
Handle die-cast zinc DIN EN 12844.
Steel parts grade 5.8.

Version:
Handle plastic-coated,
steel parts black oxidised.

Sample order:
nlm 06448-2061

Note:
Standard colours are:
black satin finish, orange RAL 2004.

On request:
Other internal threads, colours and special versions.
Dimension “H1” available in other lengths at extra charge.

lift to
disengage

Order No. black satin finish	Order No. pure orange RAL 2004	Size	X	T	D	D1	D2	H	H1	H2	H3	H4	A	A1	B	No. of teeth
06448-2061	**06448-2062**	2	M6	12	13,5	18,5	19,1	28,5	6,5	17,8	29,2	32,2	65	74,5	10,1	20
06448-2081	**06448-2082**	2	M8	12	13,5	18,5	19,1	28,5	6,5	17,8	29,2	32,2	65	74,5	10,1	20
06448-3081	**06448-3082**	3	M8	14	16	21,2	22	37	10	23,8	38	42	80	91	11,7	22
06448-3101	**06448-3102**	3	M10	14	16	21,2	22	37	10	23,8	38	42	80	91	11,7	22

Clamping levers flat

internal thread, steel parts stainless steel

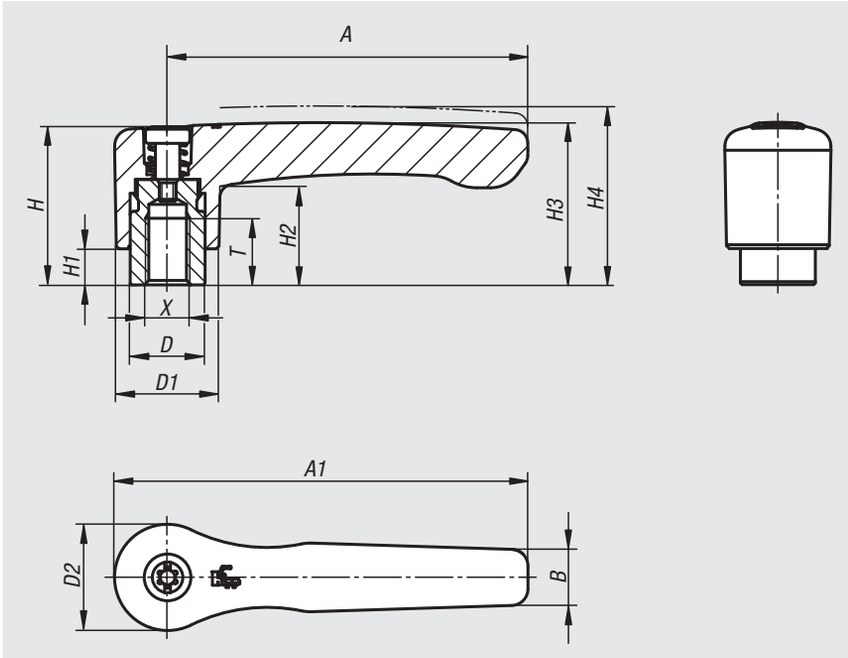

Material:
Handle die-cast zinc DIN EN 12844.
Steel parts stainless steel 1.4305.

Version:
Handle plastic-coated.
Steel parts bright.

Sample order:
nlm 06449-2061

Note:
Standard colours are:
black satin finish, orange RAL 2004.

On request:
Other internal threads, colours and special versions.
Dimension “H1” available in other lengths at extra charge.

lift to
disengage

Order No. black satin finish	Order No. pure orange RAL 2004	Size	X	T	D	D1	D2	H	H1	H2	H3	H4	A	A1	B	No. of teeth
06449-2061	**06449-2062**	2	M6	12	13,5	18,5	19,1	28,5	6,5	17,8	29,2	32,2	65	74,5	10,1	20
06449-2081	**06449-2082**	2	M8	12	13,5	18,5	19,1	28,5	6,5	17,8	29,2	32,2	65	74,5	10,1	20
06449-3081	**06449-3082**	3	M8	14	16	21,2	22	37	10	23,8	38	42	80	91	11,7	22
06449-3101	**06449-3102**	3	M10	14	16	21,2	22	37	10	23,8	38	42	80	91	11,7	22

Clamping levers

internal thread

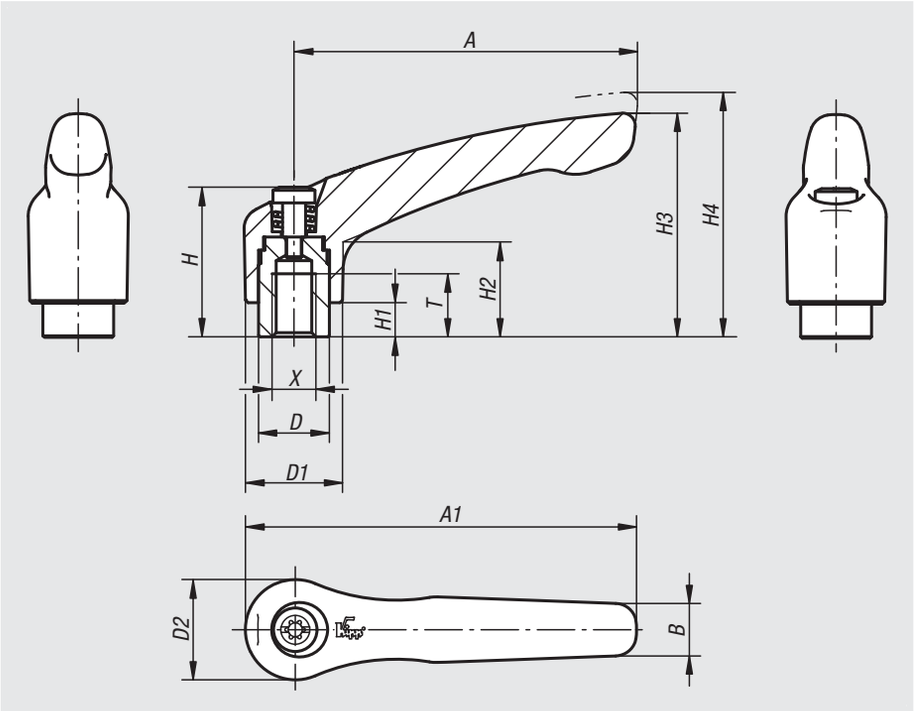

Material:
Handle die-cast zinc DIN EN 12844.
Steel parts grade 5.8.

Version:
Handle plastic-coated or high-gloss chromed.
Steel parts black oxidised.

Sample order:
nlm 06450-1041 (clamping lever, black satin finish)

Note:
Δ Add the desired lever colour here.
Standard colours are:
black satin finish, orange RAL 2004, ruby red RAL 3003, silver metallic, high gloss chromed.
Where L ≥ 60 mm the thread length is 60 mm.

On request:
Other internal threads, colours and special versions.
Dimension "H1" available in other lengths at extra charge.

lift to disengage

black satin finish Δ = 1

orange Δ = 2

RAL 2004

ruby red Δ = 27

RAL 3003

silver metallic Δ = 3

high-gloss chromed Δ = 6

Order No.	Size	X	T	D	D1	D2	H	H1	H2	H3	H4	A	A1	B	No. of teeth
06450-003Δ	0	M3	9	10	13	14	24,5	4	14,5	30	33	30	37	7	16
06450-004Δ	0	M4	9	10	13	14	24,5	4	14,5	30	33	30	37	7	16
06450-005Δ	0	M5	9	10	13	14	24,5	4	14,5	30	33	30	37	7	16
06450-104Δ	1	M4	9	10	13	14	24,5	4	14,5	31	34	40	47	7	16
06450-105Δ	1	M5	9	10	13	14	24,5	4	14,5	31	34	40	47	7	16
06450-106Δ	1	M6	9	10	13	14	24,5	4	14,5	31	34	40	47	7	16
06450-206Δ	2	M6	12	13,5	18,5	19	28,5	6,5	17,5	42,5	45,5	65	74,5	9,5	20
06450-208Δ	2	M8	12	13,5	18,5	19	28,5	6,5	17,5	42,5	45,5	65	74,5	9,5	20
06450-308Δ	3	M8	14	16	21	22	37	10	24	54,5	58,5	80	91	11	22
06450-310Δ	3	M10	14	16	21	22	37	10	24	54,5	58,5	80	91	11	22
06450-410Δ	4	M10	17	19	27	27,5	43	10	27	63	67,5	95	109	13	24
06450-412Δ	4	M12	17	19	27	27,5	43	10	27	63	67,5	95	109	13	24
06450-512Δ	5	M12	23	23	31	32	49	12	31,5	73	77,5	110	126	15	26
06450-516Δ	5	M16	23	23	31	32	49	12	31,5	73	77,5	110	126	15	26

Clamping levers with protective cap

internal thread

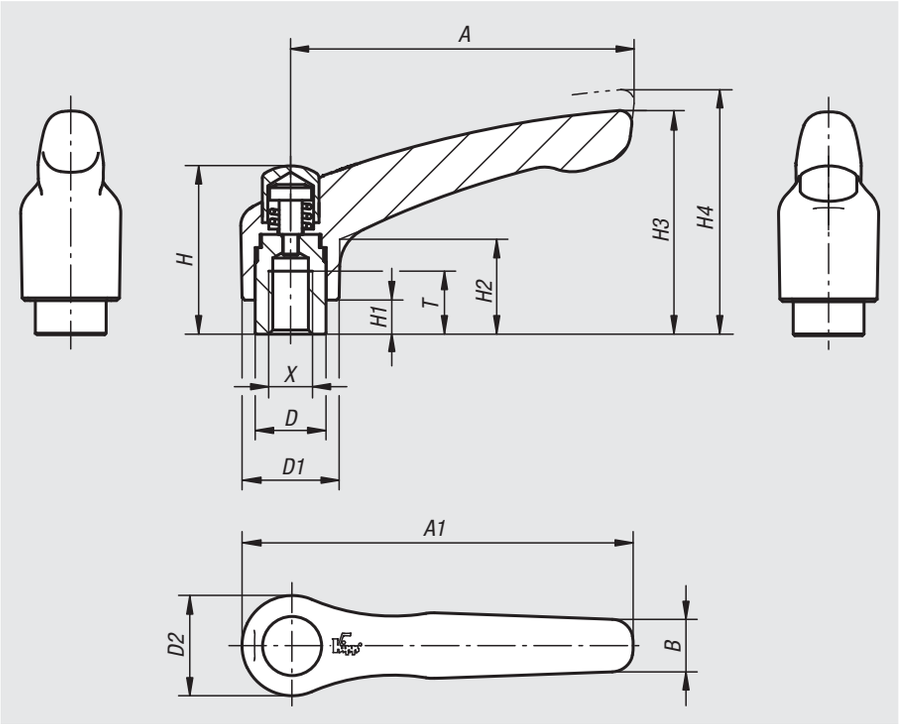

Material:
Handle die-cast zinc DIN EN 12844.
Steel parts grade 5.8.
Protective cap stainless steel 1.4305.

Version:
Handle plastic-coated.
Steel parts black oxidised.
Protective cap stainless steel, bright.

Sample order:
nlm 06450-92061

Note:
Standard colours are:
black satin finish, orange RAL 2004.

On request:
Other internal threads, colours and special versions.
Dimension “H1” available in other lengths at extra charge.

lift to disengage

Order No. black satin finish	Order No. pure orange RAL 2004	Size	X	T	D	D1	D2	H	H1	H2	H3	H4	A	A1	B	No. of teeth
06450-92061	**06450-92062**	2	M6	12	13,5	18,5	19	32	6,5	17,5	42,5	45,5	65	74,5	9,5	20
06450-92081	**06450-92082**	2	M8	12	13,5	18,5	19	32	6,5	17,5	42,5	45,5	65	74,5	9,5	20
06450-93081	**06450-93082**	3	M8	14	16	21	22	41,5	10	24	54,5	58,5	80	91	11	22
06450-93101	**06450-93102**	3	M10	14	16	21	22	41,5	10	24	54,5	58,5	80	91	11	22

Clamping levers

internal thread, steel parts stainless steel

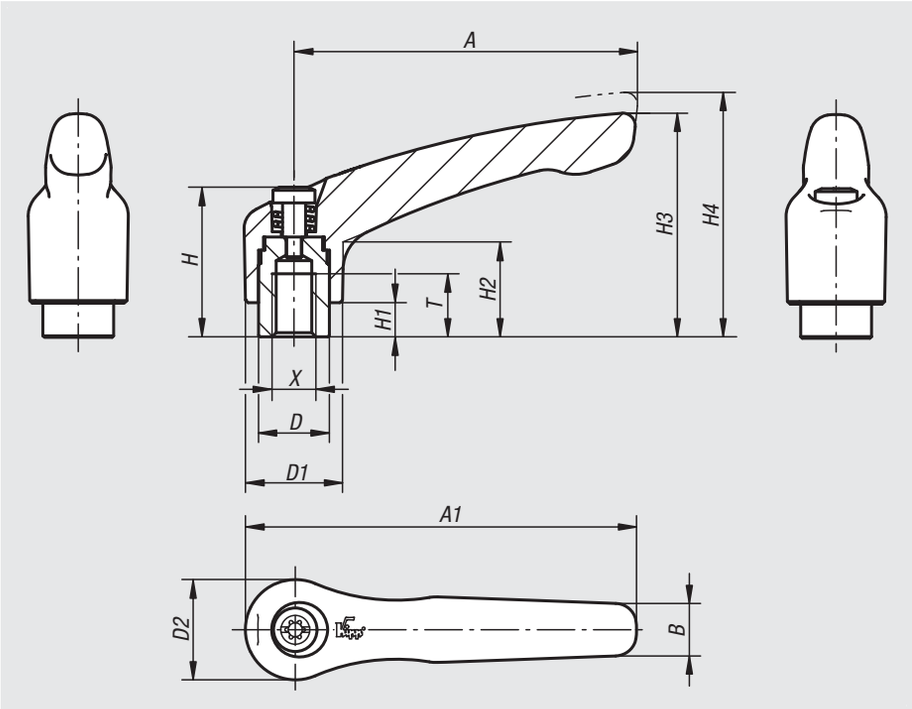

Material:
Handle die-cast zinc DIN EN 12844.
Steel parts stainless steel 1.4305.

Version:
Handle plastic-coated or high-gloss chromed.
Steel parts bright.

Sample order:
nlm 06451-1051 (clamping lever, black satin finish)

Note:
Δ Add the desired lever colour here.
Standard colours are:
black satin finish, orange RAL 2004, ruby red RAL 3003, silver metallic, high gloss chromed.
Where L ≥ 60 mm the thread length is 60 mm.

On request:
Other internal threads, colours and special versions.
Dimension "H1" available in other lengths at extra charge.

lift to disengage

black satin finish Δ = 1

orange Δ = 2

RAL 2004

ruby red Δ = 27

RAL 3003

silver metallic Δ = 3

high-gloss chromed Δ = 6

Order No.	Size	X	T	D	D1	D2	H	H1	H2	H3	H4	A	A1	B	No. of teeth
06451-003Δ	0	M3	9	10	13	14	24,5	4	14,5	30	33	30	37	7	16
06451-004Δ	0	M4	9	10	13	14	24,5	4	14,5	30	33	30	37	7	16
06451-005Δ	0	M5	9	10	13	14	24,5	4	14,5	30	33	30	37	7	16
06451-104Δ	1	M4	9	10	13	14	24,5	4	14,5	31	34	40	47	7	16
06451-105Δ	1	M5	9	10	13	14	24,5	4	14,5	31	34	40	47	7	16
06451-106Δ	1	M6	9	10	13	14	24,5	4	14,5	31	34	40	47	7	16
06451-206Δ	2	M6	12	13,5	18,5	19	28,5	6,5	17,5	42,5	45,5	65	74,5	9,5	20
06451-208Δ	2	M8	12	13,5	18,5	19	28,5	6,5	17,5	42,5	45,5	65	74,5	9,5	20
06451-308Δ	3	M8	14	16	21	22	37	10	24	54,5	58,5	80	91	11	22
06451-310Δ	3	M10	14	16	21	22	37	10	24	54,5	58,5	80	91	11	22
06451-410Δ	4	M10	17	19	27	27,5	43	10	27	63	67,5	95	109	13	24
06451-412Δ	4	M12	17	19	27	27,5	43	10	27	63	67,5	95	109	13	24
06451-512Δ	5	M12	23	23	31	32	49	12	31,5	73	77,5	110	126	15	26
06451-516Δ	5	M16	23	23	31	32	49	12	31,5	73	77,5	110	126	15	26

Clamping levers with protective cap

internal thread, steel parts stainless steel

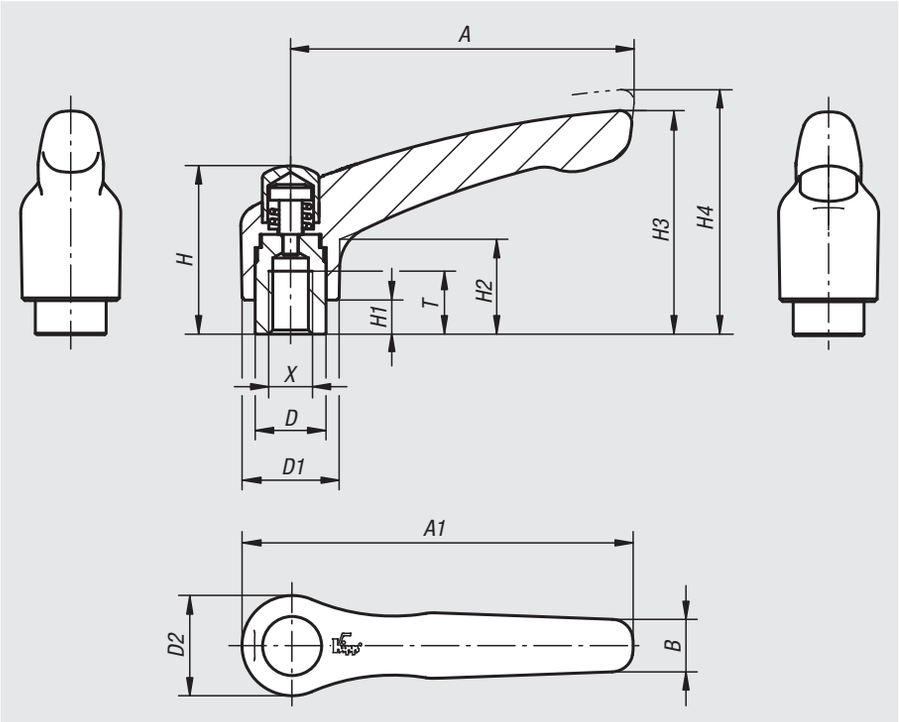

Material:
Handle die-cast zinc DIN EN 12844.
Steel parts stainless steel 1.4305.
Protective cap stainless steel 1.4305.

Version:
Handle plastic-coated.
Steel parts bright.

Sample order:
nlm 06451-92081

Note:
Standard colours are:
black satin finish, orange RAL 2004.

On request:
Other internal threads, colours and special versions.
Dimension “H1” available in other lengths at extra charge.

lift to
disengage

Order No. black satin finish	Order No. pure orange RAL 2004	Size	X	T	D	D1	D2	H	H1	H2	H3	H4	A	A1	B	No. of teeth
06451-92061	**06451-92062**	2	M6	12	13,5	18,5	19	32	6,5	17,5	42,5	45,5	65	74,5	9,5	20
06451-92081	**06451-92082**	2	M8	12	13,5	18,5	19	32	6,5	17,5	42,5	45,5	65	74,5	9,5	20
06451-93081	**06451-93082**	3	M8	14	16	21	22	41,5	10	24	54,5	58,5	80	91	11	22
06451-93101	**06451-93102**	3	M10	14	16	21	22	41,5	10	24	54,5	58,5	80	91	11	22

Clamping levers

with internal thread, stainless steel

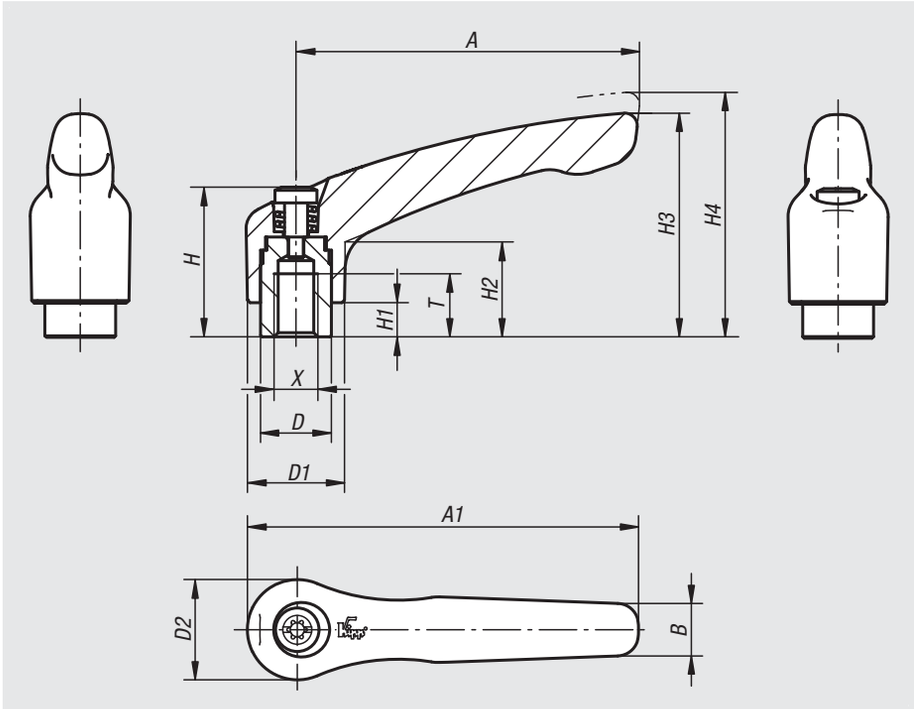

Material:
Handle investment cast 1.4308.
Other steel parts 1.4305.

Version:
Handle electropolished or blasted.
Metal parts bright.

Sample order:
nlm 06454-105

On request:
Other internal threads and special versions.
Dimension “H1” available in other lengths at extra charge.

lift to disengage

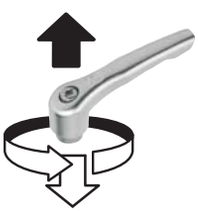

Order No.	Surface	Size	X	T	D	D1	D2	H	H1	H2	H3	H4	A	A1	B	No. of teeth
06454-104	electropolished	1	M4	9	10	13	14	24,5	4	14,5	31	34	40	47	7	16
06454-105	electropolished	1	M5	9	10	13	14	24,5	4	14,5	31	34	40	47	7	16
06454-106	electropolished	1	M6	9	10	13	14	24,5	4	14,5	31	34	40	47	7	16
06454-206	electropolished	2	M6	12	13,5	18,5	19	28,5	6,5	17,5	42,5	45,5	65	74,5	10	20
06454-208	electropolished	2	M8	12	13,5	18,5	19	28,5	6,5	17,5	42,5	45,5	65	74,5	10	20
06454-308	electropolished	3	M8	14	16	21	22	37	10	24	54,5	58,5	80	91	11	22
06454-310	electropolished	3	M10	14	16	21	22	37	10	24	54,5	58,5	80	91	11	22
06454-410	electropolished	4	M10	17	19	27	27,5	43	10	27	63	67,5	95	109	13	24
06454-412	electropolished	4	M12	17	19	27	27,5	43	10	27	63	67,5	95	109	13	24
06454-512	electropolished	5	M12	23	23	31	32	49	12	31,5	73	77,5	110	126	15	26
06454-516	electropolished	5	M16	23	23	31	32	49	12	31,5	73	77,5	110	126	15	26
06454-104153	blasted	1	M4	9	10	13	14	24,5	4	14,5	31	34	40	47	7	16
06454-105153	blasted	1	M5	9	10	13	14	24,5	4	14,5	31	34	40	47	7	16
06454-106153	blasted	1	M6	9	10	13	14	24,5	4	14,5	31	34	40	47	7	16
06454-206153	blasted	2	M6	12	13,5	18,5	19	28,5	6,5	17,5	42,5	45,5	65	74,5	10	20
06454-208153	blasted	2	M8	12	13,5	18,5	19	28,5	6,5	17,5	42,5	45,5	65	74,5	10	20
06454-308153	blasted	3	M8	14	16	21	22	37	10	24	54,5	58,5	80	91	11	22
06454-310153	blasted	3	M10	14	16	21	22	37	10	24	54,5	58,5	80	91	11	22
06454-410153	blasted	4	M10	17	19	27	27,5	43	10	27	63	67,5	95	109	13	24
06454-412153	blasted	4	M12	17	19	27	27,5	43	10	27	63	67,5	95	109	13	24
06454-512153	blasted	5	M12	23	23	31	32	49	12	31,5	73	77,5	110	126	15	26
06454-516153	blasted	5	M16	23	23	31	32	49	12	31,5	73	77,5	110	126	15	26

Clamping levers with protective cap

with internal thread, stainless steel

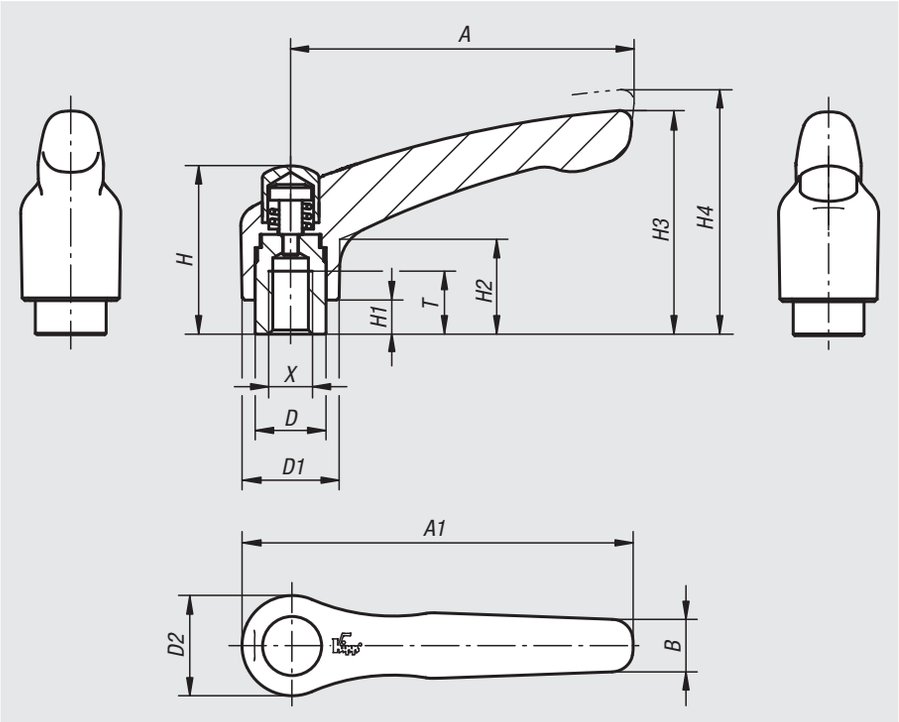

Material:
Handle investment cast 1.4308.
Other steel parts 1.4305.

Version:
Handle electrolytic polished.
Steel parts bright.

Sample order:
nlm 06454-9208

On request:
Other internal threads and special versions.
Dimension “H1” available in other lengths at extra charge.

lift to disengage

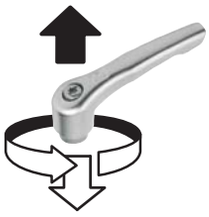

Order No.	Size	X	T	D	D1	D2	H	H1	H2	H3	H4	A	A1	B	No. of teeth
06454-9206	2	M6	12	13,5	18,5	19	32	6,5	17,5	42,5	45,5	65	74,5	10	20
06454-9208	2	M8	12	13,5	18,5	19	32	6,5	17,5	42,5	45,5	65	74,5	10	20
06454-9308	3	M8	14	16	21	22	41,5	10	24	54,5	58,5	80	91	11	22
06454-9310	3	M10	14	16	21	22	41,5	10	24	54,5	58,5	80	91	11	22

Clamping levers flat

external thread

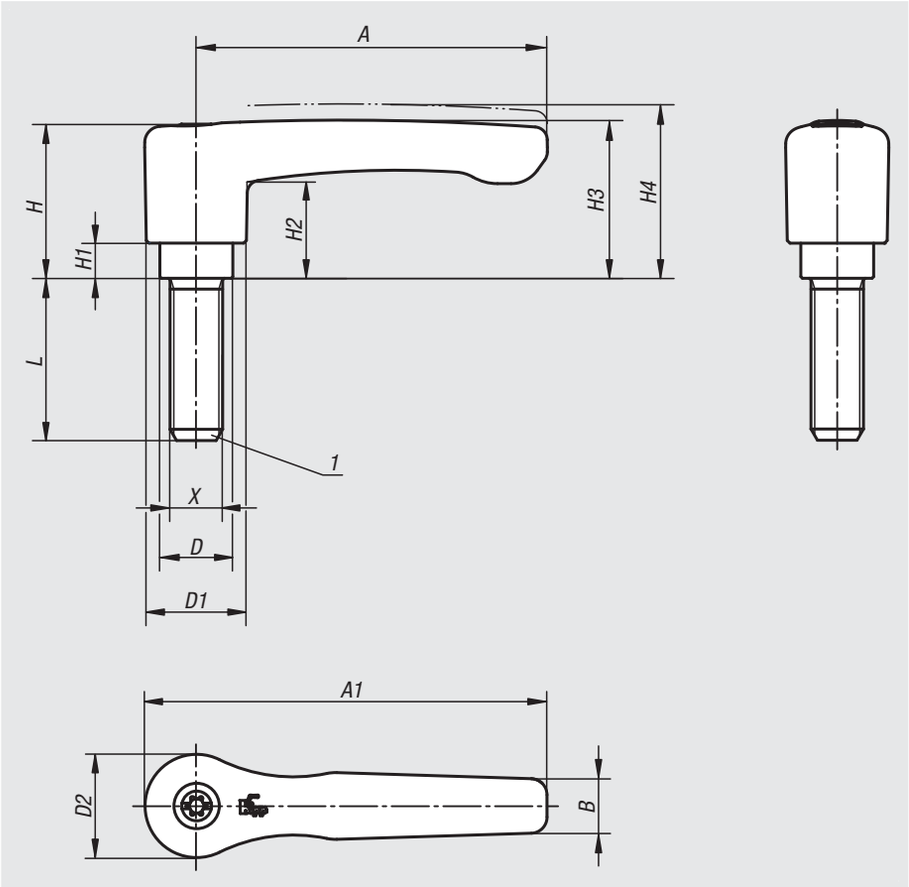

Material:
Handle die-cast zinc DIN EN 12844.
Steel parts grade 5.8.

Version:
Handle plastic-coated,
steel parts black oxidised.

Sample order:
nlm 06458-2061X15 (include length L)

Note:
Standard colours are:
black satin finish, orange RAL 2004.
Where L ≥ 60 mm the thread length is 60 mm.

On request:
Other external threads, screw lengths, colours and special versions.
Dimension “H1” available in other lengths at extra charge.

Drawing reference:
1) flat point DIN 78

lift to disengage

Order No. black satin finish	Order No. pure orange RAL 2004	Size	X	D	D1	D2	H	H1	H2	H3	H4	A	A1	B	No. of teeth	L
06458-2061X	**06458-2062X**	2	M6	13,5	18,5	19,1	28,5	6,5	17,8	29,2	32,2	65	74,5	10,1	20	15/20/25/30/35/40/45/50/55/60
06458-2081X	**06458-2082X**	2	M8	13,5	18,5	19,1	28,5	6,5	17,8	29,2	32,2	65	74,5	10,1	20	15/20/25/30/35/40/45/50/55/60
06458-2101X	**06458-2102X**	2	M10	13,5	18,5	19,1	28,5	6,5	17,8	29,2	32,2	65	74,5	10,1	20	15/20/25/30/35/40/45/50/55/60
06458-3081X	**06458-3082X**	3	M8	16	21,2	22	37	10	23,8	38	42	80	91	11,7	22	15/20/25/30/35/40/45/50/55/60
06458-3101X	**06458-3102X**	3	M10	16	21,2	22	37	10	23,8	38	42	80	91	11,7	22	15/20/25/30/35/40/45/50/55/60

Clamping levers flat

external thread, steel parts stainless steel

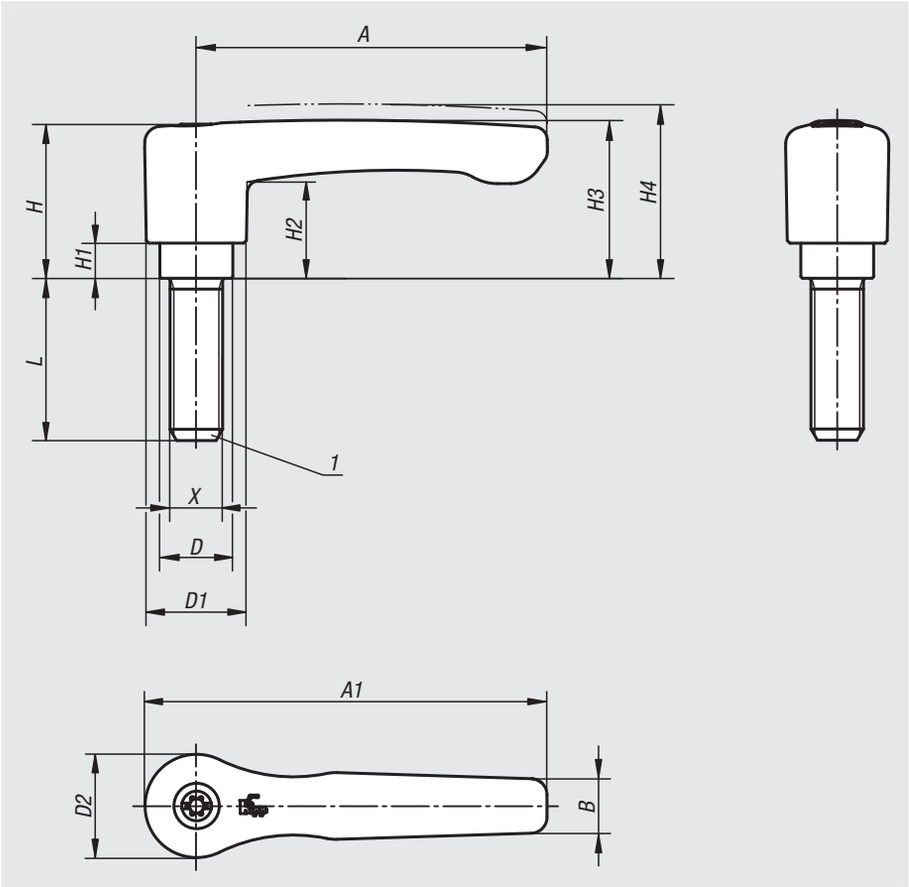

Material:
Handle die-cast zinc DIN EN 12844.
Steel parts stainless steel 1.4305.

Version:
Handle plastic-coated.
Steel parts bright.

Sample order:
nlm 06459-2061X15 (include length L)

Note:
Standard colours are:
black satin finish, orange RAL 2004.
Where L ≥ 60 mm the thread length is 60 mm.

On request:
Other external threads, screw lengths, colours and special versions.
Dimension "H1" available in other lengths at extra charge.

Drawing reference:
1) flat point DIN 78

lift to disengage

Order No. black satin finish	Order No. pure orange RAL 2004	Size	X	D	D1	D2	H	H1	H2	H3	H4	A	A1	B	No. of teeth	L
06459-2061X	**06459-2062X**	2	M6	13,5	18,5	19,1	28,5	6,5	17,8	29,2	32,2	65	74,5	10,1	20	15/20/25/30/40/50/60
06459-2081X	**06459-2082X**	2	M8	13,5	18,5	19,1	28,5	6,5	17,8	29,2	32,2	65	74,5	10,1	20	15/20/25/30/40/50/60
06459-2101X	**06459-2102X**	2	M10	13,5	18,5	19,1	28,5	6,5	17,8	29,2	32,2	65	74,5	10,1	20	20/25/30/40/50/60
06459-3081X	**06459-3082X**	3	M8	16	21,2	22	37	10	23,8	38	42	80	91	11,7	22	20/25/30/40/50/60
06459-3101X	**06459-3102X**	3	M10	16	21,2	22	37	10	23,8	38	42	80	91	11,7	22	20/25/30/40/50/60

Clamping levers

external thread

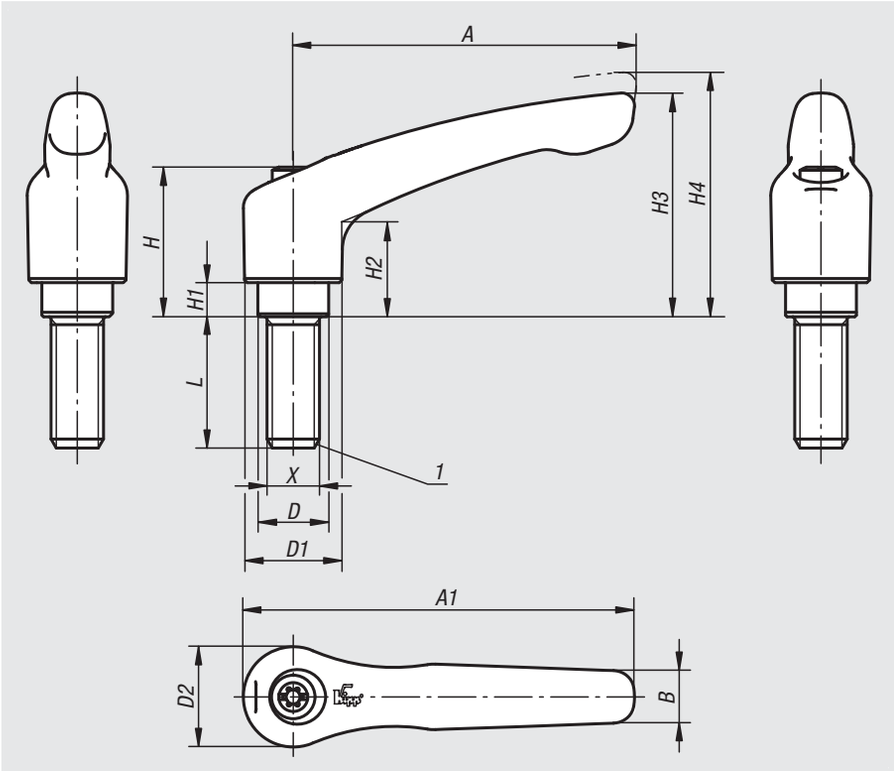

Material:
Handle die-cast zinc DIN EN 12844.
Steel parts grade 5.8.

Version:
Handle plastic-coated or high-gloss chromed.
Steel parts black oxidised.

Sample order:
nlm 06460-0041X10 (clamping lever, black satin finish; include length L)

Note:
Δ Add the desired lever colour here.
Standard colours are:
black satin finish, orange RAL 2004, ruby red RAL 3003, silver metallic, high gloss chromed.
Where L ≥ 60 mm the thread length is 60 mm.

On request:
Other external threads, screw lengths, colours and special versions.
Dimension "H1" available in other lengths at extra charge.

Drawing reference:
1) flat point DIN 78

lift to disengage

black satin finish Δ = 1

orange Δ = 2

RAL 2004

ruby red Δ = 27

RAL 3003

silver metallic Δ = 3

high-gloss chromed Δ = 6

Order No.	Size	X	D	D1	D2	H	H1	H2	H3	H4	A	A1	B	L	No. of teeth
06460-004ΔX	0	M4	10	13	14	24,5	4	14,5	30	33	30	37	7	10/15/20/25/30/35/40/45/50	16
06460-005ΔX	0	M5	10	13	14	24,5	4	14,5	30	33	30	37	7	10/15/20/25/30/35/40/45/50	16
06460-105ΔX	1	M5	10	13	14	24,5	4	14,5	31	34	40	47	7	10/15/20/25/30/35/40/45/50	16
06460-106ΔX	1	M6	10	13	14	24,5	4	14,5	31	34	40	47	7	10/15/20/25/30/35/40/45/50	16
06460-206ΔX	2	M6	13,5	18,5	19	28,5	6,5	17,5	42,5	45,5	65	74,5	9,5	15/20/25/30/35/40/45/50/55/60	20
06460-208ΔX	2	M8	13,5	18,5	19	28,5	6,5	17,5	42,5	45,5	65	74,5	9,5	15/20/25/30/35/40/45/50/55/60	20
06460-210ΔX	2	M10	13,5	18,5	19	28,5	6,5	17,5	42,5	45,5	65	74,5	9,5	15/20/25/30/35/40/45/50/55/60	20
06460-308ΔX	3	M8	16	21	22	37	10	24	54,5	58,5	80	91	11	15/20/25/30/35/40/45/50/55/60	22
06460-310ΔX	3	M10	16	21	22	37	10	24	54,5	58,5	80	91	11	15/20/25/30/35/40/45/50/55/60	22
06460-410ΔX	4	M10	19	27	27,5	43	10	27	63	67,5	95	109	13	20/25/30/35/40/45/50/55/60/70/80/90	24
06460-412ΔX	4	M12	19	27	27,5	43	10	27	63	67,5	95	109	13	20/25/30/35/40/45/50/55/60/70/80/90	24
06460-512ΔX	5	M12	23	31	32	49	12	31,5	73	77,5	110	126	15	25/30/35/40/45/50/55/60/70/80/90	26
06460-516ΔX	5	M16	23	31	32	49	12	31,5	73	77,5	110	126	15	25/30/35/40/45/50/55/60/70/80/90	26

Clamping levers with protective cap

external thread

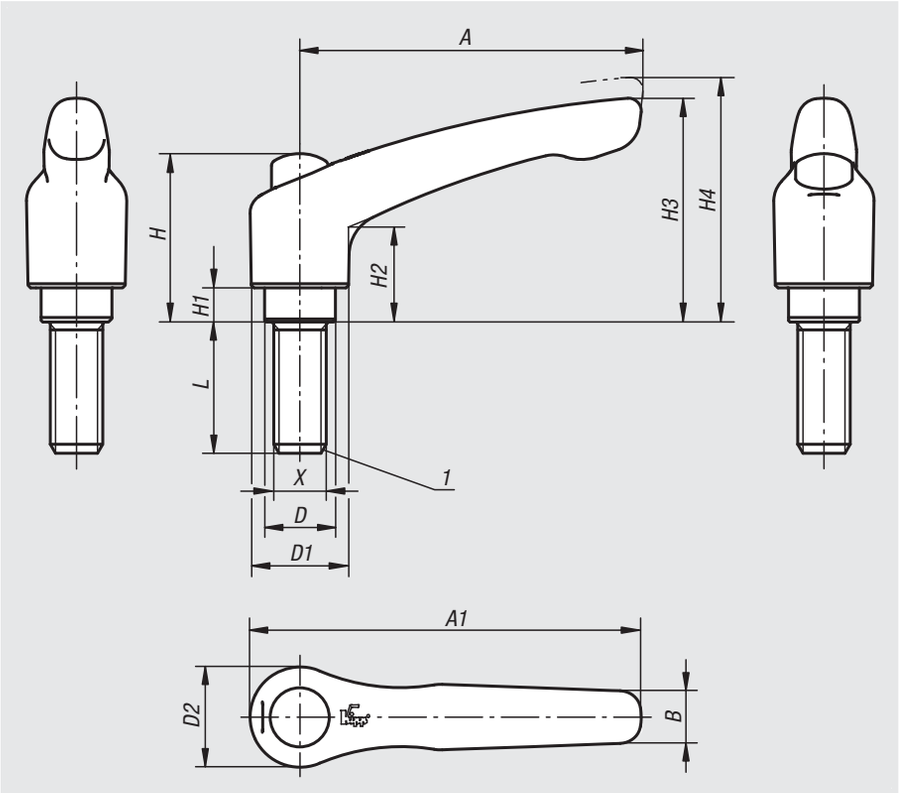

Material:
Handle die-cast zinc DIN EN 12844.
Steel parts grade 5.8.
Protective cap stainless steel 1.4305.

Version:
Handle plastic-coated.
Steel parts black oxidised.
Protective cap stainless steel, bright.

Sample order:
nlm 06460-92081X30 (include length L)

Note:
Standard colours are:
black satin finish, orange RAL 2004.
Where L is ≥ 60 mm the thread length is 60 mm.

On request:
Other external threads, screw lengths, colours and special versions.
Dimension "H1" available in other lengths at extra charge.

Drawing reference:
1) flat point DIN 78

lift to disengage

Specifications

Size	X	D	D1	D2	H	H1	H2	H3	H4	A	A1	B	No. of teeth
2	M6/M8/M10	13,5	18,5	19	32	6,5	17,5	42,5	45,5	65	74,5	9,5	20
3	M8/M10	16	21	22	41,5	10	24	54,5	58,5	80	91	11	22

Order No. black satin finish	Order No. pure orange RAL 2004	Size	X	L
06460-92061X	**06460-92062X**	2	M6	15/20/25/30/35/40/45/50/55/60
06460-92081X	**06460-92082X**	2	M8	15/20/25/30/35/40/45/50/55/60
06460-92101X	**06460-92102X**	2	M10	15/20/25/30/35/40/45/50/55/60
06460-93081X	**06460-93082X**	3	M8	15/20/25/30/35/40/45/50/55/60
06460-93101X	**06460-93102X**	3	M10	15/20/25/30/35/40/45/50/55/60

Clamping levers

external thread, steel parts stainless steel

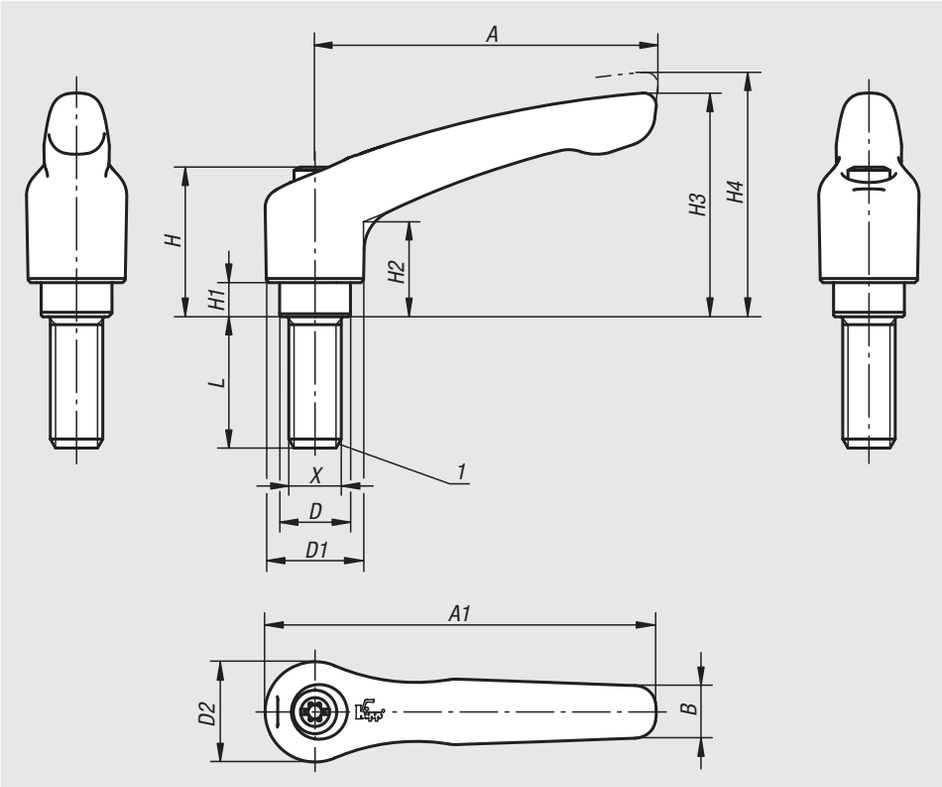

Material:
Handle die-cast zinc DIN EN 12844.
Steel parts stainless steel 1.4305.

Version:
Handle plastic-coated or high-gloss chromed.
Steel parts bright.

Sample order:
nlm 06461-1051X25 (clamping lever, black satin finish; include length L)

Note:
Δ Add the desired lever colour here.
Standard colours are:
black satin finish, orange RAL 2004, ruby red RAL 3003, silver metallic, high gloss chromed.
Where L ≥ 60 mm the thread length is 60 mm.

On request:
Other external threads, screw lengths, colours and special versions.
Dimension "H1" available in other lengths at extra charge.

Drawing reference:
1) flat point DIN 78

lift to disengage

black satin finish Δ = 1	orange Δ = 2	ruby red Δ = 27	silver metallic Δ = 3	high-gloss chromed Δ = 6
	RAL 2004	RAL 3003		

Order No.	Size	X	D	D1	D2	H	H1	H2	H3	H4	A	A1	B	L	No. of teeth
06461-004ΔX	0	M4	10	13	14	24,5	4	14,5	30	33	30	37	7	10/15/20/25	16
06461-005ΔX	0	M5	10	13	14	24,5	4	14,5	30	33	30	37	7	10/15/20/25	16
06461-105ΔX	1	M5	10	13	14	24,5	4	14,5	31	34	40	47	7	10/15/20/25	16
06461-106ΔX	1	M6	10	13	14	24,5	4	14,5	31	34	40	47	7	10/15/20/25/30/40/50	16
06461-206ΔX	2	M6	13,5	18,5	19	28,5	6,5	17,5	42,5	45,5	65	74,5	9,5	15/20/25/30/40/50/60	20
06461-208ΔX	2	M8	13,5	18,5	19	28,5	6,5	17,5	42,5	45,5	65	74,5	9,5	15/20/25/30/40/50/60	20
06461-210ΔX	2	M10	13,5	18,5	19	28,5	6,5	17,5	42,5	45,5	65	74,5	9,5	20/25/30/40/50/60	20
06461-308ΔX	3	M8	16	21	22	37	10	24	54,5	58,5	80	91	11	20/25/30/40/50/60	22
06461-310ΔX	3	M10	16	21	22	37	10	24	54,5	58,5	80	91	11	20/25/30/40/50/60	22
06461-412ΔX	4	M12	19	27	27,5	43	10	27	63	67,5	95	109	13	25/30/40/50/60	24
06461-516ΔX	5	M16	23	31	32	49	12	31,5	73	77,5	110	126	15	30/40/50/60	26

Clamping levers with protective cap

with external thread, metal parts stainless steel

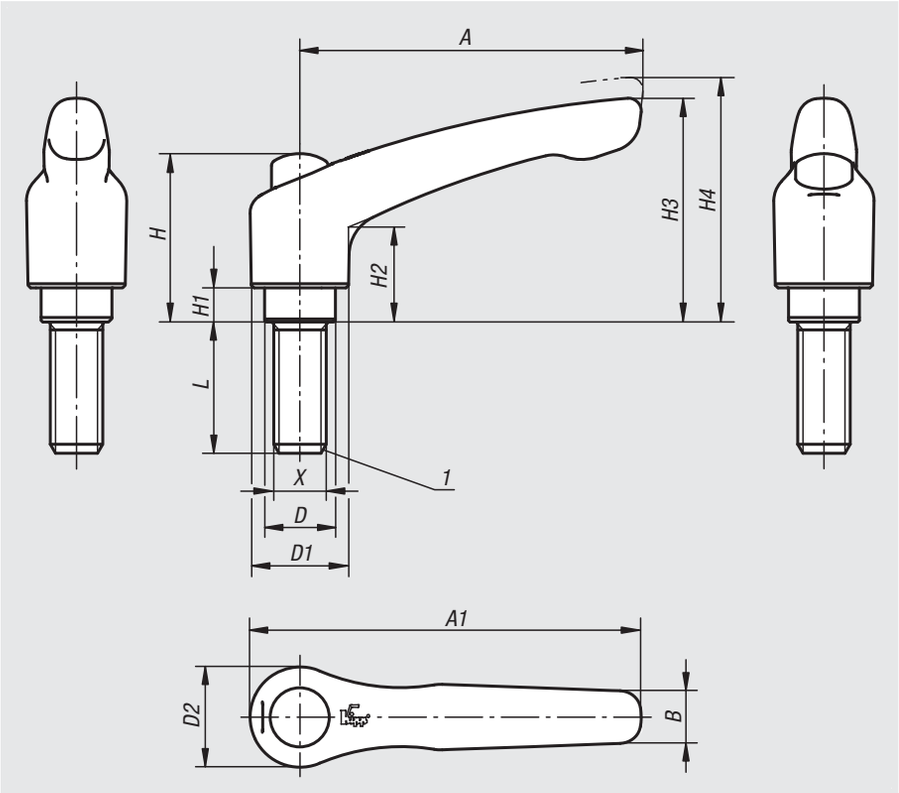

Material:
Handle die-cast zinc DIN EN 12844.
Steel parts stainless steel 1.4305.
Protective cap stainless steel 1.4305.

Version:
Handle plastic-coated.
Steel parts bright.

Sample order:
nlm 06461-92081X30 (include length L)

Note:
Standard colours are:
black satin finish, orange RAL 2004.
Where L is ≥ 60 mm the thread length is 60 mm.

On request:
Other external threads, screw lengths, colours and special versions.
Dimension “H1” available in other lengths at extra charge.

Drawing reference:
1) flat point DIN 78

lift to disengage

Specifications

Size	X	D	D1	D2	H	H1	H2	H3	H4	A	A1	B	No. of teeth
2	M6/M8/M10	13,5	18,5	19	32	6,5	17,5	42,5	45,5	65	74,5	9,5	20
3	M8/M10	16	21	22	41,5	10	24	54,5	58,5	80	91	11	22

Order No. black satin finish	Order No. pure orange RAL 2004	Size	X	L
06461-92061X	**06461-92062X**	2	M6	15/20/25/30/40/50/60
06461-92081X	**06461-92082X**	2	M8	15/20/25/30/40/50/60
06461-92101X	**06461-92102X**	2	M10	20/25/30/40/50/60
06461-93081X	**06461-93082X**	3	M8	20/25/30/40/50/60
06461-93101X	**06461-93102X**	3	M10	20/25/30/40/50/60

Clamping levers

with external thread, stainless steel

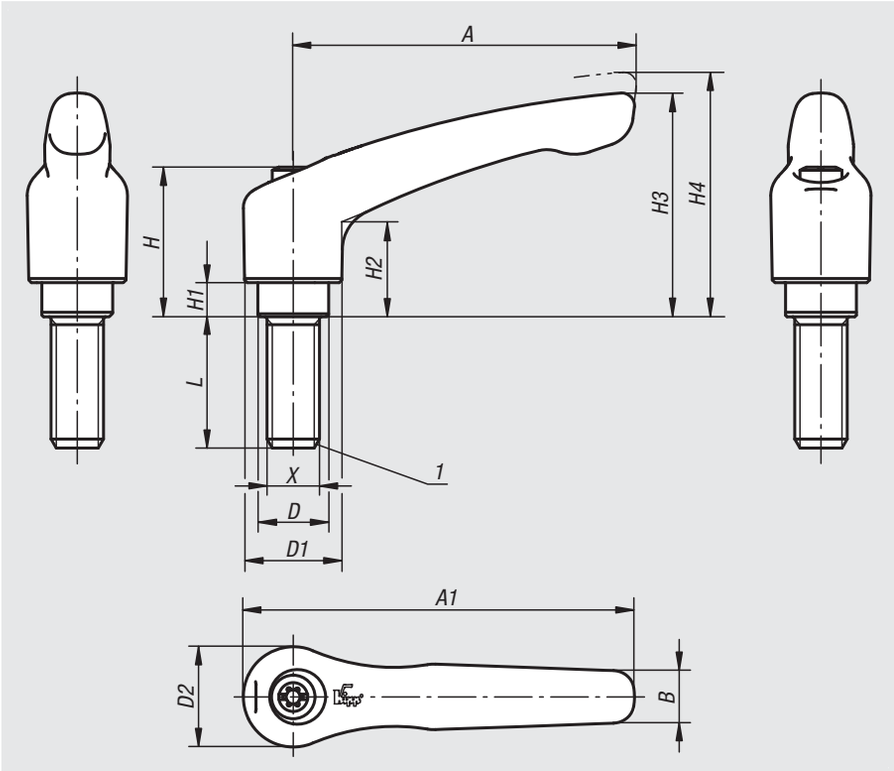

Material:
Handle investment cast 1.4308.
Other steel parts 1.4305.

Version:
Handle electropolished or blasted.
Metal parts bright.

Sample order:
nlm 06464-105X10 (include length L)

Note:
Where L ≥ 60 mm the thread length is 60 mm.

On request:
Other external threads, screw lengths and special versions.
Dimension “H1” available in other lengths at extra charge.

Drawing reference:
1) flat point DIN 78

lift to disengage

Order No.	Version	Size	X	D	D1	D2	H	H1	H2	H3	H4	A	A1	B	No. of teeth	L
06464-105X	polished	1	M5	10	13	14	24,5	4	14,5	31	34	40	47	7	16	10/15/20/25
06464-106X	polished	1	M6	10	13	14	24,5	4	14,5	31	34	40	47	7	16	10/15/20/25/30/40/50
06464-206X	polished	2	M6	13,5	18,5	19	28,5	6,5	17,5	42,5	45,5	65	74,5	10	20	15/20/25/30/40/50/60
06464-208X	polished	2	M8	13,5	18,5	19	28,5	6,5	17,5	42,5	45,5	65	74,5	10	20	15/20/25/30/40/50/60
06464-210X	polished	2	M10	13,5	18,5	19	28,5	6,5	17,5	42,5	45,5	65	74,5	10	20	20/25/30/40/50/60
06464-308X	polished	3	M8	16	21	22	37	10	24	54,5	58,5	80	91	11	22	20/25/30/40/50/60
06464-310X	polished	3	M10	16	21	22	37	10	24	54,5	58,5	80	91	11	22	20/25/30/40/50/60
06464-412X	polished	4	M12	19	27	27,5	43	10	27	63	67,5	95	109	13	24	25/30/40/50/60
06464-516X	polished	5	M16	23	31	32	49	12	31,5	73	77,5	110	126	15	26	30/40/50/60
06464-105153X	blasted	1	M5	10	13	14	24,5	4	14,5	31	34	40	47	7	16	10/15/20/25
06464-106153X	blasted	1	M6	10	13	14	24,5	4	14,5	31	34	40	47	7	16	10/15/20/25/30/40/50
06464-206153X	blasted	2	M6	13,5	18,5	19	28,5	6,5	17,5	42,5	45,5	65	74,5	10	20	15/20/25/30/40/50/60
06464-208153X	blasted	2	M8	13,5	18,5	19	28,5	6,5	17,5	42,5	45,5	65	74,5	10	20	15/20/25/30/40/50/60
06464-210153X	blasted	2	M10	13,5	18,5	19	28,5	6,5	17,5	42,5	45,5	65	74,5	10	20	20/25/30/40/50/60
06464-308153X	blasted	3	M8	16	21	22	37	10	24	54,5	58,5	80	91	11	22	20/25/30/40/50/60
06464-310153X	blasted	3	M10	16	21	22	37	10	24	54,5	58,5	80	91	11	22	20/25/30/40/50/60
06464-412153X	blasted	4	M12	19	27	27,5	43	10	27	63	67,5	95	109	13	24	25/30/40/50/60
06464-516153X	blasted	5	M16	23	31	32	49	12	31,5	73	77,5	110	126	15	26	30/40/50/60

Clamping levers with protective cap

with external thread, stainless steel

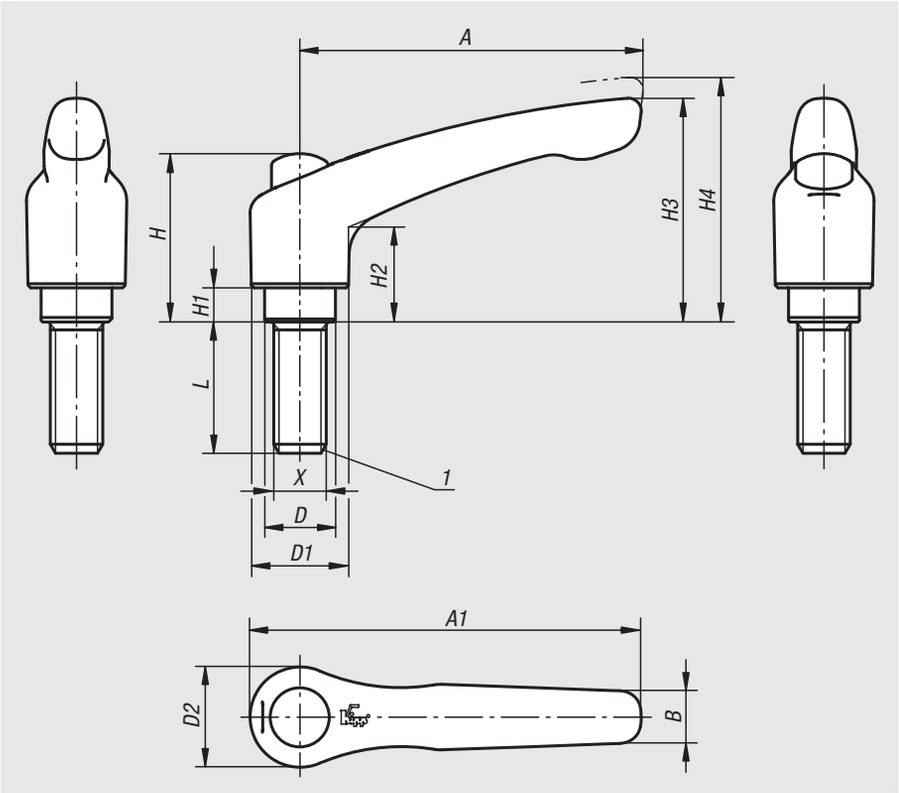

Material:
Handle investment cast 1.4308.
Other steel parts 1.4305.

Version:
Handle electrolytic polished.
Steel parts bright.

Sample order:
nlm 06464-9208X30 (include length L)

Note:
Where L ≥ 60 mm the thread length is 60 mm.

On request:
Other external threads, screw lengths and special versions.
Dimension "H1" available in other lengths at extra charge.

Drawing reference:
1) flat point DIN 78

lift to disengage

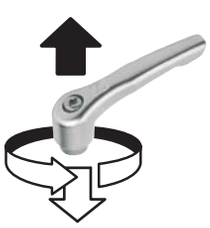

Order No.	Size	X	D	D1	D2	H	H1	H2	H3	H4	A	A1	B	No. of teeth	L
06464-9206X	2	M6	13,5	18,5	19	32	6,5	17,5	42,5	45,5	65	74,5	10	20	15/20/25/30/40/50/60
06464-9208X	2	M8	13,5	18,5	19	32	6,5	17,5	42,5	45,5	65	74,5	10	20	15/20/25/30/40/50/60
06464-9210X	2	M10	13,5	18,5	19	32	6,5	17,5	42,5	45,5	65	74,5	10	20	20/25/30/40/50/60
06464-9308X	3	M8	16	21	22	41,5	10	24	54,5	58,5	80	91	11	22	20/25/30/40/50/60
06464-9310X	3	M10	16	21	22	41,5	10	24	54,5	58,5	80	91	11	22	20/25/30/40/50/60

Ratchet levers

Material:
Housing carbon steel, tension nut and tension pin case-hardened steel.

Version:
Black oxidised.
Matt-finished or high-polish chrome-plated versions available at extra charge.

Sample order:
nlm 06470-316

Note:
Tension Pin A standard version (for ratchet action): Use for clamping and releasing in limited space and when considerable travel is involved. In order to change the tightening direction, the handle must be reversed by 180°.

Tension Pin B special version:
Use for clamping and releasing in limited space and when short travel is involved. The handle is not reversed in order to change the tightening direction. It must be pulled out before it can be engaged in the next slot.

On request:
Other internal threads, reamed holes and square sockets.
Dimension “E” available in other lengths at extra charge.
Special version: Tension pin B.

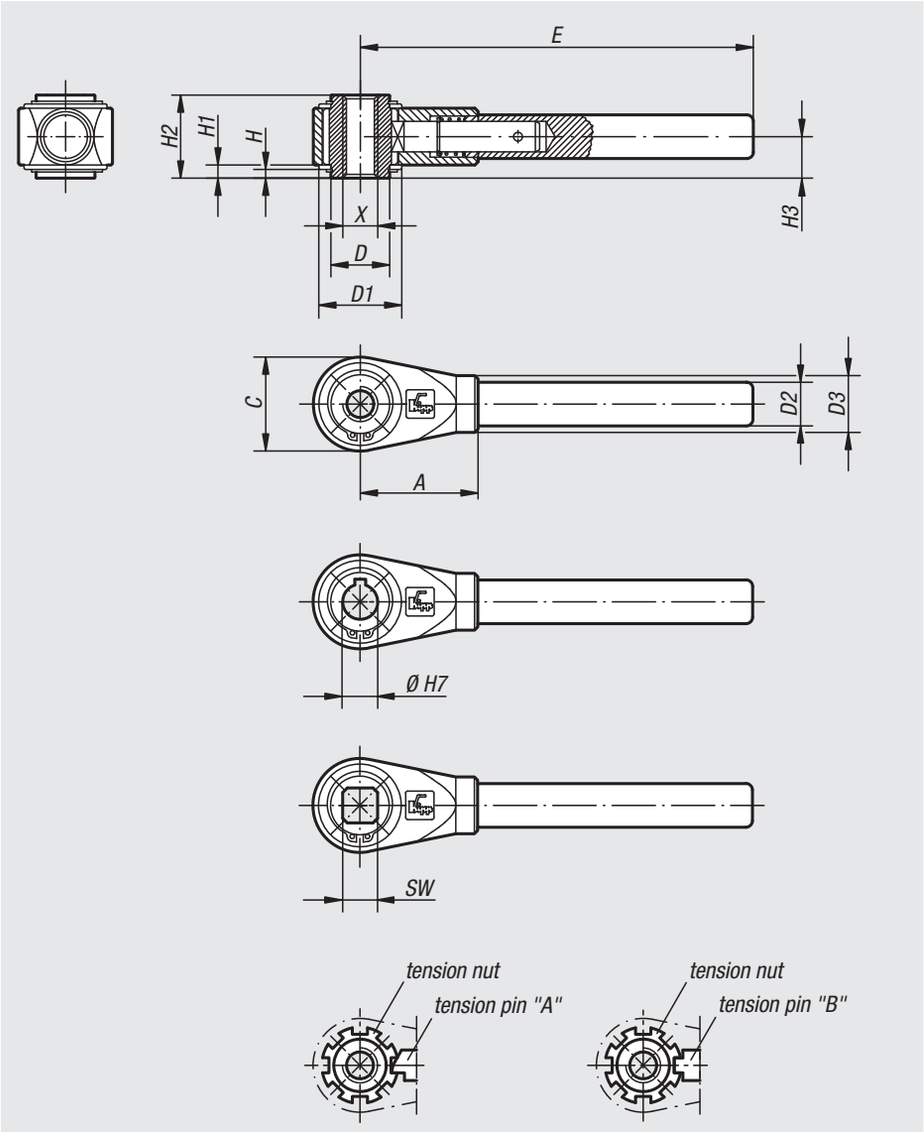

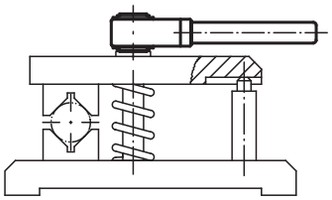

Ratchet levers

Ratchet levers with internal thread

Order No.	Size	X	D	D1	D2	D3	H	H1	H2	H3	C	A	E	No. of index slots
06470-310	1	M10	22	33	17	22	3	4,5	31	15,5	36	48	150	7
06470-312	1	M12	22	33	17	22	3	4,5	31	15,5	36	48	150	7
06470-314	2	M14	27	38	20	26	4	6	38	19	43	54	180	8
06470-316	2	M16	27	38	20	26	4	6	38	19	43	54	180	8
06470-318	3	M18	35	45	24	30	4	6	42	21	51	70	230	8
06470-320	3	M20	35	45	24	30	4	6	42	21	51	70	230	8
06470-322	4	M22	42	56	28	35	4	6	47	23,5	61	80	300	9
06470-324	4	M24	42	56	28	35	4	6	47	23,5	61	80	300	9
06470-327	4	M27	42	56	28	35	4	6	47	23,5	61	80	300	9
06470-330	5	M30	60	75	32	38	5	7,5	53	26,5	82	110	400	11
06470-336	5	M36	60	75	32	38	5	7,5	53	26,5	82	110	400	11
06470-342	5	M42	60	75	32	38	5	7,5	53	26,5	82	110	400	11

Ratchet levers with reamed hole

Order No.	Size	Reamed hole H7 with DIN 6885-1 keyway	D	D1	D2	D3	H	H1	H2	H3	C	A	E	No. of index slots
06470-412	1	12	22	33	17	22	3	4,5	31	15,5	36	48	150	7
06470-414	2	14	27	38	20	26	4	6	38	19	43	54	180	8
06470-415	2	15	27	38	20	26	4	6	38	19	43	54	180	8
06470-416	2	16	27	38	20	26	4	6	38	19	43	54	180	8
06470-418	3	18	35	45	24	30	4	6	42	21	51	70	230	8
06470-420	3	20	35	45	24	30	4	6	42	21	51	70	230	8
06470-422	4	22	42	56	28	35	4	6	47	23,5	61	80	300	9
06470-425	4	25	42	56	28	35	4	6	47	23,5	61	80	300	9
06470-427	4	27	42	56	28	35	4	6	47	23,5	61	80	300	9
06470-430	5	30	60	75	32	38	5	7,5	53	26,5	82	110	400	11
06470-436	5	36	60	75	32	38	5	7,5	53	26,5	82	110	400	11

Ratchet levers with square socket

Order No.	Size	Square socket SW	D	D1	D2	D3	H	H1	H2	H3	C	A	E	No. of index slots
06470-510	1	10	22	33	17	22	3	4,5	31	15,5	36	48	150	7
06470-512	1	12	22	33	17	22	3	4,5	31	15,5	36	48	150	7
06470-513	2	13	27	38	20	26	4	6	38	19	43	54	180	8
06470-514	2	14	27	38	20	26	4	6	38	19	43	54	180	8
06470-517	3	17	35	45	24	30	4	6	42	21	51	70	230	8
06470-519	4	19	42	56	28	35	4	6	47	23,5	61	80	300	9
06470-520	4	20	42	56	28	35	4	6	47	23,5	61	80	300	9
06470-522	4	22	42	56	28	35	4	6	47	23,5	61	80	300	9
06470-524	4	24	42	56	28	35	4	6	47	23,5	61	80	300	9
06470-530	5	30	60	75	32	38	5	7,5	53	26,5	82	110	400	11
06470-532	5	32	60	75	32	38	5	7,5	53	26,5	82	110	400	11

Crank handles offset

similar to DIN 468

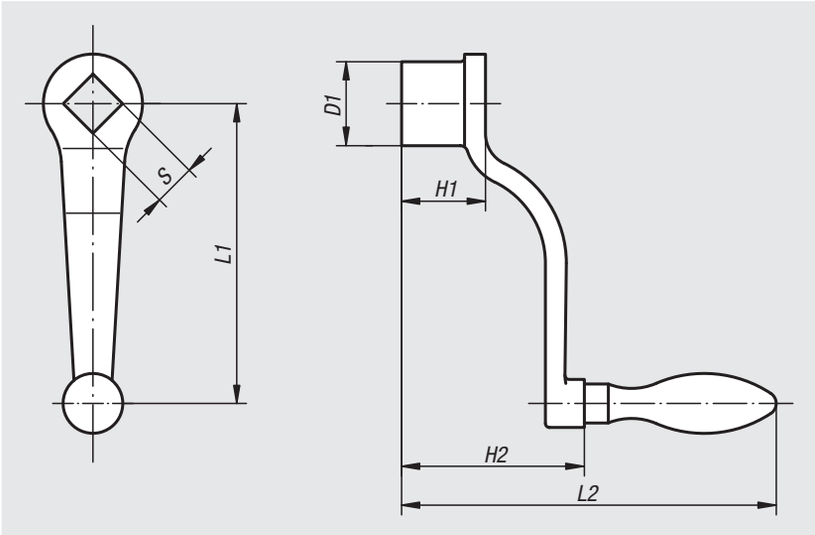

Material:
Crank arm malleable or ductile iron.

Version:
Blasted.

Sample order:
nlm 06480-212X14

Note:
Form D: with revolving handle
Form F: with fixed handle

Order No.	Form	L1	L2	S	D1	H1	H2	Grip Ø
06480-206X10	D	63	92	10 +0,2	20	20	40	16
06480-208X10	D	80	109	10 +0,2	24	24	44	20
06480-208X12	D	80	109	12 +0,2	24	24	44	20
06480-210X12	D	100	120	12 +0,2	28	28	55	20
06480-210X14	D	100	120	14 +0,3	28	28	55	20
06480-212X14	D	125	141	14 +0,3	34	34	58	25
06480-212X17	D	125	141	17 +0,3	34	34	58	25
06480-216X17	D	160	153	17 +0,3	37	38	70	25
06480-216X19	D	160	153	19 +0,3	37	38	70	25
06480-220X19	D	200	189	19 +0,3	40	44	84	32
06480-220X22	D	200	189	22 +0,3	40	44	84	32
06480-106X10	F	63	92	10 +0,2	20	20	40	16
06480-108X10	F	80	109	10 +0,2	24	24	44	20
06480-108X12	F	80	109	12 +0,2	24	24	44	20
06480-110X12	F	100	120	12 +0,2	28	28	55	20
06480-110X14	F	100	120	14 +0,3	28	28	55	20
06480-112X14	F	125	141	14 +0,3	34	34	58	25
06480-112X17	F	125	141	17 +0,3	34	34	58	25
06480-116X17	F	160	153	17 +0,3	37	38	70	25
06480-116X19	F	160	153	19 +0,3	37	38	70	25
06480-120X19	F	200	189	19 +0,3	40	44	84	32
06480-120X22	F	200	189	22 +0,3	40	44	84	32

Crank handles straight

similar to DIN 469

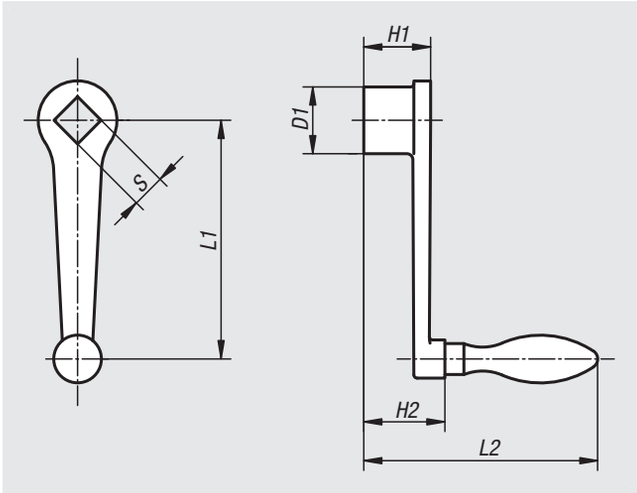

Material:
Crank arm malleable or ductile iron.

Version:
Blasted.

Sample order:
nlm 06490-120X22

Note:
Form D: with revolving handle
Form F: with fixed handle

Order No.	Form	L1	L2	S	D1	H1	H2	Grip Ø
06490-206X10	D	63	80	10 +0,2	20	20	28	16
06490-208X10	D	80	98	10 +0,2	24	24	33	20
06490-208X12	D	80	98	12 +0,2	24	24	33	20
06490-210X12	D	100	102	12 +0,2	28	28	37	20
06490-210X14	D	100	102	14 +0,3	28	28	37	20
06490-212X14	D	125	120	14 +0,3	34	34	40	25
06490-212X17	D	125	120	17 +0,3	34	34	40	25
06490-216X17	D	160	131	17 +0,3	37	38	48	25
06490-216X19	D	160	131	19 +0,3	37	38	48	25
06490-220X19	D	200	158	19 +0,3	40	44	53	32
06490-220X22	D	200	158	22 +0,3	40	44	53	32
06490-106X10	F	63	80	10 +0,2	20	20	28	16
06490-108X10	F	80	98	10 +0,2	24	24	33	20
06490-108X12	F	80	98	12 +0,2	24	24	33	20
06490-110X12	F	100	102	12 +0,2	28	28	37	20
06490-110X14	F	100	102	14 +0,3	28	28	37	20
06490-112X14	F	125	120	14 +0,3	34	34	40	25
06490-112X17	F	125	120	17 +0,3	34	34	40	25
06490-116X17	F	160	131	17 +0,3	37	38	48	25
06490-116X19	F	160	131	19 +0,3	37	38	48	25
06490-120X19	F	200	158	19 +0,3	40	44	53	32
06490-120X22	F	200	158	22 +0,3	40	44	53	32

Crank handles

aluminium

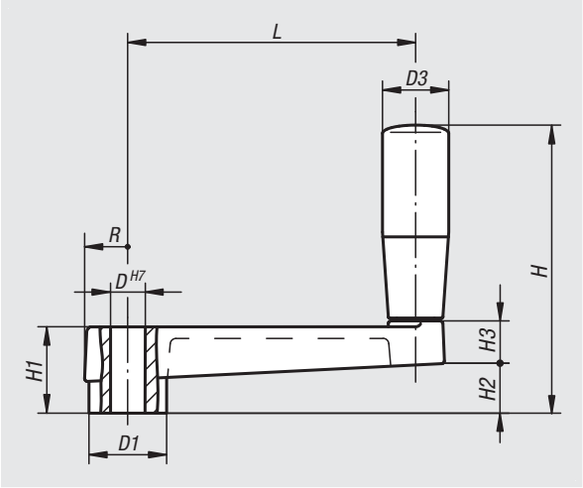

Material:
Aluminium.
Grip thermoplastic.

Version:
Arm plastic-coated, black.
Grip black.

Sample order:
nlm 06492-100

Order No.	D	D1	D3	H	H1	H2	H3	L	R
06492-100	10	23	21	81	24	14	14	80	13
06492-120	12	27	23	100	28	17	15	100	15
06492-140	14	32	26	123	34	22	18	125	17,5

Crank handles

with fold-away grip

Material:
Black grey thermoplastic.

Version:
Steel parts black oxidised.

Sample order:
nlm 06500-1108

Note:
The hub cap is supplied loose.
The crank handle can be secured to a shaft using a transverse pin or by parallel key connection together with a DIN 6912 socket head screw and a DIN 7349 washer.

DIN 6885-1

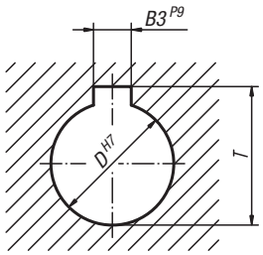

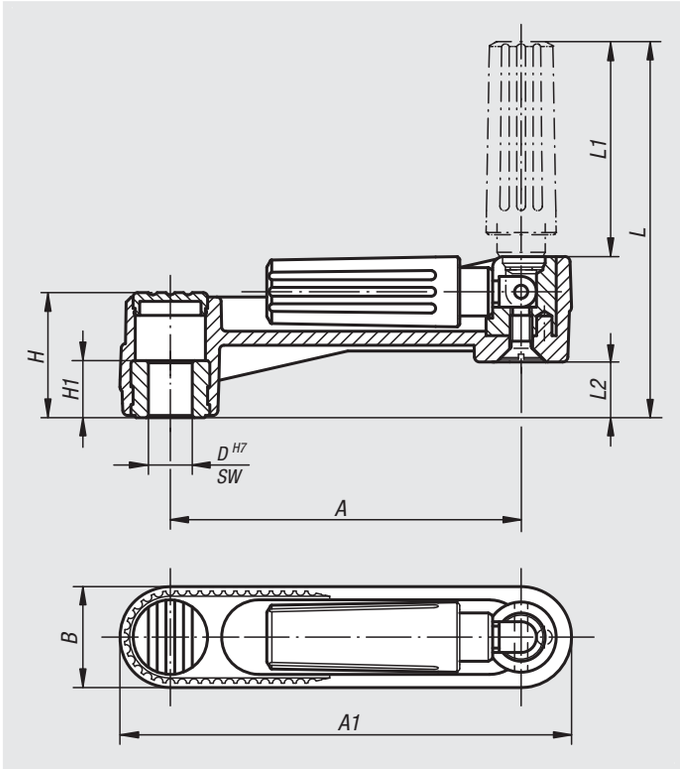

Order No.	Version	Size	A	A1	B	D	H	H1	L	L1	L2
06500-1108	without slot	1	80	104	24	8	29	13	85,5	49	13
06500-1110	without slot	1	80	104	24	10	29	13	85,5	49	13
06500-1210	without slot	2	100	129	29	10	36	13	105	59,5	16
06500-1212	without slot	2	100	129	29	12	36	13	105	59,5	16
06500-1312	without slot	3	125	161	36	12	44	18,5	140	83,5	19,5
06500-1314	without slot	3	125	161	36	14	44	18,5	140	83,5	19,5

Order No.	Version	Size	A	A1	B	D	H	H1	L	L1	L2	B3	T
06500-110802	with slot	1	80	104	24	8	29	13	85,5	49	13	2	9
06500-111003	with slot	1	80	104	24	10	29	13	85,5	49	13	3	11,4
06500-121003	with slot	2	100	129	29	10	36	13	105	59,5	16	3	11,4
06500-121204	with slot	2	100	129	29	12	36	13	105	59,5	16	4	13,8
06500-131204	with slot	3	125	161	36	12	44	18,5	140	83,5	19,5	4	13,8
06500-131405	with slot	3	125	161	36	14	44	18,5	140	83,5	19,5	5	16,3

Order No.	Version	Size	A	A1	B	SW	H	H1	L	L1	L2
06500-2108	square socket	1	80	104	24	8	29	13	85,5	49	13
06500-2110	square socket	1	80	104	24	10	29	13	85,5	49	13
06500-2210	square socket	2	100	129	29	10	36	13	105	59,5	16
06500-2212	square socket	2	100	129	29	12	36	13	105	59,5	16
06500-2312	square socket	3	125	161	36	12	44	18,5	140	83,5	19,5
06500-2314	square socket	3	125	161	36	14	44	18,5	140	83,5	19,5

Crank handles

with revolving grip

Material:
Black grey thermoplastic.

Version:
Steel parts black oxidised.

Sample order:
nlm 06500-3108

Note:
The hub cap and the revolving grip are supplied loose. To assemble the handle simply screw the grip into the existing hole. Novo·Grip crank handles can be secured to a shaft by using a transverse pin or by parallel key connection together with a DIN 6912 socket head screw and a DIN 7349 washer.

DIN 6885-1

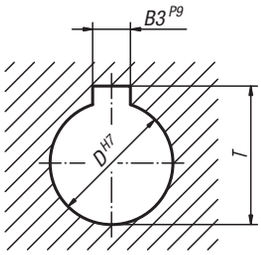

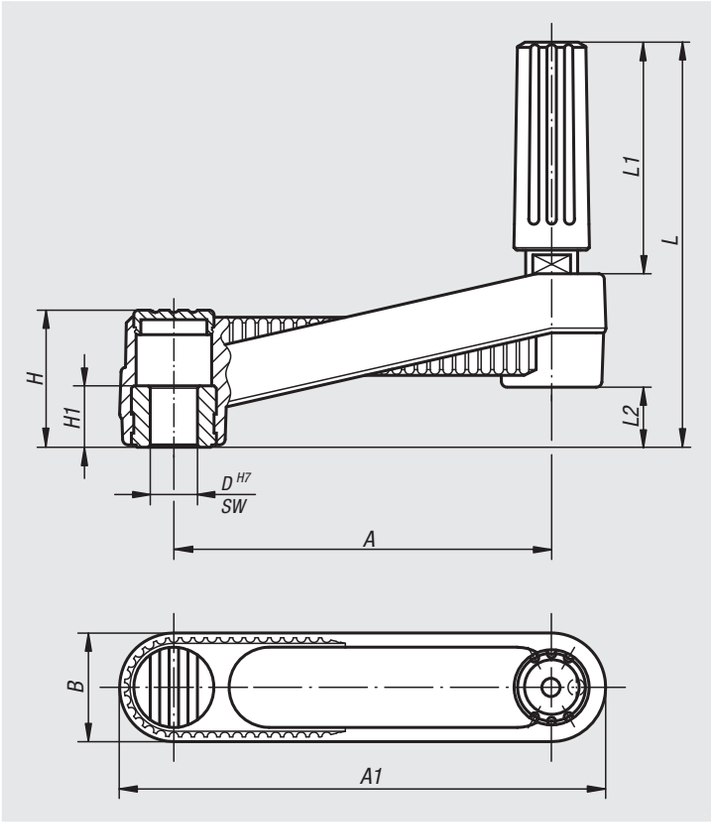

Order No.	Version	Size	A	A1	B	D	H	H1	L	L1	L2
06500-3108	without slot	1	80	104	24	8	29	13	85,5	49	13
06500-3110	without slot	1	80	104	24	10	29	13	85,5	49	13
06500-3210	without slot	2	100	129	29	10	36	13	105	59,5	16
06500-3212	without slot	2	100	129	29	12	36	13	105	59,5	16
06500-3312	without slot	3	125	161	36	12	44	18,5	140	83,5	19,5
06500-3314	without slot	3	125	161	36	14	44	18,5	140	83,5	19,5

Order No.	Version	Size	A	A1	B	D	H	H1	L	L1	L2	B3	T
06500-310802	with slot	1	80	104	24	8	29	13	85,5	49	13	2	9
06500-311003	with slot	1	80	104	24	10	29	13	85,5	49	13	3	11,4
06500-321003	with slot	2	100	129	29	10	36	13	105	59,5	16	3	11,4
06500-321204	with slot	2	100	129	29	12	36	13	105	59,5	16	4	13,8
06500-331204	with slot	3	125	161	36	12	44	18,5	140	83,5	19,5	4	13,8
06500-331405	with slot	3	125	161	36	14	44	18,5	140	83,5	19,5	5	16,3

Order No.	Version	Size	A	A1	B	SW	H	H1	L	L1	L2
06500-4108	square socket	1	80	104	24	8	29	13	85,5	49	13
06500-4110	square socket	1	80	104	24	10	29	13	85,5	49	13
06500-4210	square socket	2	100	129	29	10	36	13	105	59,5	16
06500-4212	square socket	2	100	129	29	12	36	13	105	59,5	16
06500-4312	square socket	3	125	161	36	12	44	18,5	140	83,5	19,5
06500-4314	square socket	3	125	161	36	14	44	18,5	140	83,5	19,5

Crank handles

with safety grip

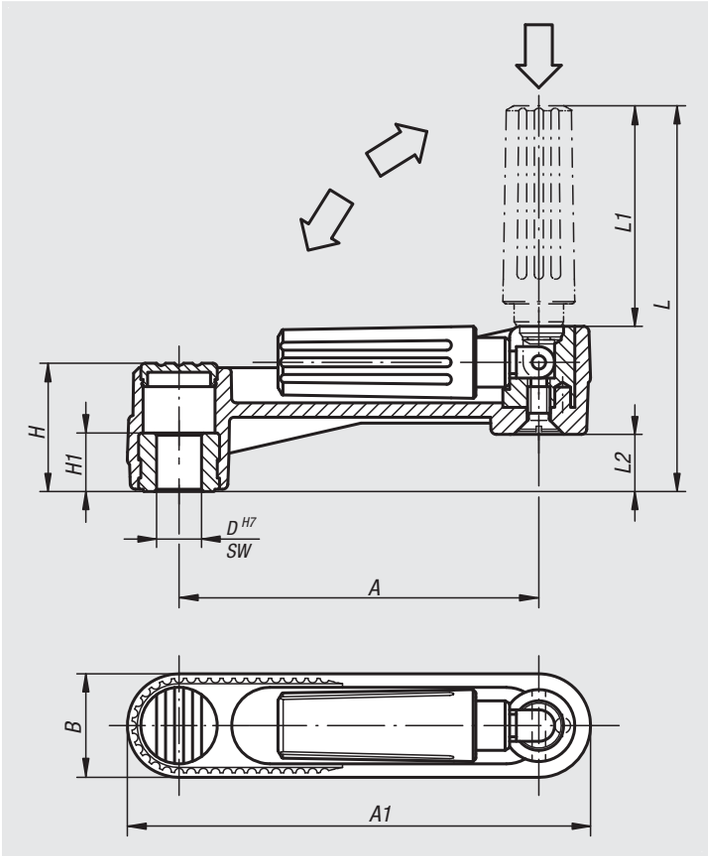

Material:
Arm and grip black grey thermoplastic.

Version:
Steel parts black oxidised.

Sample order:
nlm 06502-1108

Note:
The hub cover is supplied loose.
The crank handles can be secured to the shaft by cross-pinning or by parallel key together with a DIN 6912 socket head screw and DIN 7349 washer.
Two actions must be made to bring the safety grip into an operating position:
- Swing the grip out until it stops (90°).
- Push the grip in until it locks.

The pushed-in position is the most comfortable for cranking. The grip swings back automatically after releasing.

DIN 6885-1

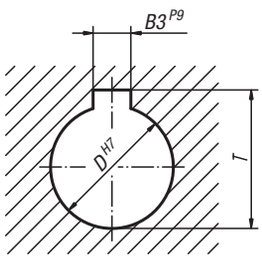

Order No.	Version	Size	A	A1	B	D	H	H1	L	L1	L2
06502-1108	without slot	1	80	104	24	8	29	13	84	47,5	13
06502-1110	without slot	1	80	104	24	10	29	13	84	47,5	13
06502-1210	without slot	2	100	129	29	10	36	13	104	58,5	16
06502-1212	without slot	2	100	129	29	12	36	13	104	58,5	16
06502-1312	without slot	3	125	161	36	12	44	18,5	138,5	82	19,5
06502-1314	without slot	3	125	161	36	14	44	18,5	138,5	82	19,5

Order No.	Version	Size	A	A1	B	D	H	H1	L	L1	L2	B3	T
06502-110802	with slot	1	80	104	24	8	29	13	84	47,5	13	2	9
06502-111003	with slot	1	80	104	24	10	29	13	84	47,5	13	3	11,4
06502-121003	with slot	2	100	129	29	10	36	13	104	58,5	16	3	11,4
06502-121204	with slot	2	100	129	29	12	36	13	104	58,5	16	4	13,8
06502-131204	with slot	3	125	161	36	12	44	18,5	138,5	82	19,5	4	13,8
06502-131405	with slot	3	125	161	36	14	44	18,5	138,5	82	19,5	5	16,3

Order No.	Version	Size	A	A1	B	SW	H	H1	L	L1	L2
06502-2108	square socket	1	80	104	24	8	29	13	84	47,5	13
06502-2110	square socket	1	80	104	24	10	29	13	84	47,5	13
06502-2210	square socket	2	100	129	29	10	36	13	104	58,5	16
06502-2212	square socket	2	100	129	29	12	36	13	104	58,5	16
06502-2312	square socket	3	125	161	36	12	44	18,5	138,5	82	19,5
06502-2314	square socket	3	125	161	36	14	44	18,5	138,5	82	19,5

Crank handles aluminium

cylindrical revolving grip

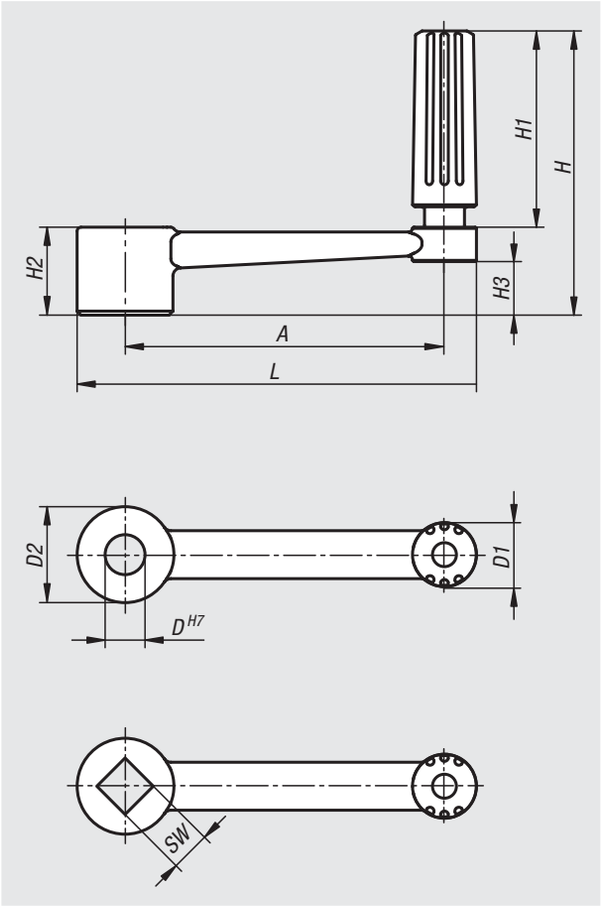

Material:
Crank AlSi9Cu3 3.2163.
Revolving grip thermoplastic PA6 and steel 1.0718.

Version:
Crank plastic powder coated, black.
Thermoplastic black.
Steel parts black oxidised.

Sample order:
nlm 06503-3110

Note:
Similar to DIN 469.

Order No.	Version	D	D1	D2	H	H1	H2	H3	A	L
06503-3110	reamed hole	10	16	24	71,1	49,1	22	13,4	80	100
06503-3212	reamed hole	12	20	28	87,4	61,4	26	16	100	124
06503-3314	reamed hole	14	26	30	111	83	28	15,8	125	153
06503-3417	reamed hole	17	26	34	115	83	32	19,6	160	190

Order No.	Version	SW (square)	D1	D2	H	H1	H2	H3	A	L
06503-4110	square socket	10	16	24	71,1	49,1	22	13,4	80	100
06503-4212	square socket	12	20	28	87,4	61,4	26	16	100	124
06503-4314	square socket	14	26	30	111	83	28	15,8	125	153
06503-4417	square socket	17	26	34	115	83	32	19,6	160	190

Crank handles aluminium

with fold-away cylinder grip

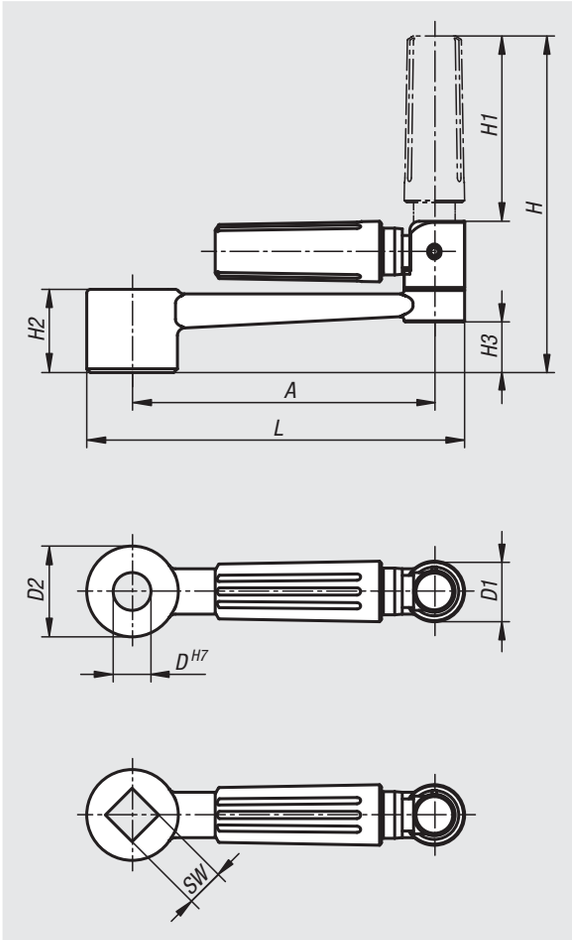

Material:
Crank AlSi9Cu3 3.2163.
Cylinder grip thermoplastic PA6 and steel.

Version:
Crank plastic powder coated, black.
Thermoplastic black.
Steel parts black oxidised.

Sample order:
nlm 06503-1110

Note:
Similar to DIN 469.

Order No.	Version	D	D1	D2	H	H1	H2	H3	A	L
06503-1110	reamed hole	10	16	24	89	49	22	13,4	80	100
06503-1212	reamed hole	12	20	28	107,9	59,4	26	16	100	124
06503-1314	reamed hole	14	26	30	140,5	83,5	28	15,8	125	153
06503-1417	reamed hole	17	26	34	144,5	83,5	32	19,6	160	190

Order No.	Version	SW (square)	D1	D2	H	H1	H2	H3	A	L
06503-2110	square socket	10	16	24	89	49	22	13,4	80	100
06503-2212	square socket	12	20	28	107,9	59,4	26	16	100	124
06503-2314	square socket	14	26	30	140,5	83,5	28	15,8	125	153
06503-2417	square socket	17	26	34	144,5	83,5	32	19,6	160	190

Crank handles aluminium

with safety cylinder grip

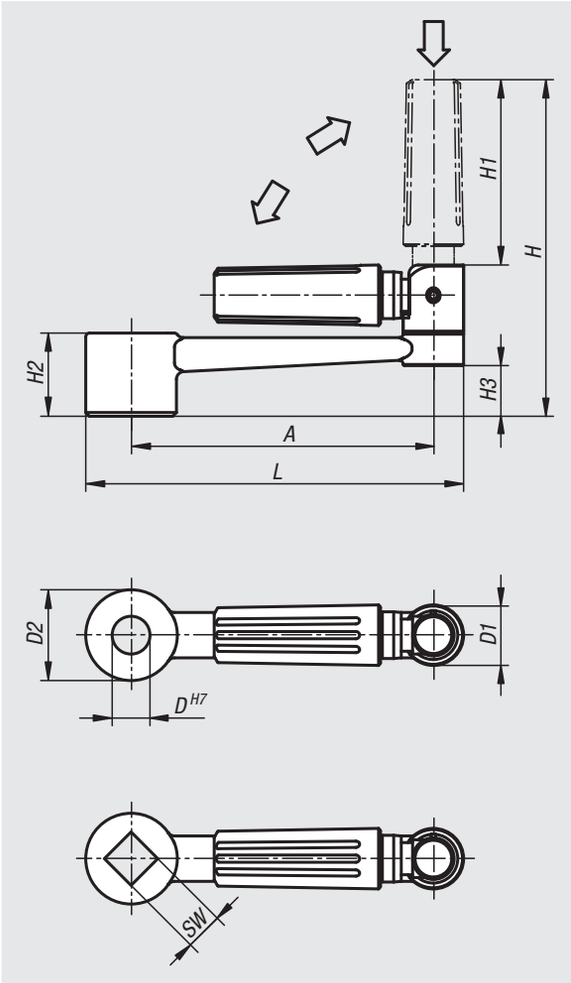

Material:
Crank AlSi9Cu3 3.2163.
Safety cylinder grip thermoplastic PA6 and steel.

Version:
Crank plastic powder coated, black.
Thermoplastic black.
Steel parts black oxidised.

Sample order:
nlm 06504-1110

Note:
Similar to DIN 469.

Order No.	Version	D	D1	D2	H	H1	H2	H3	A	L
06504-1110	reamed hole	10	16	24	87,5	47,5	22	13,4	80	100
06504-1212	reamed hole	12	20	28	106,9	58,4	26	16	100	124
06504-1314	reamed hole	14	26	30	139,1	82,1	28	15,8	125	153
06504-1417	reamed hole	17	26	34	143,1	82,1	32	19,6	160	190

Order No.	Version	SW (square)	D1	D2	H	H1	H2	H3	A	L
06504-2110	square socket	10	16	24	87,5	47,5	22	13,4	80	100
06504-2212	square socket	12	20	28	106,9	58,4	26	16	100	124
06504-2314	square socket	14	26	30	139,1	82,1	28	15,8	125	153
06504-2417	square socket	17	26	34	143,1	82,1	32	19,6	160	190

Crank handles stainless steel

cylindrical revolving grip

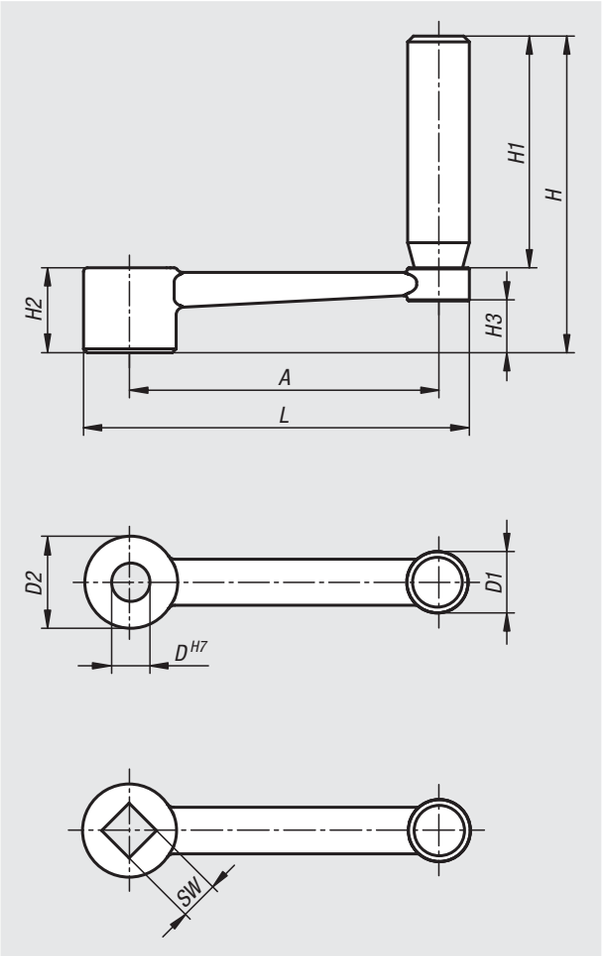

Material:
Crank stainless steel 1.4308.
Axle pin stainless steel 1.4305.
Revolving grip stainless steel 1.4305.
Retaining ring stainless-steel 1.4310.

Version:
Bright.

Sample order:
nlm 06505-3110

Note:
Similar to DIN 469.

Order No.	Version	D	D1	D2	H	H1	H2	H3	A	L
06505-3110	reamed hole	10	16	24	82	60	22	13,4	80	100
06505-3212	reamed hole	12	20	28	98	72	26	16	100	124
06505-3314	reamed hole	14	26	30	118	90	28	15,8	125	153
06505-3417	reamed hole	17	26	34	122	90	32	19,6	160	190

Order No.	Version	SW (square)	D1	D2	H	H1	H2	H3	A	L
06505-4110	square socket	10	16	24	82	60	22	13,4	80	100
06505-4212	square socket	12	20	28	98	72	26	16	100	124
06505-4314	square socket	14	26	30	118	90	28	15,8	125	153
06505-4417	square socket	17	26	34	122	90	32	19,6	160	190

06510

Crank handles balanced

Material:
Steel.

Version:
galvanized.

Sample order:
nlm 06510-108

Note:
Fixed handle DIN 39.

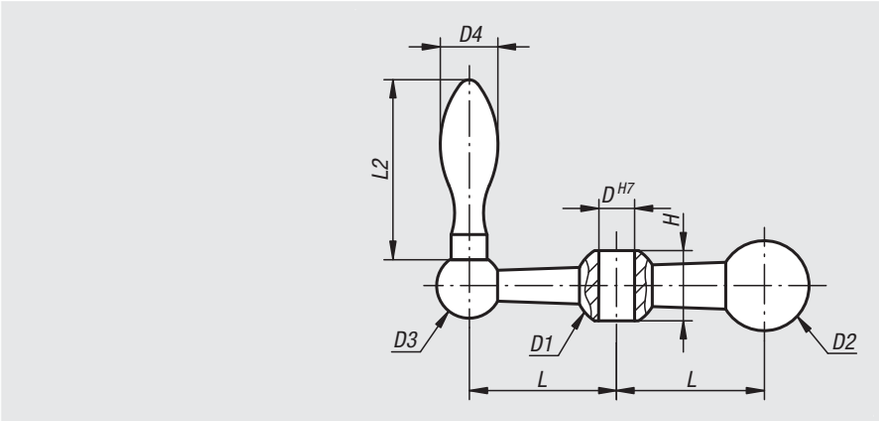

Order No.	D	D1	D2	D3	D4	H	L	L2
06510-107	7	16	18	13	10	13	25	32
06510-108	8	20	22	16	14	17	34	46
06510-110	10	23	25	18	16	19,5	41	50
06510-112	12	26	28	20	18	21,5	50	56

06550

Bar knobs

Material:
Malleable cast iron

Version:
Sand-blasted

Sample order:
nlm 06550-12

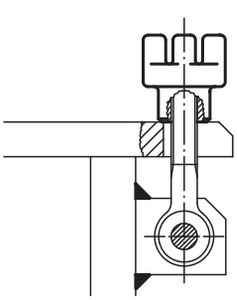

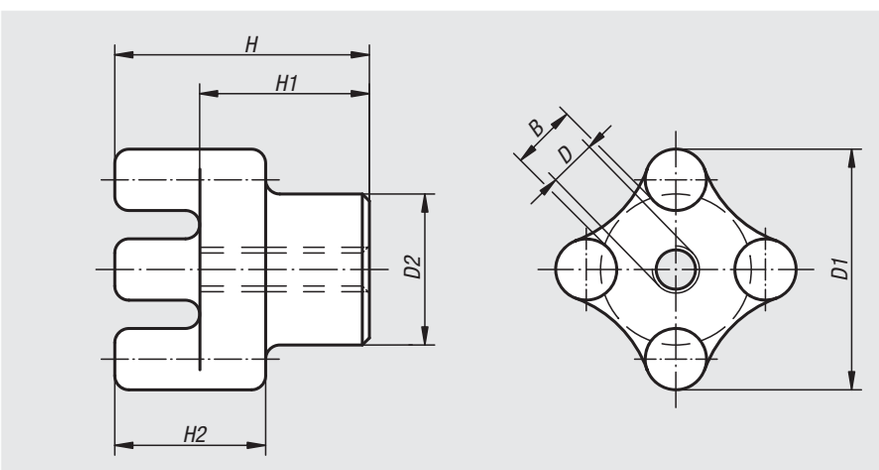

Order No.	D	D1	D2	H	H1	H2	B
06550-10	M10	51	32	54	36	32	12
06550-12	M12	51	32	54	36	32	12
06550-14	M14	51	32	54	36	32	12
06550-16	M16	51	32	54	36	32	12
06550-20	M20	64	38	60	40	35	18
06550-24	M24	90	57	70	40	45	30

Notes

Clamping levers with plastic handle

internal thread

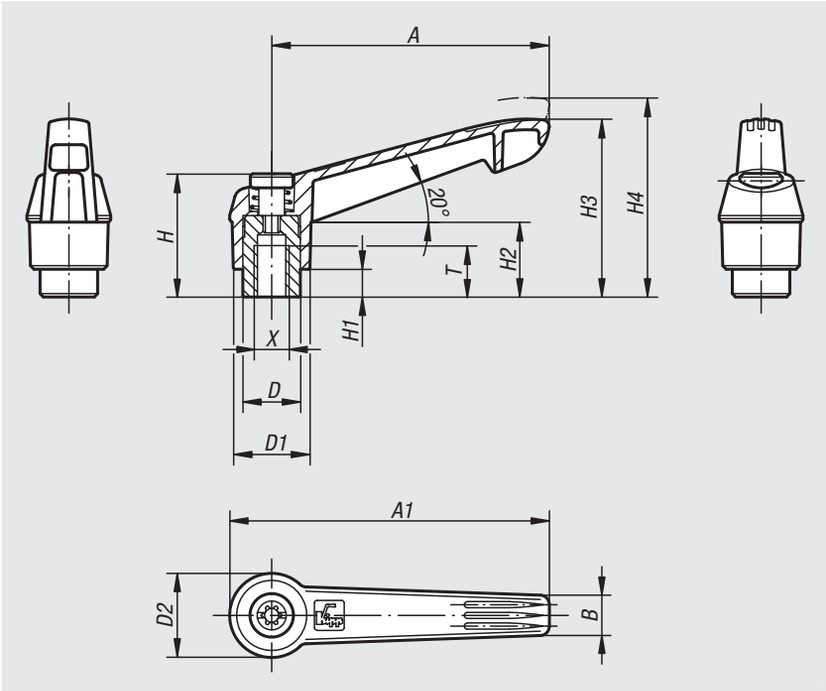

Material:
Handle fibreglass reinforced plastic with die-cast zinc toothed ring.
Steel parts grade 5.8.

Version:
Steel parts black oxidised.

Sample order:
nlm 06600-10486 (lever colour signal green)

Note:
Δ Add the desired lever colour here.

On request:
Other internal threads and special versions.
Dimension "H1" available in other lengths at extra charge.

lift to disengage

black grey Δ = 1	orange Δ = 2	signal green Δ = 86	traffic red Δ = 84	rape yellow Δ = 16	traffic blue Δ = 87
RAL 7021	RAL 2004	RAL 6032	RAL 3020	RAL 1021	RAL 5017

Order No.	Size	X	T	D	D1	D2	H	H1	H2	H3	H4	A	A1	B	No. of teeth
06600-104Δ	1	M4	9	10	13	14,5	24,5	4	15	30	33,5	40	47	7,5	16
06600-105Δ	1	M5	9	10	13	14,5	24,5	4	15	30	33,5	40	47	7,5	16
06600-106Δ	1	M6	9	10	13	14,5	24,5	4	15	30	33,5	40	47	7,5	16
06600-206Δ	2	M6	12	13,5	18	19,5	28,5	6,5	17,5	41,5	45,5	65	75	9,5	20
06600-208Δ	2	M8	12	13,5	18	19,5	28,5	6,5	17,5	41,5	45,5	65	75	9,5	20
06600-308Δ	3	M8	14	16	21,5	23	37	10	24	53,5	58	80	91,5	11	22
06600-310Δ	3	M10	14	16	21,5	23	37	10	24	53,5	58	80	91,5	11	22
06600-410Δ	4	M10	17	19	25,5	27,5	43	10	26	61	66	95	109	13	24
06600-412Δ	4	M12	17	19	25,5	27,5	43	10	26	61	66	95	109	13	24
06600-512Δ	5	M12	23	23	30	32,5	49	12	33	72	77	110	126	15,5	26
06600-516Δ	5	M16	23	23	30	32,5	49	12	33	72	77	110	126	15,5	26

Clamping levers with push button

internal thread

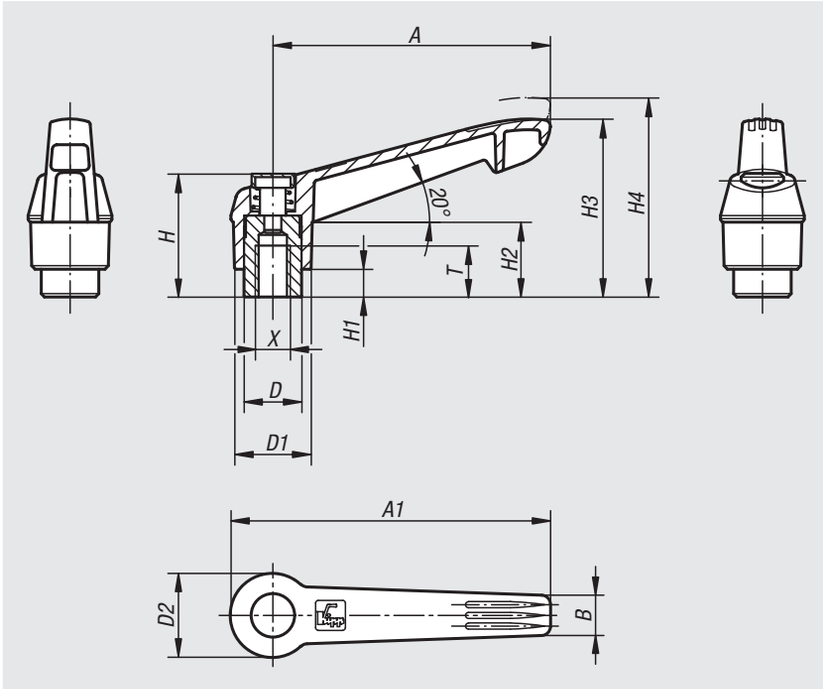

Material:
Handle fibreglass reinforced plastic, toothed ring die-cast zinc.
Steel parts grade 5.8.
Push button plastic (POM).

Version:
Steel parts black oxidised.

Sample order:
nlm 06600-71104
(clamping lever black grey, push button traffic red)

Note:
Δ Enter the desired lever colour here.
The standard colours are:
Black grey clamping lever, traffic red push button.
Orange clamping lever, black grey push button.
Traffic red clamping lever, black grey push button.

On request:
Other internal threads and special versions.
Dimension "H1" available in other lengths at extra charge.

Order No.	Size	X	T	D	D1	D2	H	H1	H2	H3	H4	A	A1	B	No. of teeth
06600-7Δ104	1	M4	9	10	13	14,5	25,5	4	15	30	33,5	40	47	7,5	16
06600-7Δ105	1	M5	9	10	13	14,5	25,5	4	15	30	33,5	40	47	7,5	16
06600-7Δ106	1	M6	9	10	13	14,5	25,5	4	15	30	33,5	40	47	7,5	16
06600-7Δ206	2	M6	12	13,5	18	19,5	29,5	6,5	17,5	41,5	45,5	65	75	9,5	20
06600-7Δ208	2	M8	12	13,5	18	19,5	29,5	6,5	17,5	41,5	45,5	65	75	9,5	20
06600-7Δ308	3	M8	14	16	21,5	23	38,5	10	24	53,5	58	80	91,5	11	22
06600-7Δ310	3	M10	14	16	21,5	23	38,5	10	24	53,5	58	80	91,5	11	22
06600-7Δ410	4	M10	17	19	25,5	27,5	44,6	10	26	61	66	95	109	13	24
06600-7Δ412	4	M12	17	19	25,5	27,5	44,6	10	26	61	66	95	109	13	24
06600-7Δ512	5	M12	23	23	30	32,5	50,6	12	33	72	77	110	126	15,5	26
06600-7Δ516	5	M16	23	23	30	32,5	50,6	12	33	72	77	110	126	15,5	26

Clamping levers antistatic

internal thread, plastic grip

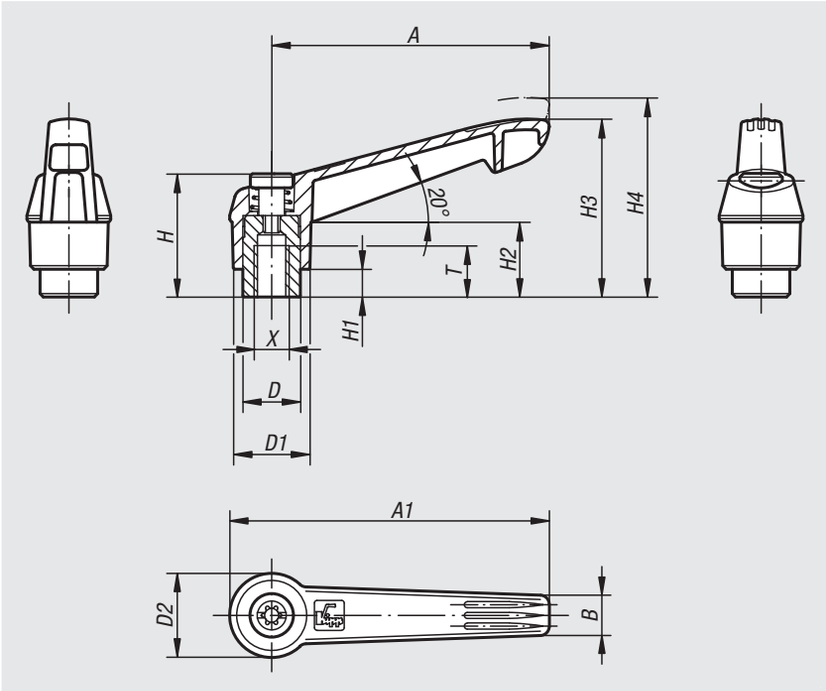

Material:
Handles reinforced plastic, toothed ring die-cast zinc.
Steel parts grade 5.8.

Version:
Steel parts black oxidised, handles graphite black.

Sample order:
nlm 06600-1120624

Application:
Sensitive electrical or electronic equipment, components and devices (ESD sensitive elements) may be damaged or destroyed by electrostatic discharges (ESD) in the immediate vicinity.
Electrostatic discharges can come from people or through handling ESD sensitive components (e.g. during production, assembly, transport, storage etc).
Electrically conductive products which conform to DIN EN 61340-5-1 are essential within electronic environments to prevent an electrostatic discharge.
These products can be used for ESD applications or in ESD protection areas (EPA) in accordance with DIN EN 61340-5-1.
The yellow ESD logo is printed on the side of the product to clearly identify it.

Safety:
These ESD products can also be used for devices, components and protection systems in areas with high risk of explosion.
Use of these ESD products prevents the occurrence of electrostatic spark discharges, eliminating the potential ignition of gases and dusts which could lead to explosions in enclosed spaces.
Manufacturers and operators must use and conform to ATEX directives for the protection of persons working in areas with high risk of explosion.
These ESD products are certified by TÜV-Süd in relation to their electrical discharge capability.

Target groups:
Device manufacturers required to conform to ATEX product directive 2014/34/EU.
Operators required to conform to ATEX worker protection directive 1999/92/EC.

lift to disengage

Order No.	Main colour	Size	X	T	D	D1	D2	H	H1	H2	H3	H4	A	A1	B	No. of teeth
06600-1120624	graphite black RAL 9011	2	M6	12	13,5	18	19,5	28,5	6,5	17,5	41,5	45,5	65	75	9,5	20
06600-1120824	graphite black RAL 9011	2	M8	12	13,5	18	19,5	28,5	6,5	17,5	41,5	45,5	65	75	9,5	20

Clamping levers with plastic handle

internal thread, metal parts stainless steel

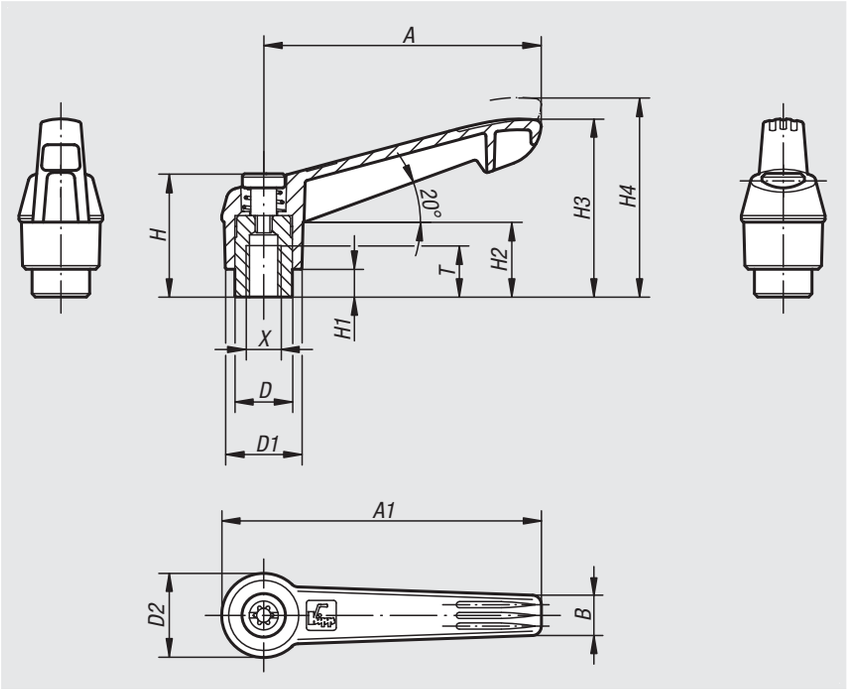

Material:
Handle fibreglass reinforced plastic with die-cast zinc toothed ring.
Steel parts stainless steel 1.4305.

Version:
Stainless steel bright.

Sample order:
nlm 06601-10486 (lever colour signal green)

Note:
Δ Add the desired lever colour here.

On request:
Other internal threads and special versions.
Dimension "H1" available in other lengths at extra charge.

lift to disengage

black grey Δ = 1	orange Δ = 2	signal green Δ = 86	traffic red Δ = 84	rape yellow Δ = 16	traffic blue Δ = 87
RAL 7021	RAL 2004	RAL 6032	RAL 3020	RAL 1021	RAL 5017

Order No.	Size	X	T	D	D1	D2	H	H1	H2	H3	H4	A	A1	B	No. of teeth
06601-104Δ	1	M4	9	10	13	14,5	24,5	4	15	30	33,5	40	47	7,5	16
06601-105Δ	1	M5	9	10	13	14,5	24,5	4	15	30	33,5	40	47	7,5	16
06601-106Δ	1	M6	9	10	13	14,5	24,5	4	15	30	33,5	40	47	7,5	16
06601-206Δ	2	M6	12	13,5	18	19,5	28,5	6,5	17,5	41,5	45,5	65	75	9,5	20
06601-208Δ	2	M8	12	13,5	18	19,5	28,5	6,5	17,5	41,5	45,5	65	75	9,5	20
06601-308Δ	3	M8	14	16	21,5	23	37	10	24	53,5	58	80	91,5	11	22
06601-310Δ	3	M10	14	16	21,5	23	37	10	24	53,5	58	80	91,5	11	22
06601-410Δ	4	M10	17	19	25,5	27,5	43	10	26	61	66	95	109	13	24
06601-412Δ	4	M12	17	19	25,5	27,5	43	10	26	61	66	95	109	13	24
06601-512Δ	5	M12	23	23	30	32,5	49	12	33	72	77	110	126	15,5	26
06601-516Δ	5	M16	23	23	30	32,5	49	12	33	72	77	110	126	15,5	26

Clamping levers with push button

internal thread, metal parts stainless steel

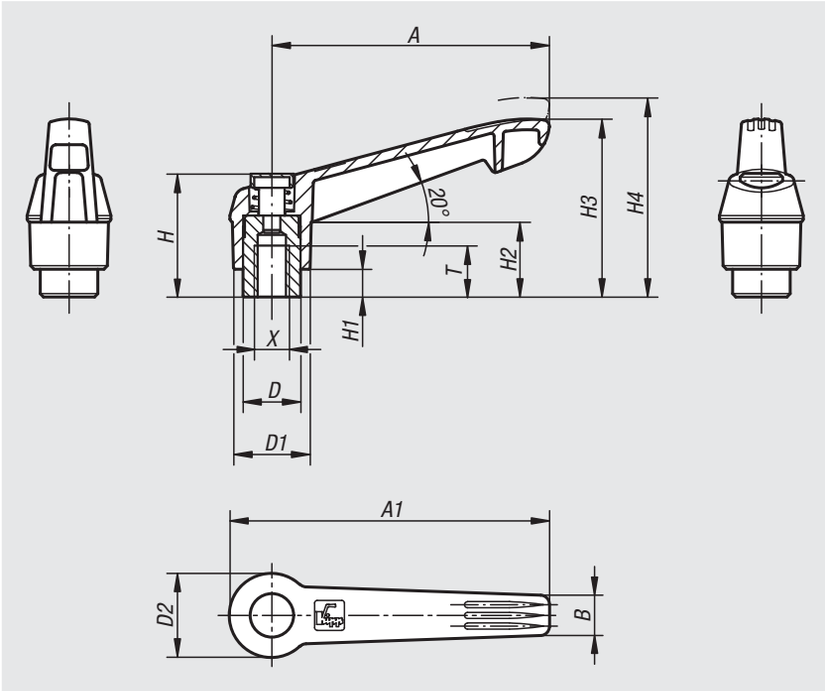

Material:
Handle fibreglass reinforced plastic, toothed ring die-cast zinc.
Metal parts stainless steel 1.4305.
Push button plastic (POM).

Version:
Steel parts bright.

Sample order:
nlm 06601-71104
(clamping lever black grey, push button traffic red)

Note:
Δ Enter the desired lever colour here.
The standard colours are:
Black grey clamping lever, traffic red push button.
Orange clamping lever, black grey push button.
Traffic red clamping lever, black grey push button.

On request:
Other internal threads and special versions.
Dimension “H1” available in other lengths at extra charge.

Order No.	Size	X	T	D	D1	D2	H	H1	H2	H3	H4	A	A1	B	No. of teeth
06601-7Δ104	1	M4	9	10	13	14,5	25,5	4	15	30	33,5	40	47	7,5	16
06601-7Δ105	1	M5	9	10	13	14,5	25,5	4	15	30	33,5	40	47	7,5	16
06601-7Δ106	1	M6	9	10	13	14,5	25,5	4	15	30	33,5	40	47	7,5	16
06601-7Δ206	2	M6	12	13,5	18	19,5	29,5	6,5	17,5	41,5	45,5	65	75	9,5	20
06601-7Δ208	2	M8	12	13,5	18	19,5	29,5	6,5	17,5	41,5	45,5	65	75	9,5	20
06601-7Δ308	3	M8	14	16	21,5	23	38,5	10	24	53,5	58	80	91,5	11	22
06601-7Δ310	3	M10	14	16	21,5	23	38,5	10	24	53,5	58	80	91,5	11	22
06601-7Δ410	4	M10	17	19	25,5	27,5	44,6	10	26	61	66	95	109	13	24
06601-7Δ412	4	M12	17	19	25,5	27,5	44,6	10	26	61	66	95	109	13	24
06601-7Δ512	5	M12	23	23	30	32,5	50,6	12	33	72	77	110	126	15,5	26
06601-7Δ516	5	M16	23	23	30	32,5	50,6	12	33	72	77	110	126	15,5	26

Clamping levers with plastic handle

external thread

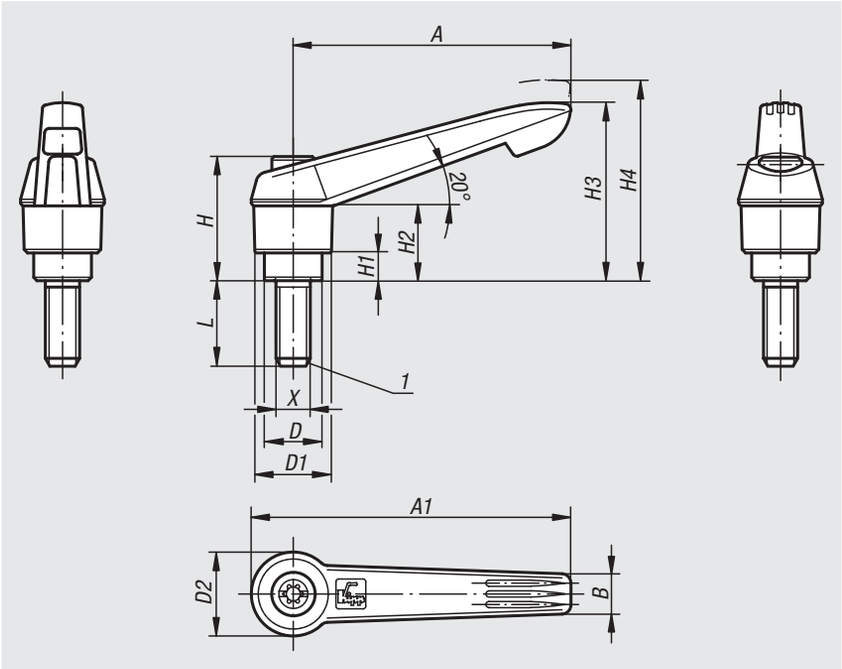

Material:
Handle fibreglass reinforced plastic with die-cast zinc toothed ring.
Steel parts grade 5.8.

Version:
Steel parts black oxidised.

Sample order:
nlm 06610-1051X40 (lever black grey; include length L)

Note:
Δ Add the desired lever colour here.
Where L ≥ 60 mm the thread length is 60 mm.

On request:
Other external threads, screw lengths and special versions.
Dimension "H1" available in other lengths at extra charge.

Drawing reference:
1) flat point DIN 78

lift to disengage

black grey Δ = 1

RAL 7021

orange Δ = 2

RAL 2004

signal green Δ = 86

RAL 6032

traffic red Δ = 84

RAL 3020

rape yellow Δ = 16

RAL 1021

traffic blue Δ = 87

RAL 5017

Order No.	Size	X	D	D1	D2	H	H1	H2	H3	H4	A	A1	B	No. of teeth	L
06610-105ΔX	1	M5	10	13	14,5	24,5	4	15	30	33,5	40	47	7,5	16	10/15/20/25/30/35/40/45/50
06610-106ΔX	1	M6	10	13	14,5	24,5	4	15	30	33,5	40	47	7,5	16	10/15/20/25/30/35/40/45/50
06610-206ΔX	2	M6	13,5	18	19,5	28,5	6,5	17,5	41,5	45,5	65	75	9,5	20	15/20/25/30/35/40/45/50/55/60
06610-208ΔX	2	M8	13,5	18	19,5	28,5	6,5	17,5	41,5	45,5	65	75	9,5	20	15/20/25/30/35/40/45/50/55/60
06610-210ΔX	2	M10	13,5	18	19,5	28,5	6,5	17,5	41,5	45,5	65	75	9,5	20	15/20/25/30/35/40/45/50/55/60
06610-308ΔX	3	M8	16	21,5	23	37	10	24	53,5	58	80	91,5	11	22	15/20/25/30/35/40/45/50/55/60
06610-310ΔX	3	M10	16	21,5	23	37	10	24	53,5	58	80	91,5	11	22	15/20/25/30/35/40/45/50/55/60
06610-410ΔX	4	M10	19	25,5	27,5	43	10	26	61	66	95	109	13	24	20/25/30/35/40/45/50/55/60/70/80/90
06610-412ΔX	4	M12	19	25,5	27,5	43	10	26	61	66	95	109	13	24	20/25/30/35/40/45/50/55/60/70/80/90
06610-512ΔX	5	M12	23	30	32,5	49	12	33	72	77	110	126	15,5	26	25/30/35/40/45/50/55/60/70/80/90
06610-516ΔX	5	M16	23	30	32,5	49	12	33	72	77	110	126	15,5	26	25/30/35/40/45/50/55/60/70/80/90

Clamping levers with push button

with external thread

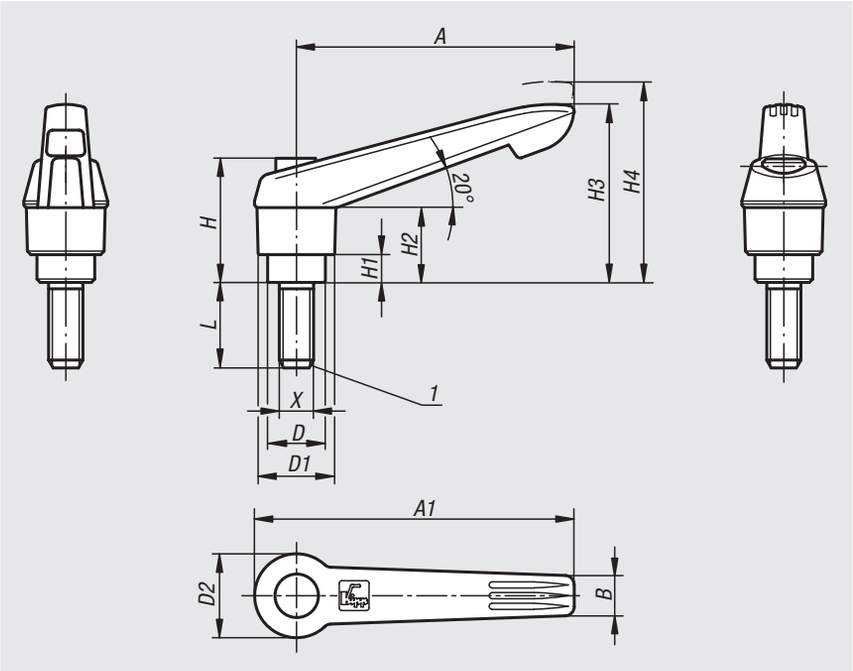

Material:
Handle fibreglass reinforced plastic, toothed ring die-cast zinc.
Steel parts grade 5.8.
Push button plastic (POM).

Version:
Steel parts black oxidised.

Sample order:
nlm 06610.71105X10
(clamping lever black grey, push button traffic red; include length L)

Note:
Δ Enter the desired lever colour here.
The standard colours are:
Black grey clamping lever, traffic red push button.
Orange clamping lever, black grey push button.
Traffic red clamping lever, black grey push button.
Where L ≥ 60 mm the thread length is 60 mm.

On request:
Other external threads, screw lengths and special versions.
Dimension "H1" available in other lengths at extra charge.

Drawing reference:
1) flat point DIN 78

Order No.	Size	X	D	D1	D2	H	H1	H2	H3	H4	A	A1	B	No. of teeth	L
06610-7Δ105X	1	M5	10	13	14,5	25,5	4	15	30	33,5	40	47	7,5	16	10/15/20/25/30/35/40/45/50
06610-7Δ106X	1	M6	10	13	14,5	25,5	4	15	30	33,5	40	47	7,5	16	10/15/20/25/30/35/40/45/50
06610-7Δ206X	2	M6	13,5	18	19,5	29,5	6,5	17,5	41,5	45,5	65	75	9,5	20	15/20/25/30/35/40/45/50/55/60
06610-7Δ208X	2	M8	13,5	18	19,5	29,5	6,5	17,5	41,5	45,5	65	75	9,5	20	15/20/25/30/35/40/45/50/55/60
06610-7Δ210X	2	M10	13,5	18	19,5	29,5	6,5	17,5	41,5	45,5	65	75	9,5	20	15/20/25/30/35/40/45/50/55/60
06610-7Δ308X	3	M8	16	21,5	23	38,5	10	24	53,5	58	80	91,5	11	22	15/20/25/30/35/40/45/50/55/60
06610-7Δ310X	3	M10	16	21,5	23	38,5	10	24	53,5	58	80	91,5	11	22	15/20/25/30/35/40/45/50/55/60
06610-7Δ410X	4	M10	19	25,5	27,5	44,6	10	26	61	66	95	109	13	24	20/25/30/35/40/45/50/55/60/70/80/90
06610-7Δ412X	4	M12	19	25,5	27,5	44,6	10	26	61	66	95	109	13	24	20/25/30/35/40/45/50/55/60/70/80/90
06610-7Δ512X	5	M12	23	30	32,5	50,6	12	33	72	77	110	126	15,5	26	25/30/35/40/45/50/55/60/70/80/90
06610-7Δ516X	5	M16	23	30	32,5	50,6	12	33	72	77	110	126	15,5	26	25/30/35/40/45/50/55/60/70/80/90

Clamping levers antistatic

external thread, plastic grip

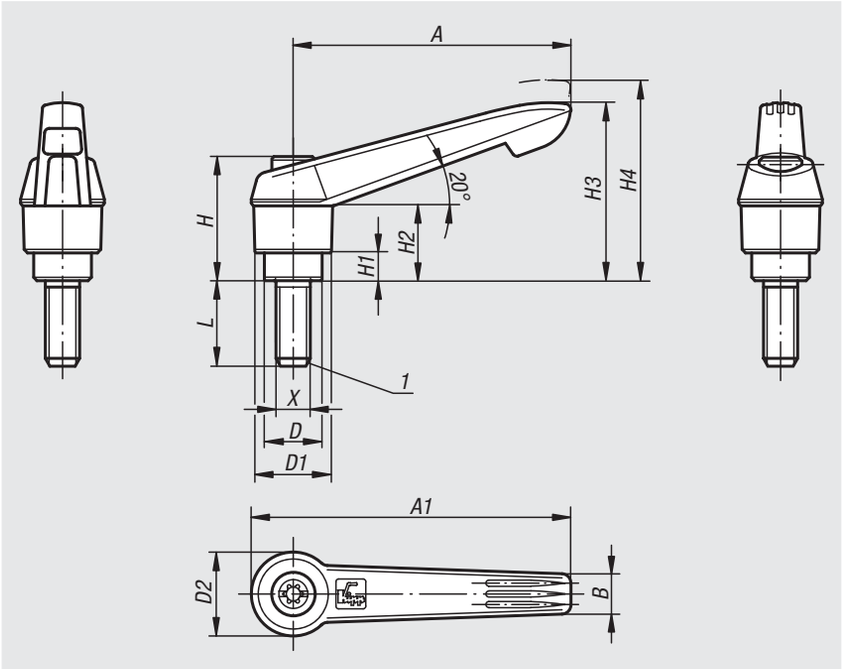

Material:
Handles reinforced plastic, toothed ring die-cast zinc.
Steel parts grade 5.8.

Version:
Steel parts black oxidised, handles graphite black.

Sample order:
nlm 06610-1120624X20

Application:
Sensitive electrical or electronic equipment, components and devices (ESD sensitive elements) may be damaged or destroyed by electrostatic discharges (ESD) in the immediate vicinity.
Electrostatic discharges can come from people or through handling ESD sensitive components (e.g. during production, assembly, transport, storage etc).
Electrically conductive products which conform to DIN EN 61340-5-1 are essential within electronic environments to prevent an electrostatic discharge.
These products can be used for ESD applications or in ESD protection areas (EPA) in accordance with DIN EN 61340-5-1.
The yellow ESD logo is printed on the side of the product to clearly identify it.

Safety:
These ESD products can also be used for devices, components and protection systems in areas with high risk of explosion.
Use of these ESD products prevents the occurrence of electrostatic spark discharges, eliminating the potential ignition of gases and dusts which could lead to explosions in enclosed spaces.
Manufacturers and operators must use and conform to ATEX directives for the protection of persons working in areas with high risk of explosion.
These ESD products are certified by TÜV-Süd in relation to their electrical discharge capability.

Target groups:
Device manufacturers required to conform to ATEX product directive 2014/34/EU.
Operators required to conform to ATEX worker protection directive 1999/92/EC.

Drawing reference:
1) flat point DIN 78

lift to disengage

Order No.	Main colour	Size	X	D	D1	D2	H	H1	H2	H3	H4	A	A1	B	No. of teeth	L
06610-1120624X20	graphite black RAL 9011	2	M6	13,5	18	19,5	28,5	6,5	17,5	41,5	45,5	65	75	9,5	20	20
06610-1120824X20	graphite black RAL 9011	2	M8	13,5	18	19,5	28,5	6,5	17,5	41,5	45,5	65	75	9,5	20	20
06610-1121024X20	graphite black RAL 9011	2	M10	13,5	18	19,5	28,5	6,5	17,5	41,5	45,5	65	75	9,5	20	20

Clamping levers with plastic handle

external thread, metal parts stainless steel

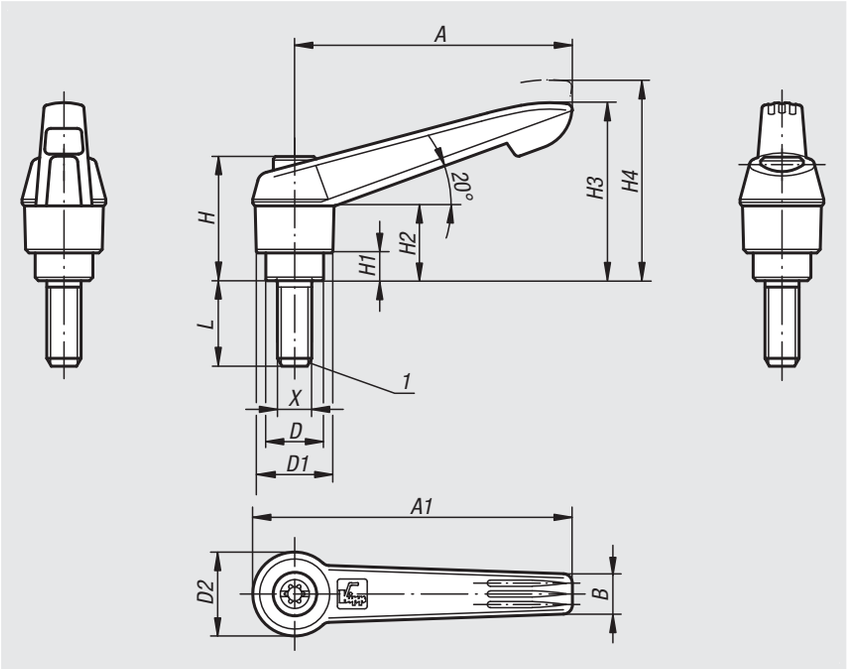

Material:
Handle fibreglass reinforced plastic with die-cast zinc toothed ring.
Steel parts stainless steel 1.4305.

Version:
Stainless steel bright.

Sample order:
nlm 06611-1051X20 (lever black grey; include length L)

Note:
Δ Add the desired lever colour here.
Where L ≥ 60 mm the thread length is 60 mm.

On request:
Other external threads, screw lengths and special versions.
Dimension "H1" available in other lengths at extra charge.

Drawing reference:
1) flat point DIN 78

lift to disengage

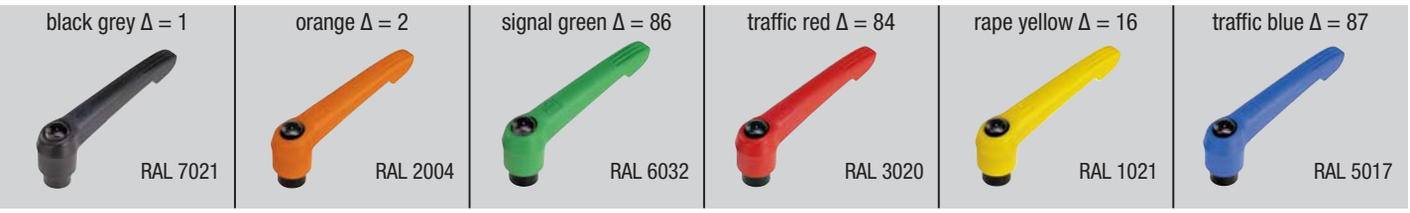

Order No.	Size	X	D	D1	D2	H	H1	H2	H3	H4	A	A1	B	No. of teeth	L
06611-105ΔX	1	M5	10	13	14,5	24,5	4	15	30	33,5	40	47	7,5	16	10/15/20/25
06611-106ΔX	1	M6	10	13	14,5	24,5	4	15	30	33,5	40	47	7,5	16	10/15/20/25/30/40/50
06611-206ΔX	2	M6	13,5	18	19,5	28,5	6,5	17,5	41,5	45,5	65	75	9,5	20	15/20/25/30/40/50/60
06611-208ΔX	2	M8	13,5	18	19,5	28,5	6,5	17,5	41,5	45,5	65	75	9,5	20	15/20/25/30/40/50/60
06611-210ΔX	2	M10	13,5	18	19,5	28,5	6,5	17,5	41,5	45,5	65	75	9,5	20	20/25/30/40/50/60
06611-308ΔX	3	M8	16	21,5	23	37	10	24	53,5	58	80	91,5	11	22	20/25/30/40/50/60
06611-310ΔX	3	M10	16	21,5	23	37	10	24	53,5	58	80	91,5	11	22	20/25/30/40/50/60
06611-412ΔX	4	M12	19	25,5	27,5	43	10	26	61	66	95	109	13	24	25/30/40/50/60
06611-516ΔX	5	M16	23	30	32,5	49	12	33	72	77	110	126	15,5	26	30/40/50/60

Clamping levers with push button

external thread, metal parts stainless steel

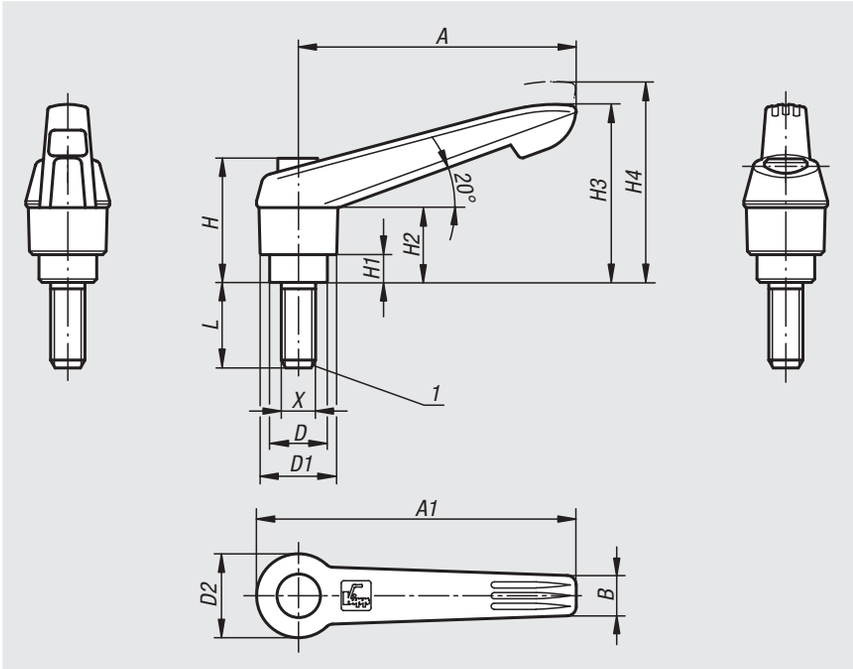

Material:
Handle fibreglass reinforced plastic, toothed ring die-cast zinc.
Metal parts stainless steel 1.4305.
Push button plastic (POM).

Version:
Steel parts bright.

Sample order:
nlm 06611.71105X10
(clamping lever black grey, push button traffic red; include length L)

Note:
Δ Enter the desired lever colour here.
The standard colours are:
Black grey clamping lever, traffic red push button.
Orange clamping lever, black grey push button.
Traffic red clamping lever, black grey push button.
Where L ≥ 60 mm the thread length is 60 mm.

On request:
Other external threads, screw lengths and special versions.
Dimension "H1" available in other lengths at extra charge.

Drawing reference:
1) flat point DIN 78

Order No.	Size	X	D	D1	D2	H	H1	H2	H3	H4	A	A1	B	No. of teeth	L
06611-7Δ105X	1	M5	10	13	14,5	25,5	4	15	30	33,5	40	47	7,5	16	10/15/20/25
06611-7Δ106X	1	M6	10	13	14,5	25,5	4	15	30	33,5	40	47	7,5	16	10/15/20/25/30/40/50
06611-7Δ206X	2	M6	13,5	18	19,5	29,5	6,5	17,5	41,5	45,5	65	75	9,5	20	15/20/25/30/40/50/60
06611-7Δ208X	2	M8	13,5	18	19,5	29,5	6,5	17,5	41,5	45,5	65	75	9,5	20	15/20/25/30/40/50/60
06611-7Δ210X	2	M10	13,5	18	19,5	29,5	6,5	17,5	41,5	45,5	65	75	9,5	20	20/25/30/40/50/60
06611-7Δ308X	3	M8	16	21,5	23	38,5	10	24	53,5	58	80	91,5	11	22	20/25/30/40/50/60
06611-7Δ310X	3	M10	16	21,5	23	38,5	10	24	53,5	58	80	91,5	11	22	20/25/30/40/50/60
06611-7Δ412X	4	M12	19	25,5	27,5	44,6	10	26	61	66	95	109	13	24	25/30/40/50/60
06611-7Δ516X	5	M16	23	30	32,5	50,6	12	33	72	77	110	126	15,5	26	30/40/50/60

Clamping levers with thrust pad

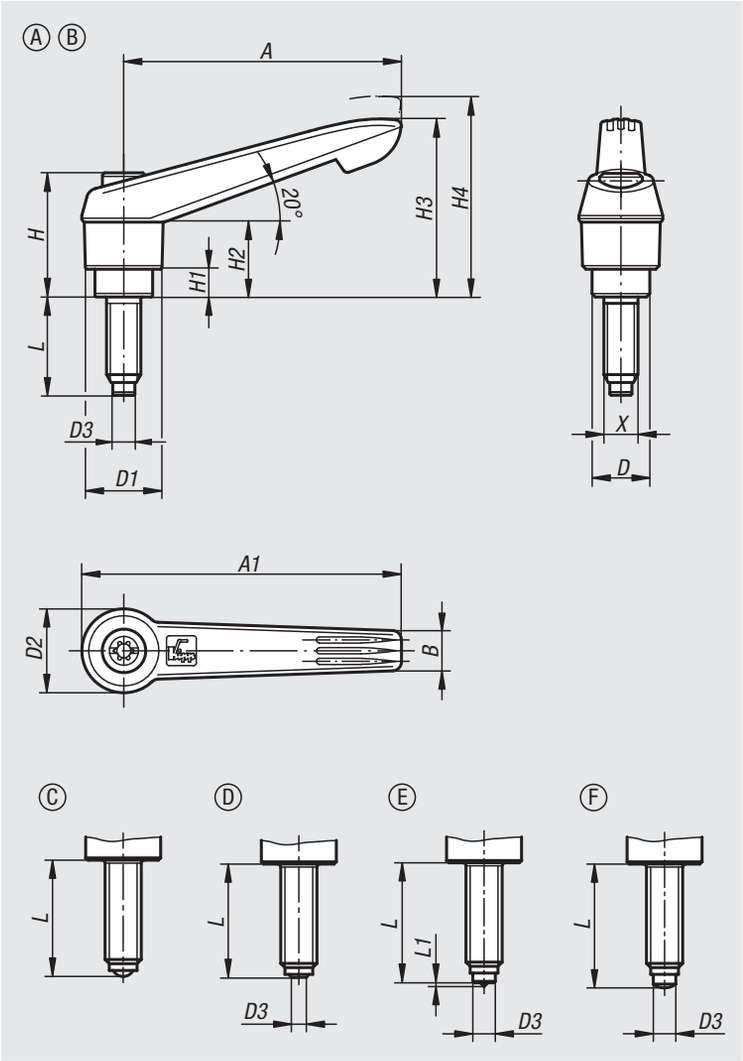

Material:
Handles fibreglass reinforced plastic with die-cast zinc toothed rings.
Steel parts grade 5.8.
Thrust pin, brass, steel or POM.
Ball in steel.

Version:
Steel parts black oxidised.

Sample order:
nlm 06612-12061X20 (include length L)

Note:
The various different thrust pins are used to avoid pressure marks, compensate for unevenness or increase the grip on the workpiece.
Where L ≥ 60 mm the thread length is 60 mm.

On request:
Other external threads, screw lengths, clamp lever colours and thrust pin types as well as special versions.
Dimension “H1” optionally available in other lengths at extra cost.

Drawing reference:
Form A: brass thrust pin
Form B: POM thrust pin
Form C: with ball
Form D: with flattened ball
Form E: with point
Form F: with half-dog point

lift to disengage

Clamping levers with thrust pad

Order No.	Form	Component material	Size	X	D	D1	D2	D3	Ball-Ø	H	H1	H2	H3	H4	A	A1	B	No. of teeth	L	L1
06612-11051X	A	pin brass	1	M5	10	13	14,5	3	-	24,5	4	15	30	33,5	40	47	7,5	16	20/30/40/50	-
06612-11061X	A	pin brass	1	M6	10	13	14,5	4	-	24,5	4	15	30	33,5	40	47	7,5	16	20/30/40/50	-
06612-12061X	A	pin brass	2	M6	13,5	18	19,5	4	-	28,5	6,5	17,5	41,5	45,5	65	75	9,5	20	20/30/40/50/60	-
06612-12081X	A	pin brass	2	M8	13,5	18	19,5	5,5	-	28,5	6,5	17,5	41,5	45,5	65	75	9,5	20	20/30/40/50/60	-
06612-12101X	A	pin brass	2	M10	13,5	18	19,5	7	-	28,5	6,5	17,5	41,5	45,5	65	75	9,5	20	20/30/40/50/60	-
06612-21051X	B	pin POM	1	M5	10	13	14,5	3	-	24,5	4	15	30	33,5	40	47	7,5	16	20,5/30,5/40,5/50,5	-
06612-21061X	B	pin POM	1	M6	10	13	14,5	3,5	-	24,5	4	15	30	33,5	40	47	7,5	16	19,8/29,8/39,8/49,8	-
06612-22061X	B	pin POM	2	M6	13,5	18	19,5	3,5	-	28,5	6,5	17,5	41,5	45,5	65	75	9,5	20	19,8/29,8/39,8/49,8/59,8	-
06612-22081X	B	pin POM	2	M8	13,5	18	19,5	5	-	28,5	6,5	17,5	41,5	45,5	65	75	9,5	20	19,6/29,6/39,6/49,6/59,6	-
06612-22101X	B	pin POM	2	M10	13,5	18	19,5	6,5	-	28,5	6,5	17,5	41,5	45,5	65	75	9,5	20	19,9/29,9/39,9/49,9/59,9	-
06612-31051X	C	ball steel	1	M5	10	13	14,5	-	3	24,5	4	15	30	33,5	40	47	7,5	16	19,5/29,5/39,5/49,5	-
06612-31061X	C	ball steel	1	M6	10	13	14,5	-	4	24,5	4	15	30	33,5	40	47	7,5	16	19,3/29,3/39,3/49,3	-
06612-32061X	C	ball steel	2	M6	13,5	18	19,5	-	4	28,5	6,5	17,5	41,5	45,5	65	75	9,5	20	19,3/29,3/39,3/49,3/59,3	-
06612-32081X	C	ball steel	2	M8	13,5	18	19,5	-	5,5	28,5	6,5	17,5	41,5	45,5	65	75	9,5	20	19,2/29,2/39,2/49,2/59,2	-
06612-32101X	C	ball steel	2	M10	13,5	18	19,5	-	7	28,5	6,5	17,5	41,5	45,5	65	75	9,5	20	19,7/29,7/39,7/49,7/59,7	-
06612-41051X	D	ball steel	1	M5	10	13	14,5	2	3	24,5	4	15	30	33,5	40	47	7,5	16	19,1/29,1/39,1/49,1	-
06612-41061X	D	ball steel	1	M6	10	13	14,5	3	4	24,5	4	15	30	33,5	40	47	7,5	16	18,6/28,6/38,6/48,6	-
06612-42061X	D	ball steel	2	M6	13,5	18	19,5	3	4	28,5	6,5	17,5	41,5	45,5	65	75	9,5	20	18,6/28,6/38,6/48,6/58,6	-
06612-42081X	D	ball steel	2	M8	13,5	18	19,5	4,1	5,5	28,5	6,5	17,5	41,5	45,5	65	75	9,5	20	18,3/28,3/38,3/48,3/58,3	-
06612-42101X	D	ball steel	2	M10	13,5	18	19,5	5,6	7	28,5	6,5	17,5	41,5	45,5	65	75	9,5	20	18,3/28,3/38,3/48,3/58,3	-
06612-51051X	E	point steel	1	M5	10	13	14,5	3	-	24,5	4	15	30	33,5	40	47	7,5	16	20/30/40/50	0,5
06612-51061X	E	point steel	1	M6	10	13	14,5	4	-	24,5	4	15	30	33,5	40	47	7,5	16	20/30/40/50	0,8
06612-52061X	E	point steel	2	M6	13,5	18	19,5	4	-	28,5	6,5	17,5	41,5	45,5	65	75	9,5	20	20/30/40/50/60	0,8
06612-52081X	E	point steel	2	M8	13,5	18	19,5	5,5	-	28,5	6,5	17,5	41,5	45,5	65	75	9,5	20	20/30/40/50/60	1
06612-52101X	E	point steel	2	M10	13,5	18	19,5	7	-	28,5	6,5	17,5	41,5	45,5	65	75	9,5	20	20/30/40/50/60	1,5
06612-61051X	F	half-dog steel	1	M5	10	13	14,5	3	-	24,5	4	15	30	33,5	40	47	7,5	16	20,5/30,5/40,5/50,5	-
06612-61061X	F	half-dog steel	1	M6	10	13	14,5	4	-	24,5	4	15	30	33,5	40	47	7,5	16	20,8/30,8/40,8/50,8	-
06612-62061X	F	half-dog steel	2	M6	13,5	18	19,5	4	-	28,5	6,5	17,5	41,5	45,5	65	75	9,5	20	20,8/30,8/40,8/50,8/60,8	-
06612-62081X	F	half-dog steel	2	M8	13,5	18	19,5	5,5	-	28,5	6,5	17,5	41,5	45,5	65	75	9,5	20	20,8/30,8/40,8/50,8/60,8	-
06612-62101X	F	half-dog steel	2	M10	13,5	18	19,5	7	-	28,5	6,5	17,5	41,5	45,5	65	75	9,5	20	20,9/30,9/40,9/50,9/60,9	-

Clamping joints

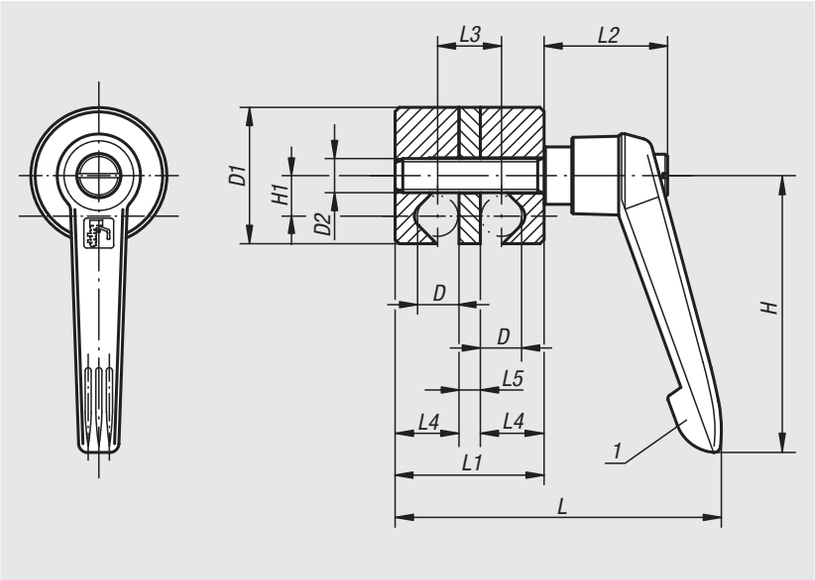

Material:
Clamping lever:
Handle fibreglass reinforced thermoplastic, black grey.
Steel parts:
grade 5.8.
Remaining components:
high-strength aluminium.

Version:
Steel parts black oxidised.
Aluminium nickel silver anodized.

Sample order:
nlm 06620-03

Note:
Clamping joints are used to clamp round cross sections (bars, tubes, etc.) and are infinitely adjustable.
The simple design together with the adjustable clamping lever permits rapid clamping.

Drawing reference:
1) Clamping lever

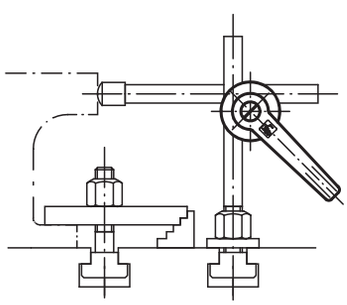

Order No.	Size	D	D1	D2	L	L1	L2	L3	L4	L5	H	H1
06620-01	1	8	28	M8	72	31	29	13	13	5	65	8,5
06620-02	2	10	32	M8	76	35	29	15	15	5	65	9,5
06620-03	3	12	36	M8	81	40	29	18	17	6	65	10,5
06620-04	4	16	45	M10	103	50	37,5	22	22	6	80	13,5
06620-05	5	20	74	M10	131	70	42,5	30	30	10	95	22

Clamping joints

individually adjustable

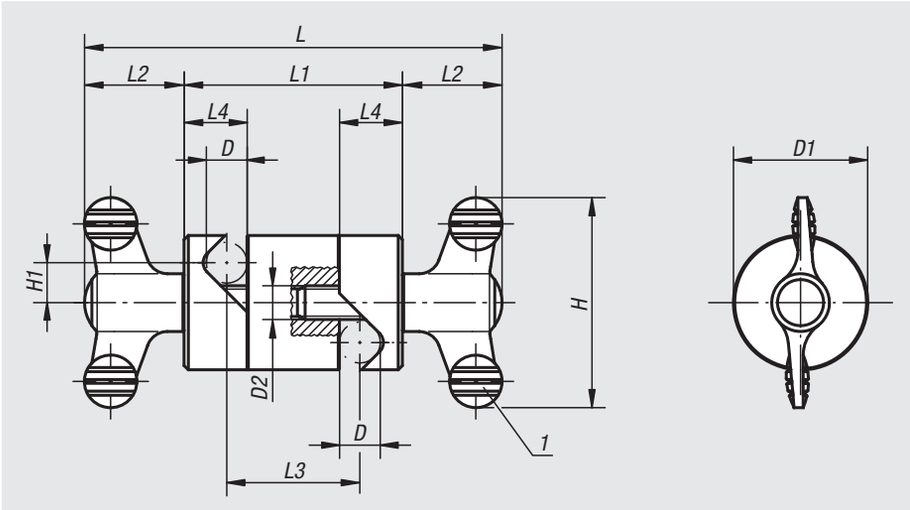

Material:
Wing grip:
grip black grey thermoplastic.
Screw steel 5.8.
Remaining components:
high-strength aluminium.

Version:
Steel parts blue-passivated.
Aluminium nickel silver anodized.

Sample order:
nlm 06621-02

Note:
Clamping joints are used to clamp round cross sections (bars, tubes, etc.) and are individually and infinitely adjustable.
The simple design together with the wing grip permits rapid clamping.

Drawing reference:
1) wing grip

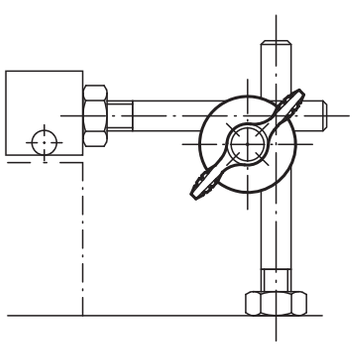

Order No.	Size	D	D1	D2	L	L1	L2	L3	L4	H	H1
06621-01	1	8	28	M8	90	42	24	24	13	50	8,5
06621-02	2	10	32	M8	100	52	24	32	15	50	9,5
06621-03	3	12	36	M8	104	56	24	34	17	50	10,5
06621-04	4	16	45	M10	143,2	72	35,6	44	22	75	13,5
06621-05	5	20	74	M10	173,2	102	35,6	62	30	75	22

Multiple connectors

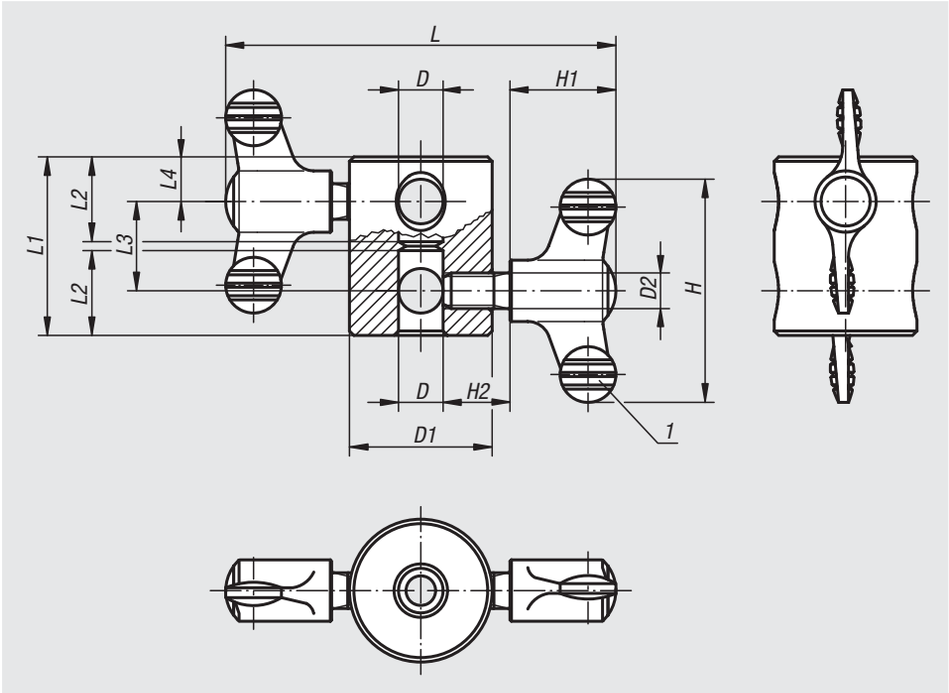

Material:
Wing grip:
grip black grey thermoplastic.
Screw steel 5.8.
Body:
high-strength aluminium.

Version:
Steel parts blue-passivated.
Aluminium nickel silver anodized.

Sample order:
nlm 06622-04

Note:
Multiple connectors are used to extend round cross sections (bars, tubes, etc.) in a coaxial or parallel arrangement.
By a parallel arrangement, a strengthening or stiffening of the construction can be achieved.
The bore system in the body also allows for the production of right-angled connections.

Drawing reference:
1) wing grip

Arrangement:

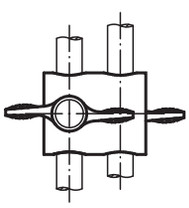

parallel

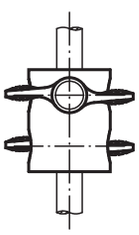

coaxial

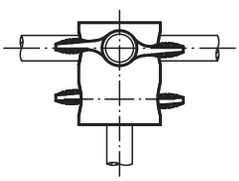

right-angled

Order No.	Size	D	D1	D2	L	L1	L2	L3	L4	H	H1	H2
06622-01	1	8	28	M8	86	36	17	20	8	50	24	15
06622-02	2	10	32	M8	88	40	19	20	10	50	24	15
06622-03	3	12	36	M8	90	44	21	20	12	50	24	15
06622-04	4	16	45	M10	127,2	56	27	24	16	75	35,6	20

T-grips

stainless steel

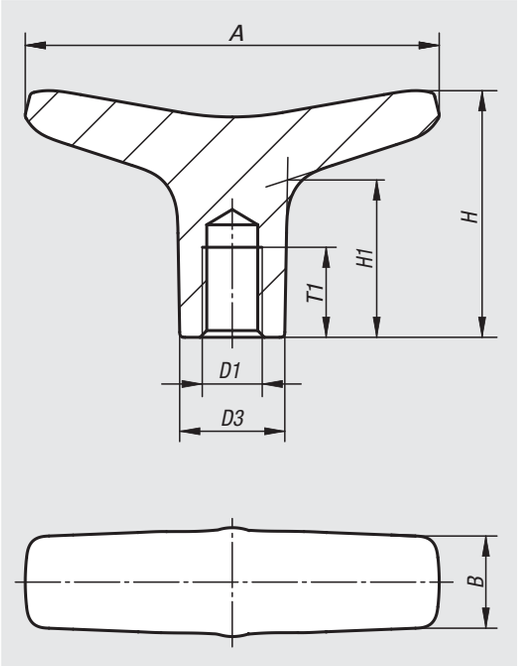

Material:
Stainless steel 1.4308.

Version:
Electropolished or blasted.

Sample order:
nlm 06648-55061

Order No.	Surface	A	B	D1	D3	H	H1	T1
06648-55061	blasted	55,2	12,3	M6	14	32,9	21	12
06648-55081	blasted	55,2	12,3	M8	14	32,9	21	12
06648-65061	blasted	65,3	14	M6	16	37	22,7	16
06648-65081	blasted	65,3	14	M8	16	37	22,7	16
06648-65101	blasted	65,3	14	M10	16	37	22,7	16
06648-75101	blasted	75,3	17,8	M10	20	41,2	24,9	16
06648-75121	blasted	75,3	17,8	M12	20	41,2	24,9	16
06648-55062	electropolished	55,2	12,3	M6	14	32,9	21	12
06648-55082	electropolished	55,2	12,3	M8	14	32,9	21	12
06648-65062	electropolished	65,3	14	M6	16	37	22,7	16
06648-65082	electropolished	65,3	14	M8	16	37	22,7	16
06648-65102	electropolished	65,3	14	M10	16	37	22,7	16
06648-75102	electropolished	75,3	17,8	M10	20	41,2	24,9	16
06648-75122	electropolished	75,3	17,8	M12	20	41,2	24,9	16

T-grips

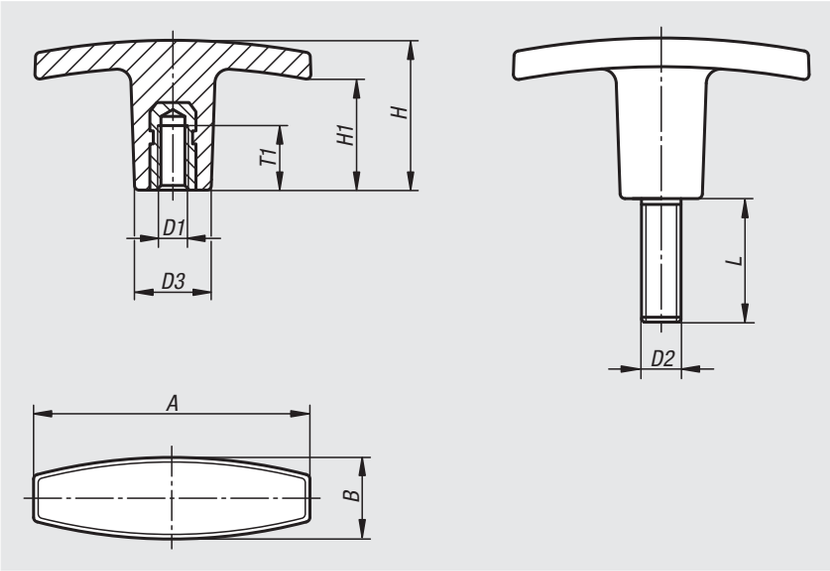

Material:
Fibreglass reinforced thermoplastic.
Tapped bush brass.
Screw steel.

Version:
Grip, black.
Screw galvanized.

Sample order:
nlm 06649-25005X15 (include length L)

On request:
Grip colour red, yellow, green, blue, white or grey (min. quanitity 500).

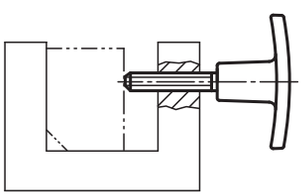

Order No.	Version	A	B	D1	D3	H	H1	T1
06649-14005	internal thread	40	13	M5	13	30,5	20	10
06649-15005	internal thread	50	15	M5	14	24	16	10
06649-16006	internal thread	60	17	M6	16	31,5	23	12
06649-17108	internal thread	71	19,5	M8	20	36	19	20
06649-17110	internal thread	71	19,5	M10	20	36	19	20
06649-18010	internal thread	80	26	M10	26	39,5	26	25
06649-18012	internal thread	80	26	M12	26	39,5	26	25

Order No.	Version	A	B	D2	D3	H	H1	L
06649-24005X	external thread	40	13	M5	13	30,5	20	15
06649-25005X	external thread	50	15	M5	14	24	16	15/20
06649-26006X	external thread	60	17	M6	16	31,5	23	20/25
06649-27108X	external thread	71	19,5	M8	20	36	19	20/30
06649-27110X	external thread	71	19,5	M10	20	36	19	20/30
06649-28010X	external thread	80	26	M10	26	39,5	26	30
06649-28012X	external thread	80	26	M12	26	39,5	26	40

T-grips

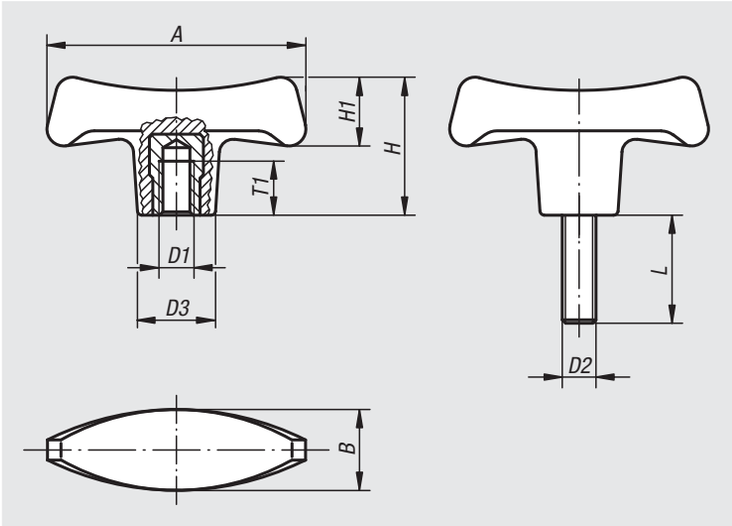

Material:
Duroplast PF 31, black.
Steel bush and stud, galvanized.

Version:
High-gloss polished.

Sample order:
nlm 06650-27006X18 (include length L)

Note:
The versions 06650-17008 and 06650-18008 have a bush in copper-plated steel.

On request:
Other screw sizes, screw lengths and colours.

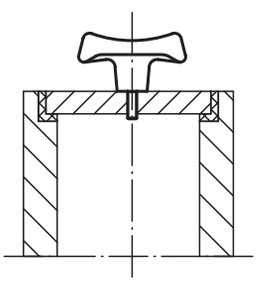

Order No.	Version	A	B	D1	D3	H	H1	T1
06650-17006	internal thread	70	22	M6	19,6	38,8	20,2	12
06650-17008	internal thread	70	22	M8	19,6	38,8	20,2	14
06650-17010	internal thread	70	22	M10	19,6	38,8	20,2	14
06650-18008	internal thread	80	25	M8	22,3	44	23	14
06650-18010	internal thread	80	25	M10	22,3	44	23	22
06650-19010	internal thread	90	28	M10	25	49,6	26	22
06650-19012	internal thread	90	28	M12	25	49,6	26	21

Order No.	Version	A	B	D2	D3	H	H1	L
06650-27006X	external thread	70	22	M6	19,6	38,8	20,2	18
06650-27008X	external thread	70	22	M8	19,6	38,8	20,2	24
06650-28010X	external thread	80	25	M10	22,3	44	23	20/30
06650-29010X	external thread	90	28	M10	25	49,6	26	30
06650-29012X	external thread	90	28	M12	25	49,6	26	24

Wing grips

internal thread, stainless steel

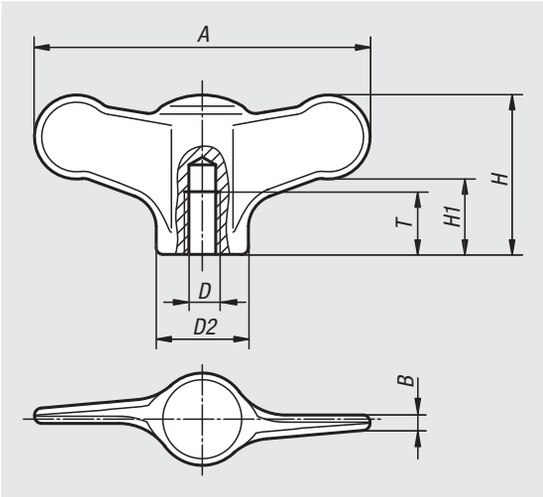

Material:
Stainless steel 1.4308.

Version:
Blasted or ground and polished.

Sample order:
nlm 06651-105

On request:
With external threads.

Order No.	Surface	D	D2	A	B	H	H1	T
06651-904	polished	M4	10,5	38	1,7	18	8,5	9
06651-905	polished	M5	10,5	38	1,7	18	8,5	9
06651-906	polished	M6	10,5	38	1,7	18	8,5	9
06651-105	polished	M5	14	50	2,3	24	11,5	12
06651-106	polished	M6	14	50	2,3	24	11,5	12
06651-208	polished	M8	21	75	3,4	35	16,5	15
06651-210	polished	M10	21	75	3,4	35	16,5	15
06651-9041	blasted	M4	10,5	38	1,7	18	8,5	9
06651-9051	blasted	M5	10,5	38	1,7	18	8,5	9
06651-9061	blasted	M6	10,5	38	1,7	18	8,5	9
06651-1051	blasted	M5	14	50	2,3	24	11,5	12
06651-1061	blasted	M6	14	50	2,3	24	11,5	12
06651-2081	blasted	M8	21	75	3,4	35	16,5	15
06651-2101	blasted	M10	21	75	3,4	35	16,5	15

Wing grips

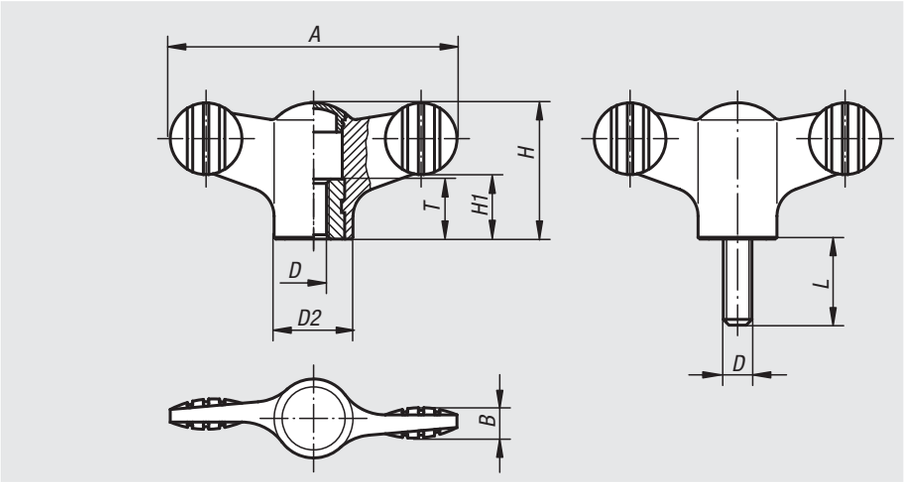

Material:
Grip black grey thermoplastic.
Bush and screw steel 5.8 or stainless steel 1.4305.

Version:
Bush or screw blue passivated or bright stainless steel.

Sample order:
nlm 06652-1057X20 (cap colour bright yellow; include length L)

Note:
Δ Add the desired cap colour here. No colour code is required for black grey caps.

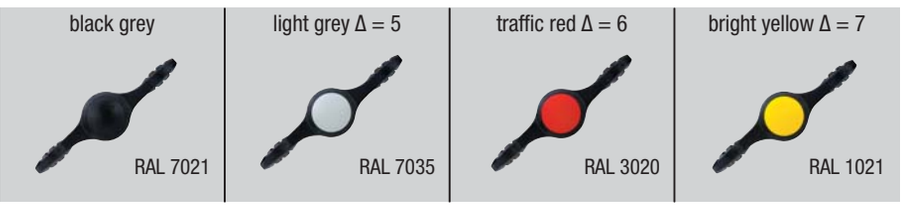

Wing grips with internal thread

Order No. steel	Order No. stainless steel	D	D2	A	B	H	H1	T
06652-904Δ	06652-0904Δ	M4	12	38	4,5	18	8,5	10
06652-905Δ	06652-0905Δ	M5	12	38	4,5	18	8,5	10
06652-906Δ	06652-0906Δ	M6	12	38	4,5	18	8,5	10
06652-105Δ	06652-0105Δ	M5	14	50	5	24	11,5	10
06652-106Δ	06652-0106Δ	M6	14	50	5	24	11,5	10
06652-208Δ	06652-0208Δ	M8	21	75	7	35,6	16,5	14
06652-210Δ	06652-0210Δ	M10	21	75	7	35,6	16,5	14

Wing grips with external thread

Order No. steel	Order No. stainless steel	D	A	B	D2	H	H1	L
06652-904ΔX	06652-0904ΔX	M4	38	4,5	12	18	8,5	10/15
06652-905ΔX	06652-0905ΔX	M5	38	4,5	12	18	8,5	15/20/30
06652-906ΔX	06652-0906ΔX	M6	38	4,5	12	18	8,5	20/30/40
06652-105ΔX	06652-0105ΔX	M5	50	5	14	24	11,5	15/20
06652-106ΔX	06652-0106ΔX	M6	50	5	14	24	11,5	20/30/40
06652-108ΔX	06652-0108ΔX	M8	50	5	14	24	11,5	20/30/40
06652-208ΔX	06652-0208ΔX	M8	75	7	21	35,6	16,5	20/30/40
06652-210ΔX	06652-0210ΔX	M10	75	7	21	35,6	16,5	20/30/40/50

Wing grips

with tapped through bush

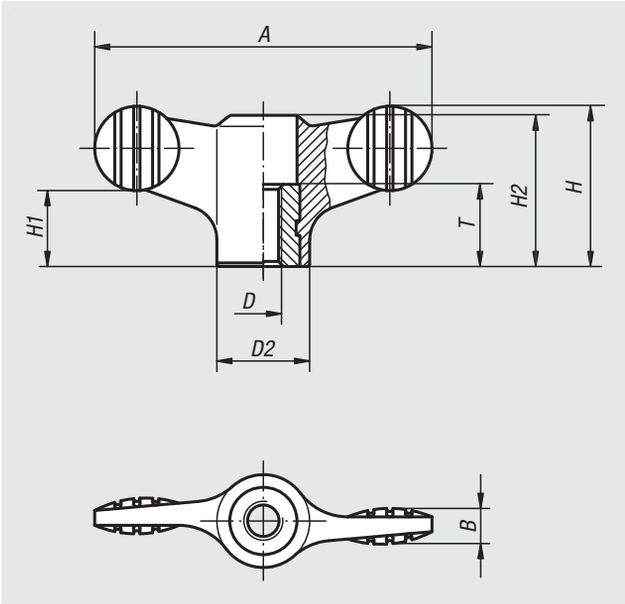

Material:
Grip black.
Bush steel 5.8 or stainless steel 1.4305.

Version:
Blue passivated steel or bright stainless steel.

Sample order:
nlm 06652-1904

Order No.	Component material	D	D2	A	B	H	H1	H2	T
06652-1904	steel	M4	12	38	4,5	18	8,5	16,1	10
06652-1905	steel	M5	12	38	4,5	18	8,5	16,1	10
06652-1906	steel	M6	12	38	4,5	18	8,5	16,1	10
06652-1105	steel	M5	14	50	5	24	11,5	22	10
06652-1106	steel	M6	14	50	5	24	11,5	22	10
06652-1208	steel	M8	21	75	7	35,6	17	33,3	14
06652-1210	steel	M10	21	75	7	35,6	17	33,3	14
06652-10904	stainless steel	M4	12	38	4,5	18	8,5	16,1	10
06652-10905	stainless steel	M5	12	38	4,5	18	8,5	16,1	10
06652-10906	stainless steel	M6	12	38	4,5	18	8,5	16,1	10
06652-10105	stainless steel	M5	14	50	5	24	11,5	22	10
06652-10106	stainless steel	M6	14	50	5	24	11,5	22	10
06652-10208	stainless steel	M8	21	75	7	35,6	17	33,3	14
06652-10210	stainless steel	M10	21	75	7	35,6	17	33,3	14

Wing grips antistatic

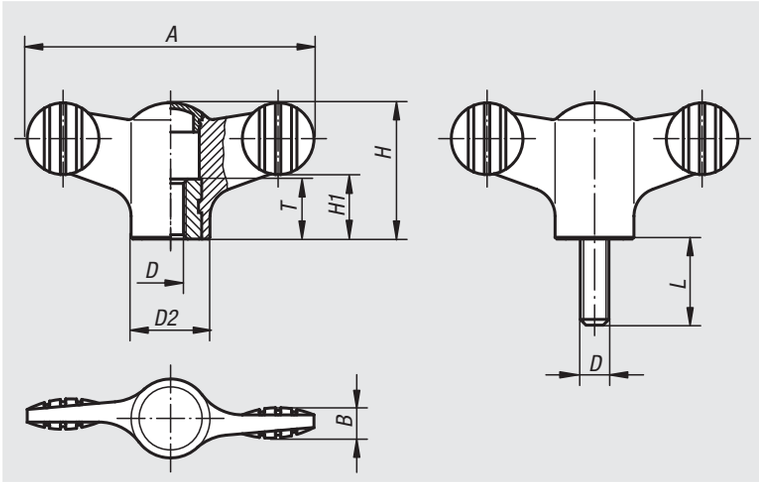

Material:
Thermoplastic, graphite black.
Bush or screw steel 5.8.

Version:
Screw blue passivated.

Sample order:
nlm 06652-1110624X20

Application:
Sensitive electrical or electronic equipment, components and devices (ESD sensitive elements) may be damaged or destroyed by electrostatic discharges (ESD) in the immediate vicinity.
Electrostatic discharges can come from people or through handling ESD sensitive components (e.g. during production, assembly, transport, storage etc).
Electrically conductive products which conform to DIN EN 61340-5-1 are essential within electronic environments to prevent an electrostatic discharge.
These products can be used for ESD applications or in ESD protection areas (EPA) in accordance with DIN EN 61340-5-1.
The yellow ESD logo is printed on the side of the product to clearly identify it.

Safety:
These ESD products can also be used for devices, components and protection systems in areas with high risk of explosion.
Use of these ESD products prevents the occurrence of electrostatic spark discharges, eliminating the potential ignition of gases and dusts which could lead to explosions in enclosed spaces.
Manufacturers and operators must use and conform to ATEX directives for the protection of persons working in areas with high risk of explosion.
These ESD products are certified by TÜV-Süd in relation to their electrical discharge capability.

Target groups:
Device manufacturers required to conform to ATEX product directive 2014/34/EU.
Operators required to conform to ATEX worker protection directive 1999/92/EC.

Wing grips antistatic with internal thread

Order No.	Component material	A	B	D	D2	H	H1	T
06652-1110624	steel	50	5	M6	14	24	11,5	10

Wing grips antistatic with external thread

Order No.	Component material	A	B	D	D2	H	H1	L
06652-1110624X20	steel	50	5	M6	14	24	11,5	20

Wing grips “Miniwing”

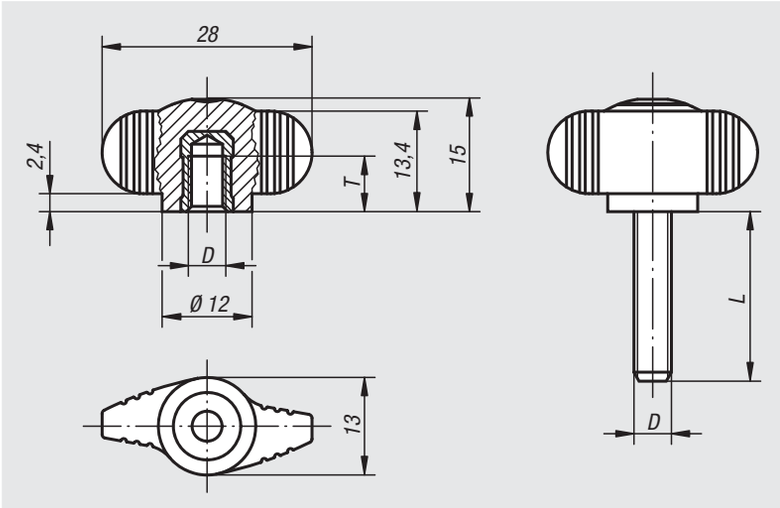

Material:
Grip black grey thermoplastic.
Bush brass or stainless steel 1.4305.
Screw steel 5.8 or stainless steel 1.4305.

Version:
Steel blue passivated.
Stainless steel, bright.

Sample order:
nlm 06652-005X10 (include length L)

Wing grips “Miniwing” with internal thread

Order No.	Component material	D	T
06652-004	brass	M4	6
06652-005	brass	M5	7,5
06652-006	brass	M6	9
06652-0004	stainless steel	M4	6
06652-0005	stainless steel	M5	7,5
06652-0006	stainless steel	M6	9

Wing grips “Miniwing” with external thread

Order No.	Component material	D	L
06652-004X	steel	M4	8
06652-005X	steel	M5	10/15/20
06652-006X	steel	M6	10/15/20/25/30
06652-008X	steel	M8	20/25/30/40
06652-0004X	stainless steel	M4	8
06652-0005X	stainless steel	M5	10/15/20
06652-0006X	stainless steel	M6	10/15/20/25/30
06652-0008X	stainless steel	M8	20/25/30/40

Wing grips “Miniwing”

with tapped through bush

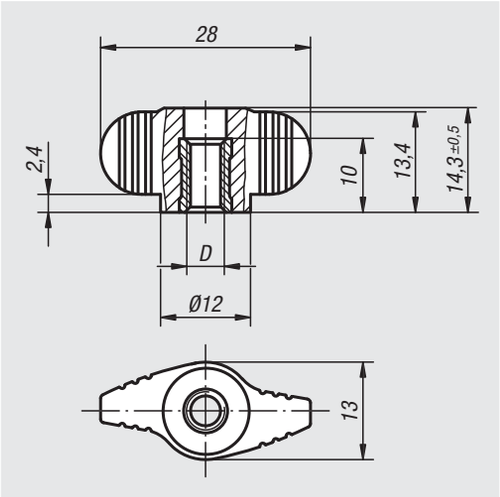

Material:
Grip black.
Bush steel 5.8 or stainless steel 1.4305.

Version:
Steel blue passivated.
Stainless steel, bright.

Sample order:
nlm 06652-1004

Order No.	Component material	D
06652-1004	steel	M4
06652-1005	steel	M5
06652-1006	steel	M6
06652-10004	stainless steel	M4
06652-10005	stainless steel	M5
06652-10006	stainless steel	M6

Wing grips “Miniwing” antistatic

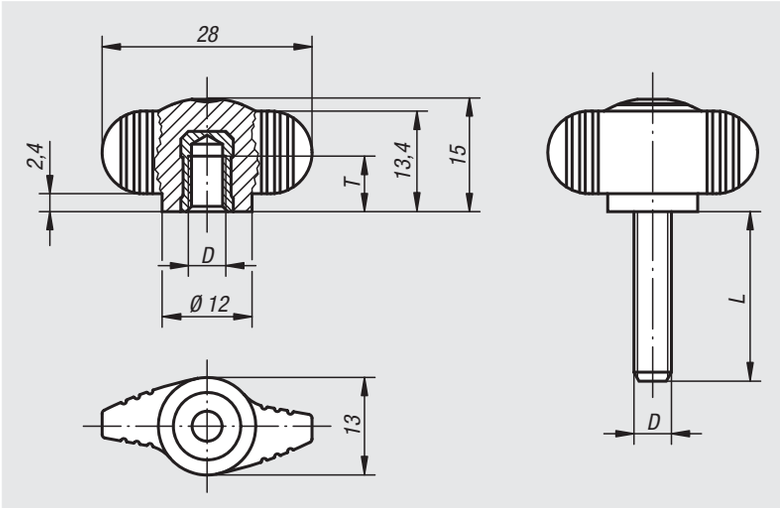

Material:
Thermoplastic, graphite black.
Bush brass or threaded pin steel 5.8.

Version:
Screw blue passivated.

Sample order:
nlm 06652-1100624X15

Application:
Sensitive electrical or electronic equipment, components and devices (ESD sensitive elements) may be damaged or destroyed by electrostatic discharges (ESD) in the immediate vicinity.
Electrostatic discharges can come from people or through handling ESD sensitive components (e.g. during production, assembly, transport, storage etc).
Electrically conductive products which conform to DIN EN 61340-5-1 are essential within electronic environments to prevent an electrostatic discharge.
These products can be used for ESD applications or in ESD protection areas (EPA) in accordance with DIN EN 61340-5-1.
The yellow ESD logo is printed on the side of the product to clearly identify it.

Safety:
These ESD products can also be used for devices, components and protection systems in areas with high risk of explosion.
Use of these ESD products prevents the occurrence of electrostatic spark discharges, eliminating the potential ignition of gases and dusts which could lead to explosions in enclosed spaces.
Manufacturers and operators must use and conform to ATEX directives for the protection of persons working in areas with high risk of explosion.
These ESD products are certified by TÜV-Süd in relation to their electrical discharge capability.

Target groups:
Device manufacturers required to conform to ATEX product directive 2014/34/EU.
Operators required to conform to ATEX worker protection directive 1999/92/EC.

Wing grips “Miniwing” antistatic with internal thread

Order No.	Component material	D	T
06652-1100624	steel	M6	9

Wing grips “Miniwing” antistatic with external thread

Order No.	Component material	D	L
06652-1100624X15	steel	M6	15

Wing grips one-sided

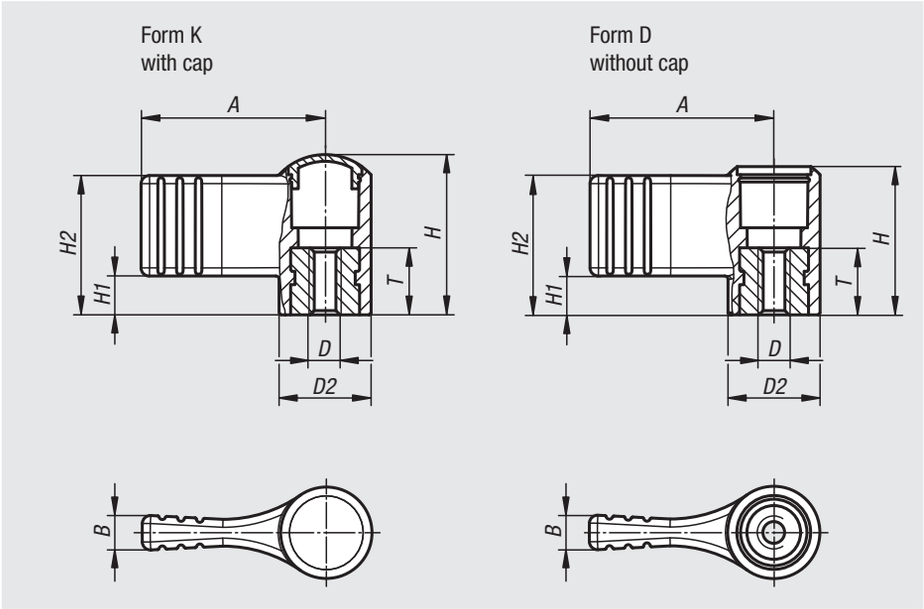

Material:
Thermoplastic.
Bush steel 5.8 or stainless steel 1.4305.

Version:
Blue passivated steel or bright stainless steel.

Sample order:
nlm 06660-09046 (Bush M4 stainless steel, cap traffic red.)

Note:
Δ Add the desired cap colour here. No colour code is required for black grey caps.

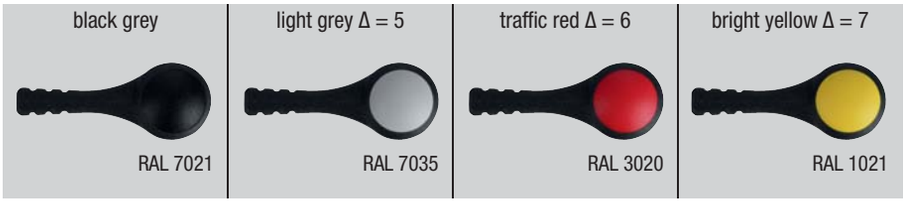

Wing grips, one-sided with cap

Order No. steel	Order No. stainless steel	Form	Size	D	D2	A	B	H	H1	H2	T
06660-904Δ	**06660-0904Δ**	K	9	M4	12	22	4,4	18	4,5	15,5	10
06660-905Δ	**06660-0905Δ**	K	9	M5	12	22	4,4	18	4,5	15,5	10
06660-906Δ	**06660-0906Δ**	K	9	M6	12	22	4,4	18	4,5	15,5	10
06660-105Δ	**06660-0105Δ**	K	1	M5	14	27,5	5,1	24	5,8	20,8	10
06660-106Δ	**06660-0106Δ**	K	1	M6	14	27,5	5,1	24	5,8	20,8	10
06660-208Δ	**06660-0208Δ**	K	2	M8	21	37,5	6,3	36	8,5	30,5	14
06660-210Δ	**06660-0210Δ**	K	2	M10	21	37,5	6,3	36	8,5	30,5	14

Wing grips, one-sided without cap

Order No. steel	Order No. stainless steel	Form	Size	D	D2	A	B	H	H1	H2	T
06660-1904	**06660-10904**	D	9	M4	12	22	4,4	16,1	4,5	15,5	10
06660-1905	**06660-10905**	D	9	M5	12	22	4,4	16,1	4,5	15,5	10
06660-1906	**06660-10906**	D	9	M6	12	22	4,4	16,1	4,5	15,5	10
06660-1105	**06660-10105**	D	1	M5	14	27,5	5,1	22,1	5,8	20,8	10
06660-1106	**06660-10106**	D	1	M6	14	27,5	5,1	22,1	5,8	20,8	10
06660-1208	**06660-10208**	D	2	M8	21	37,5	6,3	33,3	8,5	30,5	14
06660-1210	**06660-10210**	D	2	M10	21	37,5	6,3	33,3	8,5	30,5	14

Wing grips

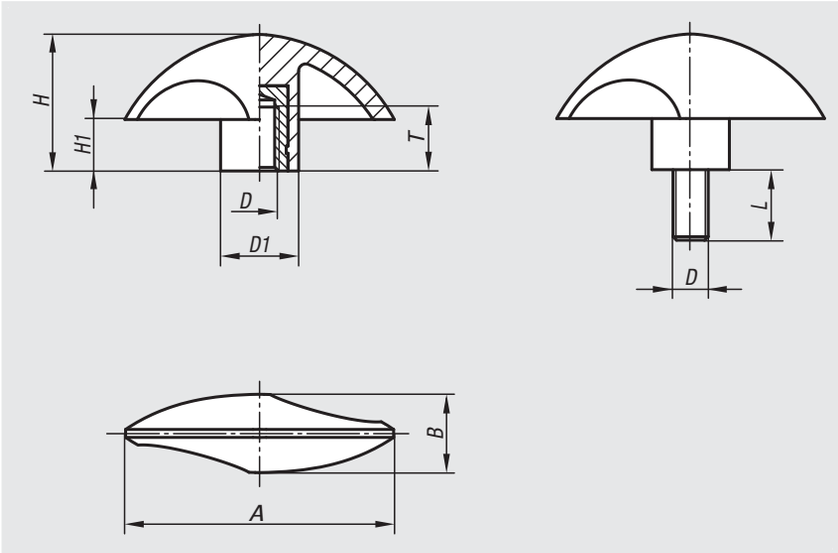

Material:
Grip polyamide, glass bead reinforced.
Bush brass or steel.
Screw steel.

Version:
Steel galvanized.

Sample order:
nlm 06665-15006

Note:
Temperature resistance from -50 °C to 130 °C.
Resistant to common chemicals and oils.

Wing grips with internal thread

Order No.	Component material	D	D1	A	B	H	H1	T
06665-15006	brass	M6	15	51	15	25,5	9,5	9
06665-16008	steel	M8	18	61,5	18	31	11,5	14
06665-17510	steel	M10	22	76	22	38,5	14,5	14

Wing grips with external thread

Order No.	Component material	D	D1	A	B	H	H1	L
06665-25006X15	steel	M6	15	51	15	25,5	9,5	15
06665-26008X20	steel	M8	18	61,5	18	31	11,5	20
06665-27510X20	steel	M10	22	76	22	38,5	14,5	20

Grip nuts

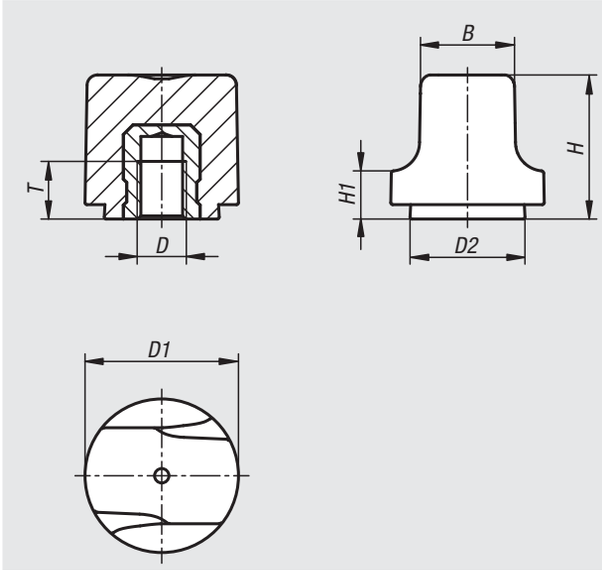

Material:
Thermoplastic black.
Bush steel, stainless steel or brass.

Version:
Bush blue passivated steel, stainless steel and brass bright.

Sample order:
nlm 06666-103

Order No.	Component material	B	D	D1	D2	H	H1	T
06666-103	brass	10	M3	16	12	15	5	4,5
06666-104	brass	10	M4	16	12	15	5	6
06666-204	brass	12,3	M4	20	15	18,5	6	6
06666-205	brass	12,3	M5	20	15	18,5	6	6
06666-305	steel	15,3	M5	25	18,7	22,9	7,3	8,5
06666-306	steel	15,3	M6	25	18,7	22,9	7,3	9
06666-1003	stainless steel	10	M3	16	12	15	5	4,5
06666-1004	stainless steel	10	M4	16	12	15	5	6
06666-2004	stainless steel	12,3	M4	20	15	18,5	6	6
06666-2005	stainless steel	12,3	M5	20	15	18,5	6	6
06666-3005	stainless steel	15,3	M5	25	18,7	22,9	7,3	8,5
06666-3006	stainless steel	15,3	M6	25	18,7	22,9	7,3	9

Grip screws

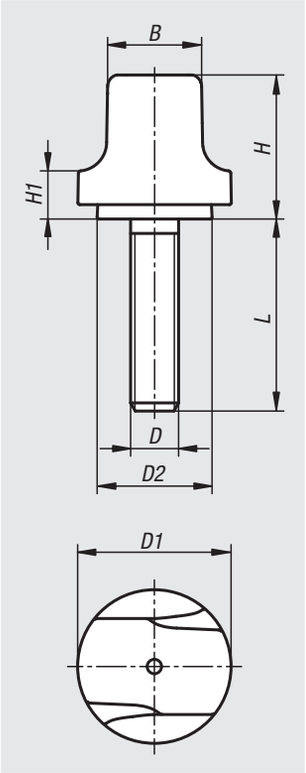

Material:
Thermoplastic black. Screw steel or stainless steel.

Version:
Screw blue passivated steel or bright stainless steel.

Sample order:
nlm 06666-103X8 (include length L)

Order No. steel	Order No. stainless steel	B	D	D1	D2	H	H1	L
06666-103X	**06666-1003X**	10	M3	16	12	15	5	8/10/12/15
06666-104X	**06666-1004X**	10	M4	16	12	15	5	10/15/20
06666-105X	**06666-1005X**	10	M5	16	12	15	5	10/15/20
06666-204X	**06666-2004X**	12,3	M4	20	15	18,5	6	10/15/20
06666-205X	**06666-2005X**	12,3	M5	20	15	18,5	6	10/15/20/25
06666-206X	**06666-2006X**	12,3	M6	20	15	18,5	6	10/15/20/25
06666-305X	**06666-3005X**	15,3	M5	25	18,7	22,9	7,3	10/15/20/25
06666-306X	**06666-3006X**	15,3	M6	25	18,7	22,9	7,3	10/15/20/25
06666-308X	**06666-3008X**	15,3	M8	25	18,7	22,9	7,3	15/20/25/30

Triangular grips

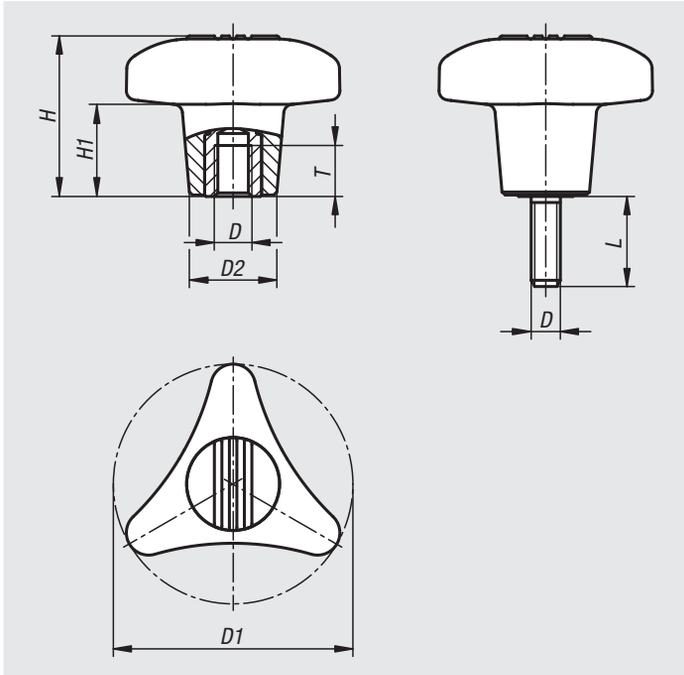

Material:
Grip glass-bead reinforced thermoplastic.
Cap thermoplastic.
Steel parts grade 5.8.

Version:
Grip and cap black grey (RAL 7021).
Steel parts blue-passivated.

Sample order:
nlm 06699-18010X15 (include length L)

On request:
Other screw lengths and colours.
Metal parts stainless steel.

Triangular grips with internal thread

Order No.	D	D1	D2	H	H1	T
06699-18008	M8	80	29,2	53,5	31	17
06699-18010	M10	80	29,2	53,5	31	17
06699-18012	M12	80	29,2	53,5	31	17

Triangular grips with external thread

Order No.	D	D1	D2	H	H1	L
06699-18008X	M8	80	29,2	53,5	31	15/20/30/40/50
06699-18010X	M10	80	29,2	53,5	31	15/20/30/40/50
06699-18012X	M12	80	29,2	53,5	31	15/20/30/40/50

Triangular grips

with high collar

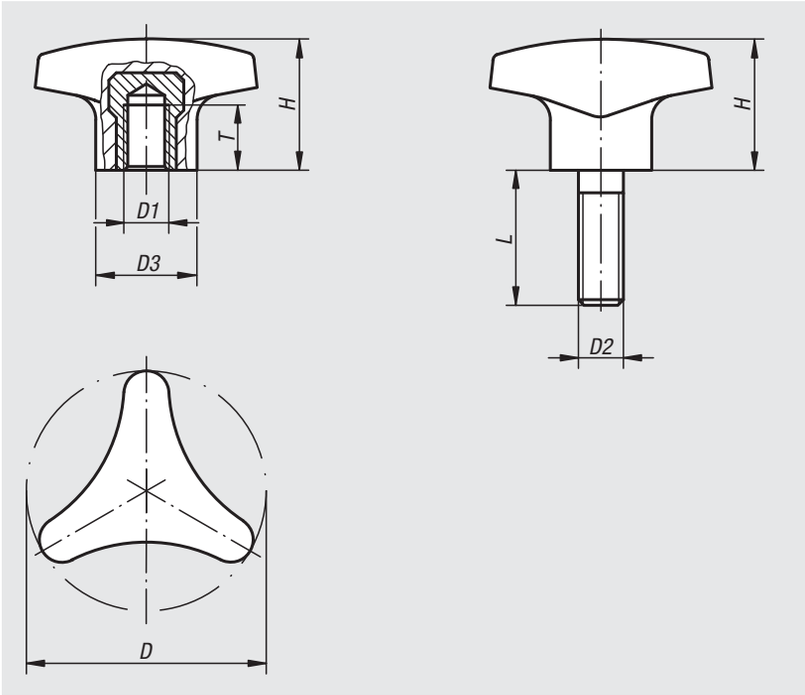

Material:
Black Duroplast PF 31.
Bush and screw galvanized steel or bright stainless steel.

Version:
High-gloss polished.

Sample order:
nlm 06702-14008X20

On request:
Other screw sizes, screw lengths and colours.

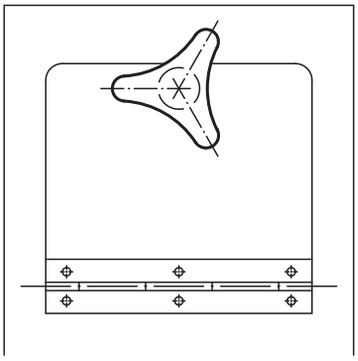

Triangular grips with high collar, internal thread

Order No.	Component material	D	D1	D3	H	T
06702-14006	steel	40	M6	14	22	12
06702-15008	steel	50	M8	18	28	14
06702-16210	steel	62	M10	22	35	14
06702-24006	stainless steel	40	M6	12	22	9
06702-25008	stainless steel	50	M8	15	28	13
06702-26210	stainless steel	62	M10	18	35	13

Triangular grips with high collar, external thread

Order No.	Component material	D	D2	D3	H	L
06702-14006X15	steel	40	M6	14	22	15
06702-14008X20	steel	40	M8	14	22	20
06702-15008X20	steel	50	M8	18	28	20
06702-15010X25	steel	50	M10	22	28	25
06702-16210X25	steel	62	M10	22	35	25
06702-24006X20	stainless steel	40	M6	12	22	20
06702-24008X20	stainless steel	40	M8	12	22	20
06702-25008X20	stainless steel	50	M8	15	28	20
06702-25010X30	stainless steel	50	M10	15	28	30
06702-26210X30	stainless steel	62	M10	18	35	30

Handwheels

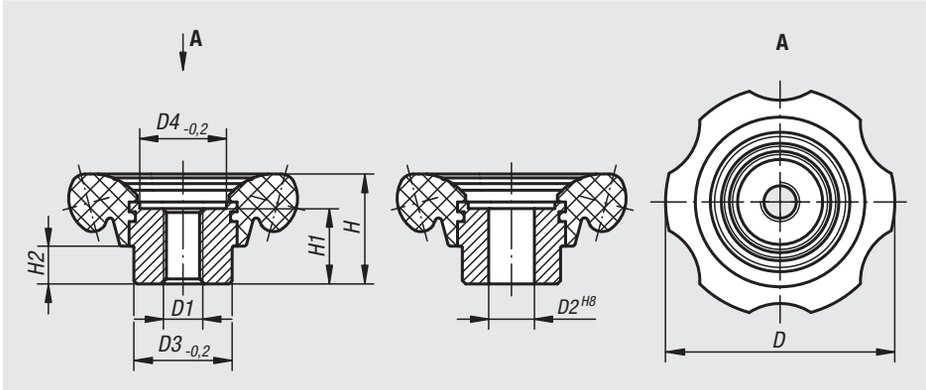

Material:
Handwheel Duroplast PF 31.
Bush steel, black oxidised.

Version:
High-gloss polished, black.

Sample order:
nlm 06830-70112

Order No.	Version	D	D1	D2	D3	D4	H	H1	H2
06830-70110	internal thread	70	M10	-	30	26,5	33,5	23	11,5
06830-70112	internal thread	70	M12	-	30	26,5	33,5	23	11,5
06830-83112	internal thread	83	M12	-	35	31,5	40	28	14
06830-83116	internal thread	83	M16	-	35	31,5	40	28	14
06830-70212	reamed hole	70	-	12	30	26,5	33,5	23	11,5
06830-70214	reamed hole	70	-	14	30	26,5	33,5	23	11,5
06830-83214	reamed hole	83	-	14	35	31,5	40	28	14
06830-83216	reamed hole	83	-	16	35	31,5	40	28	14

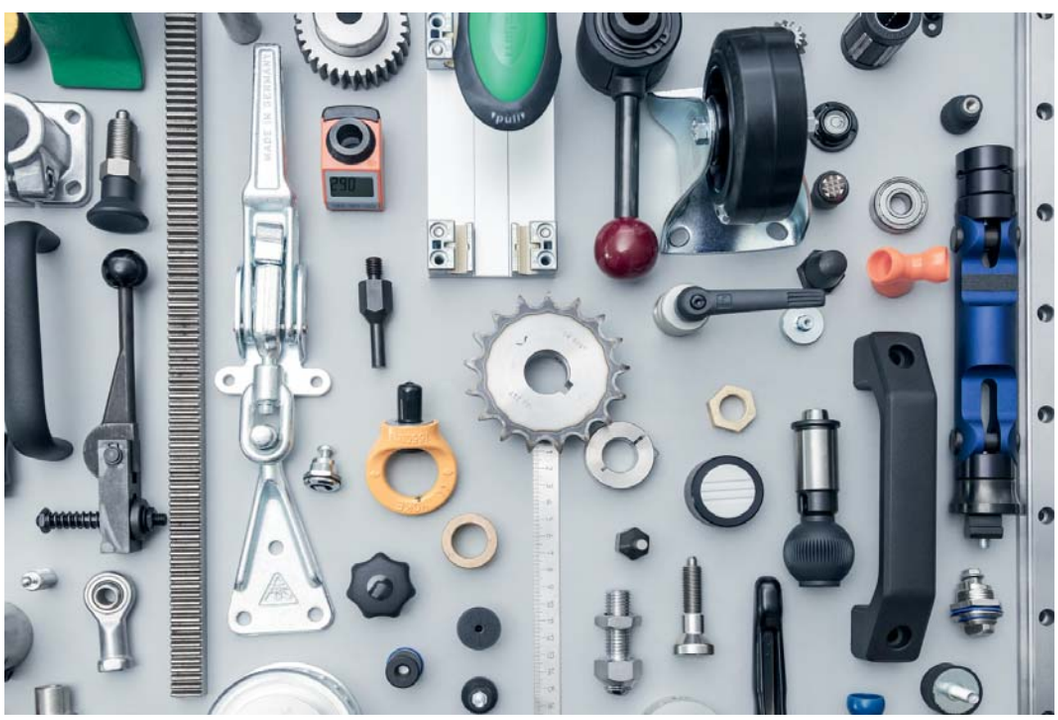

Five lobe grips

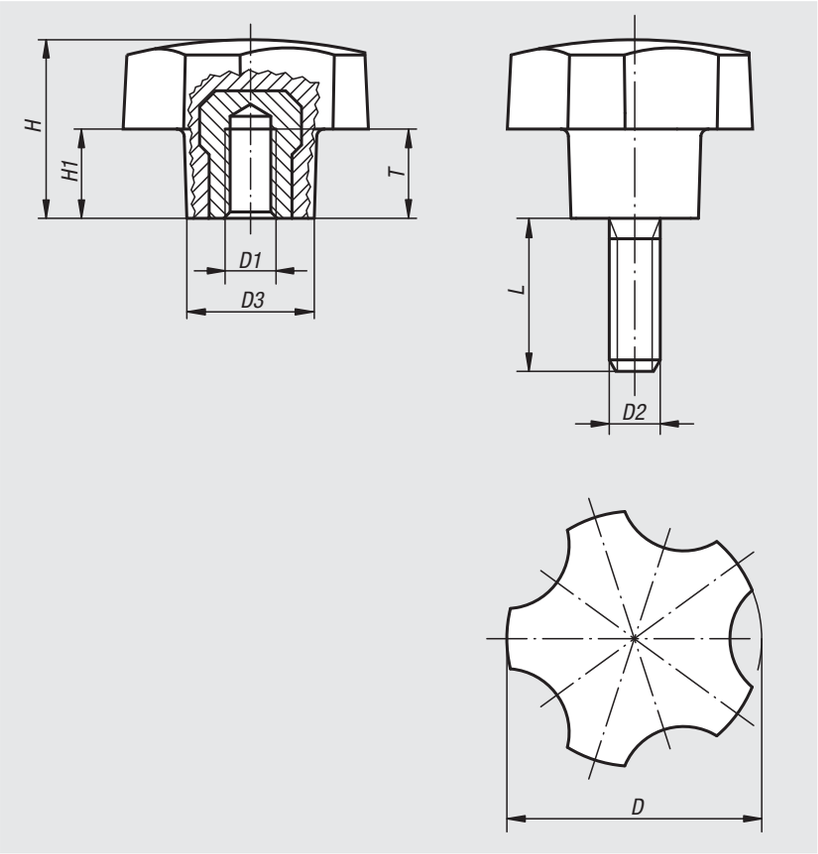

Material:
Duroplast PF 31, black.
Steel bush and stud, galvanized.

Version:
High-gloss polished.

Sample order:
nlm 06850-3206X12 (include length L)

Note:
The versions 06850-3205 and 06850-3206 have a brass bush.

On request:
Other screw sizes, screw lengths and colours.

Five lobe grips with internal thread

Order No.	D	D1	D3	H	H1	T
06850-3205	32	M5	16	22,4	11,2	10
06850-3206	32	M6	16	22,4	11,2	9
06850-4006	40	M6	20	28	14	12
06850-4008	40	M8	20	28	14	14
06850-4010	40	M10	20	28	14	14
06850-5008	50	M8	25	35	17,5	14
06850-5010	50	M10	25	35	17,5	14

Five lobe grips with external thread

Order No.	D	D2	D3	H	H1	L
06850-3206X	32	M6	16	22,4	11,2	12/18
06850-3208X	32	M8	16	22,4	11,2	16/24
06850-4006X	40	M6	20	28	14	18
06850-4008X	40	M8	20	28	14	16/20/24
06850-4010X	40	M10	20	28	14	30
06850-5008X	50	M8	25	35	17,5	16/24
06850-5010X	50	M10	25	35	17,5	20/30

Five lobe grips

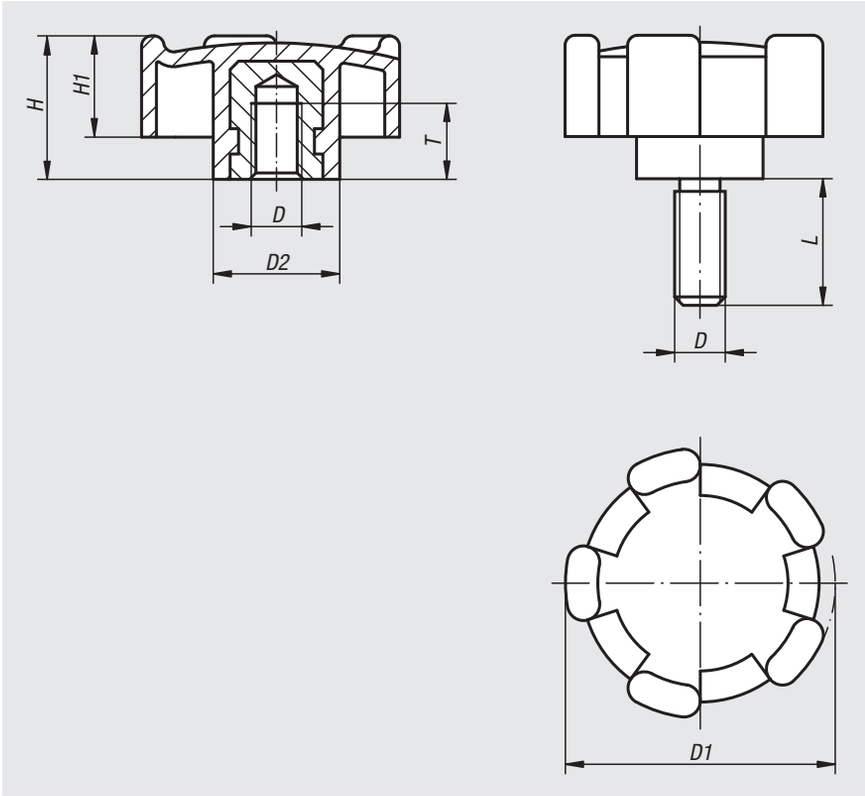

Material:
Grip black grey thermoplastic.
Bush steel or brass.
Screw 5.8 steel.

Version:
Steel bush galvanized.
Screw blue passivated.

Sample order:
nlm 06853-3206

Note:
The version 06853-3206 has a brass bush.

Five lobe grips with internal thread

Order No.	Size	D	D1	D2	H	H1	T
06853-3206	1	M6	32	15	17	12	9
06853-4008	2	M8	40	18	20,5	14,5	11
06853-5010	3	M10	50	20	25	18	14

Five lobe grips with external thread

Order No.	Size	D	D1	D2	H	H1	L
06853-320615	1	M6	32	15	17	12	15
06853-400816	2	M8	40	18	20,5	14,5	16
06853-501020	3	M10	50	20	25	18	20

06895

Pull handles

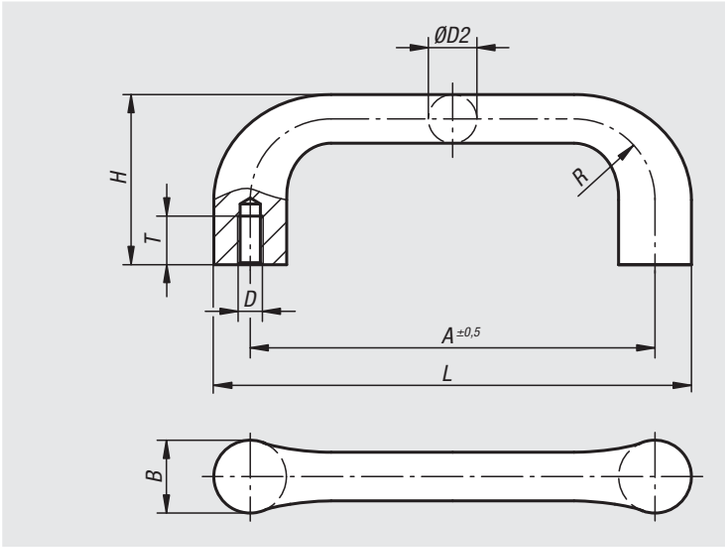

Material:
GJS 400

Version:
Vibratory ground.
Black plastic-coated.
Contact surfaces machined.

Sample order:
nlm 06895-12510

Assembly:
From the rear.

Order No. bright	Order No. black	A	B	D	D2	H	L	R	T	Load capacity N
06895-10006	**06895-100061**	100	18	M6	12	42	118	20	12	1000
06895-11208	**06895-112081**	112	20	M8	14	47	132	22	15	1000
06895-12510	**06895-125101**	125	22	M10	16	53	147	24	18	1000
06895-14012	**06895-140121**	140	25	M12	18	59	165	26	20	1000

06900

Pull handles

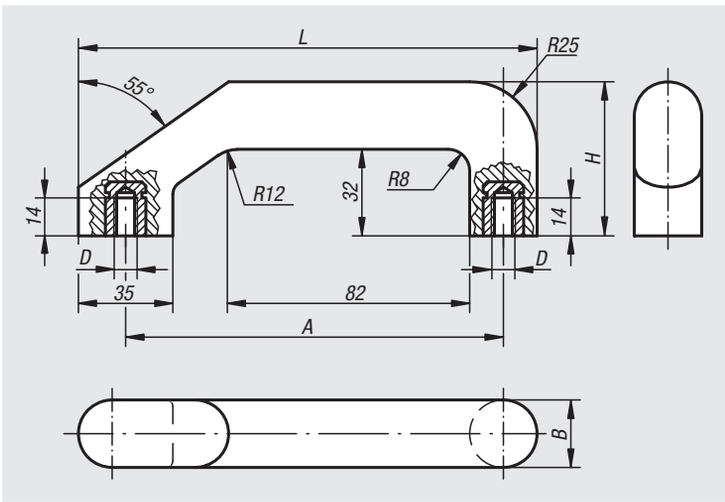

Material:
Duroplast PF 31, black.
Bushing brass or galvanized steel.

Version:
High-gloss polished.

Sample order:
nlm 06900-101

Assembly:
From the rear.

Order No.	Bushing	A	B	D	H	L	Load capacity N
06900-101	brass	140	25	M8	57	170	300
06900-201	steel	140	25	M8	57	170	300

Pull handles

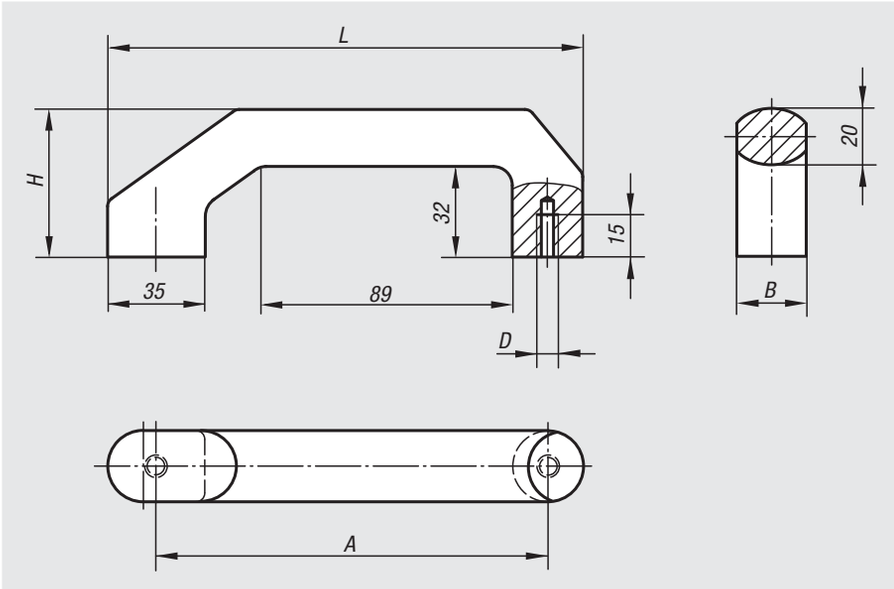

Material:
Die-cast aluminium EN AW-5754.

Version:
Surface tumbled and black powder-coated or left bright.

Sample order:
nlm 06900-140066

Assembly:
From the rear.

Order No.	Main colour	A	B	D	H	L	Load capacity N
06900-140066	black	140	25	M6	52	170	1000
06900-140067	bright	140	25	M6	52	170	1000

Pull handles

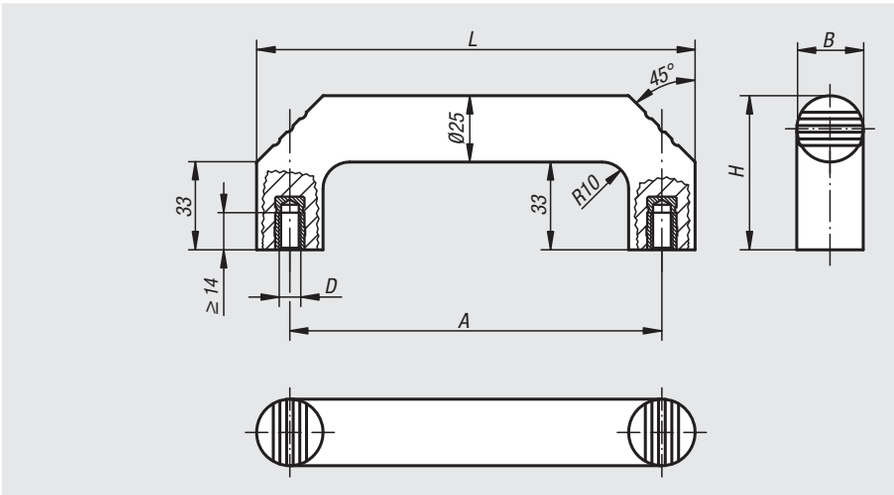

Material:
Duroplast PF 31, black.
Bushing brass or galvanized steel.

Version:
High-gloss polished.

Sample order:
nlm 06901-114008

Assembly:
From the rear.

Order No.	Bushing	A	B	D	H	L	Load capacity N
06901-114008	brass	140	25	M8	58	165	500
06901-214008	steel	140	25	M8	58	165	500

Pull handles

Material:
Thermoplastic.
Bushing brass.

Version:
Handle and cap black.

Sample order:
nlm 06902-109406

Assembly:
Form A from the rear.
Form B from the front.

On request:
Other handle or cap colours.

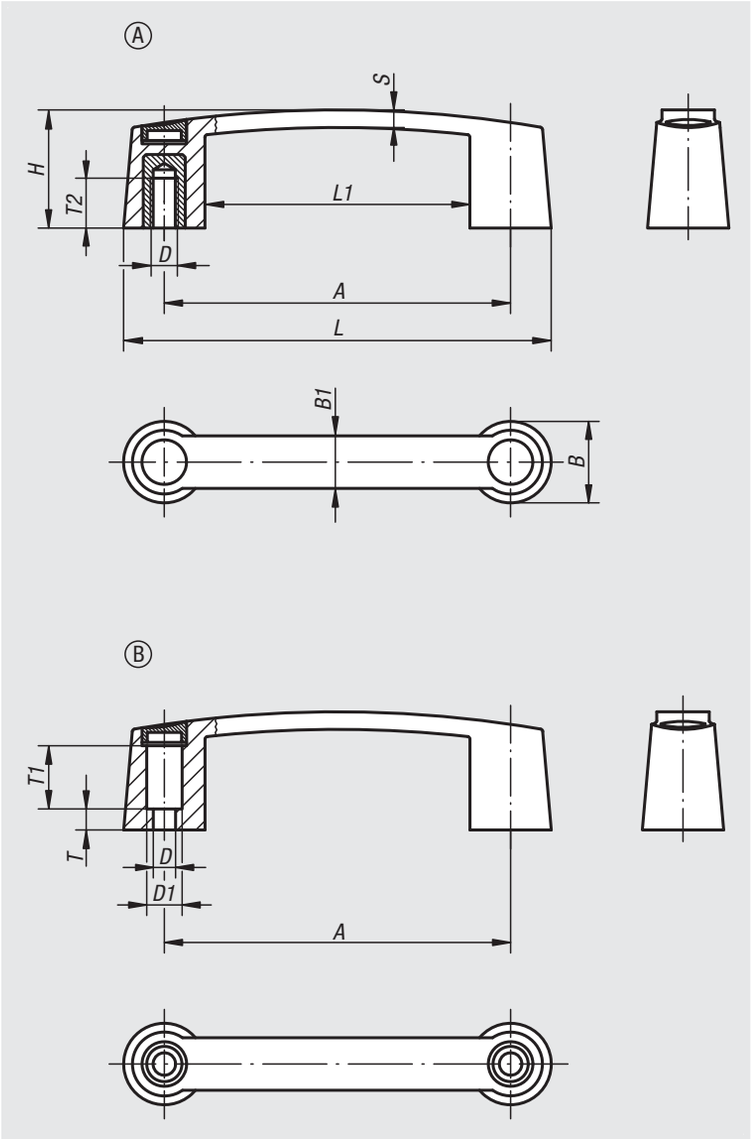

Order No.	Form	A	B	B1	D	D1	H	L	L1	S	T	T1	T2	Load capacity N
06902-109406	A	93,5	26	17	M6	-	35	119,5	67,5	5,8	-	-	15,5	320
06902-111706	A	117	29	19	M6	-	40	145	89	6,4	-	-	15,5	320
06902-111708	A	117	29	19	M8	-	40	145	89	6,4	-	-	16	870
06902-113206	A	132	31	20	M6	-	45	163	101	6,7	-	-	15,5	320
06902-113208	A	132	31	20	M8	-	45	163	101	6,7	-	-	16	870
06902-117910	A	179	35	22	M10	-	50	213	145	7,1	-	-	22	1200
06902-209406	B	93,5	26	17	6,8	12	35	119,5	67,5	5,8	4,5	19	-	500
06902-211708	B	117	29	19	8,5	13,5	40	145	89	6,4	8	23	-	950
06902-213208	B	132	31	20	8,5	13,5	45	163	101	6,7	8	22	-	950
06902-217908	B	179	35	22	8,5	13,5	50	213	145	7,1	12	22	-	950

Pull handles

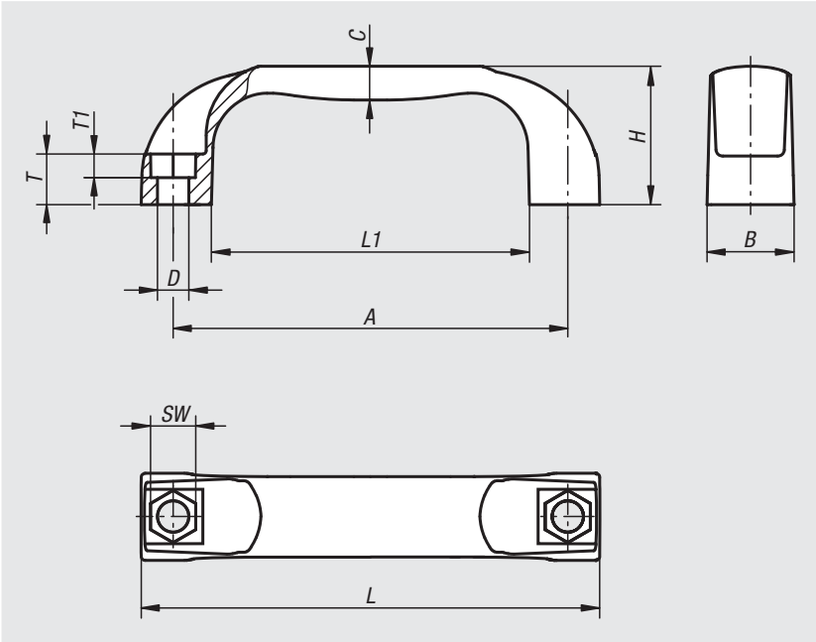

Material:
Thermoplast PA (polyamide), glass-bead reinforced or PP (polypropylene), fibreglass reinforced.

Version:
black grey

Sample order:
nlm 06903-113208

Note:
The fastening hole is designed to accept the head of a socket or hexagon head bolt or a hexagon nut.

Assembly:
From the front or rear.

On request:
Other handle colours.

Order No.	Main material	A	B	C	D	H	L	L1	SW	T	T1	Load capacity N
06903-109406	polyamide	94	21	8	6,6	36	109	76	10	13	6	1000
06903-111708	polyamide	117	26	10	9	41	136	94	13	15	8	1500
06903-113208	polyamide	132	27	11	9	44	154	112	13	16	8	1500
06903-117908	polyamide	179	28	11	9	50	197	156	13	17	8	1500
06903-209406	polypropylene	94	21	8	6,6	36	109	76	10	13	6	500
06903-211708	polypropylene	117	26	10	9	41	136	94	13	15	8	800
06903-213208	polypropylene	132	27	11	9	44	154	112	13	16	8	800
06903-217908	polypropylene	179	28	11	9	50	197	156	13	17	8	800

Pull handles

high temperature resistant

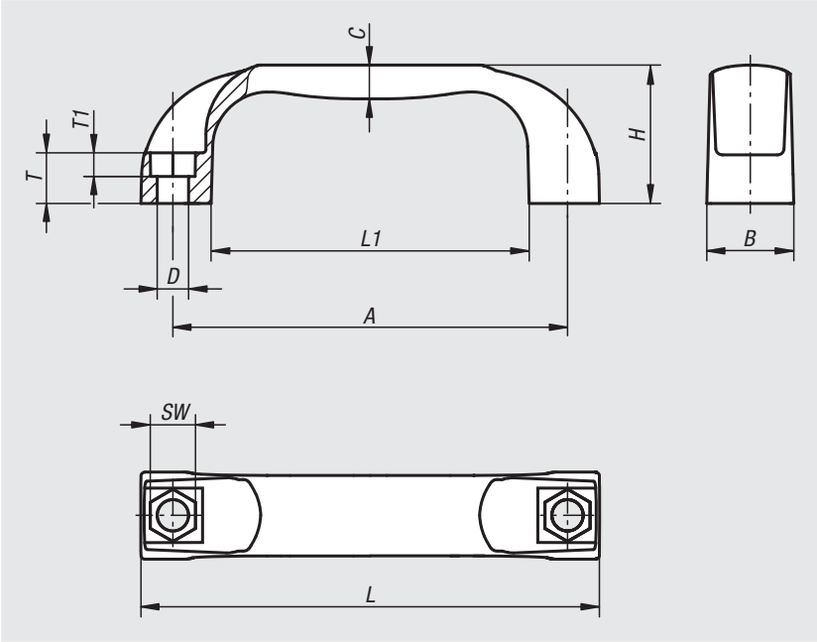

Material:
Thermoplastic PPA (resistant to high temperatures), fibreglass reinforced.

Version:
black.

Sample order:
nlm 06903-311708

Note:
The fastening hole is designed to accept the head of a socket or hexagon head bolt or a hexagon nut.

Temperature range:
Continuous operating temperature acc. to IEC 216 max. 150°C - 160°C.
Temporary operating temperature max. 250°C.

Assembly:
From the front or rear.

Order No.	A	B	C	D	H	L	L1	SW	T	T1	Load capacity N
06903-311708	117	26	10	9	41	136	94	13	15	8	1500
06903-313208	132	27	11	9	44	154	112	13	16	8	1500

Pull handles antistatic

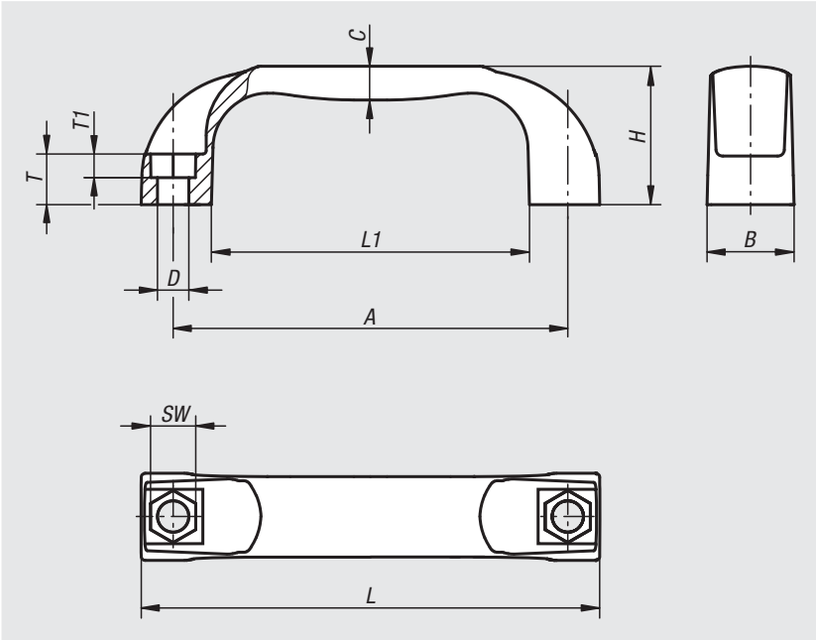

Material:
Thermoplastic PA (polyamide) reinforced.

Version:
graphite black.

Sample order:
nlm 06903-111170824

Application:
Sensitive electrical or electronic equipment, components and devices (ESD sensitive elements) may be damaged or destroyed by electrostatic discharges (ESD) in the immediate vicinity. Electrostatic discharges can come from people or through handling ESD sensitive components (e.g. during production, assembly, transport, storage etc).
Electrically conductive products which conform to DIN EN 61340-5-1 are essential within electronic environments to prevent an electrostatic discharge.
These products can be used for ESD applications or in ESD protection areas (EPA) in accordance with DIN EN 61340-5-1.
The yellow ESD logo is printed on the side of the product to clearly identify it.

Safety:
These ESD products can also be used for devices, components and protection systems in areas with high risk of explosion.
Use of these ESD products prevents the occurrence of electrostatic spark discharges, eliminating the potential ignition of gases and dusts which could lead to explosions in enclosed spaces.
Manufacturers and operators must use and conform to ATEX directives for the protection of persons working in areas with high risk of explosion.
These ESD products are certified by TÜV-Süd in relation to their electrical discharge capability.

Target groups:
Device manufacturers required to conform to ATEX product directive 2014/34/EU.
Operators required to conform to ATEX worker protection directive 1999/92/EC.

Order No.	Main colour	A	B	C	D	H	L	L1	SW	T	T1	Load capacity N
06903-111170824	graphite black RAL 9011	117	26	10	9	41	136	94	13	15	8	1000

Pull handles

Material:
Glass bead reinforced thermoplastic

Version:
Matt black or orange

Sample order:
nlm 06904-1120081

Note:
Dimension “A” applies after mounting. Before mounting it can be up to 2 mm smaller due to the release of the bending stress.

Assembly:
From the front.

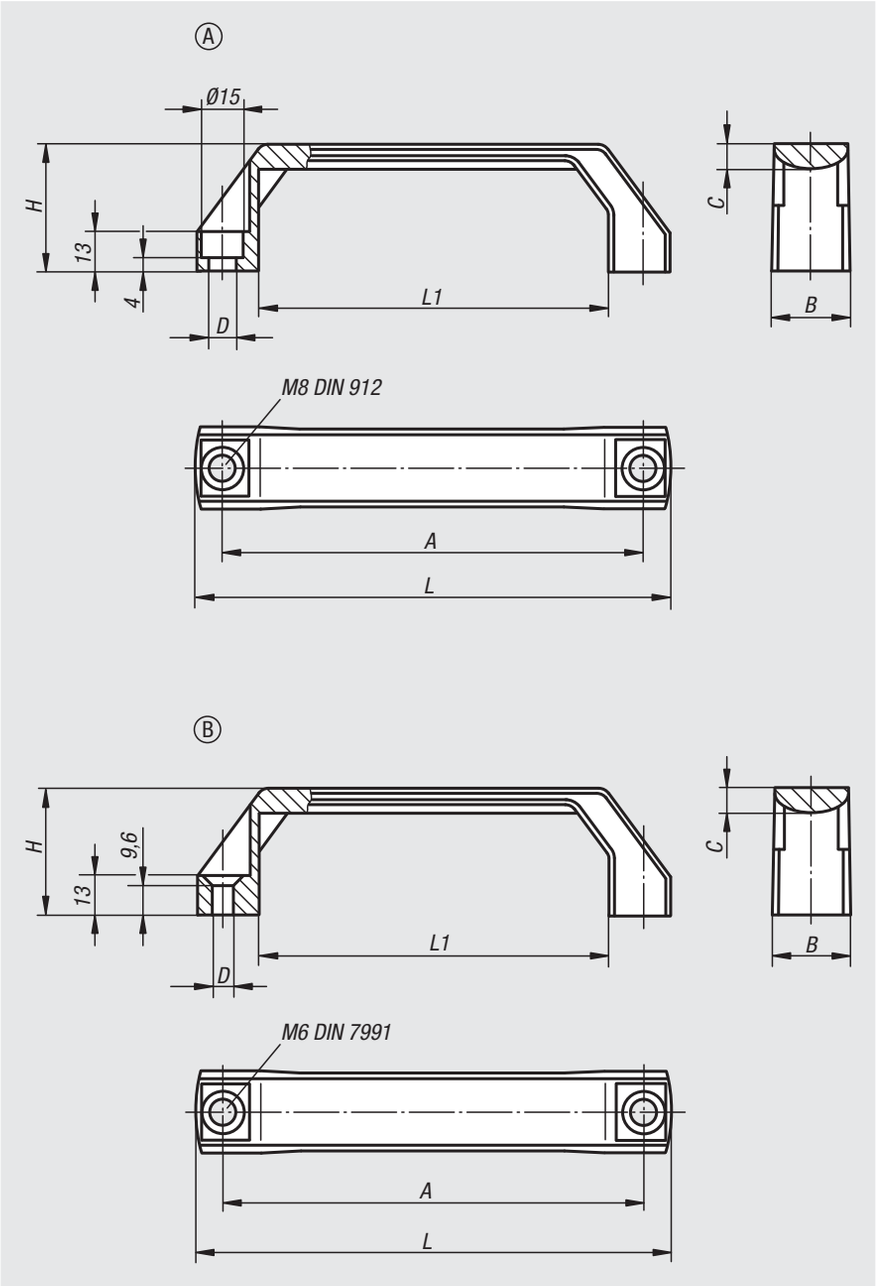

Order No. black grey RAL 7021	Order No. orange	Form	A	B	C	D	H	L	L1	Load capacity N
06904-1120081	06904-1120082	A	120	26	8	9	42	138	96	1000
06904-1140081	06904-1140082	A	140	26	8	9	42	158	116	1000
06904-1160081	06904-1160082	A	160	28	9	9	45	178	136	1000
06904-2120061	06904-2120062	B	120	26	8	6,6	42	138	96	1000
06904-2140061	06904-2140062	B	140	26	8	6,6	42	158	116	1000
06904-2160061	06904-2160062	B	160	28	9	6,6	45	178	136	1000

Pull handles arch

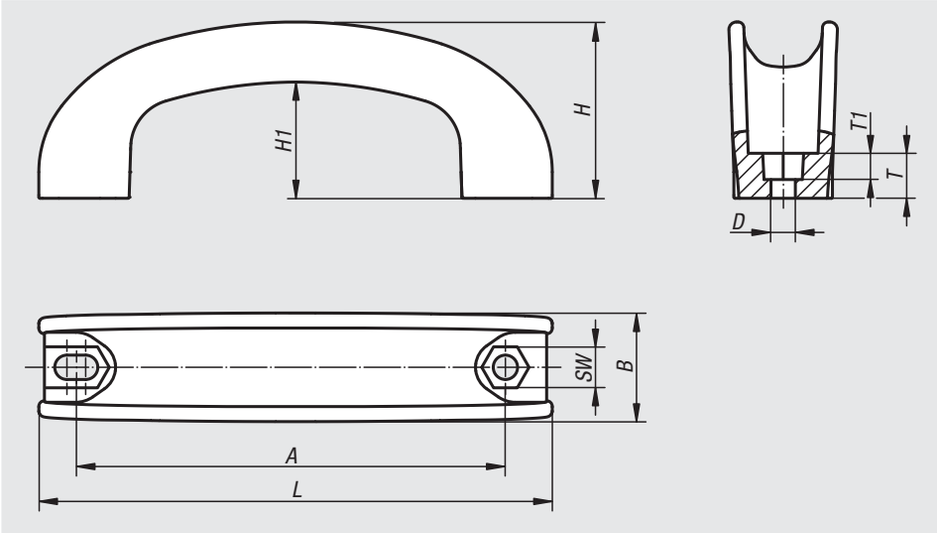

Material:
Black thermoplastic.

Sample order:
nlm 06907-09006

Assembly:
From the front.

Order No.	A	B	D	H	H1	L	T	T1	SW	Load capacity N
06907-09006	90-95	26,6	6,5	42	29	115	10	6,4	10,2	1000
06907-11206	112-117	29	6,5	47	31	137	12	7	10,2	1000
06907-17708	177-182	30	8,5	48,1	31	208	14	9	13,2	1000

Notes

06909

Pull handles arch

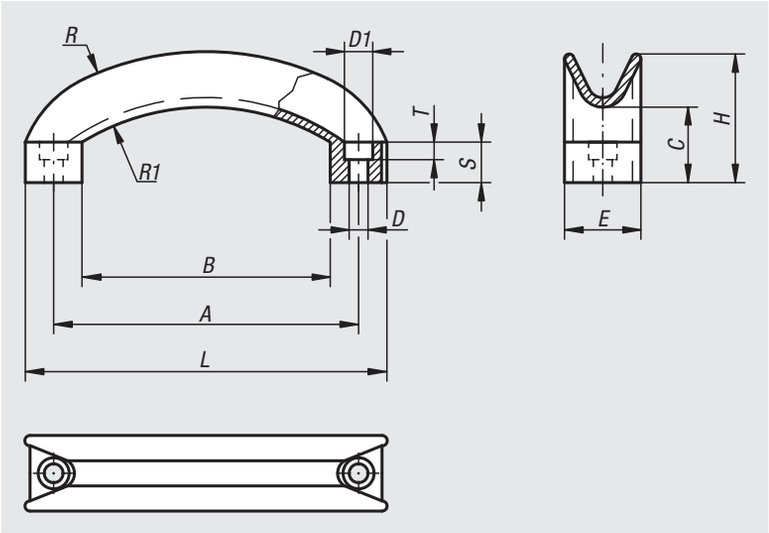

Material:
Black grey thermoplastic.

Sample order:
nlm 06909-11406

Assembly:
From the front.

Order No.	D	D1	A	B	C	E	H	L	R	R1	S	T	Load capacity N
06909-11406	6,5	10,5	114	92	29	28	48	134	117	79	15	6,5	1000

06910

Pull handles

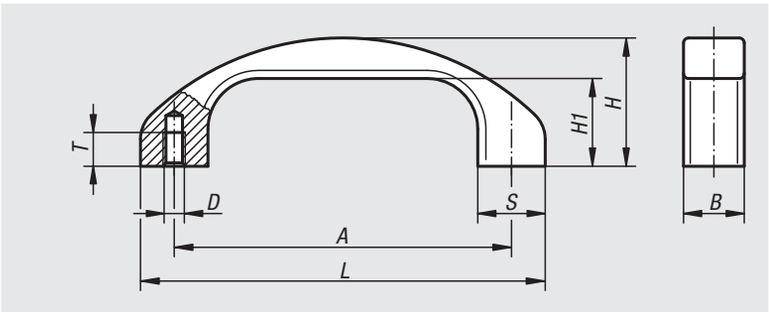

Material:
Profile aluminium EN AW-6060

Version:
High quality anodized version, glass-bead blasted, semi-gloss finish.

Sample order:
nlm 06910-120061

Assembly:
From the rear.

Order No.	Main colour	A	B	D	H	H1	L	S	T	Load capacity N
06910-120061	black anodized	120	22	M6	46	31	144	24	12	1000
06910-140081	black anodized	140	25	M8	53	36	168	28	15	1000
06910-120063	natural anodized	120	22	M6	46	31	144	24	12	1000
06910-140083	natural anodized	140	25	M8	53	36	168	28	15	1000

Pull handles arch

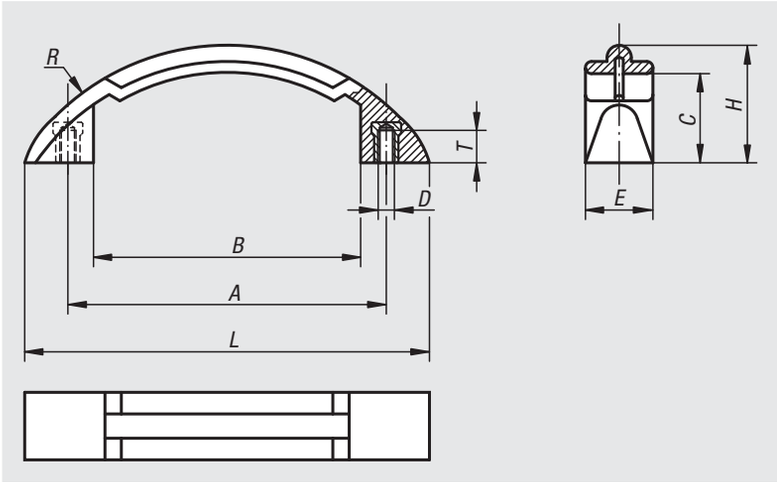

Material:
Thermoplastic, black grey.
Bushes galvanized steel.

Sample order:
nlm 06911-11906

Assembly:
From the rear.

Order No.	D	A	B	C	E	H	L	R	T	Load capacity N
06911-11906	M6	119	98	33	25	43,5	150	94	10	1000

Pull handles

oblique

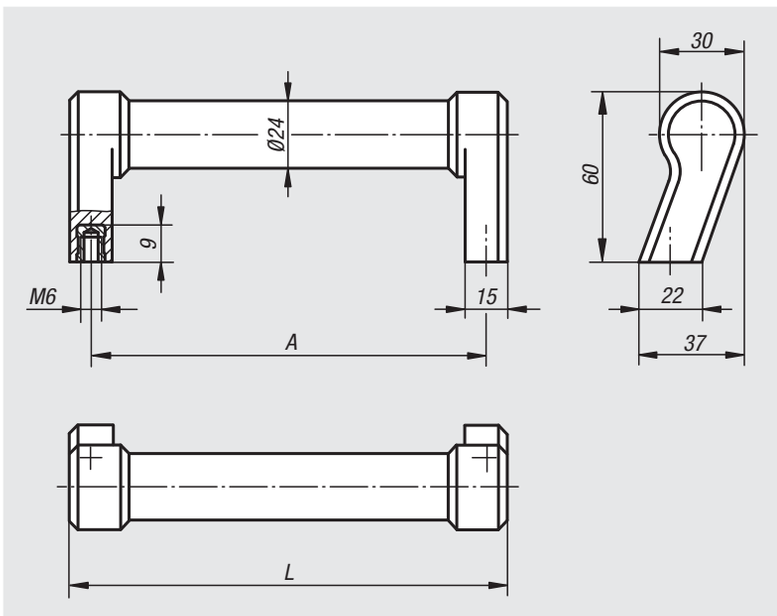

Material:
Grip glass-bead reinforced thermoplastic.
Bushing brass.

Version:
Matt black or light grey

Sample order:
nlm 06912-140061

Note:
Oblique, robust polyamide handle. Tube and legs form one unit. The oblique contact faces allow mounting under cramped conditions e.g. in corners.

Assembly:
From the rear.

Order No.	Main colour	A	L	Load capacity N
06912-140061	black grey RAL 7021	140	155	1000
06912-140062	light grey RAL 7035	140	155	1000

Pull handles

with soft inner face

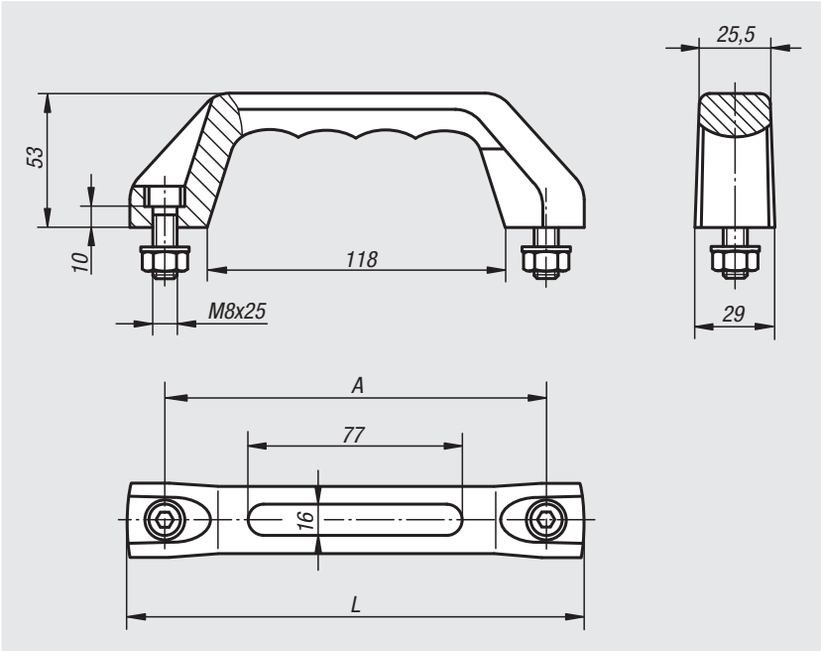

Material:
Hard components glass-bead reinforced thermoplastic.
Soft components SEBS

Version:
Hard component matt black, soft component basalt grey.

Sample order:
nlm 06913-515008

Note:
Heavy-duty polyamide handle. Excellent carrying and gripping comfort thanks to its soft inner surface.
Black galvanized cap screws, nuts and washers are supplied.
For wet areas, the fastening material is supplied in stainless steel (1.4301).

Assembly:
From the front.

On request:
With individual caption, embossed or raised on the soft material. Hard and soft components are available in all RAL colours.

Order No.	Version	A	L	Load capacity N
06913-515008	-	150	178	500
06913-615008	wet area	150	178	500

06914

Pull handles stainless steel

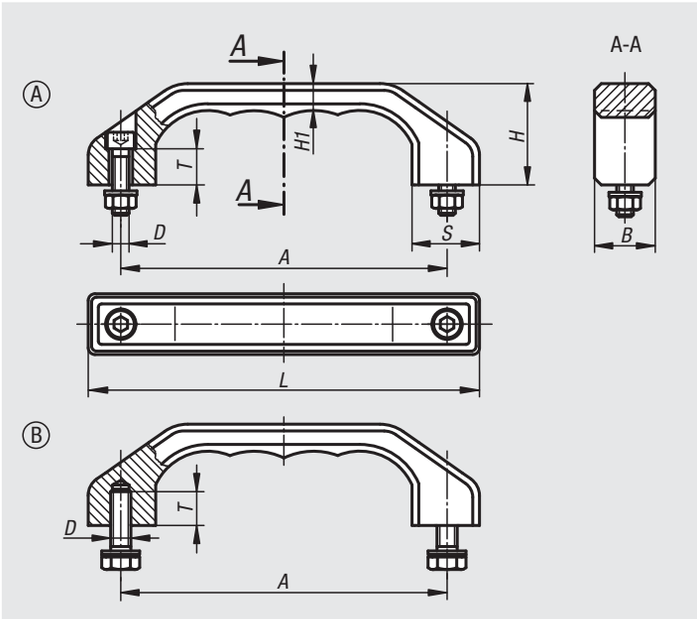

Material:
Investment cast stainless steel 1.4308.
Fasteners made of 1.4301.

Version:
Abrasive cleaned and matt gloss electropolished.

Sample order:
nlm 06914-140081

Assembly:
Form A from the front.
Form B from the rear.

Order No.	Form	A	B	D	H	H1	L	S	T	Load capacity N
06914-140081	A	140	25	M8x30	45	12	170	28	15	1000
06914-180101	A	180	32	M10x40	58	15	218	36	18	1000
06914-140082	B	140	25	M8x18	45	12	170	28	15	1000
06914-180102	B	180	32	M10x20	58	15	218	36	18	1000

06915

Pull handles

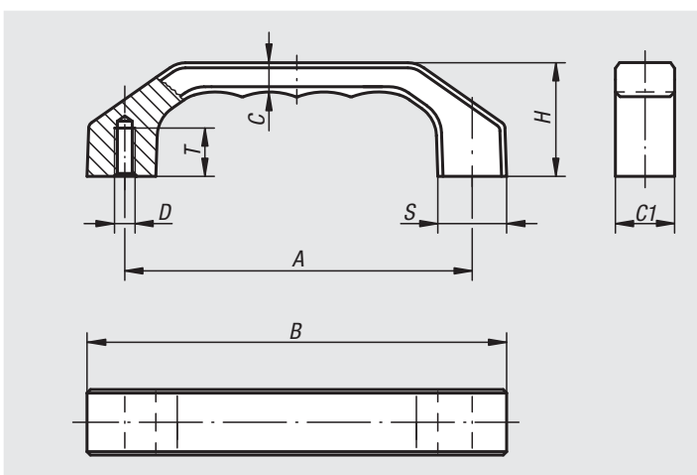

Material:
EN AW-6060

Version:
Matt-finished and anodized or powder-coated

Sample order:
nlm 06915-140082

Assembly:
From the rear.

Order No. natural anodized	Order No. black anodized	Order No. titanium tone powder coated	A	B	C	C1	D	H	S	T	Load capacity N
06915-120061	**06915-120062**	**06915-120063**	120	146	10,5	22	M6	39	24	15	1000
06915-140081	**06915-140082**	**06915-140083**	140	170	12	25	M8	45	28	16	1000
06915-160081	**06915-160082**	**06915-160083**	160	194	13,5	28	M8	52	32	16	1000

Pull handles

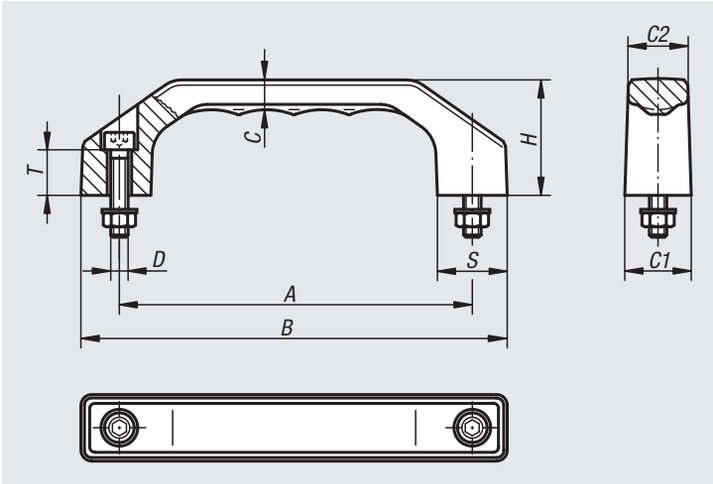

Material:
Glass bead reinforced thermoplastic

Version:
Matt black with fine texture.

Sample order:
nlm 06916-140082

Note:
These handles are extremely flex-resistant and are very user friendly. Fastening screws, nuts and washers are supplied. Stainless steel fasteners are supplied for wet areas.

Assembly:
From the front.

Order No. -	Order No. wet area	A	B	C	C1	C2	D	H	S	T	Load capacity N
06916-100051	**06916-100052**	100	122	8,5	19	17	M5x22	35	20	13	1000
06916-120061	**06916-120062**	120	146	10,5	23	20,5	M6X25	39	24	15	1000
06916-140081	**06916-140082**	140	170	12	27	24	M8x30	45	28	16	1000
06916-160081	**06916-160082**	160	194	13,5	31	27,5	M8x35	52	32	20	1000
06916-180081	**06916-180082**	180	218	15,5	35	31	M10x40	58	36	20	1000

Pull handles

Material:
Thermoplastic PA (polyamide), glass-bead reinforced.
Bush, screw, washer and nut steel or stainless steel.

Version:
black grey

Sample order:
nlm 06916-01-1100051

Note:
This pull handle is characterised by its large size and pleasant haptics.

Form A is supplied with fastening screws, washers and nuts.

Assembly:
Form A from the front.
Form B from the rear.

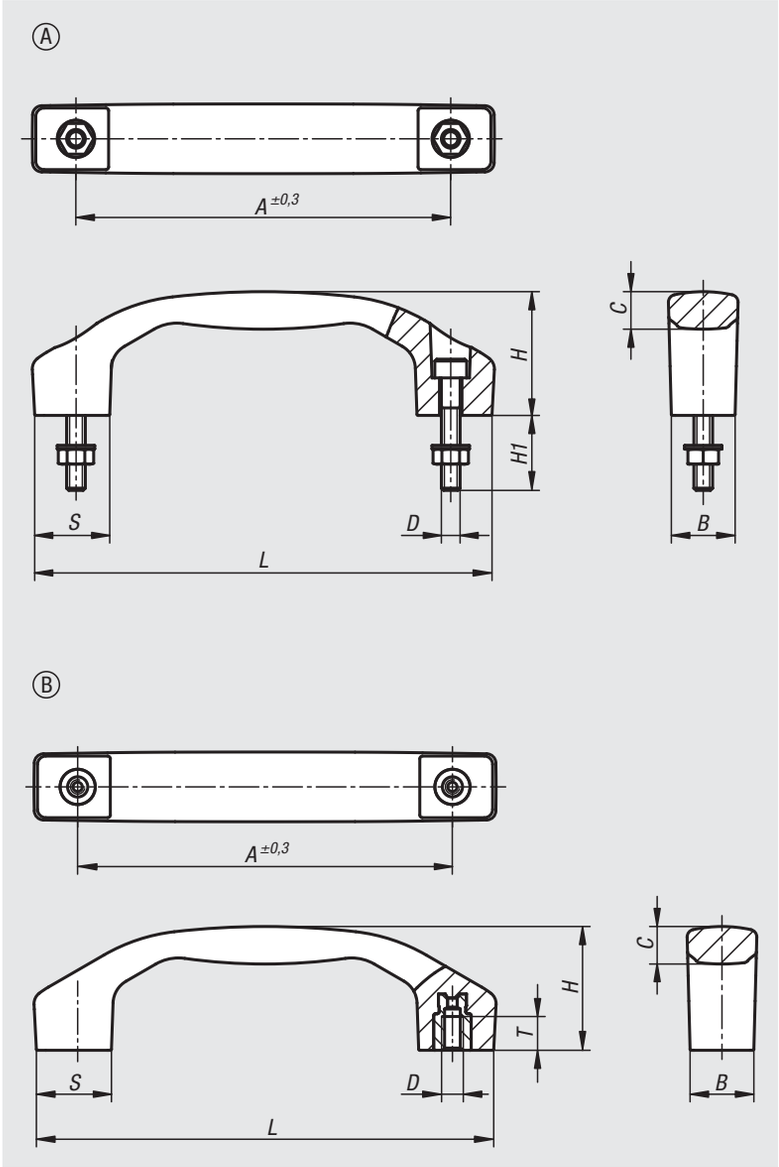

Order No.	Form	Component material	A	B	C	D	H	H1	L	S	T	Load capacity N
06916-01-1100051	A	steel	100	17	9,5	M5	33	20	122	20	-	1000
06916-01-1120061	A	steel	120	21	11,4	M6	39	25	146	24	-	1000
06916-01-1140081	A	steel	140	24	14,2	M8	45	30	170	28	-	1000
06916-01-1100052	A	stainless steel	100	17	9,5	M5	33	20	122	20	-	1000
06916-01-1120062	A	stainless steel	120	21	11,4	M6	39	25	146	24	-	1000
06916-01-1140082	A	stainless steel	140	24	14,2	M8	45	30	170	28	-	1000
06916-01-2100051	B	steel	100	17	9,5	M5	33	-	122	20	9	1000
06916-01-2120061	B	steel	120	21	11,4	M6	39	-	146	24	12	1000
06916-01-2140081	B	steel	140	24	14,2	M8	45	-	170	28	12	1000
06916-01-2100052	B	stainless steel	100	17	9,5	M5	33	-	122	20	9	1000
06916-01-2120062	B	stainless steel	120	21	11,4	M6	39	-	146	24	12	1000
06916-01-2140082	B	stainless steel	140	24	14,2	M8	45	-	170	28	12	1000

Pull handles

high temperature resistant

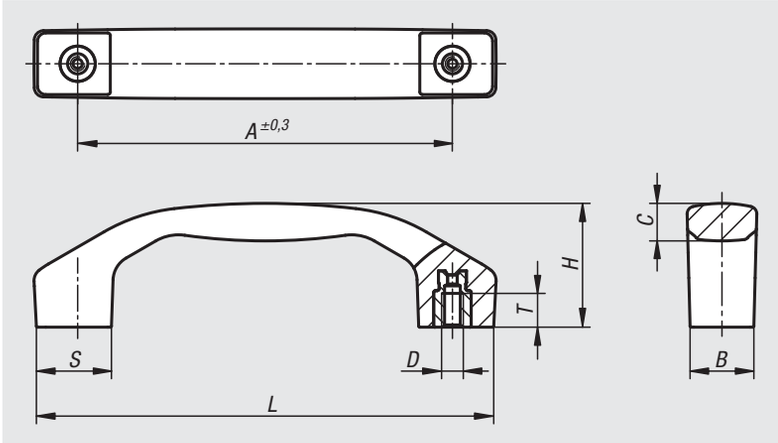

Material:
Thermoplastic PPA (resistant to high temperatures), fibreglass reinforced.
Bush, stainless steel.

Version:
black.

Sample order:
nlm 06916-01-2100054

Note:
This pull handle is characterised by its large size and pleasant haptics.
Easy to clean due to its closed, smooth design (suitable for e.g. foodstuff production and medical technology).

Temperature range:
Continuous operating temperature acc. to IEC 216 max. 160 °C.
Short-term operating temperature: max. 250 °C.
Suitable for steam sterilisation (medical technology).

Assembly:
From the rear.

Order No.	Form	A	B	C	D	H	L	S	T	Load capacity N
06916-01-2100054	B	100	17	10,3	M5	34	122,5	20	9	1000
06916-01-2120064	B	120	21	12,4	M6	41	146	24	12	1000
06916-01-2140084	B	140	24	15,4	M8	46,5	170	28	12	1000

Pull handles round

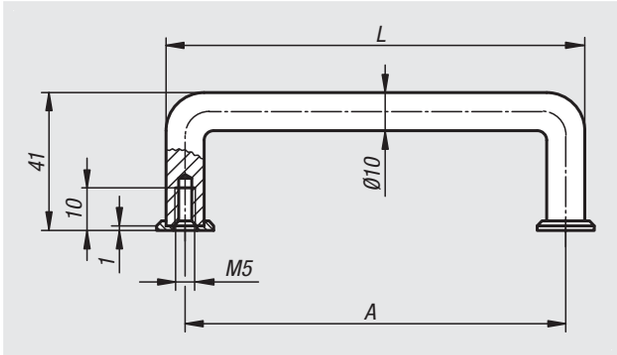

Material:
Round aluminium

Version:
Surface matt-finished and natural colour or black anodized

Sample order:
nlm 06917-055051

Note:
End washers not included.

Assembly:
From the rear.

Order No.	Main colour	A	L	Load capacity N	Order No. end washer
06917-055051	black anodized	55	65	500	06917-1
06917-088051	black anodized	88	98	500	06917-1
06917-100051	black anodized	100	110	500	06917-1
06917-120051	black anodized	120	130	500	06917-1
06917-180051	black anodized	180	190	500	06917-1
06917-200051	black anodized	200	210	500	06917-1
06917-235051	black anodized	235	245	500	06917-1
06917-250051	black anodized	250	260	500	06917-1
06917-055053	natural anodized	55	65	500	06917-3
06917-088053	natural anodized	88	98	500	06917-3
06917-100053	natural anodized	100	110	500	06917-3
06917-120053	natural anodized	120	130	500	06917-3
06917-180053	natural anodized	180	190	500	06917-3
06917-200053	natural anodized	200	210	500	06917-3
06917-235053	natural anodized	235	245	500	06917-3
06917-250053	natural anodized	250	260	500	06917-3

Pull handles oval

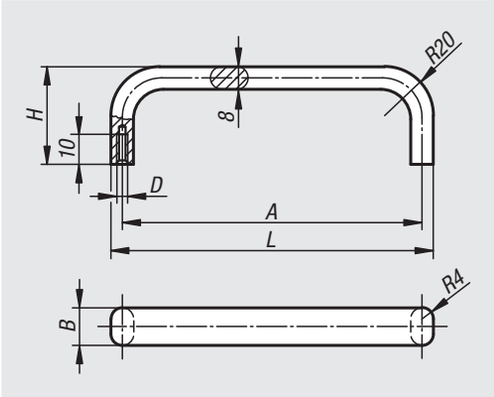

Material:
Oval aluminium

Version:
Surface matt-finished and natural colour anodized or black anodized

Sample order:
nlm 06918-055051

Assembly:
From the rear.

Order No. black anodized	Order No. natural colour anodized	A	B	D	H	L	Load capacity N
06918-055051	**06918-055053**	55	12	M5	40	63	500
06918-088051	**06918-088053**	88	12	M5	40	96	500
06918-100051	**06918-100053**	100	12	M5	40	108	500
06918-120051	**06918-120053**	120	12	M5	40	128	500
06918-180051	**06918-180053**	180	12	M5	40	188	500
06918-200051	**06918-200053**	200	12	M5	40	208	500
06918-235051	**06918-235053**	235	12	M5	40	243	500
06918-250051	**06918-250053**	250	12	M5	40	258	500

Pull handles round

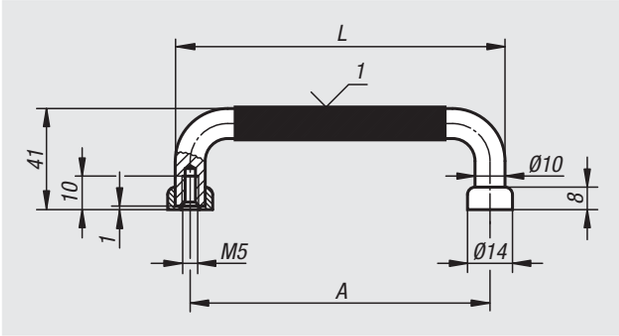

Material:
Round steel

Version:
Surface very finely ground and matt-polish chrome-plated.
Grip plastic coated.

Sample order:
nlm 06919-05505

Note:
High quality handles for front panels and similar applications.

Assembly:
From the rear.

Drawing reference:
1) plastic coating

Order No.	A	L	Load capacity N
06919-05505	55	65	1000
06919-08805	88	98	1000
06919-10005	100	110	1000
06919-10205	102	112	1000
06919-11505	115	125	1000
06919-12005	120	130	1000
06919-13605	136	146	1000
06919-18005	180	190	1000
06919-20005	200	210	1000
06919-23505	235	245	1000
06919-25005	250	260	1000

Pull handles oval

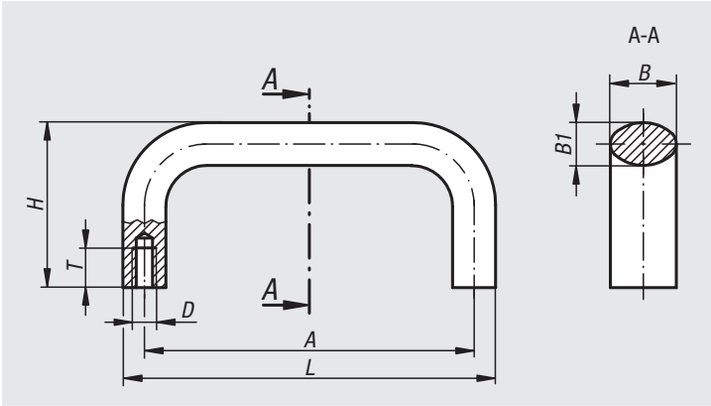

Material:
Oval aluminium EN AW-6060

Version:
Black or ruby red RAL 3003 powder-coated or natural colour anodized.

Sample order:
nlm 06920-10001

Note:
These handles are extremely robust and can be used where heavy duty equipment is called for.

Assembly:
From the rear.

Order No. black powder-coated	Order No. natural anodized	Order No. red RAL3003 powder-coated	A	B	B1	D	H	T	L	Load capacity N
06920-10001	06920-10003	06920-10027	100	21/20/21	13	M6	50	12	113	1000
06920-11201	06920-11203	06920-11227	112	21/20/21	13	M6	50	12	125	1000
06920-1120108	06920-1120308	06920-1122708	112	25/26/25	17	M8	55	14	129	1000
06920-12001	06920-12003	06920-12027	120	21/20/21	13	M6	50	12	133	1000
06920-1200108	06920-1200308	06920-1202708	120	25/26/25	17	M8	55	14	137	1000
06920-12801	06920-12803	06920-12827	128	21/20/21	13	M6	50	12	141	1000
06920-1280108	06920-1280308	06920-1282708	128	25/26/25	17	M8	55	14	145	1000
06920-1600106	06920-1600306	06920-1602706	160	21/20/21	13	M6	50	12	173	1000
06920-16001	06920-16003	06920-16027	160	25/26/25	17	M8	55	14	177	1000
06920-18001	06920-18003	06920-18027	180	25/26/25	17	M8	55	14	197	1000
06920-19201	06920-19203	06920-19227	192	25/26/25	17	M8	55	14	209	1000
06920-35001	06920-35003	06920-35027	350	25/26/25	17	M8	55	14	367	1000

Pull handles oval

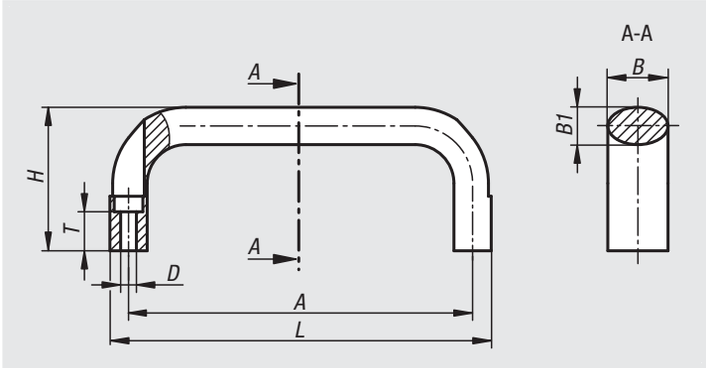

Material:
Oval aluminium EN AW-6060

Version:
Black or ruby red RAL 3003, powder-coated.

Sample order:
nlm 06920-11000105

Assembly:
From the front.

Accessories:
Suitable screws for mounting the handles:
ISO 4762-M5/M6 cap screws.

Order No. black powder-coated	Order No. red RAL3003 powder-coated	A	B	B1	D	H	L	T	Load capacity N
06920-11000105	**06920-11002705**	100	21	13	5,5	50	113	13,6	1000
06920-11120105	**06920-11122705**	112	21	13	5,5	50	125	13,6	1000
06920-11120106	**06920-11122706**	112	25	17	6,6	55	129	11	1000
06920-11200105	**06920-11202705**	120	21	13	5,5	50	133	13,6	1000
06920-11200106	**06920-11202706**	120	25	17	6,6	55	137	11	1000
06920-11280105	**06920-11282705**	128	21	13	5,5	50	141	13,6	1000
06920-11280106	**06920-11282706**	128	25	17	6,6	55	145	11	1000
06920-11600105	**06920-11602705**	160	21	13	5,5	50	173	13,6	1000
06920-11600106	**06920-11602706**	160	25	17	6,6	55	177	11	1000
06920-11800106	**06920-11802706**	180	25	17	6,6	55	197	11	1000

Pull handles oval

detachable

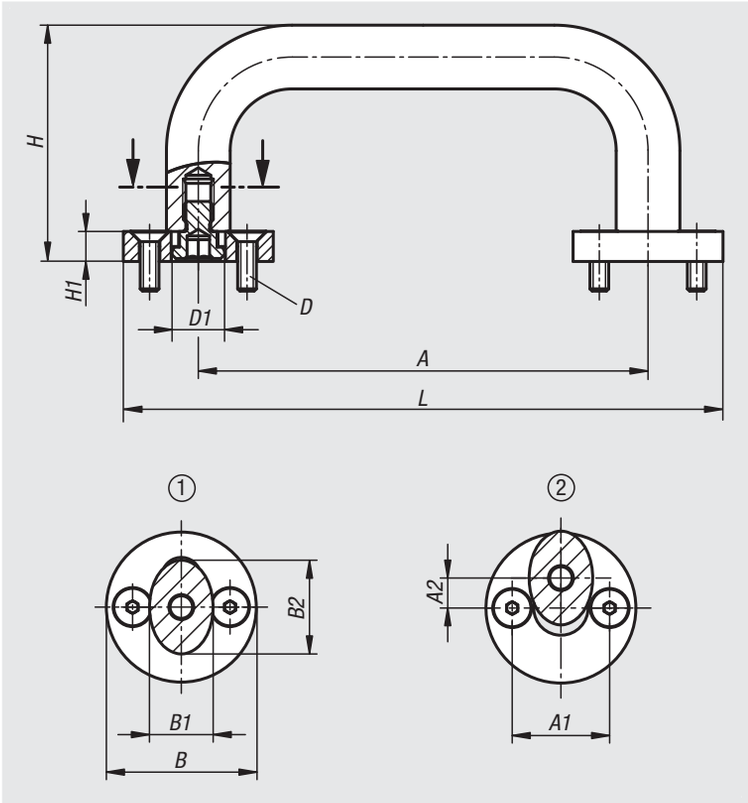

Material:
Pull handle oval aluminium EN AW-6060.
Locating pin free-cutting steel 1.0718.
Blanking disc free-cutting steel 1.0718.

Version:
Pull handle black powder-coated.
Locating pin black oxidised.
Blanking disc black oxidised.

Sample order:
nlm 06920-10012001

Note:
The pull handles are mounted on an object by a push-fit system.
Dismantling is carried out when no load is applied.

Order No.	A	A1	A2	B	B1	B2	D	D1	H	H1	L	Load capacity N
06920-10012001	100	24	7	35	13	21	M5x16	12	58	8	135	1000
06920-11212001	112	24	7	35	13	21	M5x16	12	58	8	147	1000
06920-11214001	112	26	8	40	15	25	M5x16	14	63	8	152	1000
06920-12012001	120	24	7	35	13	21	M5x16	12	58	8	155	1000
06920-12014001	120	26	8	40	17	25	M5x16	14	63	8	160	1000
06920-12812001	128	24	7	35	13	21	M5x16	12	58	8	163	1000
06920-12814001	128	26	8	40	17	25	M5x16	14	63	8	168	1000
06920-16012001	160	24	7	35	13	21	M5x16	12	58	8	195	1000
06920-16014001	160	26	8	40	17	25	M5x16	14	63	8	200	1000
06920-18014001	180	26	8	40	17	25	M5x16	14	63	8	220	1000
06920-19214001	192	26	8	40	17	25	M5x16	14	63	8	232	1000
06920-35014001	350	26	8	40	17	25	M5x16	14	63	8	390	1000

Pull handles oval

detachable

Application:
Insert the pull handle into the opening until the grip makes contact with the blanking disc.
Lock by holding the handle parallel and pulling up.
The grip can only be subject to vertical loads.
To release, follow the previous instructions in reverse.

Assembly:
An object must be prepared before the blanking disc can be mounted.
See mounting instructions drawing.

Drawing reference:
1) Position disengaged
2) Position engaged

S = insert
E = engage
A = lift

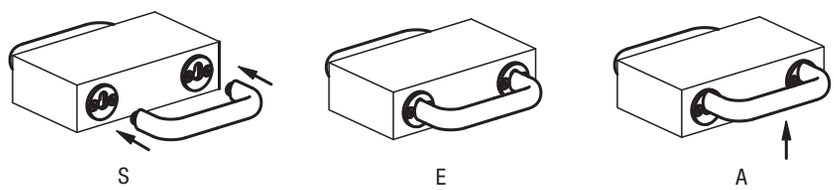

mounting instructions:

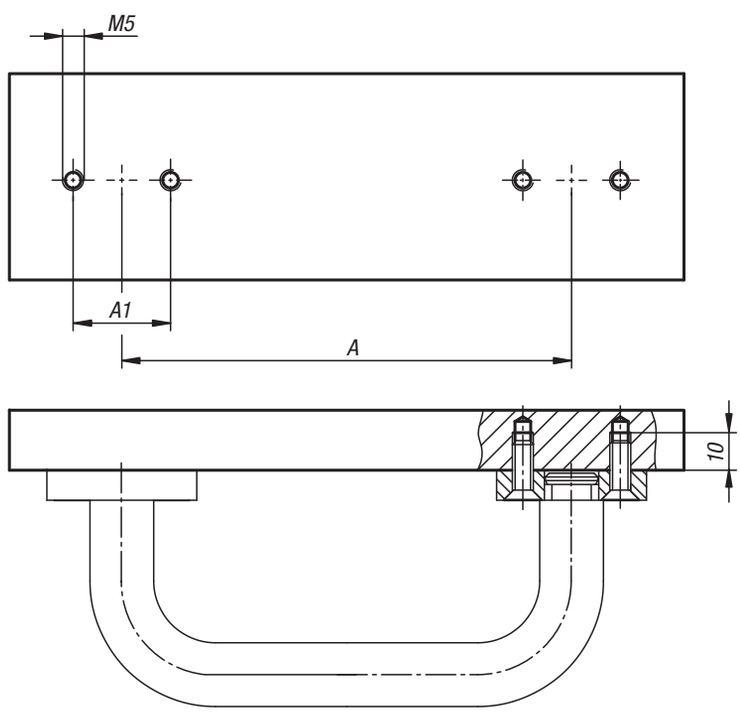

06921

Pull handles

Material:
Profile aluminium EN AW-6060

Version:
Matt-finished, black or natural colour anodized

Sample order:
nlm 06921-18001

Note:
These elegant flat profile aluminium handles are especially suitable for machines, fixtures, equipment etc.

Assembly:
From the rear.

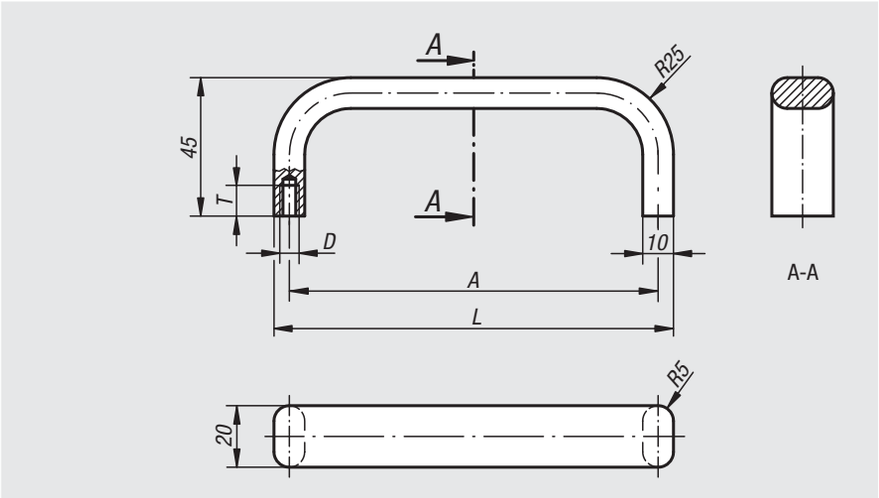

Order No. black anodized	Order No. natural anodized	A	D	L	T	Load capacity N
06921-12001	**06921-12003**	120	M5	130	10	500
06921-18001	**06921-18003**	180	M5	190	10	500
06921-20001	**06921-20003**	200	M5	210	10	500
06921-35001	**06921-35003**	350	M6	360	12	500

06922

Pull handles

stainless steel

Material:
Pull handle stainless steel 1.4404.
Fastening material A4 grade.

Version:
Semi-gloss vibratory ground.

Sample order:
nlm 06922-120

Note:
Stainless steel pull handles are used mainly on equipment in the medical and food industry as well as in laboratories and neuclear technology.

Assembly:
From the rear.

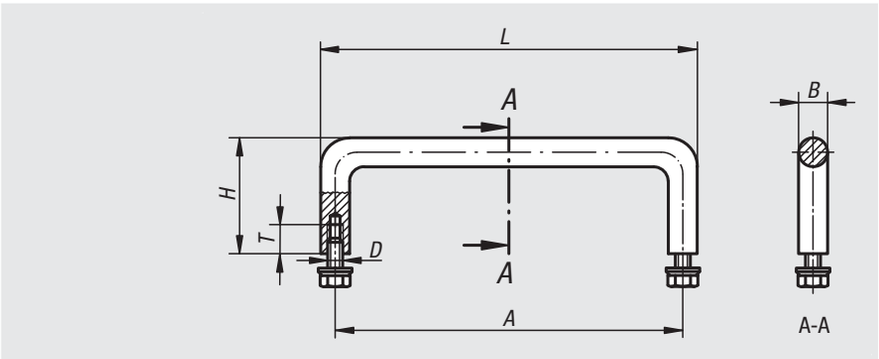

Order No.	A	B	D	H	L	T	Load capacity N
06922-100	100	8	M5x10	35	108	10	1000
06922-120	120	10	M5x10	40	130	10	1000
06922-250	250	10	M5x10	40	260	10	1000
06922-350	350	10	M5x10	40	360	10	1000

Pull handles angled

Material:
Round steel

Version:
Finely ground and high-gloss chrome-plated.

Sample order:
nlm 06923-06008

Assembly:
From the rear.

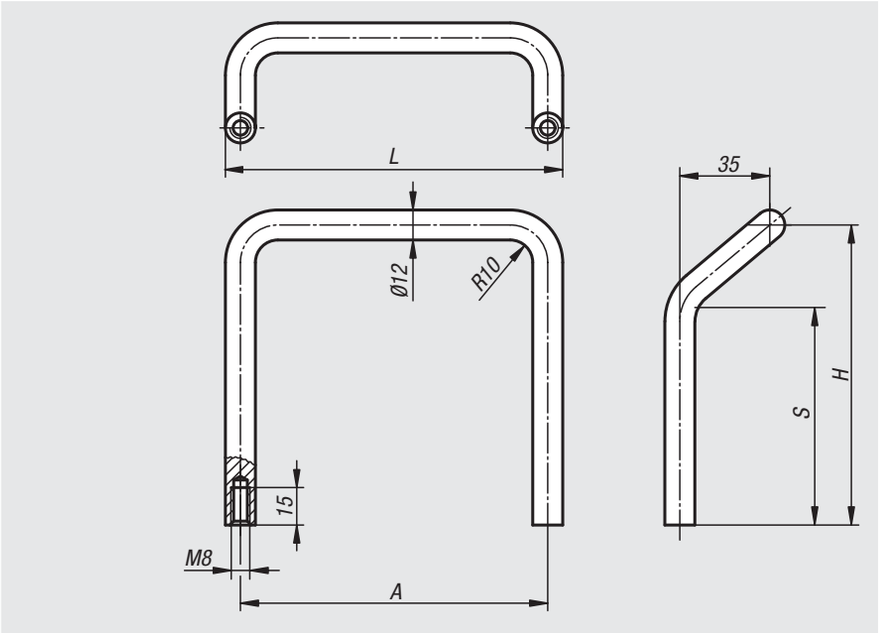

Order No.	A	H	L	S	Load capacity N
06923-06008	120	60	132	27	1000
06923-12008	120	120	132	87	1000

Pull handles

stainless steel

Material:
Handle stainless steel 1.4404.
Fastening material 1.4301

Version:
Semi-gloss tumbled.

Sample order:
nlm 06924-10005

Assembly:
From the rear.

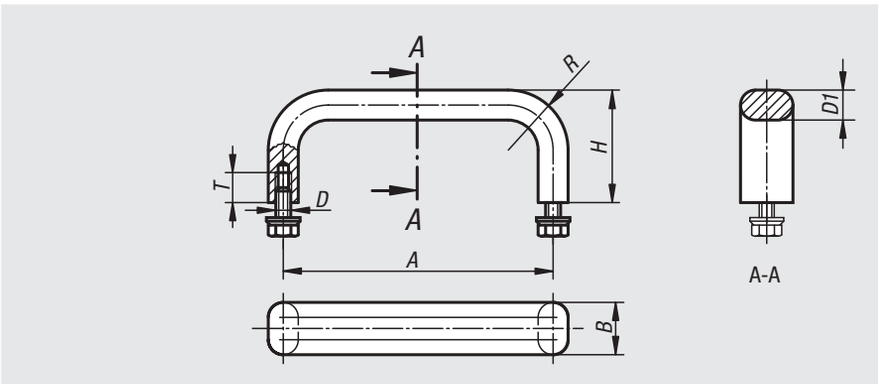

Order No.	A	B	D	D1	H	R	T	Load capacity N
06924-10005	100	12	M5x10	8	40	22	10	1000
06924-12005	120	12	M5x10	8	40	22	10	1000
06924-15005	150	12	M5x10	8	40	22	10	1000
06924-18005	180	12	M5x10	8	40	22	10	1000
06924-25005	250	12	M5x10	8	40	22	10	1000
06924-10006	100	19,5	M6x12	10	45	24	12	1000
06924-12006	120	19,5	M6x12	10	45	24	12	1000
06924-15006	150	19,5	M6x12	10	45	24	12	1000
06924-18006	180	19,5	M6x12	10	45	24	12	1000
06924-25006	250	19,5	M6x12	10	45	24	12	1000

06925

Pull handles tubular

Material:
Aluminium.

Version:
Leg black powder-coated.
Grip natural colour anodized.

Sample order:
nlm 06925-300

Note:
Black galvanized M12x70 hexagon socket bolts, suitable washers and nuts for fastening are supplied.

Assembly:
From the front.

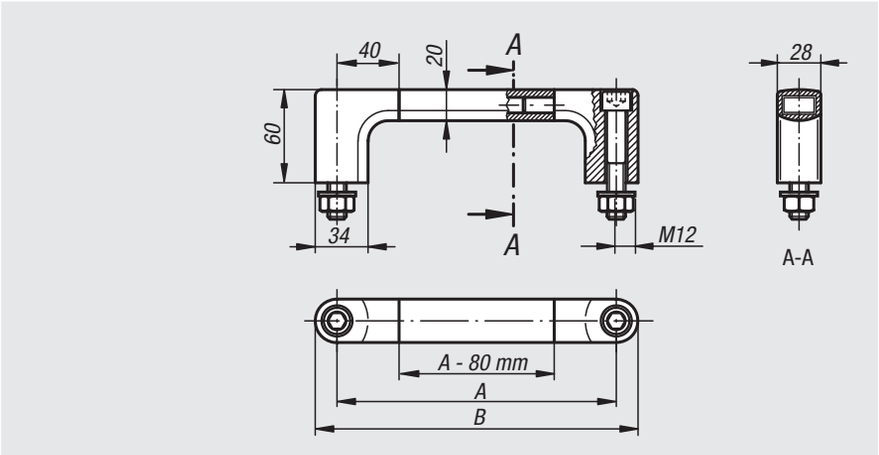

Order No.	A	B	Load capacity N
06925-180	180	208	1000
06925-200	200	228	1000
06925-250	250	278	1000
06925-300	300	328	1000
06925-350	350	378	1000
06925-400	400	428	1000
06925-500	500	528	1000
06925-600	600	628	1000

06926

Pull handles tubular

Material:
Legs black glass-bead reinforced thermoplastic.
Grip tube aluminium.

Version:
Form A
Grip, ground and natural colour anodised
Form B
Grip with serrated plastic sheath.

Sample order:
nlm 06926-200

Note:
The legs have 4 webs in the hole for the grip tube. When pushing the tube in, these are trimmed off and produce a precise seating.
Black galvanized fastening screws, suitable washers and nuts are supplied.

Assembly:
From the front.

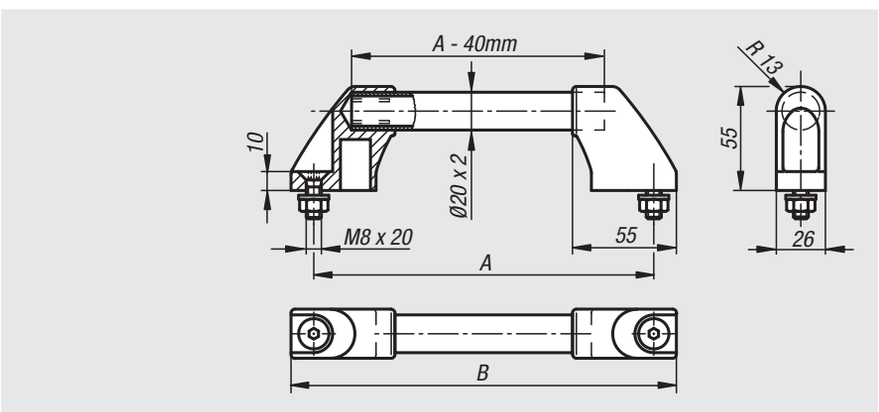

Order No. Form A	Order No. Form B	A	B	Load capacity N
06926-180	**06926-1803**	180	204	500
06926-200	**06926-2003**	200	224	500
06926-250	**06926-2503**	250	274	500
06926-300	**06926-3003**	300	324	500
06926-350	**06926-3503**	350	374	500
06926-400	**06926-4003**	400	424	500
06926-500	**06926-5003**	500	524	500
06926-600	**06926-6003**	600	624	500

Pull handles tubular

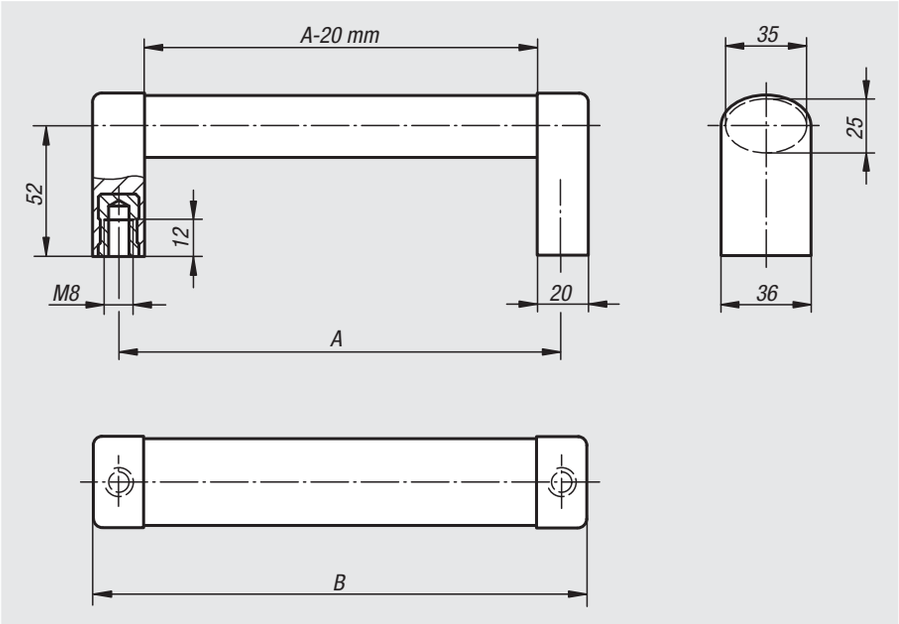

Material:
Grip aluminium EN AW-6060.
Legs polyamide glass-bead reinforced.
Bushing brass.
Clamping sleeves stainless steel.

Version:
Grip natural colour or black anodized.
Legs aluminium colour or black.

Sample order:
nlm 06927-1200081

Note:
Oval-profile handles for joining together. Version with plastic legs and aluminium oval grip.

Assembly:
From the rear.

Order No.	Main colour	Component colour	A	B	Load capacity N
06927-1200081	natural anodized	aluminium tone	200	220	1000
06927-1250081	natural anodized	aluminium tone	250	270	1000
06927-1300081	natural anodized	aluminium tone	300	320	1000
06927-1400081	natural anodized	aluminium tone	400	420	1000
06927-1500081	natural anodized	aluminium tone	500	520	1000
06927-1200082	natural anodized	black	200	220	1000
06927-1250082	natural anodized	black	250	270	1000
06927-1300082	natural anodized	black	300	320	1000
06927-1400082	natural anodized	black	400	420	1000
06927-1500082	natural anodized	black	500	520	1000
06927-1200083	black anodized	black	200	220	1000
06927-1250083	black anodized	black	250	270	1000
06927-1300083	black anodized	black	300	320	1000
06927-1400083	black anodized	black	400	420	1000
06927-1500083	black anodized	black	500	520	1000

Pull handles tubular

oblique

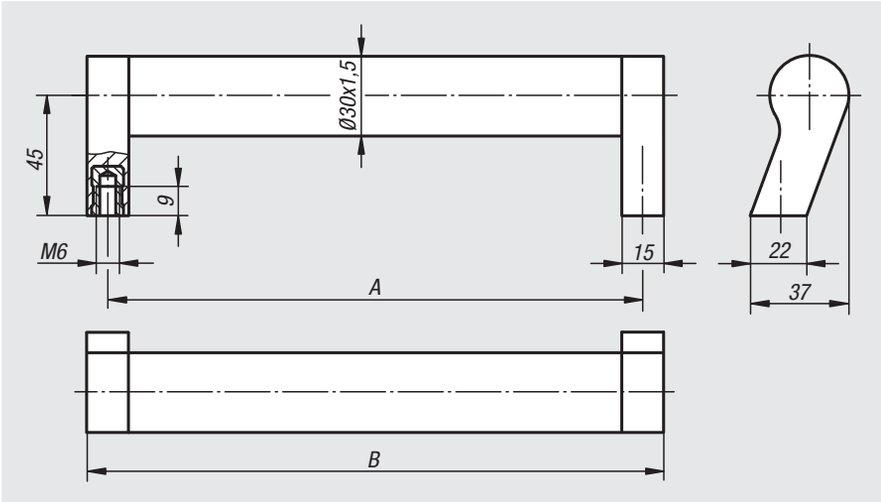

Material:
Grip tube aluminium EN AW-6060;
Legs polyamide, glass-bead reinforced;
Bushing brass

Version:
Tube matt-polished anodized.
Legs black

Sample order:
nlm 06928-2150061

Note:
Oblique tubular pull handles in modern industrial design. Webs on the leg spigot provide a precision fit for the tube.

Assembly:
From the rear.

Order No.	A	B	Load capacity N
06928-2150061	150	165	800
06928-2200061	200	215	800
06928-2250061	250	265	800
06928-2300061	300	315	800
06928-2350061	350	365	800
06928-2400061	400	415	800

Pull handles

Material:
Profile aluminium EN AW-6060

Version:
Matt-finished, black anodized or natural colour anodized

Sample order:
nlm 06929-12001

Assembly:
From the rear.

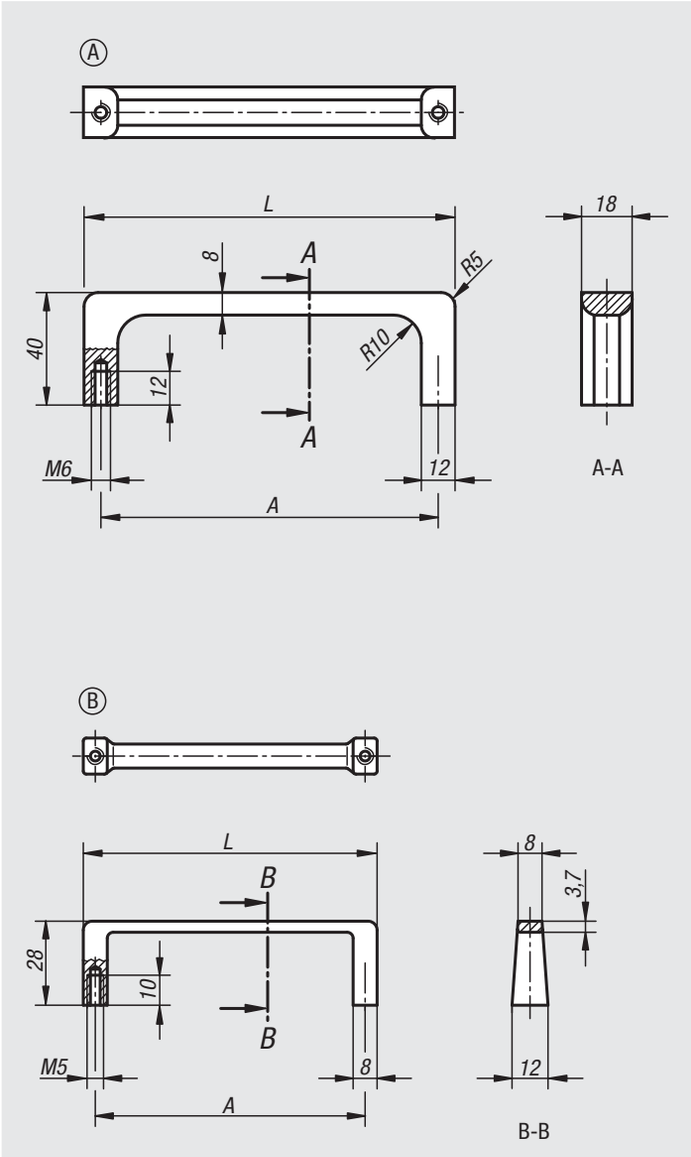

Order No.	Form	Main colour	A	L	Load capacity N
06929-12001	A	black anodized	120	132	500
06929-09001	B	black anodized	90	98	300
06929-12003	A	natural anodized	120	132	500
06929-09003	B	natural anodized	90	98	300

Pull handles

high-gloss chromed

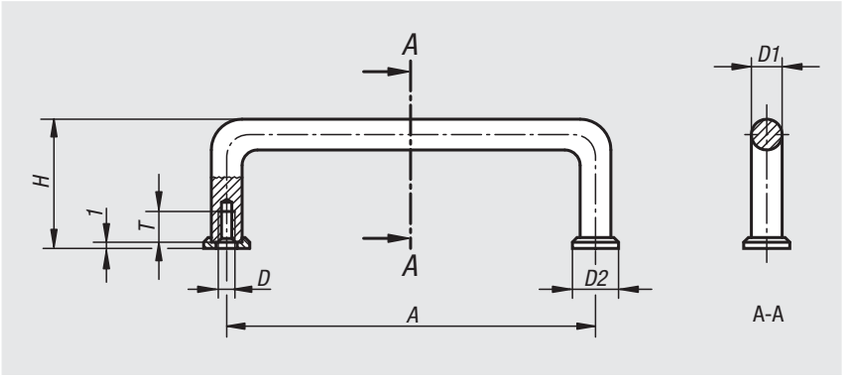

Material:
Steel.

Version:
Finely ground and high-gloss chromed

Sample order:
nlm 06930-10204

Note:
These pull handles are used primarily on optical devices, laboratory installations, audio, video and hi-fi equipment, etc. The end washers are supplied loose.

Assembly:
From the rear.

On request:
Other surface finishes.

Order No.	A	D	D1	D2	H	T	Load capacity N
06930-03203	32	M3	5	8	21	6	1000
06930-04203	42	M3	5	8	25	6	1000
06930-05503	55	M3	5	8	25	6	1000
06930-07603	76	M3	5	8	25	6	1000
06930-08803	88	M3	5	8	25	6	1000
06930-03204	32	M4	8	12,5	33	8	1000
06930-05504	55	M4	8	12,5	33	8	1000
06930-06404	64	M4	8	12,5	33	8	1000
06930-08804	88	M4	8	12,5	33	8	1000
06930-09604	96	M4	8	12,5	33	8	1000
06930-09804	98	M4	8	12,5	33	8	1000
06930-10204	102	M4	8	12,5	33	8	1000
06930-12004	120	M4	8	12,5	33	8	1000
06930-12804	128	M4	8	12,5	33	8	1000
06930-13604	136	M4	8	12,5	33	8	1000
06930-05505	55	M5	10	15	41	10	1000
06930-08805	88	M5	10	15	41	10	1000
06930-10005	100	M5	10	15	41	10	1000
06930-10205	102	M5	10	15	41	10	1000
06930-11505	115	M5	10	15	41	10	1000
06930-12005	120	M5	10	15	41	10	1000
06930-13605	136	M5	10	15	41	10	1000
06930-18005	180	M5	10	15	41	10	1000
06930-20005	200	M5	10	15	41	10	1000
06930-23505	235	M5	10	15	41	10	1000
06930-25005	250	M5	10	15	41	10	1000

Pull handles

stainless steel

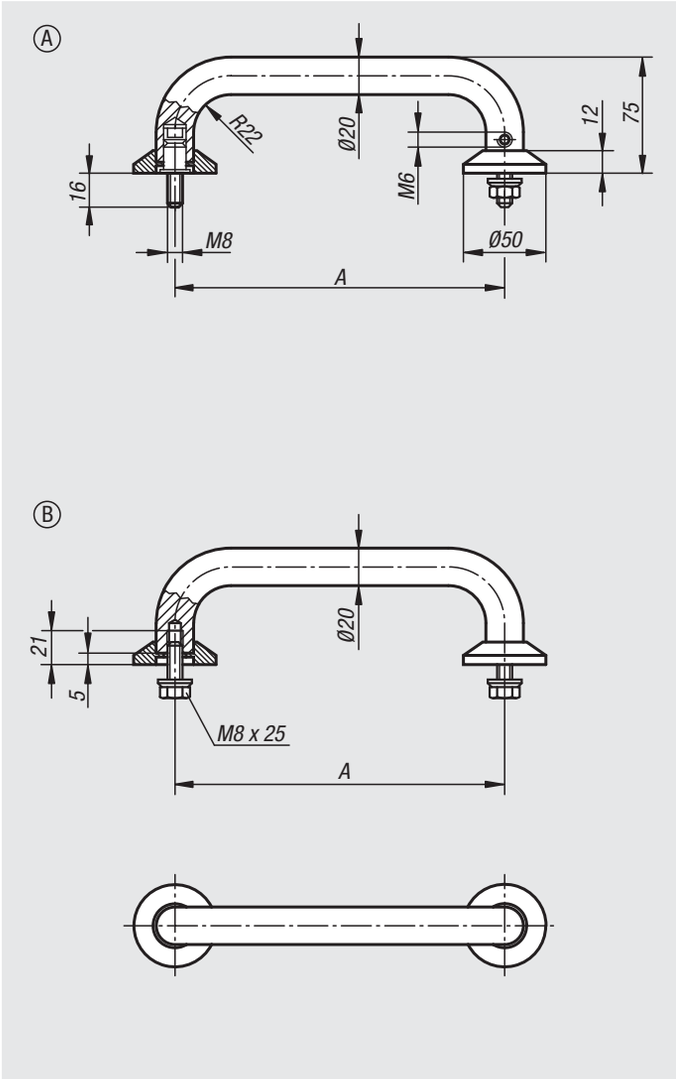

Material:
Handle stainless steel 1.4404.
Fasteners made of stainless steel 1.4404.

Version:
Ground and satin brushed finish.

Sample order:
nlm 06931-2001

Note:
These stainless steel pull handles are ideal for all technical applications where highest load and high chemical or corrosive resistance is required.

Assembly:
From the rear.

Drawing reference:
Form A
fastening from the front.
Form B
fastening from the rear.

Order No.	Form	A	Load capacity N
06931-2001	A	200	1000
06931-2501	A	250	1000
06931-2002	B	200	1000
06931-2502	B	250	1000

Pull handles

Material:
Grip aluminium.
Legs glass-bead reinforced polyamide.

Version:
Grip matt-finished and natural tone or black anodized.
Legs fine structure semi-matt, black.

Sample order:
nlm 06932-10001

Assembly:
From the front.

Drawing reference:
1) Toothed locknut

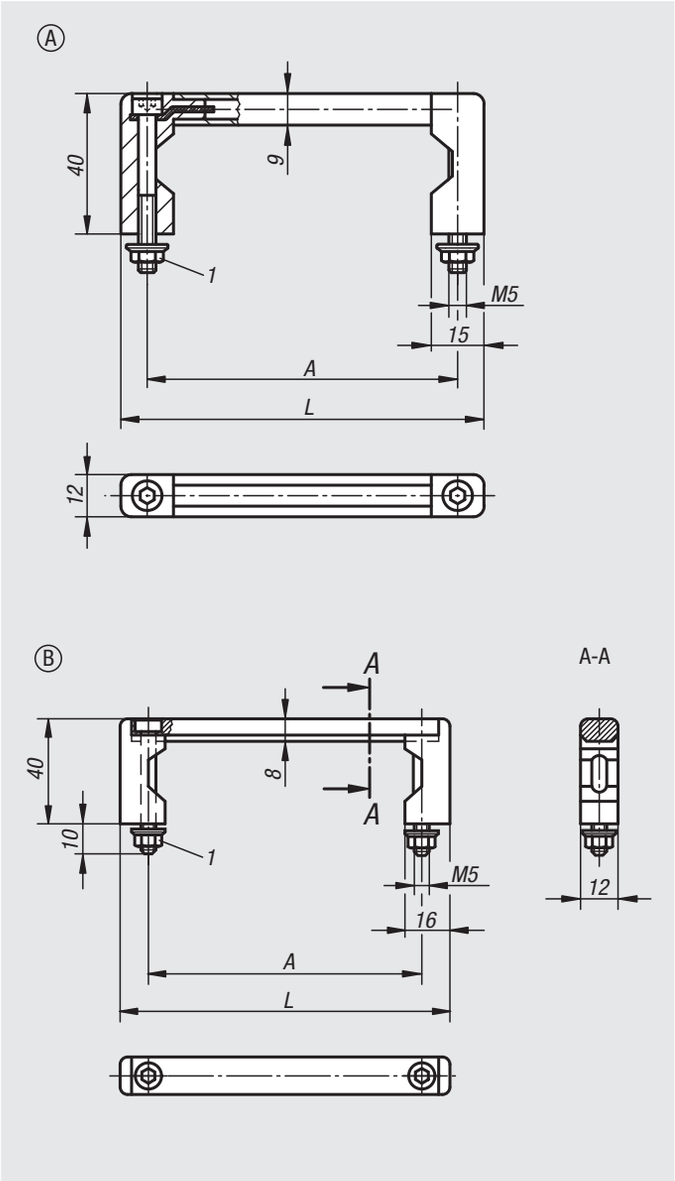

Order No. black anodized	Order No. natural anodized	Form	A	L	Load capacity N
06932-05501	06932-05503	A	55	70	1000
06932-08801	06932-08803	A	88	103	1000
06932-10001	06932-10003	A	100	115	1000
06932-12001	06932-12003	A	120	135	1000
06932-18001	06932-18003	A	180	195	1000
06932-23501	06932-23503	A	235	250	1000
06932-055101	06932-055103	B	55	75	1000
06932-088101	06932-088103	B	88	108	1000
06932-100101	06932-100103	B	100	120	1000
06932-120101	06932-120103	B	120	140	1000
06932-180101	06932-180103	B	180	200	1000
06932-235101	06932-235103	B	235	255	1000

Pull handles

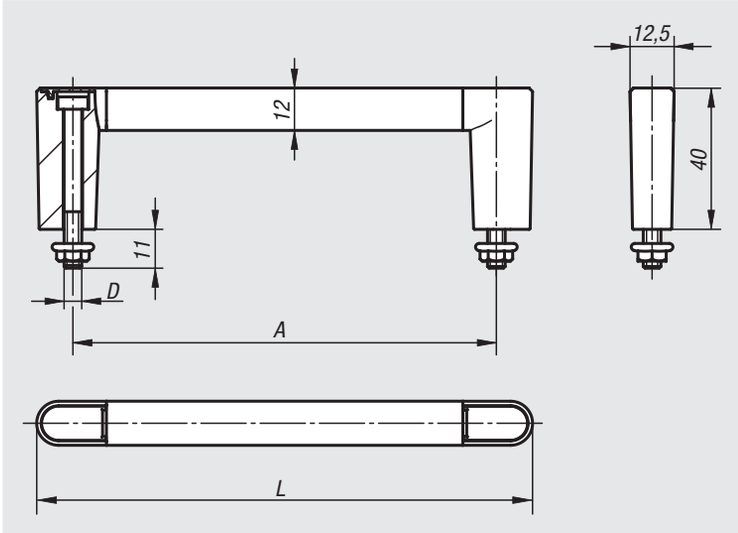

Material:
Grip aluminium.
Legs and cap PA 6.
Screw and flange nut steel.

Version:
Grip natural colour or black anodized.
Screw and flange nut galvanized.

Sample order:
nlm 06932-120203

Note:
- 19“
- Closed design
- Simple assembly
- The cap is tapped on using a plastic hammer

Order No. black anodized	Order No. natural anodized	A	D	L	Load capacity N
06932-055201	06932-055203	55	M5	75,5	1000
06932-088201	06932-088203	88	M5	108,5	1000
06932-100201	06932-100203	100	M5	120,5	1000
06932-120201	06932-120203	120	M5	140,5	1000
06932-180201	06932-180203	180	M5	200,5	1000
06932-235201	06932-235203	235	M5	255,5	1000

Pull handles

19"

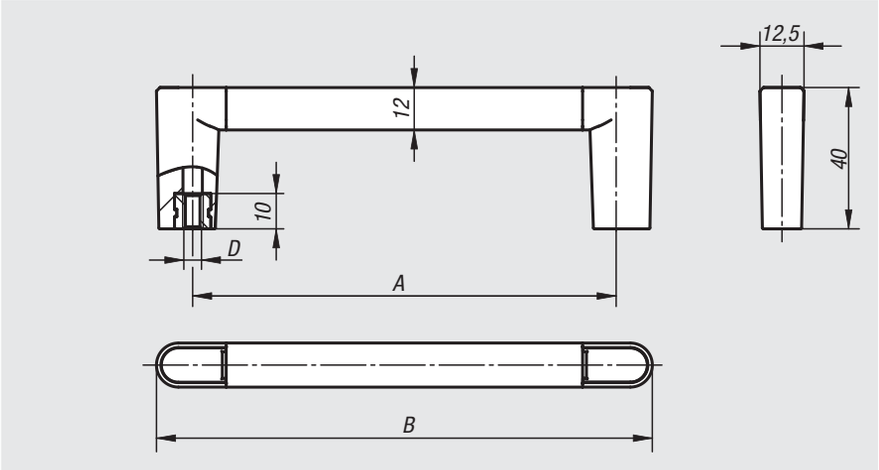

Material:
Grip aluminium.
Legs and cap PA 6.
Tapped bush steel.

Version:
Grip natural colour or black anodized.
Tapped bush galvanized.

Sample order:
nlm 06933-120101

Note:
- 19"
- Closed design
- Simple assembly
- The cap is tapped on using a plastic hammer

Order No. black anodized	Order No. natural anodized	A	B	D	Load capacity N
06933-055101	06933-055103	55	75,5	M5	1000
06933-088101	06933-088103	88	108,5	M5	1000
06933-100101	06933-100103	100	120,5	M5	1000
06933-120101	06933-120103	120	140,5	M5	1000
06933-180101	06933-180103	180	200,5	M5	1000
06933-235101	06933-235103	235	255,5	M5	1000

06933

Pull handles

19"

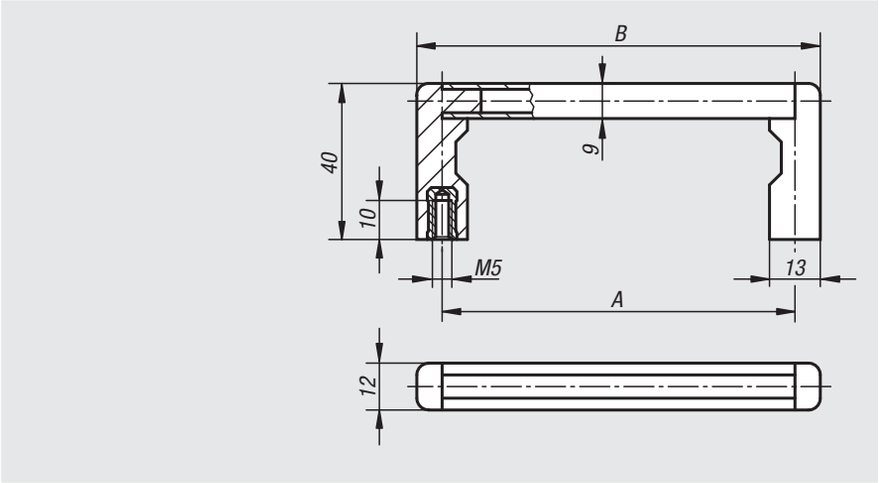

Material:
Grip aluminium.
Legs high-strength plastic

Sample order:
nlm 06933-05501

Note:
Shorten the aluminium grip to reduce the handle length.

Assembly:
From the rear.

Order No. black anodized	Order No. natural anodized	A	B	Load capacity N
06933-05501	06933-05503	55	69	1000
06933-08801	06933-08803	88	102	1000
06933-10001	06933-10003	100	114	1000
06933-12001	06933-12003	120	134	1000
06933-18001	06933-18003	180	194	1000
06933-23501	06933-23503	235	249	1000

Pull handles

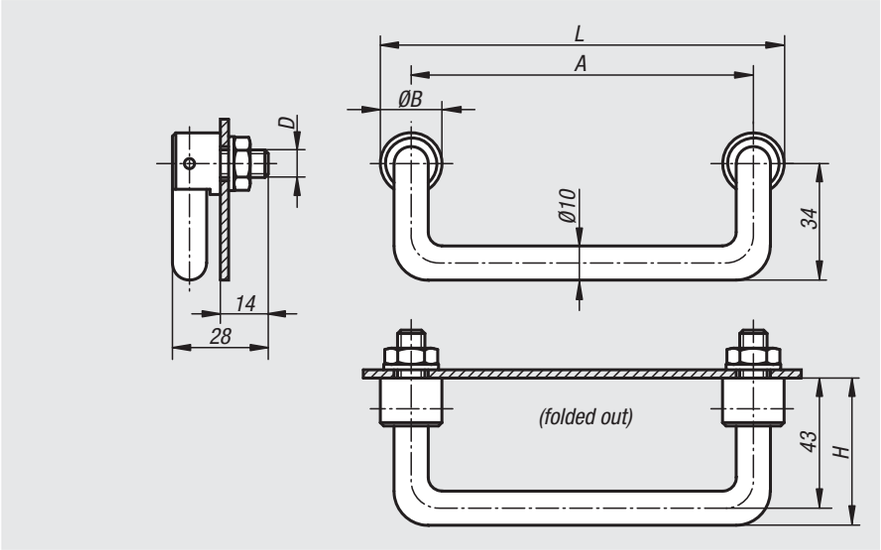

Material:
Steel or 1.4305 stainless steel

Version:
Steel version:
Surface finely ground and high-gloss chromed or with a smooth plastic cover on the grip.

Stainless steel version:
Surface semi-gloss score-free vibratory ground.

Sample order:
nlm 06934-1201

Note:
Steel or stainless steel fastening material is provided.
Spring lock in both end positions.

Assembly:
From the rear.

Order No. steel	Order No. steel with plastic cover	Order No. stainless steel	A	B	D	H	L	Load capacity N
06934-1001	**06934-1002**	**06934-1003**	100	18	M10x1	48	118	500
06934-1201	**06934-1202**	**06934-1203**	120	18	M10x1	48	138	500
06934-1801	**06934-1802**	**06934-1803**	180	18	M10x1	48	198	500

06935

Pull handles angled

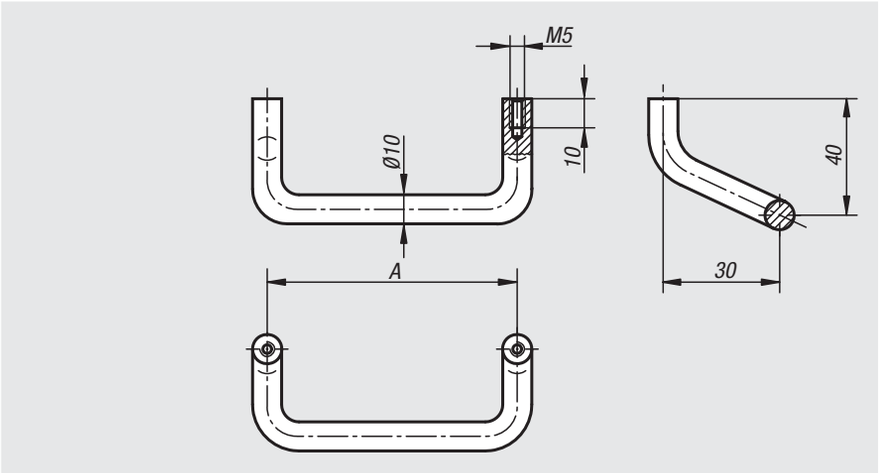

Material:
Aluminium.

Version:
Matt-finished, black anodized or natural colour anodized.

Sample order:
nlm 06935-12001

Assembly:
From the rear.

Order No. black anodized	Order No. natural anodized	A	Load capacity N
06935-08601	**06935-08603**	86	500
06935-12001	**06935-12003**	120	500
06935-18001	**06935-18003**	180	500

06936

Pull handles tubular angled

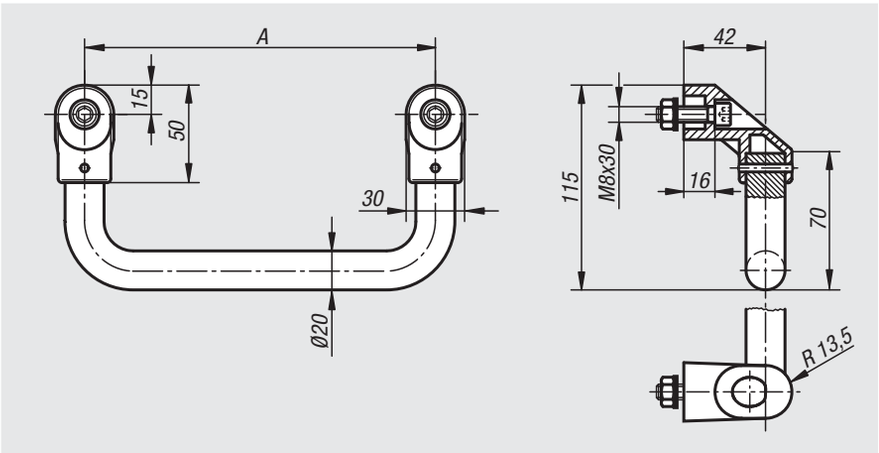

Material:
Leg glass-bead reinforced thermoplastic.
Grip aluminium tube.

Version:
Black thermoplastic.
Anodized aluminium.

Sample order:
nlm 06936-3002

Note:
The legs are pinned to the aluminium tube. Black galvanized socket head screws, nuts and washers are supplied.

Assembly:
From the front.

Order No. natural anodized	Order No. black anodized	A	Load capacity N
06936-2001	**06936-2002**	200	800
06936-2501	**06936-2502**	250	800
06936-3001	**06936-3002**	300	800
06936-3501	**06936-3502**	350	800
06936-4001	**06936-4002**	400	800

Pull handles tubular

Material:
Legs black glass-bead reinforced thermoplastic.
Grip aluminium EN AW-6060.

Version:
Form A
Grip, ground and natural colour anodised
Form B
Grip with serrated plastic sheath.

Sample order:
nlm 06937-3001

Note:
The legs have 4 webs in the hole for the grip tube. When pushing the tube in these are trimmed off and produce a precise seating. Black galvanized fastening screws, suitable washers and nuts are supplied.

Assembly:
From the front.

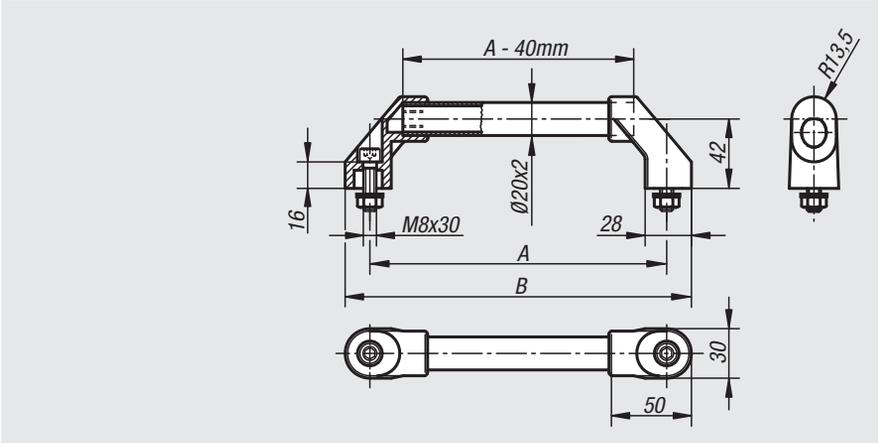

Order No. Form A	Order No. Form B	A	B	Load capacity N
06937-1801	06937-1802	180	210	1000
06937-2001	06937-2002	200	230	1000
06937-2501	06937-2502	250	280	1000
06937-3001	06937-3002	300	330	1000
06937-3501	06937-3502	350	380	1000
06937-4001	06937-4002	400	430	1000
06937-5001	06937-5002	500	530	1000
06937-6001	06937-6002	600	630	1000

Pull handles tubular

Material:
Legs black glass-bead reinforced thermoplastic.
Grip aluminium EN AW-6060 or stainless steel 1.4301.

Sample order:
nlm 06938-3501

Note:
The legs have 4 webs in the hole for the grip tube. When pushing the tube in these are trimmed off and produce a precise seating. Black galvanized fastening screws, suitable washers and nuts are supplied.

Form A grip ground and natural colour anodized.
Form B grip with serrated plastic coating.
Form C grip stainless steel, finely ground.

Assembly:
From the front.

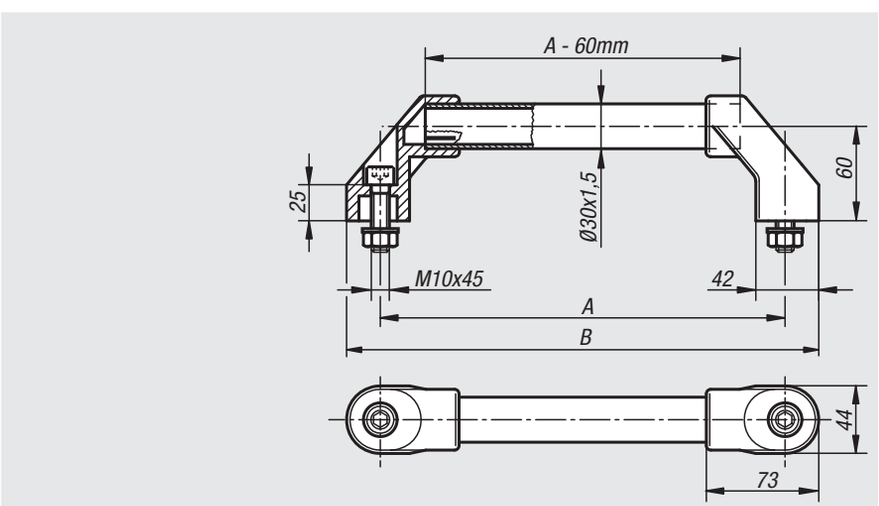

Order No. Form A	Order No. Form B	Order No. Form C	A	B	Load capacity N
06938-2501	06938-2502	06938-2503	250	294	1000
06938-3001	06938-3002	06938-3003	300	344	1000
06938-3501	06938-3502	06938-3503	350	394	1000
06938-4001	06938-4002	06938-4003	400	444	1000
06938-5001	06938-5002	06938-5003	500	544	1000
06938-6001	06938-6002	06938-6003	600	644	1000

Pull handles tubular

Material:
Grip aluminium EN AW-6060.
Legs glass-bead reinforced polyamide.

Version:
Grip natural colour anodized or with black serrated plastic cover.

Sample order:
nlm 06939-150203

Note:
The legs have 2 or 4 PVC profile pins in the hole for the grip tube. When pushing the tube in these are trimmed off and produce a precise seating.
Black galvanized fastening screws, suitable washers and nuts are supplied.

Assembly:
From the front.

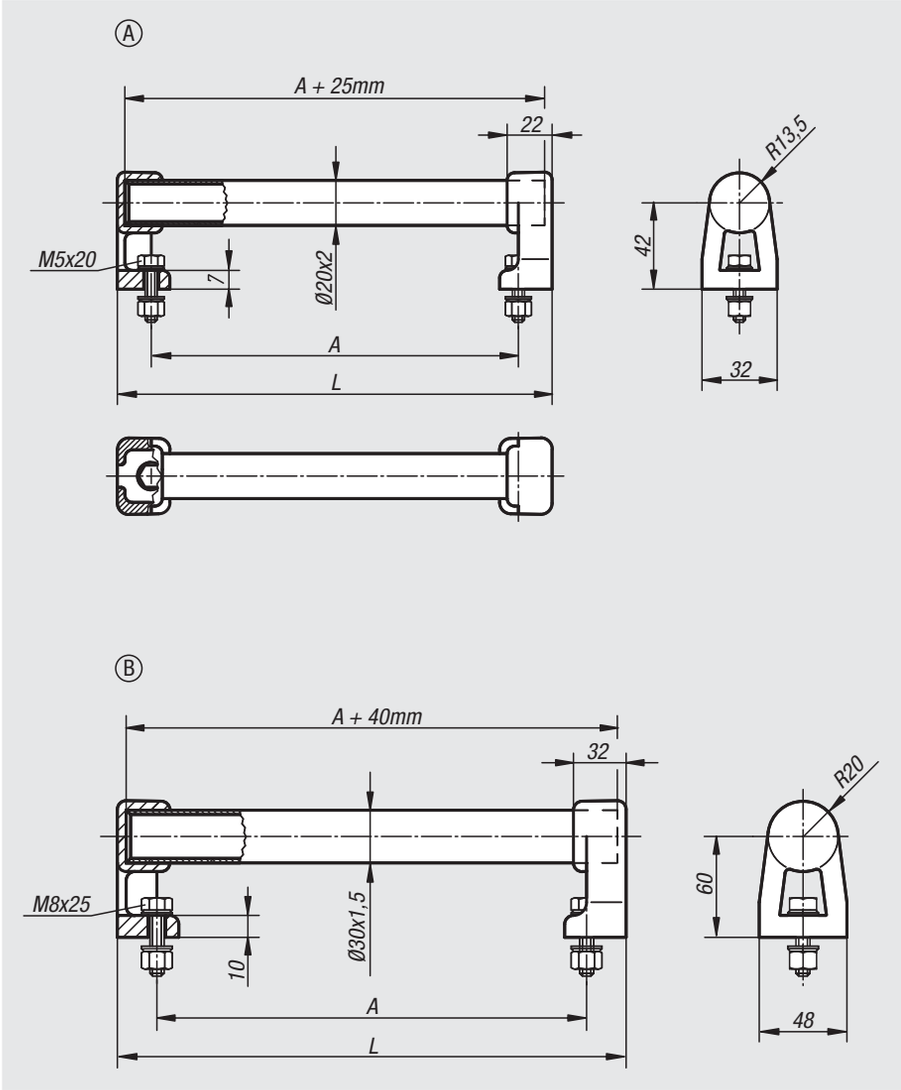

Order No. natural anodized	Order No. black plastic ribbed	Form	A	L	Load capacity N
06939-150203	06939-150202	A	150	184	1000
06939-200203	06939-200202	A	200	234	1000
06939-300203	06939-300202	A	300	334	1000
06939-400203	06939-400202	A	400	434	1000
06939-500203	06939-500202	A	500	534	1000
06939-150303	06939-150302	B	150	200	1000
06939-300303	06939-300302	B	300	350	1000
06939-400303	06939-400302	B	400	450	1000
06939-200303	06939-200302	B	200	250	1000
06939-500303	06939-500302	B	500	550	1000

Pull handles tubular

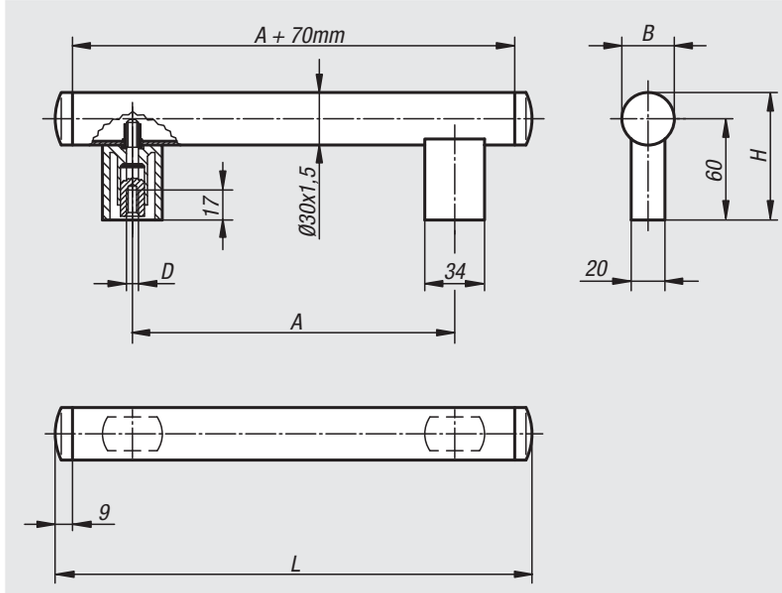

Material:
Legs and tube cap glass-bead reinforced polyamide.
Grip aluminium EN AW-6060.

Version:
Grip finely ground and black anodized or natural colour anodized.
Legs and tube cap semi-matt with fine texture, black.

Sample order:
nlm 06940-200061

Note:
The legs and tube are fastened together with pull-out resistant rivet nuts.

Assembly:
From the rear.

Order No.	Main colour	A	B	D	H	L	Load capacity N
06940-200061	black anodized	200	30	M6	75	288	800
06940-250061	black anodized	250	30	M6	75	338	800
06940-300061	black anodized	300	30	M6	75	388	800
06940-400061	black anodized	400	30	M6	75	488	800
06940-500061	black anodized	500	30	M6	75	588	800
06940-200063	natural anodized	200	30	M6	75	288	800
06940-250063	natural anodized	250	30	M6	75	338	800
06940-300063	natural anodized	300	30	M6	75	388	800
06940-400063	natural anodized	400	30	M6	75	488	800
06940-500063	natural anodized	500	30	M6	75	588	800

Pull handles tubular

Material:
Grip stainless steel 1.4301.
Legs die-cast aluminium.
End caps glass-bead reinforced plastic.
Screws and locking pins steel.

Version:
Grip finely ground.
Legs black powder-coated.
End cap black.
Screws and pins galvanized and chromed.

Sample order:
nlm 06941-0600101

Note:
Heavy duty tubular pull handles for machine and plant construction. Easy mounting from the front. Adjustable leg spacing by the same grip length.

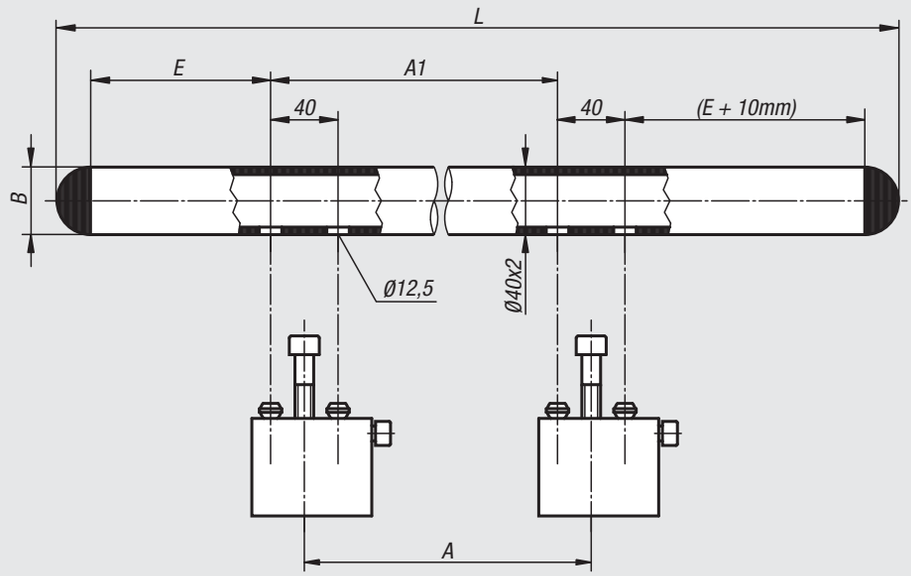

Leg locking diagram:

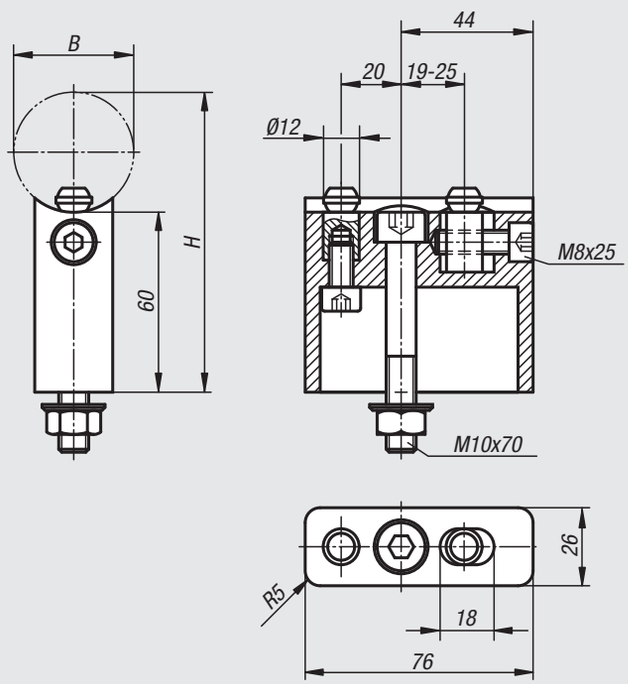

Order No.	A	A1	B	E	H	L	Load capacity N
06941-0600101	380	380	40	85	100	640	1000
06941-0700101	480	480	40	85	100	740	1000
06941-0800101	500	500	40	125	100	840	1000
06941-0900101	600	600	40	125	100	940	1000
06941-1000101	700	700	40	125	100	1040	1000

Pull handles tubular

Material:
Legs glass-bead reinforced thermoplastic.
Grip stainless steel 1.4301.
Inserts stainless steel 1.4305.

Version:
Legs fine structured, black.
Grip fine ground.
Inserts fine turned.

Sample order:
nlm 06942-300101

Note:
Locking webs allow a precision fit of the tube on the plastic leg boss.
Splash-proof with O-ring seals.
Different fastening inserts allow mounting from the front, rear or with each other.
Handles with through hole inserts (Form A) are supplied with stainless steel fasteners.
Handles with tapped inserts (Form B) are supplied without fasteners.

Drawing reference:
Form A: screw head insert
Form B: threaded insert
1) Screw head insert (A) or threaded insert (B).

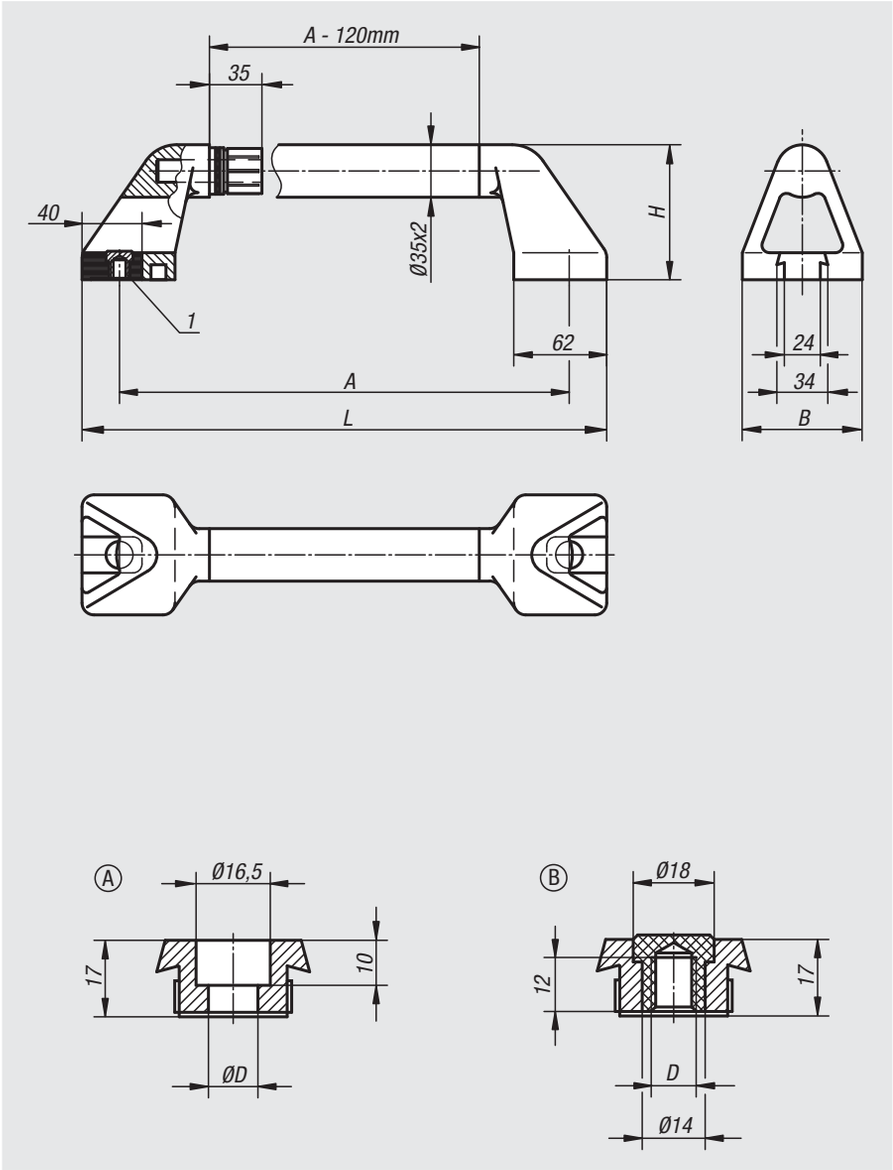

Order No.	Form	A	B	D	H	L	Load capacity N
06942-300101	A	300	80	11	90	350	1000
06942-350101	A	350	80	11	90	400	1000
06942-400101	A	400	80	11	90	450	1000
06942-500101	A	500	80	11	90	550	1000
06942-600101	A	600	80	11	90	650	1000
06942-300102	B	300	80	M10	90	350	1000
06942-350102	B	350	80	M10	90	400	1000
06942-400102	B	400	80	M10	90	450	1000
06942-500102	B	500	80	M10	90	550	1000
06942-600102	B	600	80	M10	90	650	1000

Pull handles tubular stainless steel

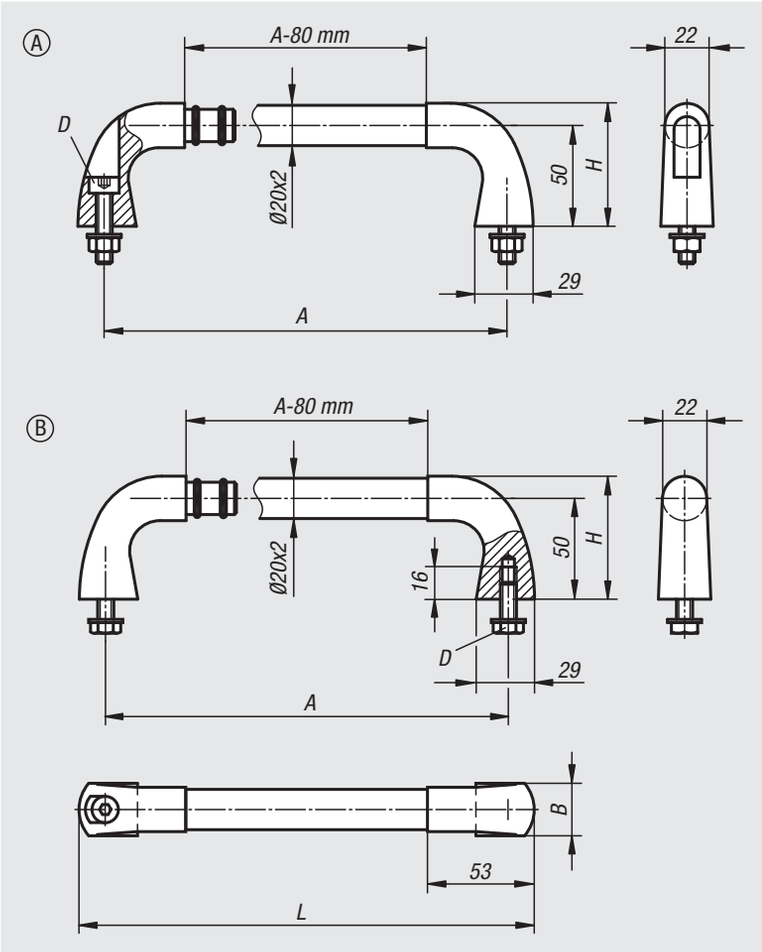

Material:
Grip and fasteners stainless steel 1.4301,
Legs investment cast 1.4581

Version:
Grip finely ground or with ribbed black plastic sleeve.
Legs abrasive cleaned and matt-gloss electropolished.

Sample order:
nlm 06943-200081

Note:
Socket head screws with nuts and washers are supplied for handles Form A.
Hexagon head screws and suitable washers are supplied for handles Form B.

Assembly:
Form A from the front.
Form B from the rear.

Order No.	Form	Main colour	A	B	D	H	L	Load capacity N
06943-200081	A	ground	200	26	M8x35	60	226	1000
06943-300081	A	ground	300	26	M8x35	60	326	1000
06943-400081	A	ground	400	26	M8x35	60	426	1000
06943-200082	A	black plastic ribbed	200	26	M8x35	60	226	1000
06943-300082	A	black plastic ribbed	300	26	M8x35	60	326	1000
06943-400082	A	black plastic ribbed	400	26	M8x35	60	426	1000
06943-200083	B	ground	200	26	M8x20	60	226	1000
06943-300083	B	ground	300	26	M8x20	60	326	1000
06943-400083	B	ground	400	26	M8x20	60	426	1000
06943-200084	B	black plastic ribbed	200	26	M8x20	60	226	1000
06943-300084	B	black plastic ribbed	300	26	M8x20	60	326	1000
06943-400084	B	black plastic ribbed	400	26	M8x20	60	426	1000

Pull handles

Material:
Legs and grip aluminium EN AW-6060.
Connecting pins stainless steel.

Version:
Legs and grip finely ground, black anodized or natural colour anodized.

Sample order:
nlm 06944-250081

Note:
The solid construction permits this handle series to also be used as edge protectors.

Assembly:
From the rear.

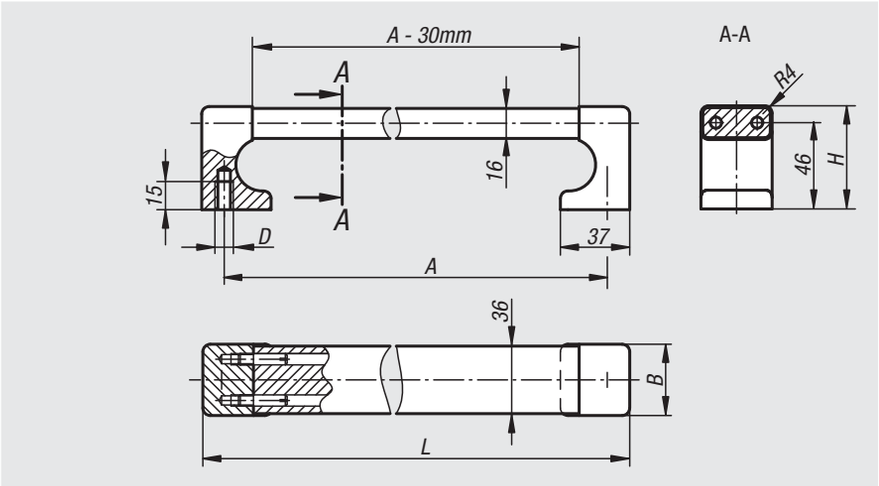

Order No. black anodized	Order No. natural anodized	A	B	D	H	L	Load capacity N
06944-250081	**06944-250083**	250	38	M8	55	274	1000
06944-300081	**06944-300083**	300	38	M8	55	324	1000
06944-400081	**06944-400083**	400	38	M8	55	424	1000
06944-500081	**06944-500083**	500	38	M8	55	524	1000
06944-600081	**06944-600083**	600	38	M8	55	624	1000

Pull handles angled

Material:
Round aluminium EN AW-6060

Version:
Ground, glass blasted and matt-gloss black anodized.

Sample order:
nlm 06945-20016

Note:
End washers not included.

Assembly:
From the rear.

On request:
Any handle length.

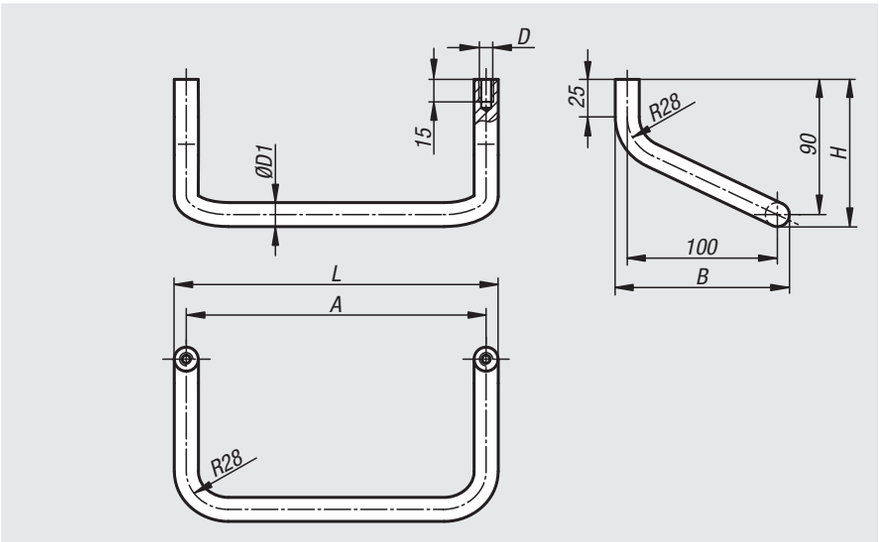

Order No.	A	B	D	D1	H	L	Load capacity N	Order No. end washer
06945-20016	200	116	M8	16	98	216	1000	06945-16
06945-25016	250	116	M8	16	98	266	1000	06945-16
06945-30016	300	116	M8	16	98	316	1000	06945-16
06945-40016	400	116	M8	16	98	416	1000	06945-16
06945-50018	500	118	M8	18	99	518	1000	06945-18

Pull handles

Material:
Round steel

Version:
Ground, brushed and matt-chromed or black powder-coated with fine texture

Sample order:
nlm 06946-200081

Note:
Available as straight or right-angled handle.

Assembly:
From the rear.

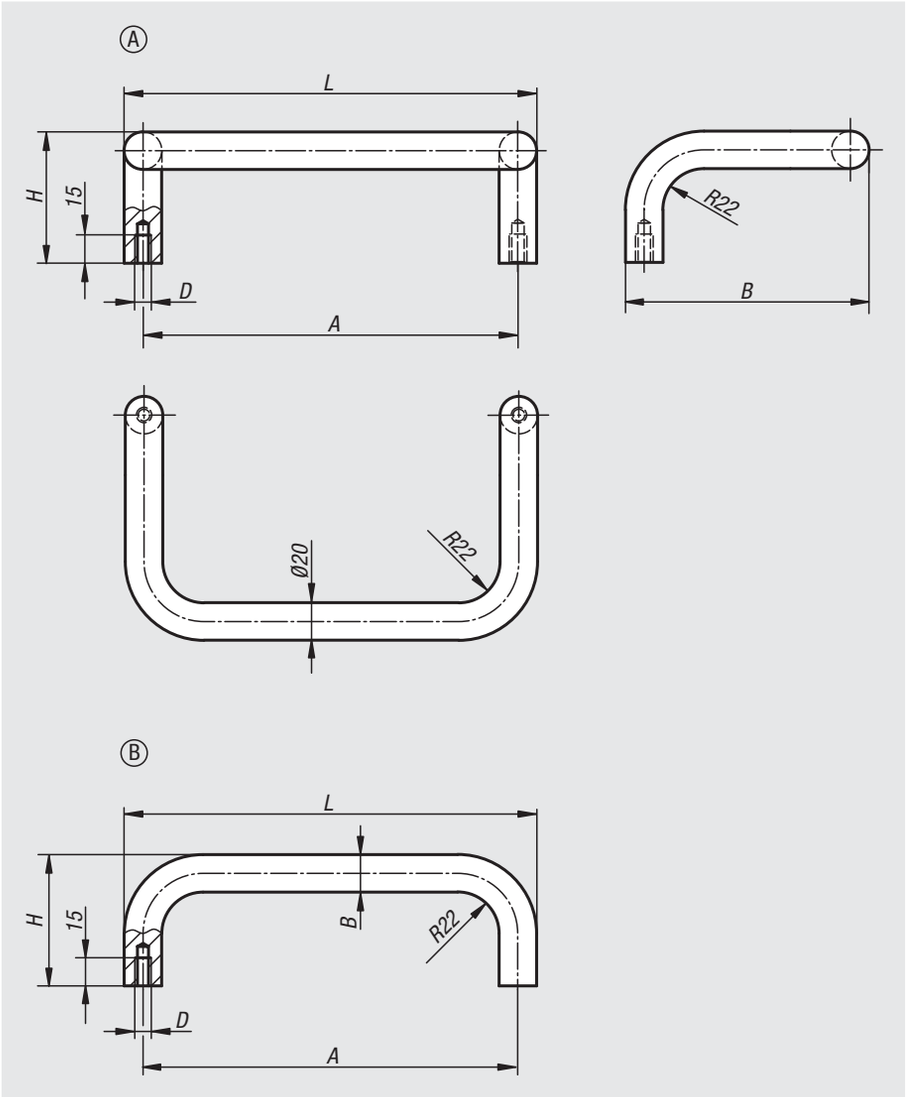

Order No.	Form	Main colour	A	B	D	H	L	Load capacity N
06946-200081	A	matt chromed	200	130	M8	70	220	1000
06946-350081	A	matt chromed	350	130	M8	70	370	1000
06946-200082	A	black powder-coated	200	130	M8	70	220	1000
06946-350082	A	black powder-coated	350	130	M8	70	370	1000
06946-200083	B	matt chromed	200	20	M8	70	220	1000
06946-250083	B	matt chromed	250	20	M8	70	270	1000
06946-300083	B	matt chromed	300	20	M8	70	320	1000
06946-350083	B	matt chromed	350	20	M8	70	370	1000
06946-200084	B	black powder-coated	200	20	M8	70	220	1000
06946-250084	B	black powder-coated	250	20	M8	70	270	1000
06946-300084	B	black powder-coated	300	20	M8	70	320	1000
06946-350084	B	black powder-coated	350	20	M8	70	370	1000

Pull handles tubular

adjustable

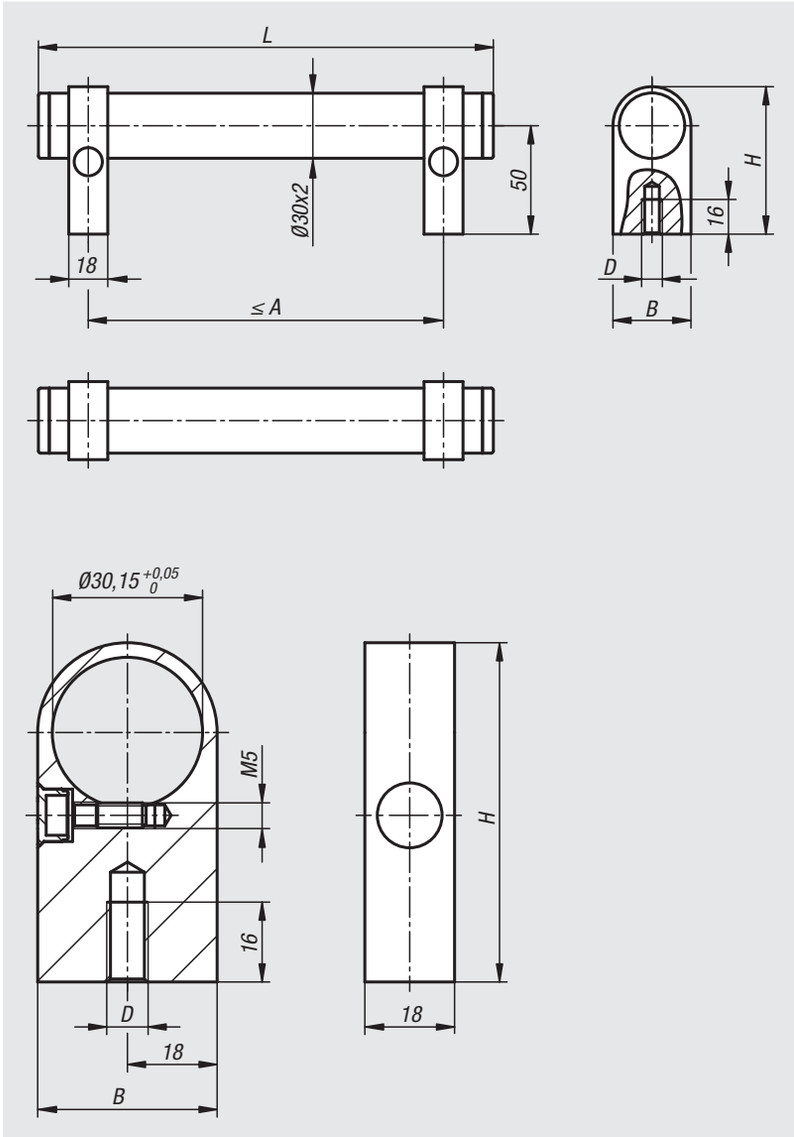

Material:
Grip tube EN AW-6060.
Mounting bracket EN AW-6063.
End caps thermoplastic.
Grub screw ISO 4766-14H.

Version:
Grip tube anodized natural tone.
Mounting brackets anodized natural tone or black.
Grip end piece, black.
Bracket end cap light grey or black.

Sample order:
nlm 06947-2503011

Note:
The adjustable tubular handles are supplied unassembled.
The centre distance for the tubular handles can be freely determined.
The recommended maximum centre distance can be found in the table under A max.
Additional mounting brackets can be included for long handle lengths or high loads.
The mounting brackets are supplied unassembled.

Tubular handles adjustable

Order No.	Main colour	Component colour	A max.	B	D	H	L	Load capacity N
06947-2503011	natural anodized	natural anodized	220	36	M8	68	250	1000
06947-3003011	natural anodized	natural anodized	270	36	M8	68	300	1000
06947-4003011	natural anodized	natural anodized	370	36	M8	68	400	1000
06947-5003011	natural anodized	natural anodized	470	36	M8	68	500	1000
06947-6003011	natural anodized	natural anodized	570	36	M8	68	600	1000
06947-2503012	natural anodized	black anodized	220	36	M8	68	250	1000
06947-3003012	natural anodized	black anodized	270	36	M8	68	300	1000
06947-4003012	natural anodized	black anodized	370	36	M8	68	400	1000
06947-5003012	natural anodized	black anodized	470	36	M8	68	500	1000
06947-6003012	natural anodized	black anodized	570	36	M8	68	600	1000

Mounting brackets

Order No.	Main colour	B	D	H
06947-08301	natural anodized	36	M8	68
06947-08302	black anodized	36	M8	68

Ledge handles stainless steel

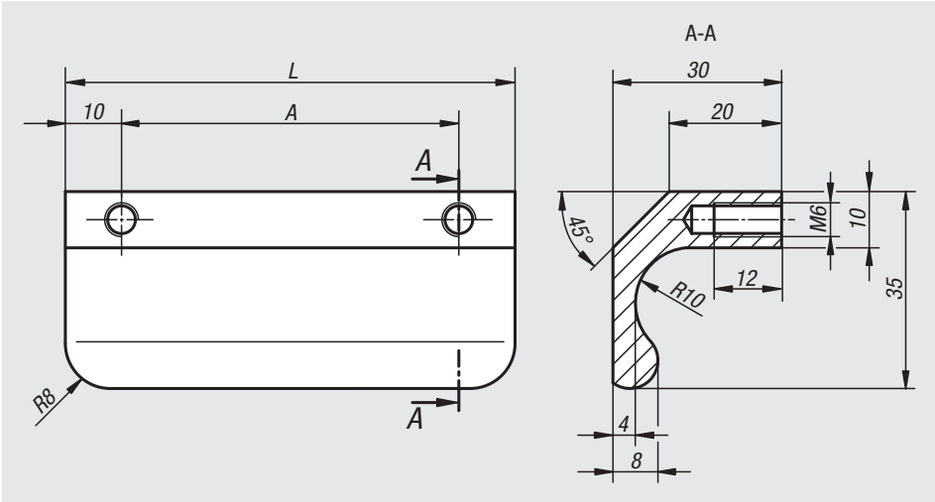

Material:
Profile stainless steel 1.4404

Version:
Abrasive cleaned and matt-gloss electropolished.

Sample order:
nlm 06951-06006

Assembly:
From the rear.

On request:
Any other lengths.

Order No.	A	L	Load capacity N
06951-06006	60	80	1000
06951-08006	80	100	1000
06951-10006	100	120	1000
06951-13006	130	150	1000

Ledge handles

Material:
Profile aluminium EN AW-6060

Version:
Matt-gloss anodized.

Sample order:
nlm 06952-086061

Note:
These ledge handles are available with M6 internal thread or with through hole for M5 countersunk screws for front mounting.

Assembly:
Form A from the rear.
Form B from the front.

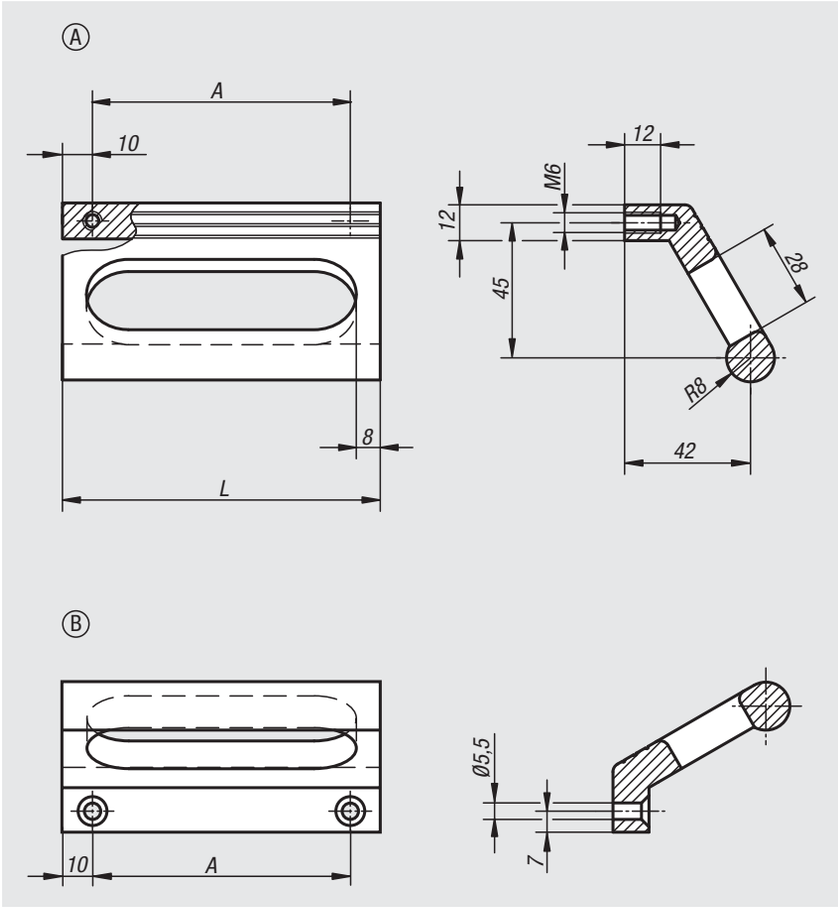

Order No.	Form	Main colour	A	L	Load capacity N
06952-086061	A	black anodized	86	106	500
06952-100061	A	black anodized	100	120	500
06952-120061	A	black anodized	120	140	500
06952-086063	A	natural anodized	86	106	500
06952-100063	A	natural anodized	100	120	500
06952-120063	A	natural anodized	120	140	500
06952-086051	B	black anodized	86	106	500
06952-100051	B	black anodized	100	120	500
06952-120051	B	black anodized	120	140	500
06952-086053	B	natural anodized	86	106	500
06952-100053	B	natural anodized	100	120	500
06952-120053	B	natural anodized	120	140	500

Tubular handles angled

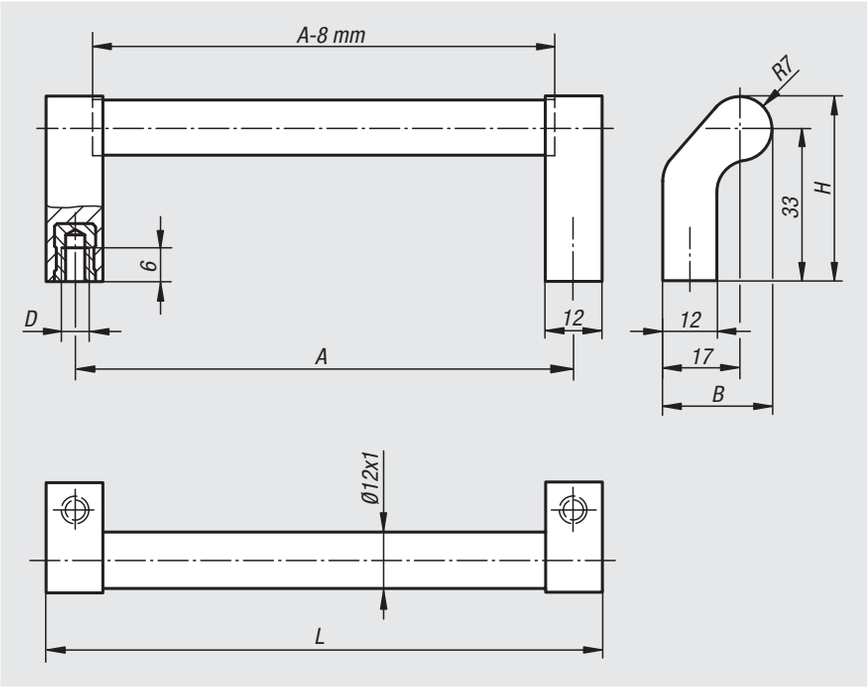

Material:
Grip aluminium EN AW-6060 or stainless steel 1.4301.
Legs polyamide glass-bead reinforced.
Bushing brass.

Version:
Grip natural colour, black anodized or finely ground stainless steel.
Legs matt black.

Sample order:
nlm 06956-088041

Note:
Clamping webs give a precision fit of tube to legs.

Assembly:
From the rear.

Order No.	Main material	Main colour	A	B	D	H	L	Load capacity N
06956-088041	aluminium	natural anodized	88	24	M4	40	100	200
06956-096041	aluminium	natural anodized	96	24	M4	40	108	200
06956-120041	aluminium	natural anodized	120	24	M4	40	132	200
06956-128041	aluminium	natural anodized	128	24	M4	40	140	200
06956-160041	aluminium	natural anodized	160	24	M4	40	172	200
06956-180041	aluminium	natural anodized	180	24	M4	40	192	200
06956-088042	aluminium	black anodized	88	24	M4	40	100	200
06956-096042	aluminium	black anodized	96	24	M4	40	108	200
06956-120042	aluminium	black anodized	120	24	M4	40	132	200
06956-128042	aluminium	black anodized	128	24	M4	40	140	200
06956-160042	aluminium	black anodized	160	24	M4	40	172	200
06956-180042	aluminium	black anodized	180	24	M4	40	192	200
06956-088043	stainless steel	ground	88	24	M4	40	100	200
06956-096043	stainless steel	ground	96	24	M4	40	108	200
06956-120043	stainless steel	ground	120	24	M4	40	132	200
06956-128043	stainless steel	ground	128	24	M4	40	140	200
06956-160043	stainless steel	ground	160	24	M4	40	172	200
06956-180043	stainless steel	ground	180	24	M4	40	192	200

Tubular handles

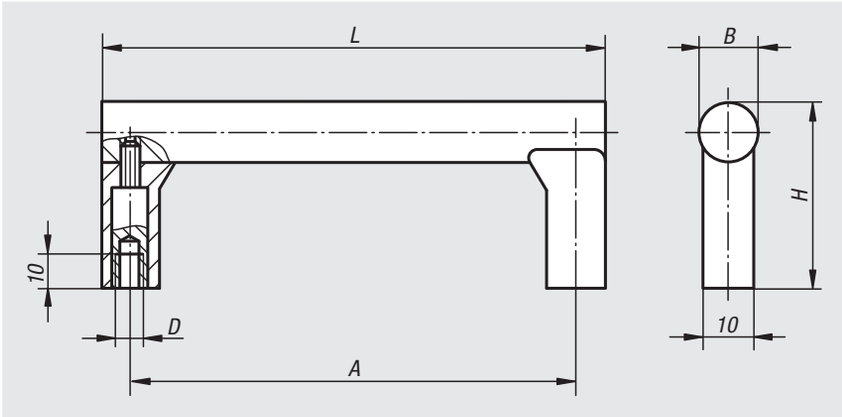

Material:
Grip aluminium EN AW-6060.
Legs polyamide glass-bead reinforced.
Bushing brass.

Version:
Grip fine ground and natural colour or black anodized.
Legs aluminium colour or black.

Sample order:
nlm 06958-1055041

Note:
Grip and legs are screwed securely together.

Assembly:
From the rear.

Order No. natural anodized	Order No. black anodized	Component colour	A	B	D	H	L	Load capacity N
06958-1055041	**06958-1055043**	aluminium tone	55	12	M4	37	67	300
06958-1088041	**06958-1088043**	aluminium tone	88	12	M4	37	100	300
06958-1100041	**06958-1100043**	aluminium tone	100	12	M4	37	112	300
06958-1120041	**06958-1120043**	aluminium tone	120	12	M4	37	132	300
06958-1180041	**06958-1180043**	aluminium tone	180	12	M4	37	192	300
06958-1055042	**06958-1055044**	black	55	12	M4	37	67	300
06958-1088042	**06958-1088044**	black	88	12	M4	37	100	300
06958-1100042	**06958-1100044**	black	100	12	M4	37	112	300
06958-1120042	**06958-1120044**	black	120	12	M4	37	132	300
06958-1180042	**06958-1180044**	black	180	12	M4	37	192	300

Pull handles

open-ended screw on

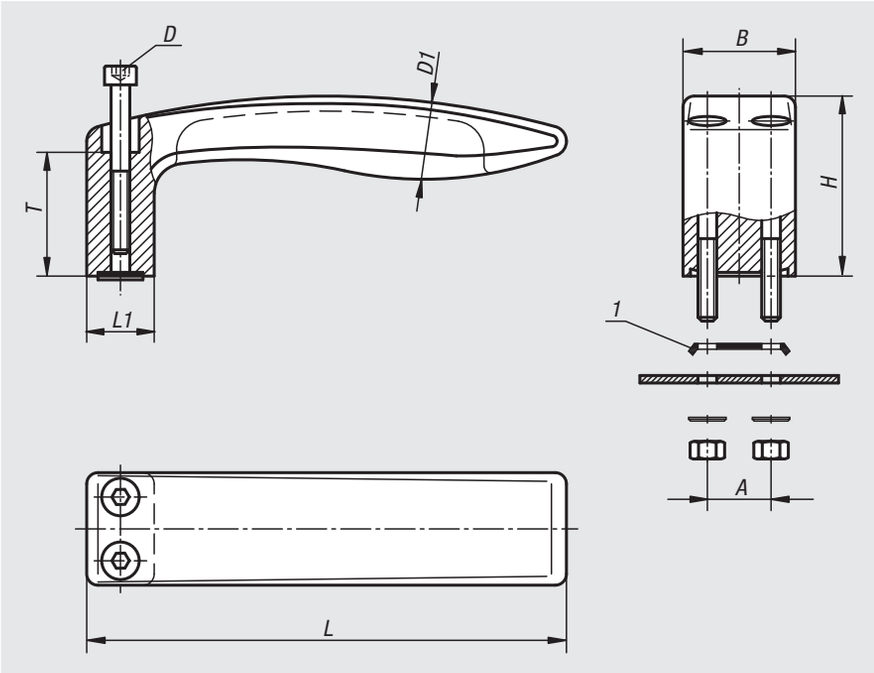

Material:
Glass-bead reinforced thermoplastic.
Fastening material 1.4301.

Version:
Matt black with fine texture.

Sample order:
nlm 06959-12805

Note:
These open-ended handles can be mounted right or left. They are form stable and have a high load rating. Fastening bolts, nuts and washers are supplied as is a locking plate to prevent twisting.

Assembly:
From the front.

Drawing reference:
1) locking plate

Order No.	A	B	D	D1	H	L	L1	T	Load capacity N
06959-12805	17	30	M5x45	20	48	128	18	33	800
06959-15606	20	36	M6x55	24	58	156	22	40	1000

Recessed handles

Material:
Grip aluminium profile.
End caps polyamide.
Form A: rubber profile for mounting.
Form B: 2 steel countersunk screws for mounting.

Version:
Handle glass-bead blasted, satin finish and black anodized or natural colour anodized.
Rubber profile black.
Fastening screws galvanized.

Sample order:
nlm 06960-10011

Note:
The Form A handles can be mounted without screws by material thicknesses of 1 - 2.5 mm. Two rubber profiles ensure an absolutely firm hold.
The Form B handles can be mounted from the front with 2 countersunk screws.

Two cross-slots offset by 90° for M4 screws allow an earthing cable to be connected and can serve as mounting aids for additional parts.

Assembly:
After fitting the lower rubber profile, press the two side caps onto the handle. Next press the handle over the lower edge of the mounting cutout at a 45° angle and then push it up against the housing panel.
Now, depending on which type is being used, push the 2nd rubber profile into the upper groove or fix in place with 2 countersunk screws.

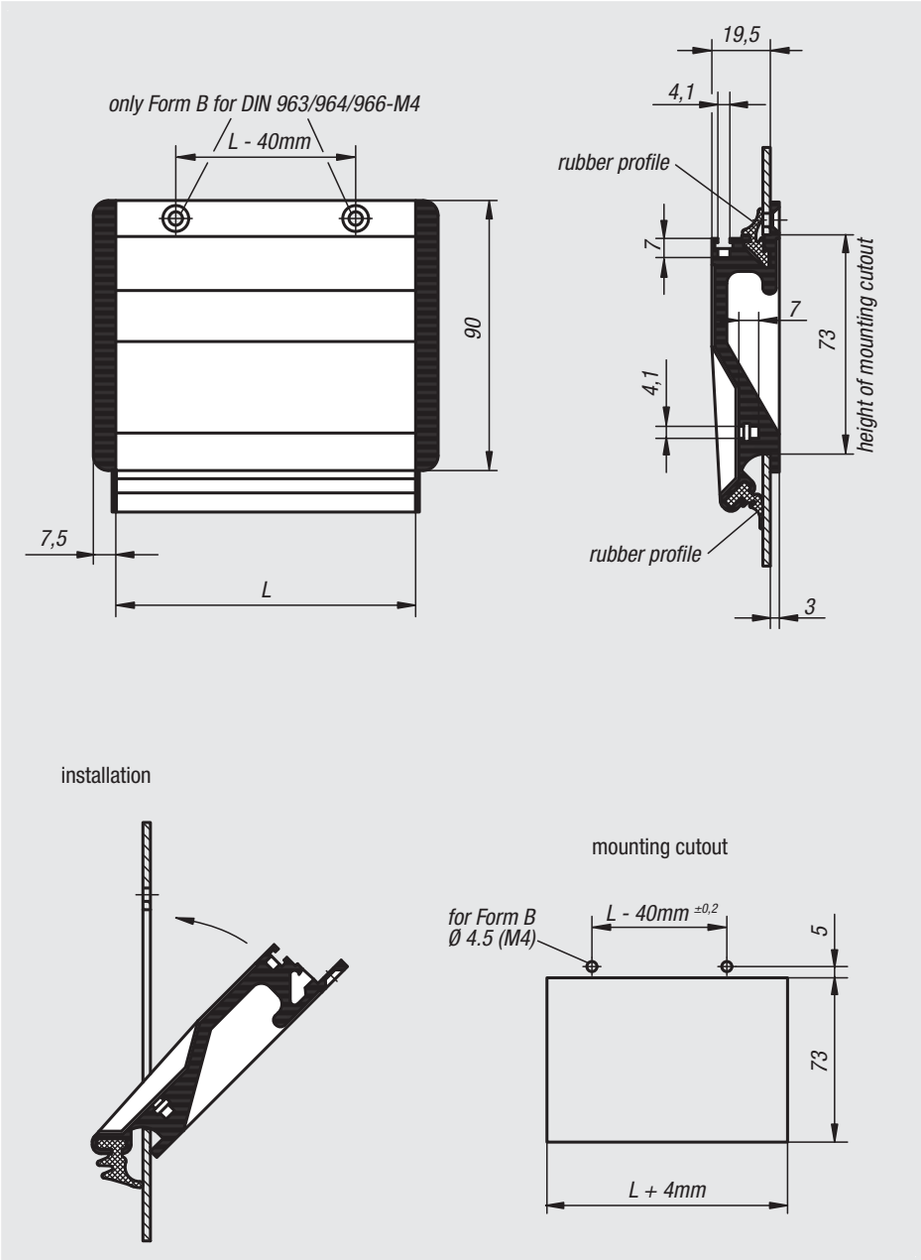

Order No. black anodized	Order No. natural anodized	Form	L	Mounting cutout	Load capacity N
06960-10011	06960-10013	A	100	104 x 73	500
06960-11811	06960-11813	A	118	122 x 73	500
06960-16711	06960-16713	A	167	171 x 73	500
06960-10021	06960-10023	B	100	104 x 73	500
06960-11821	06960-11823	B	118	122 x 73	500
06960-16721	06960-16723	B	167	171 x 73	500

Recessed handles fold-down

Material:
Tray and grip aluminium profile.
End caps polyamide.
Form A: Rubber profile for mounting.
Form B: 2 steel countersunk screws for mounting.

Version:
Tray and grip glass-bead blasted, satin finish and black anodized or natural colour anodized.
Rubber profile black.
Fastening screws galvanized

Sample order:
nlm 06961-10011

Note:
Form A handles can be mounted without screws for material thicknesses of 1 - 2.5 mm using 2 rubber profiles.
Form B handles can be mounted from the front with 2 countersunk screws.
Two cross-slots for M4 screws allow earthing connection and can serve as a mounting aid for additional parts.

Assembly:
After fitting the lower rubber profile, press the two side caps onto the handle. Next press the handle over the lower edge of the mounting cutout at a 45° angle and then push it up against the housing panel.
Now push the 2nd rubber profile into the upper groove or fix in place with 2 countersunk screws.

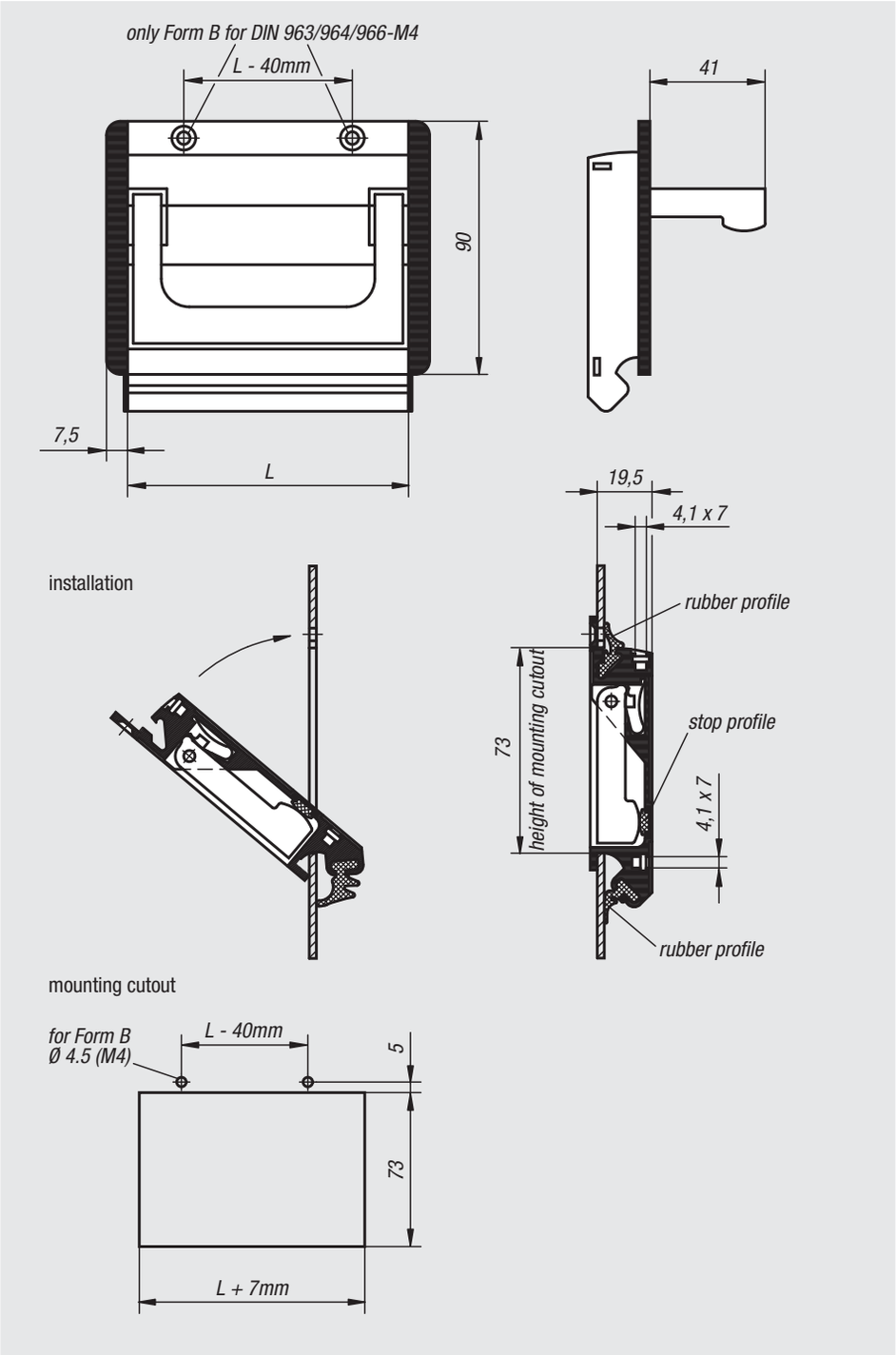

Order No. black anodized	Order No. natural anodized	Form	L	Mounting cutout	Load capacity N
06961-10011	**06961-10013**	A	100	107 x 73	500
06961-11811	**06961-11813**	A	118	125 x 73	500
06961-16711	**06961-16713**	A	167	174 x 73	500
06961-10021	**06961-10023**	B	100	107 x 73	500
06961-11821	**06961-11823**	B	118	125 x 73	500
06961-16721	**06961-16723**	B	167	174 x 73	500

Recessed handles

fold-down, stainless steel

Material:
Stainless steel 1.4301.

Version:
High-gloss electropolished.

Sample order:
nlm 06961-01-132

Note:
Stainless steel retractable grips with marginal installation depth. For base and mounting plates or drawers. With return spring. The grip automatically swivels back into its resting position after use.

Drawing reference:
1) for countersunk screws M4

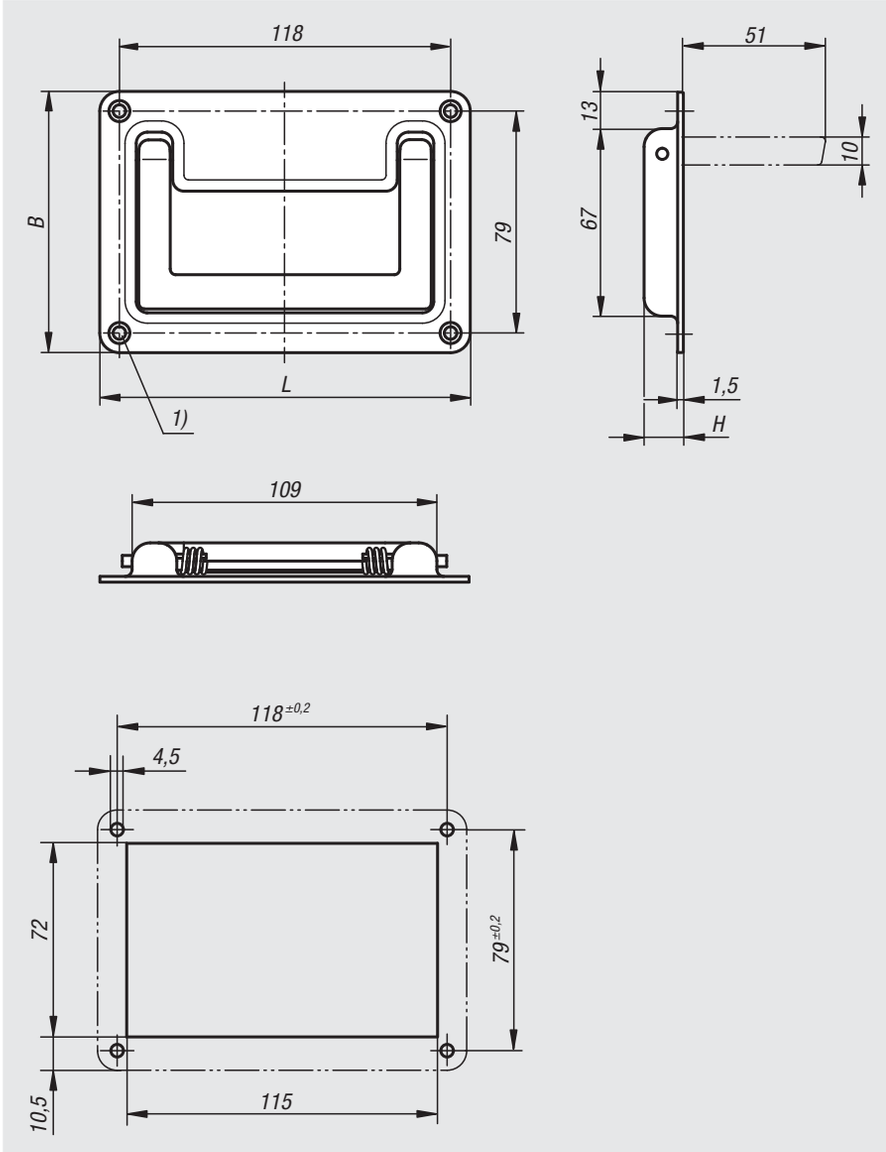

Order No.	B	H	L
06961-01-132	93	13,5	132

Recessed handles fold-down

Material:
Die-cast aluminium.

Version:
Tray and handle black or light grey powder-coated, semi-matt.

Sample order:
nlm 06962-05018411

Note:
With their modern design recessed fold-down handles can be used wherever solid and attractive handles are required.
Handles Form A snap into both resting and working positions.
Handles Form B swivel back into the resting position automatically after use.

Assembly:
The handles can be installed from the front or rear of the housing panel with the same housing cutout.

Drawing reference:
Form A
handle snap locks into working
and resting positions.
Form B
handle swivels automatically
back into resting position. 1) for countersunk screws M4

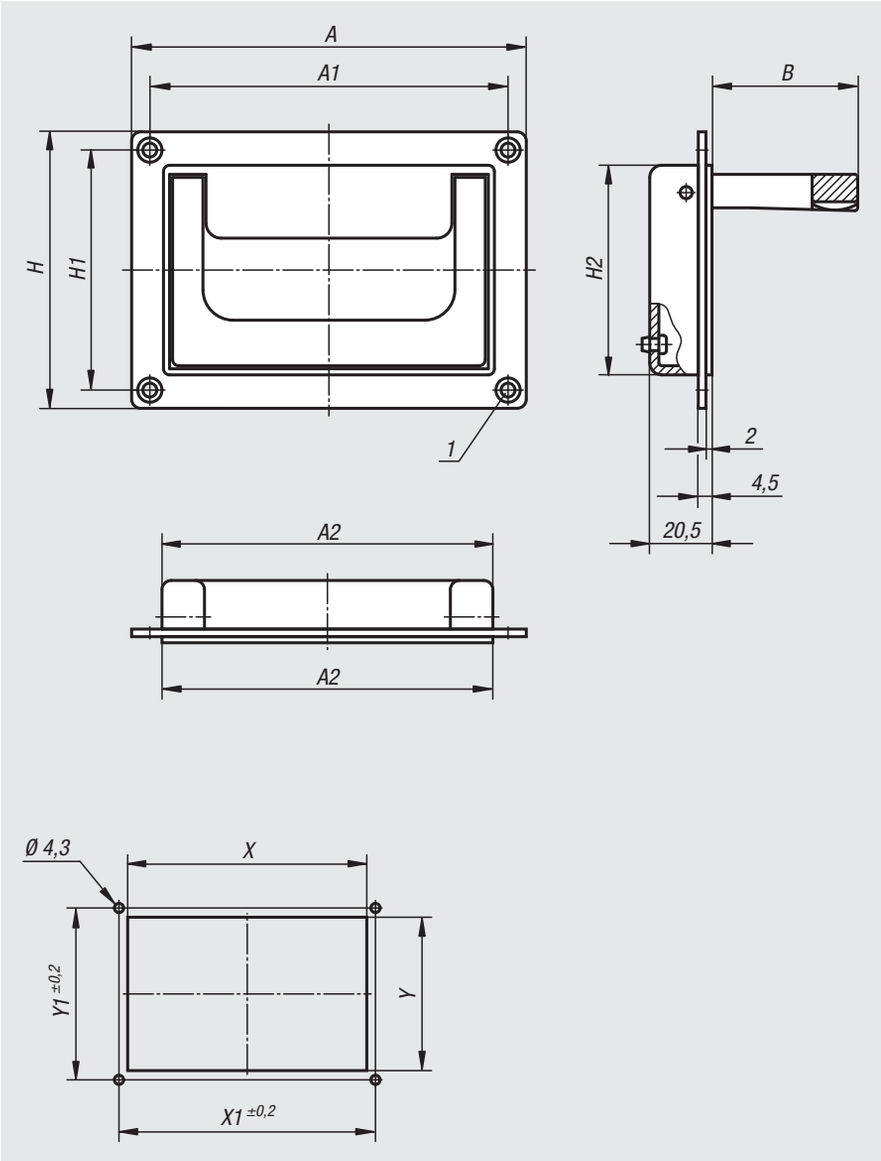

Order No.	Form	Version	A	A1	A2	B	H	H1	H2	X	X1	Y	Y1	Load capacity N
06962-07911811	A	black powder-coated	130	118	109	48	91	79	69	110	118	70,5	79	500
06962-05018411	A	black powder-coated	200	184	170	51	80	50	72	171	184	73	50	500
06962-07911812	A	light grey powder-coated	130	118	109	48	91	79	69	110	118	70,5	79	500
06962-05018412	A	light grey powder-coated	200	184	170	51	80	50	72	171	184	73	50	500
06962-07911821	B	black powder-coated	130	118	109	48	91	79	69	110	118	70,5	79	500
06962-05018421	B	black powder-coated	200	184	170	51	80	50	72	171	184	73	50	500
06962-07911822	B	light grey powder-coated	130	118	109	48	91	79	69	110	118	70,5	79	500
06962-05018422	B	light grey powder-coated	200	184	170	51	80	50	72	171	184	73	50	500

Recessed handles

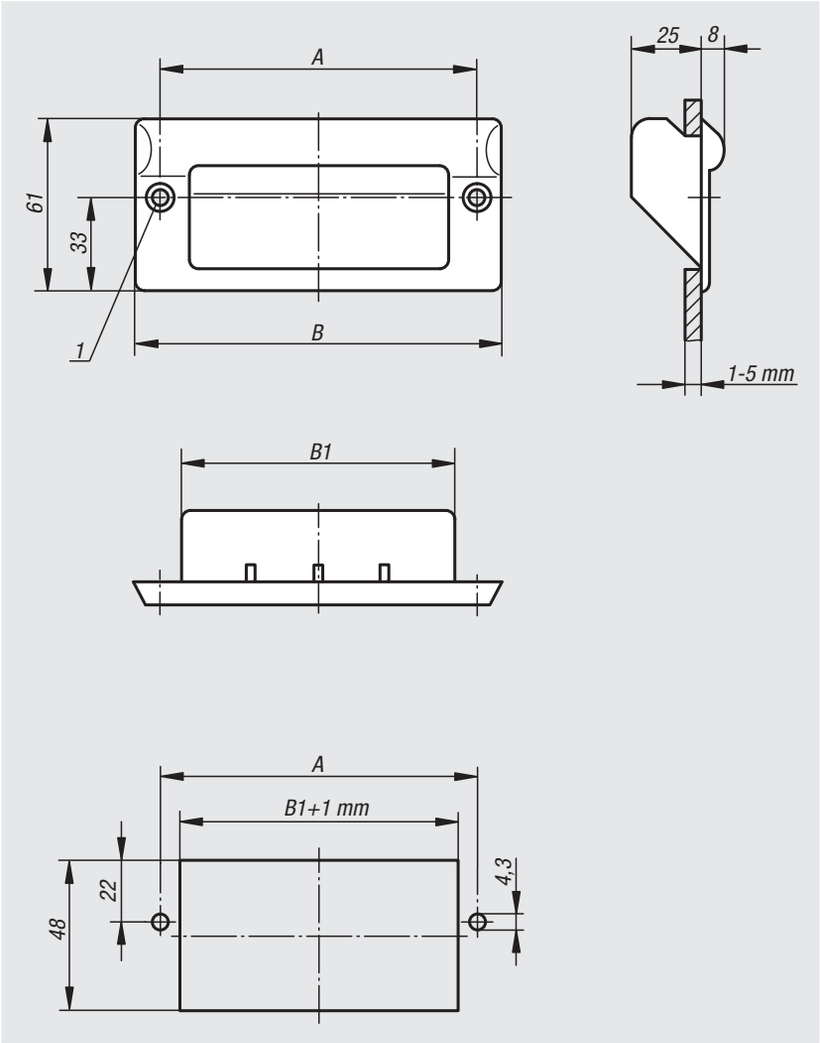

Material:
Glass bead reinforced thermoplastic

Version:
Semi-matt, black or light grey.

Sample order:
nlm 06965-1082041

Note:
These ergonomically shaped handles are ideally suited for wall thicknesses of 1-5 mm.

Assembly:
The handle is inserted in the cutout of the housing panel and then fixed from the front with 2 countersunk screws (not supplied).

Drawing reference:
1) for countersunk screws M4

Order No.	Main colour	A	B	B1	Load capacity N
06965-1082041	black	82	100	67	1000
06965-1112041	black	112	130	97	1000
06965-1082042	light grey RAL 7035	82	100	67	1000
06965-1112042	light grey RAL 7035	112	130	97	1000

Recessed grips

clip-in

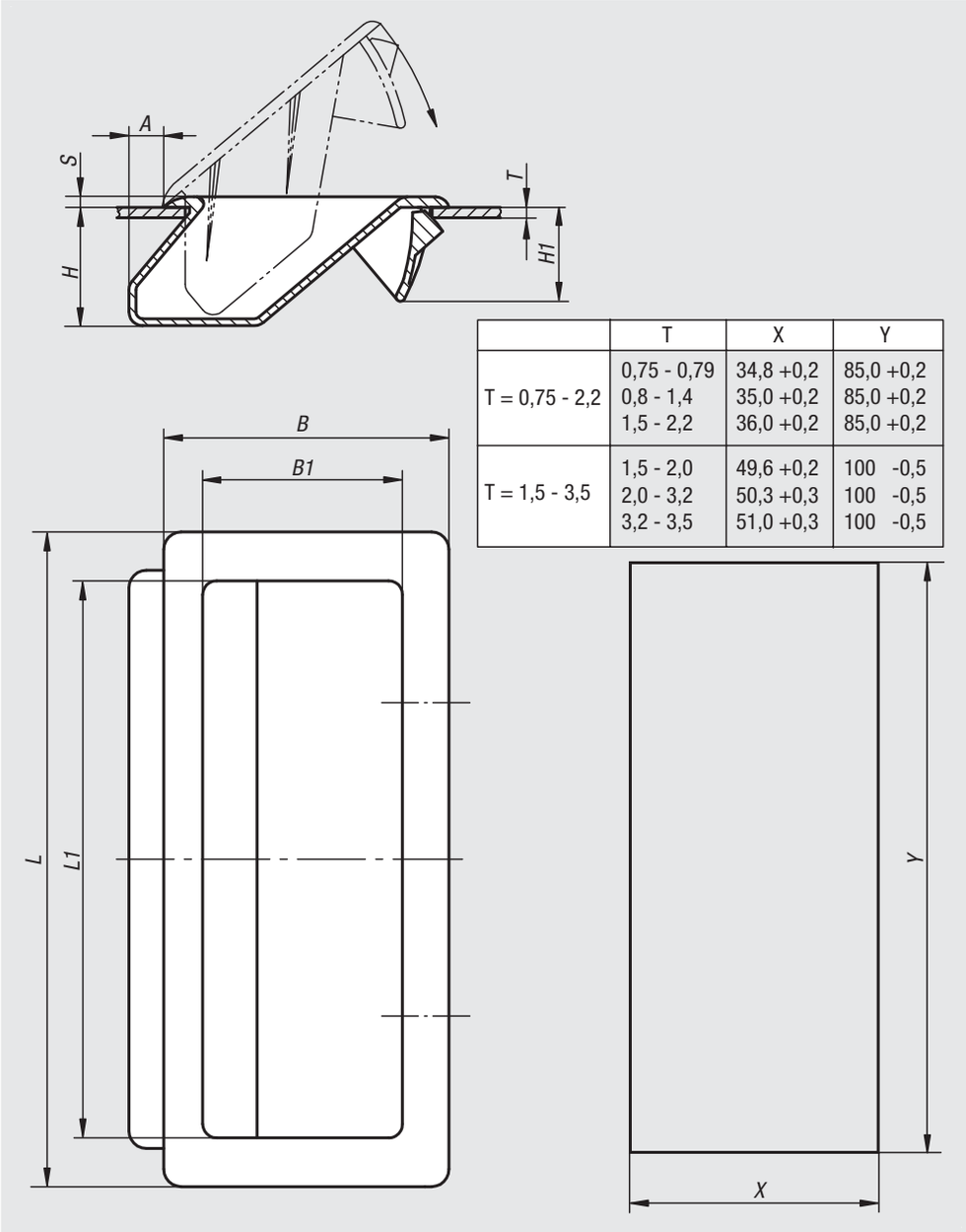

	T	X	Y
T = 0,75 - 2,2	0,75 - 0,79 0,8 - 1,4 1,5 - 2,2	34,8 +0,2 35,0 +0,2 36,0 +0,2	85,0 +0,2 85,0 +0,2 85,0 +0,2
T = 1,5 - 3,5	1,5 - 2,0 2,0 - 3,2 3,2 - 3,5	49,6 +0,2 50,3 +0,3 51,0 +0,3	100 -0,5 100 -0,5 100 -0,5

Material:
Polyamide

Version:
black.

Sample order:
nlm 06966-01-09441

Note:
Recessed grips for clipping into material with a thickness 0.75 to 3.5 mm.

See drawing for installation cut-out dimensions for the various material thicknesses.

Order No.	A	B	B1	H	H1	L	L1	S
06966-01-09441	5	41	28,7	17	13,5	94	80	1,5
06966-01-11057	10	57	40,3	26	18,65	110	94	2

Recessed handles fold-down

stainless steel

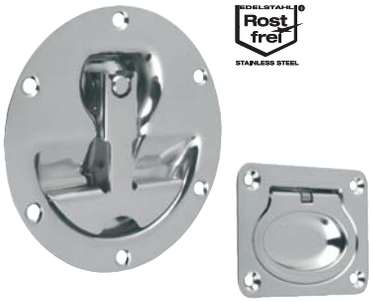

Material:
Stainless steel 1.4301.

Version:
High-gloss electropolished.

Sample order:
nlm 06970-1120000

Note:
Stainless steel retractable grips with marginal installation depth. For base and mounting plates or drawers. With return spring. The grip automatically swivels back into its resting position after use.

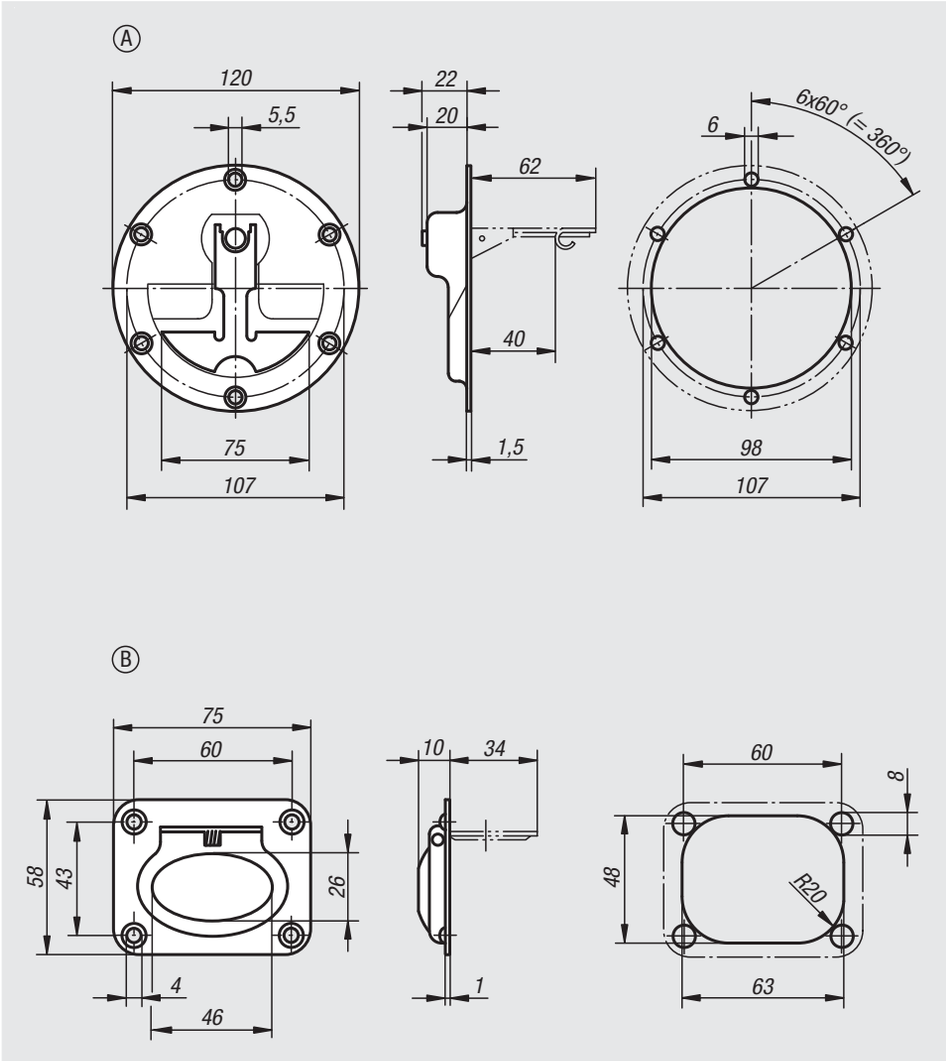

Order No.	Form	Load capacity N
06970-1120000	A	200
06970-2075058	B	200

Recessed handles, fold down

DIN 3136

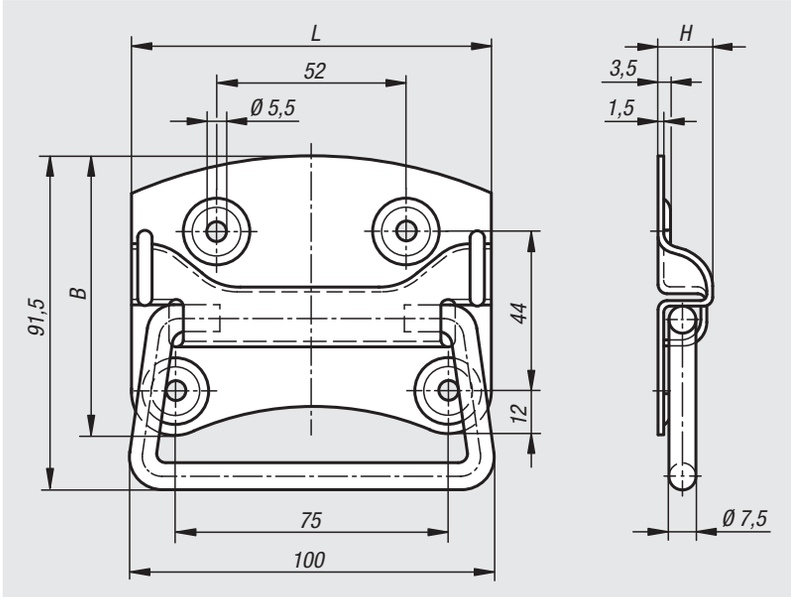

Material:
Stainless steel 1.4301.

Version:
Bright.

Sample order:
nlm 06970-01-100

Applications:
Crates, chests, lids.

Order No.	B	H	L	Load capacity N
06970-01-100	77	14	100	500

Pull handles angled

Material:
Glass-bead reinforced thermoplastic PA

Version:
black.

Sample order:
nlm 06975-100081
nlm 06975-1 (caps, 2 per pack)

Note:
Ergonomic design pull handles with finger shield. For mounting on doors, hatches and aluminium profiles. Ideal for double-leaf doors. Fastening with hexagon or socket head M8 bolts.

Cover caps are not supplied with the handle, please order separately.

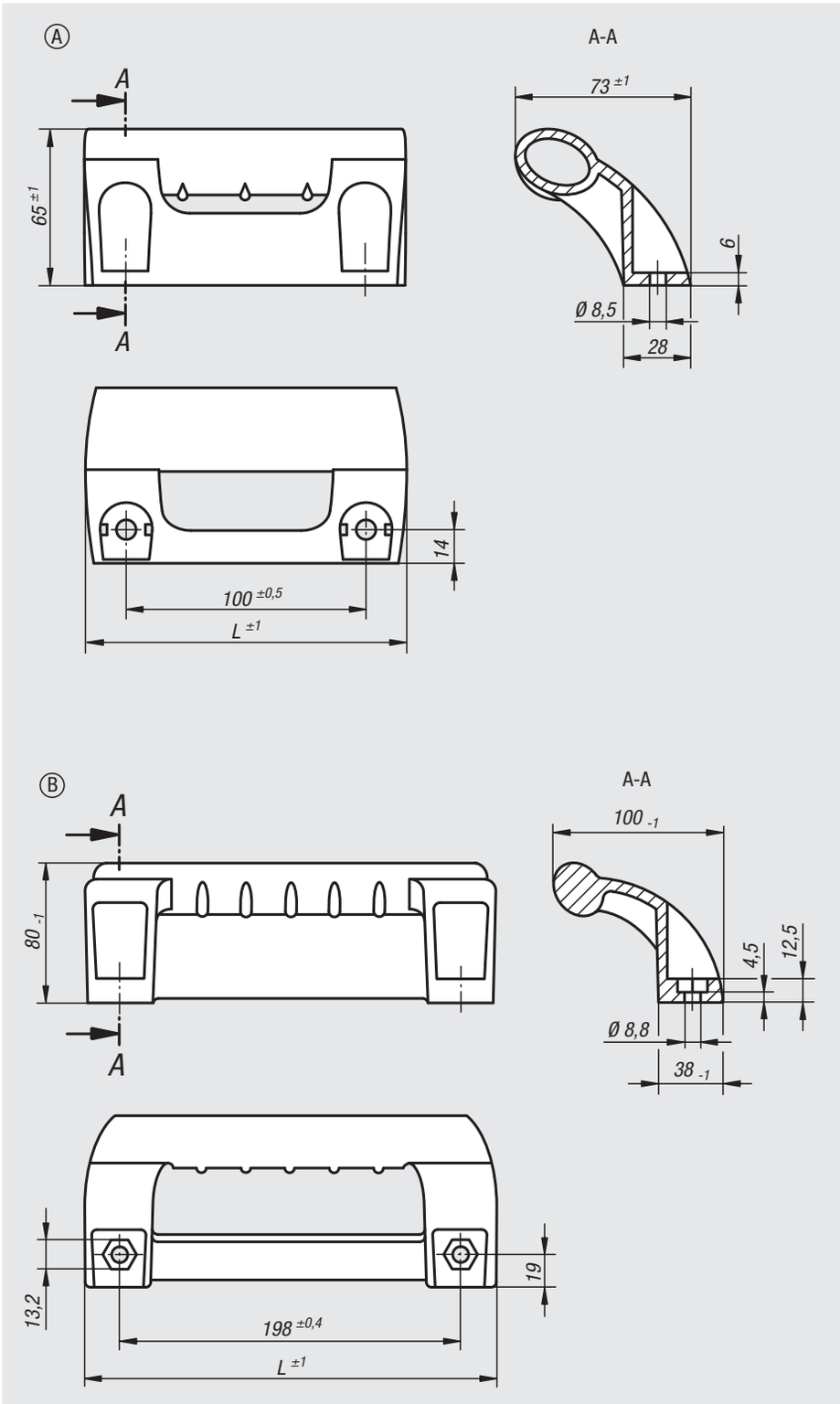

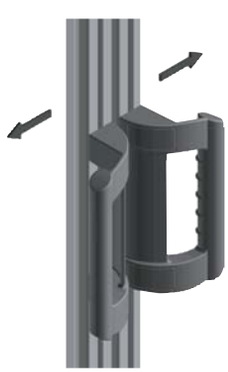

Order No.	Form	L	Load capacity N	Order No. cover caps
06975-100081	A	134	1000	06975-1
06975-198081	B	236	1000	06975-3

Notes

07000

Fasteners
Ball-end thrust screws
Thrust screws and thrust pads
Grippers
Torque bolts
Threaded inserts
Lifting bolts
Swivel bales
Ring bolts

Notes

Studs

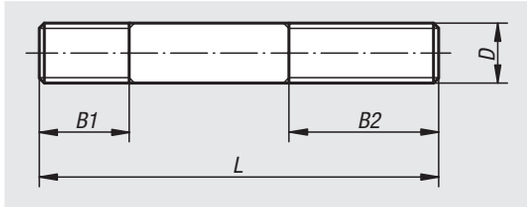

Material:
Carbon steel 1.1181.

Version:
Tempered to 8.8 and black oxidised.

Sample order:
nlm 07020-308

Note:
Permissible loading see Technical Information.
Thread end with oval point is permissible.

On request:
Stainless steel.

Order No.	D	L	B1	B2
07020-105	M5	20	7	10
07020-205	M5	30	7	10
07020-106	M6	25	10	12
07020-206	M6	35	10	12
07020-306	M6	45	10	12
07020-406	M6	60	10	12
07020-108	M8	40	12	25
07020-208	M8	50	12	25
07020-308	M8	70	12	25
07020-408	M8	80	12	25
07020-110	M10	50	15	30
07020-210	M10	67	15	30
07020-310	M10	80	15	30
07020-410	M10	100	15	30
07020-112	M12	56	18	30
07020-212	M12	67	18	30
07020-312	M12	80	18	30
07020-412	M12	100	18	30
07020-512	M12	125	18	30
07020-114	M14	60	20	30
07020-214	M14	80	20	30
07020-314	M14	100	20	30
07020-414	M14	125	20	30
07020-514	M14	150	20	30
07020-116	M16	75	25	30
07020-216	M16	100	25	30
07020-316	M16	125	25	30
07020-416	M16	150	25	30
07020-120	M20	100	30	40
07020-220	M20	125	30	40
07020-320	M20	150	30	40
07020-420	M20	180	30	40

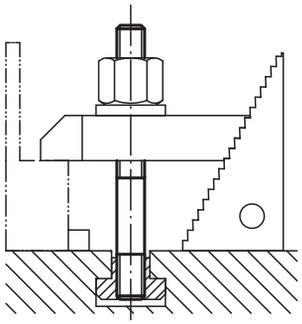

Studs

DIN 6379

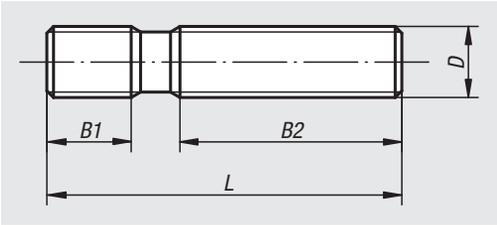

Material:
Carbon steel.

Version:
Thread rolled.
M6-M12 tempered to 10.9, black.
M14-M36 tempered to 8.8, black.

Sample order:
nlm 07030-12125

Note:
Permissible load: see Technical Information.

Order No.	D	L	B1	B2
07030-0632	M6	32	9	16
07030-0640	M6	40	9	20
07030-0650	M6	50	9	30
07030-0663	M6	63	9	40
07030-0680	M6	80	9	50
07030-06100	M6	100	9	63
07030-0840	M8	40	11	20
07030-0863	M8	63	11	40
07030-0880	M8	80	11	50
07030-08100	M8	100	11	63
07030-08125	M8	125	11	75
07030-08160	M8	160	11	100
07030-1050	M10	50	13	25
07030-1080	M10	80	13	50
07030-10100	M10	100	13	75
07030-10125	M10	125	13	75
07030-10160	M10	160	13	100
07030-10200	M10	200	13	125
07030-1250	M12	50	15	25
07030-1263	M12	63	15	32
07030-1280	M12	80	15	50
07030-12100	M12	100	15	63
07030-12125	M12	125	15	75
07030-12160	M12	160	15	100
07030-12200	M12	200	15	125
07030-1463	M14	63	17	32
07030-1480	M14	80	17	50
07030-14100	M14	100	17	63
07030-14125	M14	125	17	75
07030-14160	M14	160	17	100
07030-14200	M14	200	17	125
07030-14250	M14	250	17	160
07030-1663	M16	63	19	32
07030-1680	M16	80	19	50
07030-16100	M16	100	19	63
07030-16125	M16	125	19	75
07030-16160	M16	160	19	100
07030-16200	M16	200	19	125
07030-16250	M16	250	19	160
07030-16315	M16	315	19	180
07030-16350	M16	350	19	200
07030-16500	M16	500	20	315

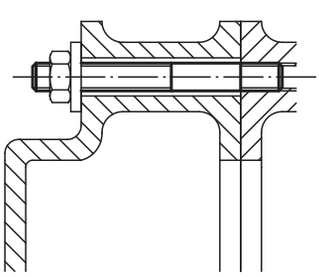

Studs

DIN 6379

Order No.	D	L	B1	B2
07030-1880	M18	80	23	50
07030-18125	M18	125	23	75
07030-18160	M18	160	23	100
07030-18200	M18	200	23	125
07030-18250	M18	250	23	150
07030-18315	M18	315	23	180
07030-2080	M20	80	27	32
07030-20125	M20	125	27	70
07030-20160	M20	160	27	100
07030-20200	M20	200	27	125
07030-20250	M20	250	27	160
07030-20315	M20	315	27	200
07030-20400	M20	400	27	250
07030-20500	M20	500	27	315
07030-22100	M22	100	31	45
07030-22160	M22	160	31	100
07030-22200	M22	200	31	125
07030-22250	M22	250	31	160
07030-22315	M22	315	31	180
07030-22400	M22	400	31	250
07030-24100	M24	100	35	45
07030-24125	M24	125	35	63
07030-24160	M24	160	35	100
07030-24200	M24	200	35	125
07030-24250	M24	250	35	160
07030-24315	M24	315	35	200
07030-24400	M24	400	35	250
07030-24500	M24	500	35	315
07030-24630	M24	630	35	315
07030-27125	M27	125	39	56
07030-27200	M27	200	39	125
07030-27315	M27	315	39	200
07030-27400	M27	400	39	250
07030-27500	M27	500	39	315
07030-30125	M30	125	43	56
07030-30200	M30	200	43	125
07030-30315	M30	315	43	200
07030-30500	M30	500	43	315
07030-30700	M30	700	43	400
07030-301000	M30	1000	44	400
07030-36160	M36	160	51	80
07030-36200	M36	200	51	125
07030-36250	M36	250	51	160
07030-36315	M36	315	51	200
07030-36400	M36	400	51	250
07030-36500	M36	500	51	315
07030-36700	M36	700	51	400

T-slot bolts

DIN 787

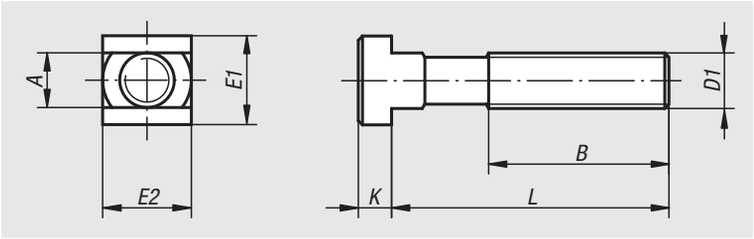

Material:
Carbon steel.

Version:
Forged and milled, rolled thread.
M6-M12 tempered to 10.9, black.
M14-M36 tempered to 8.8, black.

Sample order:
nlm 07040-1263

Note:
Permissible load: see Technical Information.

Order No.	Nominal slot size	D1	L	A	B	E1/E2	K
07040-0625	6	M6	25	5,7	15	10	4
07040-0640	6	M6	40	5,7	28	10	4
07040-0663	6	M6	63	5,7	40	10	4
07040-0832	8	M8	32	7,7	22	13	6
07040-0850	8	M8	50	7,7	35	13	6
07040-0880	8	M8	80	7,7	50	13	6
07040-1040	10	M10	40	9,7	30	15	6
07040-1063	10	M10	63	9,7	45	15	6
07040-10100	10	M10	100	9,7	60	15	6
07040-1250	12	M12	50	11,7	35	18	7
07040-1263	12	M12	63	11,7	40	18	7
07040-1280	12	M12	80	11,7	55	18	7
07040-12100	12	M12	100	11,7	65	18	7
07040-12125	12	M12	125	11,7	75	18	7
07040-12160	12	M12	160	11,7	100	18	7
07040-12200	12	M12	200	11,7	120	18	7
07040-1450	14	M12	50	13,7	35	22	8
07040-1463	14	M12	63	13,7	45	22	8
07040-1480	14	M12	80	13,7	55	22	8
07040-14100	14	M12	100	13,7	65	22	8
07040-14125	14	M12	125	13,7	75	22	8
07040-14160	14	M12	160	13,7	100	22	8
07040-14200	14	M12	200	13,7	120	22	8
07040-16631	16	M14	63	15,7	45	25	9
07040-16801	16	M14	80	15,7	55	25	9
07040-161001	16	M14	100	15,7	65	25	9
07040-161251	16	M14	125	15,7	75	25	9
07040-161601	16	M14	160	15,7	100	25	9
07040-162501	16	M14	250	15,7	150	25	9
07040-1663	16	M16	63	15,7	45	25	9
07040-1680	16	M16	80	15,7	55	25	9
07040-16100	16	M16	100	15,7	65	25	9
07040-16125	16	M16	125	15,7	85	25	9
07040-16160	16	M16	160	15,7	100	25	9
07040-16200	16	M16	200	15,7	125	25	9
07040-16250	16	M16	250	15,7	150	25	9
07040-1863	18	M16	63	17,7	45	28	10
07040-1880	18	M16	80	17,7	55	28	10
07040-18100	18	M16	100	17,7	65	28	10
07040-18125	18	M16	125	17,7	85	28	10
07040-18160	18	M16	160	17,7	100	28	10

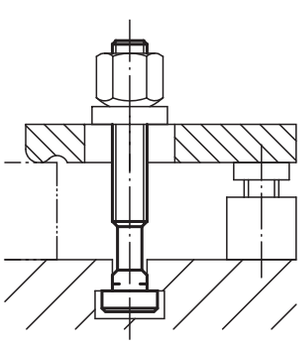

T-slot bolts

DIN 787

Order No.	Nominal slot size	D1	L	A	B	E1/E2	K
07040-18200	18	M16	200	17,7	125	28	10
07040-18250	18	M16	250	17,7	150	28	10
07040-2080	20	M20	80	19,7	55	32	12
07040-20100	20	M20	100	19,7	65	32	12
07040-20125	20	M20	125	19,7	85	32	12
07040-20160	20	M20	160	19,7	110	32	12
07040-20200	20	M20	200	19,7	125	32	12
07040-20250	20	M20	250	19,7	150	32	12
07040-20315	20	M20	315	19,7	190	32	12
07040-2280	22	M20	80	21,7	55	35	14
07040-22100	22	M20	100	21,7	65	35	14
07040-22125	22	M20	125	21,7	85	35	14
07040-22160	22	M20	160	21,7	110	35	14
07040-22200	22	M20	200	21,7	125	35	14
07040-22250	22	M20	250	21,7	150	35	14
07040-22315	22	M20	315	21,7	190	35	14
07040-24100	24	M24	100	23,7	70	40	16
07040-24125	24	M24	125	23,7	85	40	16
07040-24160	24	M24	160	23,7	110	40	16
07040-24200	24	M24	200	23,7	125	40	16
07040-24250	24	M24	250	23,7	150	40	16
07040-24315	24	M24	315	23,7	190	40	16
07040-24400	24	M24	400	23,7	240	40	16
07040-28100	28	M24	100	27,7	70	44	18
07040-28125	28	M24	125	27,7	85	44	18
07040-28160	28	M24	160	27,7	110	44	18
07040-28200	28	M24	200	27,7	125	44	18
07040-28250	28	M24	250	27,7	150	44	18
07040-28315	28	M24	315	27,7	190	44	18
07040-28400	28	M24	400	27,7	240	44	18
07040-36125	36	M30	125	35,6	80	54	22
07040-36160	36	M30	160	35,6	110	54	22
07040-36200	36	M30	200	35,6	135	54	22
07040-36250	36	M30	250	35,6	150	54	22
07040-36315	36	M30	315	35,6	200	54	22
07040-36500	36	M30	500	35,6	300	54	22
07040-42160	42	M36	160	41,6	100	65	26
07040-42250	42	M36	250	41,6	175	65	26
07040-42400	42	M36	400	41,6	250	65	26

T-slot bolts

DIN 787, 12.9

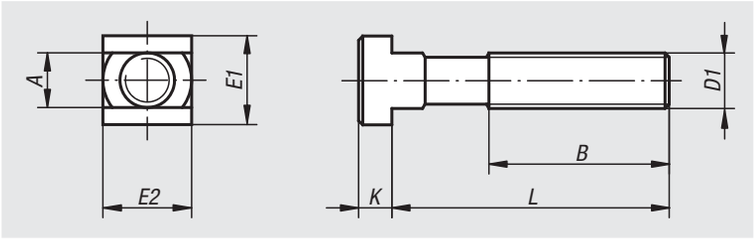

Material:
Carbon steel.

Version:
Forged and milled, rolled thread, tempered to 12.9, black.

Sample order:
nlm 07040-112125

Note:
Permissible load: see Technical Information.

Order No.	Nominal slot size	D1	L	A	B	E1/E2	K
07040-11250	12	M12	50	11,7	35	18	7
07040-11280	12	M12	80	11,7	55	18	7
07040-112100	12	M12	100	11,7	65	18	7
07040-112125	12	M12	125	11,7	75	18	7
07040-112160	12	M12	160	11,7	100	18	7
07040-112200	12	M12	200	11,7	120	18	7
07040-11450	14	M12	50	13,7	35	22	8
07040-11480	14	M12	80	13,7	55	22	8
07040-114100	14	M12	100	13,7	65	22	8
07040-114125	14	M12	125	13,7	75	22	8
07040-114160	14	M12	160	13,7	100	22	8
07040-114200	14	M12	200	13,7	120	22	8
07040-11663	16	M16	63	15,7	45	25	9
07040-116100	16	M16	100	15,7	65	25	9
07040-116125	16	M16	125	15,7	85	25	9
07040-116160	16	M16	160	15,7	100	25	9
07040-116250	16	M16	250	15,7	150	25	9
07040-11863	18	M16	63	17,7	45	28	10
07040-118100	18	M16	100	17,7	65	28	10
07040-118125	18	M16	125	17,7	85	28	10
07040-118160	18	M16	160	17,7	100	28	10
07040-118250	18	M16	250	17,7	150	28	10
07040-12080	20	M20	80	19,7	55	32	12
07040-120125	20	M20	125	19,7	85	32	12
07040-120200	20	M20	200	19,7	125	32	12
07040-120315	20	M20	315	19,7	190	32	12
07040-12280	22	M20	80	21,7	55	35	14
07040-122125	22	M20	125	21,7	85	35	14
07040-122200	22	M20	200	21,7	125	35	14
07040-122315	22	M20	315	21,7	190	35	14
07040-124100	24	M24	100	23,7	70	40	16
07040-124160	24	M24	160	23,7	110	40	16
07040-124250	24	M24	250	23,7	150	40	16
07040-124400	24	M24	400	23,7	240	40	16
07040-128100	28	M24	100	27,7	70	44	18
07040-128160	28	M24	160	27,7	110	44	18
07040-128250	28	M24	250	27,7	150	44	18
07040-128400	28	M24	400	27,7	240	44	18

Nuts for T-slots

DIN 508 enhanced

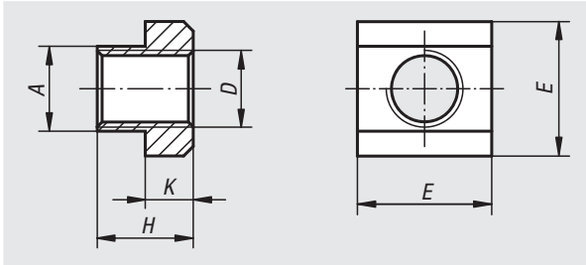

Material:
Carbon steel grade 10, EN AW-7075 or stainless steel 1.4305.

Version:
Steel black.
Aluminium and stainless steel bright.

Sample order:
nlm 07060-20

Note:
Nuts for T-slots in aluminium have threaded steel inserts.

Order No. high carbon steel	Order No. aluminium	Order No. stainless steel	Nominal slot size	D	A	E	H	K
07060-05	07060-204	-	6	M5/M4	5,6	10	8	4
07060-06	07060-206	07060-806	8	M6	7,6	13	10	6
07060-061	07060-2061	-	10	M6	9,6	15	12	6
07060-08	-	07060-808	10	M8	9,6	15	12	6
07060-081	07060-208	-	12	M8	11,5	18	14	7
07060-10	-	07060-810	12	M10	11,5	18	14	7
07060-082	-	-	14	M8	13,5	22	16	8
07060-101	07060-210	-	14	M10	13,5	22	16	8
07060-12	-	07060-812	14	M12	13,5	22	16	8
07060-121	-	-	16	M12	15,6	25	18	9
07060-14	-	07060-814	16	M14	15,6	25	18	9
07060-122	-	-	18	M12	17,5	28	20	10
07060-141	-	-	18	M14	17,5	28	20	10
07060-16	-	07060-816	18	M16	17,5	28	20	10
07060-123	-	-	20	M12	19,6	32	24	12
07060-161	-	-	20	M16	19,6	32	24	12
07060-18	-	-	20	M18	19,6	32	24	12
07060-124	07060-216	-	22	M12/M16	21,6	35	28	14
07060-181	-	-	22	M18	21,6	35	28	14
07060-20	-	-	22	M20	21,6	35	28	14
07060-163	-	-	24	M16	23,6	40	32	16
07060-201	-	-	24	M20	23,6	40	32	16
07060-22	-	-	24	M22	23,6	40	32	16
07060-164	-	-	28	M16	27,6	44	36	18
07060-202	-	-	28	M20	27,6	44	36	18
07060-24	-	-	28	M24	27,6	44	36	18
07060-27	-	-	32	M27	31,5	50	40	20
07060-241	-	-	36	M24	35,5	54	44	22
07060-30	-	-	36	M30	35,5	54	44	22
07060-36	-	-	42	M36	41,5	65	52	26

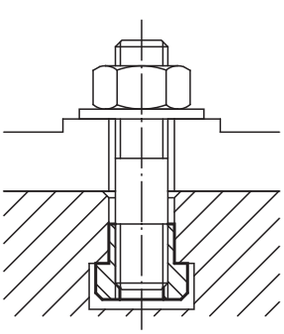

07061

Nuts for T-slots

long

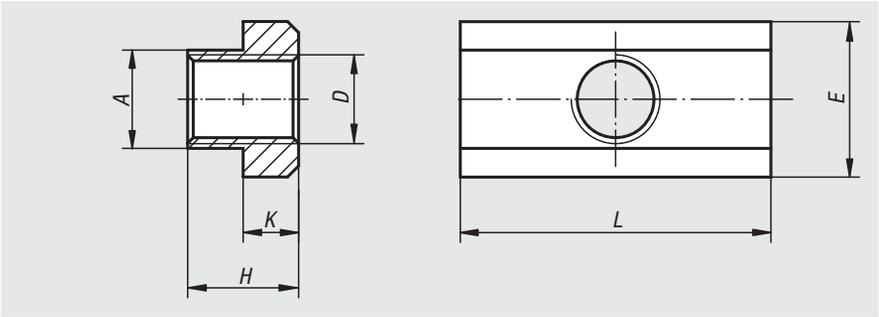

Material:
Carbon steel.

Version:
Tempered to 10.

Sample order:
nlm 07061-12

Order No.	Nominal slot size	D	A	E	L	H	K
07061-08	10	M8	9,7	15	30	12	6
07061-10	12	M10	11,7	18	36	14	7
07061-12	14	M12	13,7	22	44	16	8
07061-14	16	M14	15,7	25	50	18	9
07061-16	18	M16	17,7	28	56	20	10
07061-18	20	M18	19,7	32	64	24	12
07061-20	22	M20	21,7	35	70	28	14
07061-24	28	M24	27,7	44	88	36	18
07061-30	36	M30	35,6	54	108	44	22

07070

Nuts for T-slots

blanks

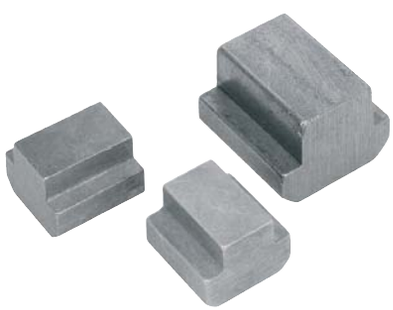

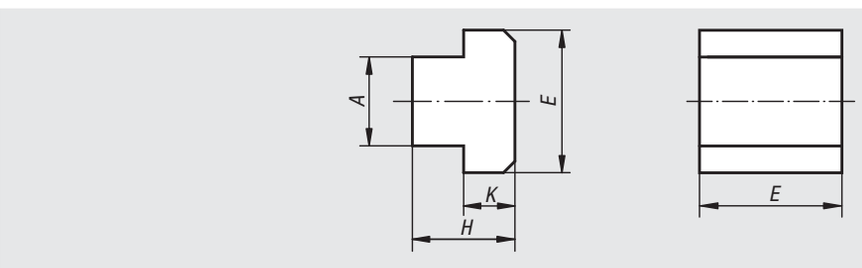

Material:
Carbon steel or stainless steel 1.4305.

Sample order:
nlm 07070-16

Note:
These blank nuts are used to make nuts for T-slots with all sorts of thread sizes cost-effectively.

Order No. high carbon steel	Order No. stainless steel	Nominal slot size	A	E	H	K
07070-06	-	6	5,6	10	8	4
07070-08	**07070-808**	8	7,6	13	10	6
07070-10	**07070-810**	10	9,6	15	12	6
07070-12	**07070-812**	12	11,5	18	14	7
07070-14	**07070-814**	14	13,5	22	16	8
07070-16	-	16	15,6	25	18	9
07070-18	-	18	17,5	28	20	10
07070-20	-	20	19,6	32	24	12
07070-22	-	22	21,6	35	28	14
07070-24	-	24	23,6	40	32	16
07070-28	-	28	27,6	44	36	18
07070-36	-	36	35,5	54	44	22
07070-42	-	42	41,6	65	52	26

Slot nuts

twist-in Type I

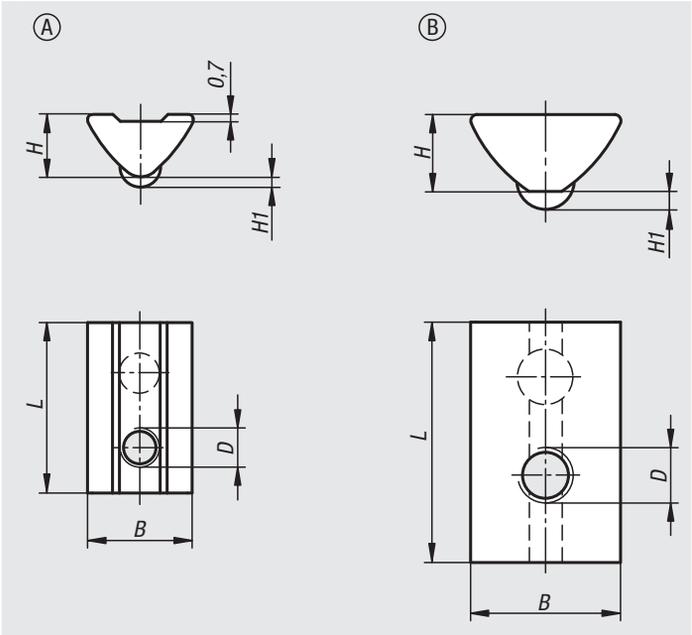

Material:
Steel.

Version:
galvanized.

Sample order:
nlm 07071-0604

Note:
The slot nut is twisted into the profile slot and so can be subsequently inserted into existing systems. The spring-loaded ball allows the nut to be fixated anywhere in the profile slot.

Order No.	Type	Slot width	Form	D	B	H	H1	L
07071-0604	I	6	A	M4	10,5	6,3	1	17
07071-0605	I	6	A	M5	10,5	6,3	1	17
07071-0606	I	6	A	M6	10,5	6,3	1	17
07071-0804	I	8	B	M4	13,7	7	1,7	22
07071-0805	I	8	B	M5	13,7	7	1,7	22
07071-0806	I	8	B	M6	13,7	7	1,7	22
07071-0808	I	8	B	M8	13,7	7	1,7	22

Slot nuts

twist-in, keyed Type I

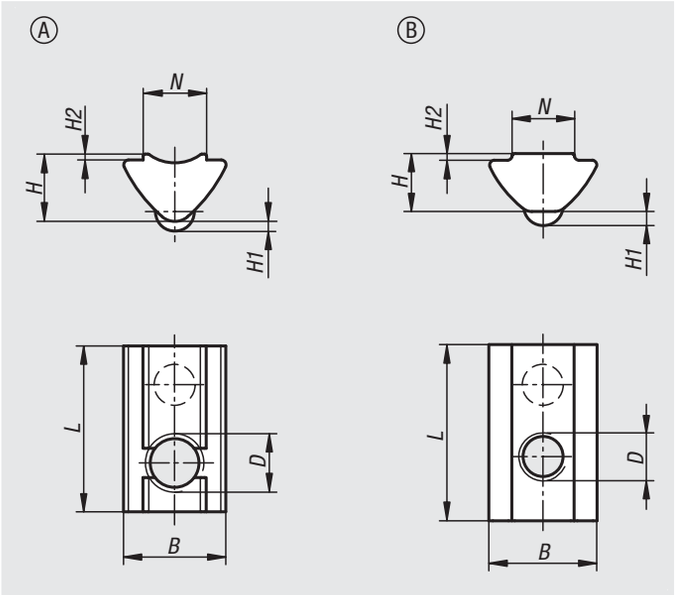

Material:
Steel.

Version:
galvanized.

Sample order:
nlm 07073-0604

Note:
The slot nut is twisted into the profile slot and so can be subsequently inserted into existing systems. The spring-loaded ball allows the nut to be fixated anywhere in the profile slot. The key centres the nut in the profile slot and keeps it neatly seated.

Order No.	Type	Slot width	Form	D	N	B	H	H1	H2	L
07073-0604	I	6	A	M4	6,5	10,5	6,9	1	0,6	17
07073-0605	I	6	A	M5	6,5	10,5	6,9	1	0,6	17
07073-0606	I	6	A	M6	6,5	10,5	6,9	1	0,6	17
07073-0803	I	8	B	M3	7,8	13,5	7,2	1,75	0,8	22
07073-0804	I	8	B	M4	7,8	13,5	7,2	1,75	0,8	22
07073-0805	I	8	B	M5	7,8	13,5	7,2	1,75	0,8	22
07073-0806	I	8	B	M6	7,8	13,5	7,2	1,75	0,8	22
07073-0808	I	8	B	M8	7,8	13,5	7,2	1,75	0,8	22

Slot nuts

strong Type I

Material:
Steel.

Version:
galvanized.

Sample order:
nlm 07075-0804

Note:
Suitable for high load connections. Since the key passes to the slot form of the profile, forces are transferred to the profile. The total height allows more threads to be engaged. The slot key can only be inserted into the profile slot from the end. The spring-loaded ball allows the slot key to be fixated anywhere in the profile slot.

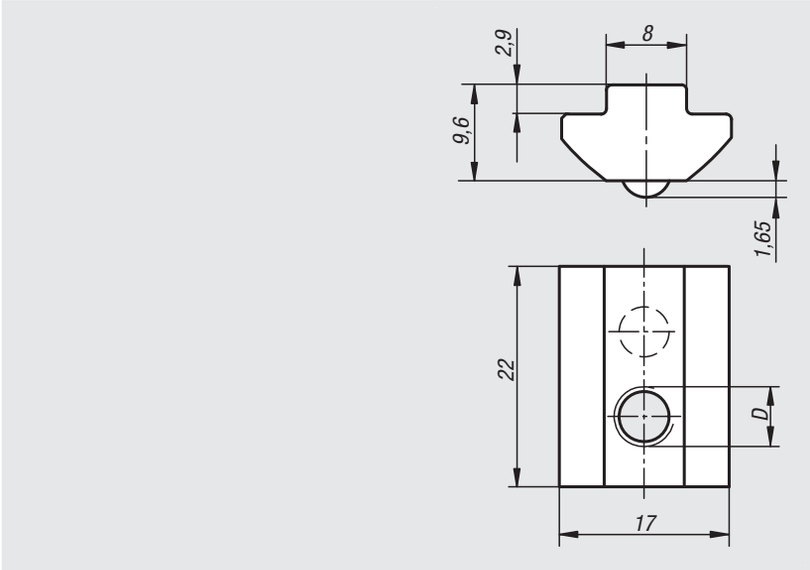

Order No.	Type	Slot width	D
07075-0804	I	8	M4
07075-0805	I	8	M5
07075-0806	I	8	M6
07075-0808	I	8	M8

Slot key profile

type I

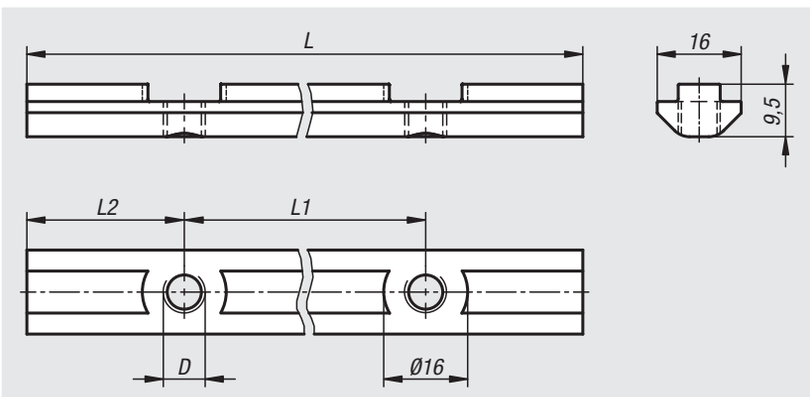

Material:
Steel.

Version:
Coated.

Sample order:
nlm 07076-084008x2000

Note:
The slot profiles has a tapped hole pitch of 40 mm or 60 mm.
The profiles are particularly suitable for maintaining a constant centre distance by the bearing flanges 10400 for transport rollers.

Order No.	Slot width	D	L	L1	L2	No. of holes
07076-084008X2000	8	M8	1000	40	20	25
07076-086008X2000	8	M8	1000	60	30	17

07077

Slot nuts

twist-in Type B

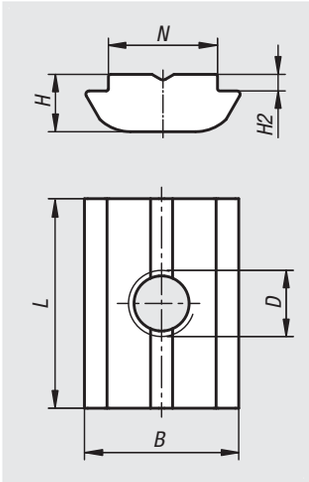

Material:
Steel.

Version:
galvanized.

Sample order:
nlm 07077-1004

Note:
The slot nut is twisted into the profile slot and so can be subsequently inserted into existing systems.

Order No.	Type	Slot width	B	D	H	H2	L	N
07077-0804	B	8	11,6	M4	4,6	1	16	7,9
07077-0805	B	8	11,6	M5	4,6	1	16	7,9
07077-0806	B	8	11,6	M6	4,6	1	16	7,9
07077-0808	B	8	11,6	M8	4,6	1	16	7,9
07077-1004	B	10	14	M4	5,2	1,5	19	9,9
07077-1005	B	10	14	M5	5,2	1,5	19	9,9
07077-1006	B	10	14	M6	5,2	1,5	19	9,9
07077-1008	B	10	14	M8	5,2	1,5	19	9,9

07078

Slot nuts

twist-in with spring Type B

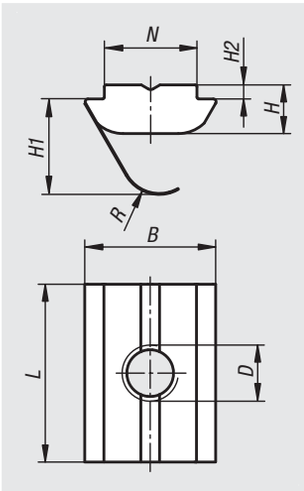

Material:
Steel.

Version:
galvanized.

Sample order:
nlm 07078-1004

Note:
The slot nut is twisted into the profile slot and so can be subsequently inserted into existing systems. The spring allows the nut to be fixated anywhere in the profile slot.

Order No.	Type	Slot width	B	D	H	H1	H2	L	N	R
07078-0804	B	8	11,6	M4	4,6	8,8	1	16	7,9	3
07078-0805	B	8	11,6	M5	4,6	8,8	1	16	7,9	3
07078-0806	B	8	11,6	M6	4,6	8,8	1	16	7,9	3
07078-0808	B	8	11,6	M8	4,6	8,8	1	16	7,9	3
07078-1004	B	10	14	M4	5,2	10,2	1,5	19	9,9	4
07078-1005	B	10	14	M5	5,2	10,2	1,5	19	9,9	4
07078-1006	B	10	14	M6	5,2	10,2	1,5	19	9,9	4
07078-1008	B	10	14	M8	5,2	10,2	1,5	19	9,9	4

Nuts for T-slots

rhombic form

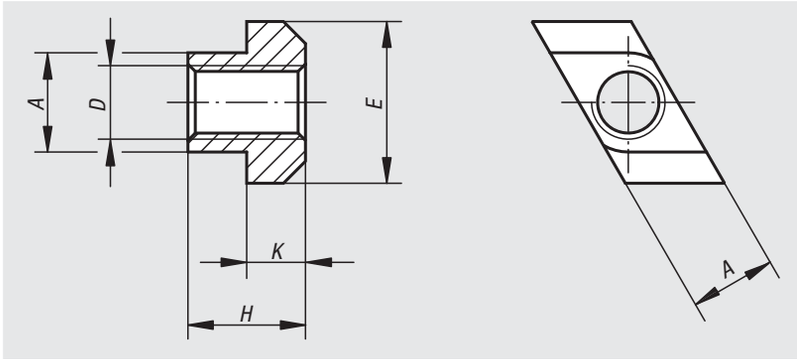

Material:
Carbon steel.

Version:
Tempered to 8 and black oxidised.

Sample order:
nlm 07080-114

Note:
The benefit of rhombic nuts for T-slots is that they can be fitted in the slot from the top. They are particularly useful for long T-slots, or when the configuration on the machine table does not permit clamping screws or nuts for T-slots to be inserted from the side.

Application:
Insert from above then twist in the slot until it stops.

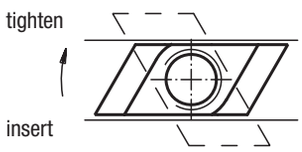

Order No.	Nominal slot size	D	A	E	H	K
07080-105	6	M5	5,6	10	8	4
07080-106	8	M6	7,6	13	10	6
07080-108	10	M8	9,7	15	12	6
07080-110	12	M10	11,7	18	14	7
07080-210	14	M10	13,5	22	16	8
07080-310	18	M10	17,5	28	20	10
07080-112	14	M12	13,7	22	16	8
07080-114	16	M14	15,7	25	18	9
07080-116	18	M16	17,7	28	20	10
07080-216	20	M16	19,7	32	24	12
07080-316	22	M16	21,5	35	28	14
07080-416	28	M16	27,5	44	36	18
07080-118	20	M18	19,7	32	24	12
07080-120	22	M20	21,7	35	28	14
07080-124	28	M24	27,7	44	36	18
07080-130	36	M30	35,6	54	44	22
07080-136	42	M36	41,5	65	52	26

T-nuts

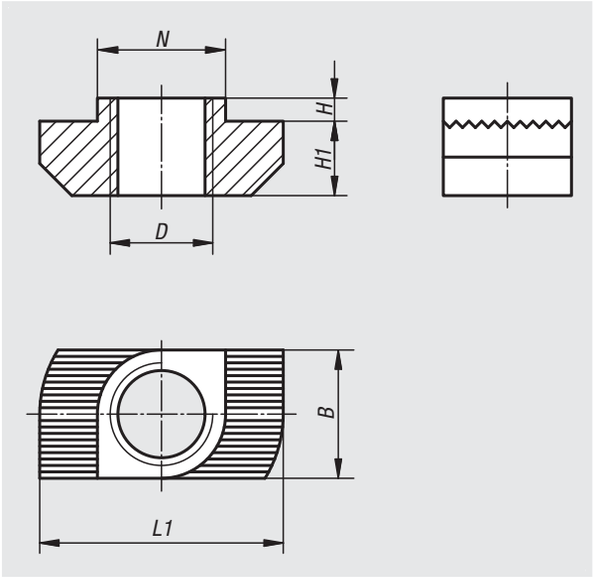

Material:
Steel.

Version:
galvanized.

Sample order:
nlm 07094-0806015X16

Note:
Universal fastening element. The hammer-headed screw is twisted into the profile slot and so can mounted into an existing systems at a later date. The serrations break through the anodized film and creates a secure, electrical conductive connection.

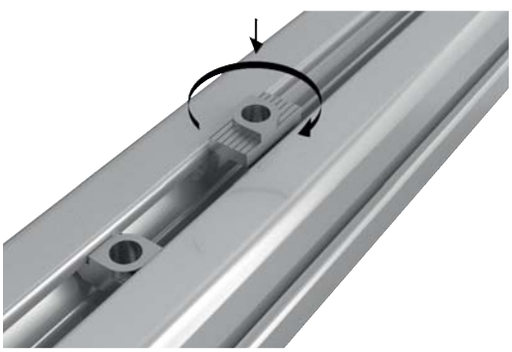

Order No.	Type	Slot width	D	N	B	H	H1	L1
07090-0804015	B	8	M4	7,7	7,7	1,5	4,5	16
07090-0805015	B	8	M5	7,7	7,7	1,5	4,5	16
07090-0806015	B	8	M6	7,7	7,7	1,5	4,5	16
07090-1004030	B	10	M4	9,7	9,7	3	5,8	19
07090-1005017	-	10	M5	9,7	9,7	1,5	5,8	19
07090-1005030	B	10	M5	9,7	9,7	3	5,8	19
07090-1006017	-	10	M6	9,7	9,7	1,5	5,8	19
07090-1006030	B	10	M6	9,7	9,7	3	5,8	19
07090-1008017	-	10	M8	9,7	9,7	1,5	5,8	19
07090-1008030	B	10	M8	9,7	9,7	3	5,8	19

Hammer-head screws

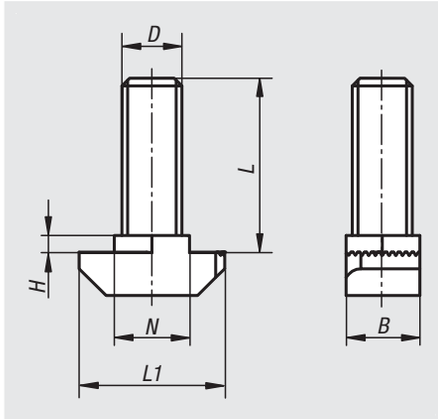

Material:
Steel.

Version:
galvanized.

Sample order:
nlm 07094-0806015X16

Note:
Universal fastening element. The hammer-headed screw is twisted into the profile slot and so can mounted into an existing systems at a later date. The serrations break through the anodized film and creates a secure, electrical conductive connection.

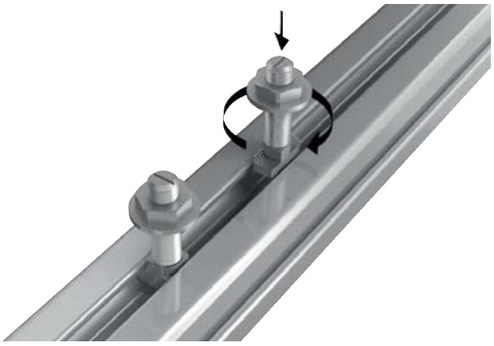

Order No.	Type	Slot width	B	D	H	L	L1	N
07094-0806015X16	B	8	7,7	M6	1,5	16	16	7,7
07094-0806015X20	B	8	7,7	M6	1,5	20	16	7,7
07094-0806015X25	B	8	7,7	M6	1,5	25	16	7,7
07094-1008030X20	B	10	9,7	M8	3	20	19	9,7
07094-1008030X25	B	10	9,7	M8	3	25	19	9,7
07094-1008030X30	B	10	9,7	M8	3	30	19	9,7
07094-1008030X40	B	10	9,7	M8	3	40	19	9,7
07094-1008030X60	B	10	9,7	M8	3	60	19	9,7

Ball-end thrust screws with head

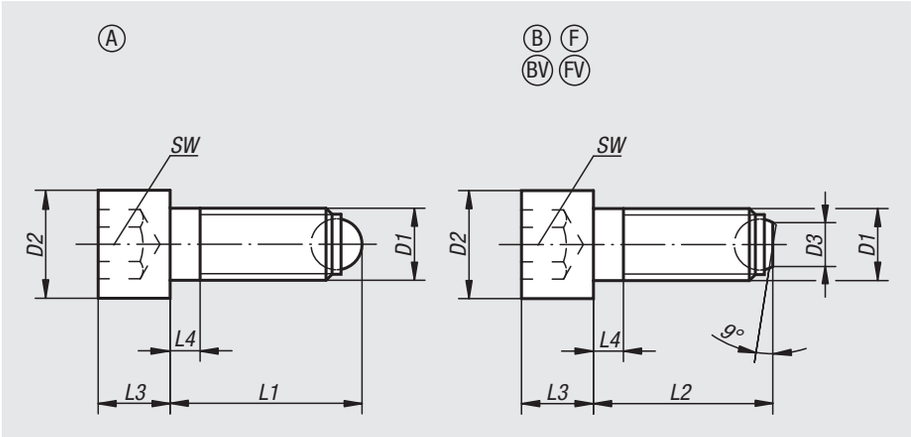

Material:
Screw carbon steel.
Ball ball-bearing steel.

Version:
Screw grade min. 10.9, black.
Ball hardened, bright.

Sample order:
nlm 07100-10820

Note:
Form A with full ball is used when a clean, polished contact surface is required. Surfaces which are not flat and parallel can be firmly clamped or supported with Form B with flattened ball, the movable ball can adapt itself up to 9°.

Drawing reference:
Form A: full ball
Form B: flattened ball
Form BV: flattened ball non-rotating
Form F: flattened ball diamond grip
Form FV: flattened ball diamond grip non-rotating

Order No. Form A	D1	D2	L1	L3	L4	Ball-Ø	SW	Load rating max. kN (static load only)
07100-10410	M4	7	10,2	4	2,1	2,5	3	3,5
07100-10416	M4	7	16,2	4	2,1	2,5	3	3,5
07100-10420	M4	7	20,2	4	2,1	2,5	3	3,5
07100-10512	M5	8,5	12,4	5	2,4	3	4	4,5
07100-10516	M5	8,5	16,4	5	2,4	3	4	4,5
07100-10520	M5	8,5	20,4	5	2,4	3	4	4,5
07100-10620	M6	10	20,8	6	3	4	5	9
07100-10630	M6	10	30,8	6	3	4	5	9
07100-10640	M6	10	40,8	6	16	4	5	9
07100-10820	M8	13	21,2	8	3,5	5,5	6	15
07100-10835	M8	13	36,2	8	3,5	5,5	6	15
07100-10850	M8	13	51,2	8	22	5,5	6	15
07100-11025	M10	16	26,7	10	4,5	7	8	20
07100-11040	M10	16	41,7	10	4,5	7	8	20
07100-11060	M10	16	61,7	10	28	7	8	20
07100-11230	M12	18	32	12	5	8,5	10	30
07100-11250	M12	18	52	12	5	8,5	10	30
07100-11280	M12	18	82	12	44	8,5	10	30
07100-11640	M16	24	43,3	16	6	12	14	60
07100-11660	M16	24	63,3	16	6	12	14	60
07100-11680	M16	24	83,3	16	36	12	14	60
07100-12050	M20	30	54,2	20	7,5	15	17	90
07100-12080	M20	30	84,2	20	28	15	17	90
07100-120100	M20	30	104,2	20	48	15	17	90
07100-12460	M24	36	64,7	24	9	18	19	120
07100-12490	M24	36	94,7	24	30	18	19	120
07100-124120	M24	36	124,7	24	60	18	19	120

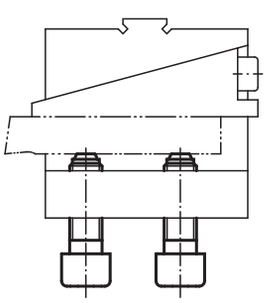

Ball-end thrust screws with head

Order No. Form B	Order No. Form F	D1	D2	D3	L2	L3	L4	Ball-Ø	SW	Load rating max. kN (static load only)
07100-20410	-	M4	7	1,4	10	4	2,1	2,5	3	3,5
07100-20416	-	M4	7	1,4	16	4	2,1	2,5	3	3,5
07100-20420	-	M4	7	1,4	20	4	2,1	2,5	3	3,5
07100-20512	-	M5	8,5	2	12	5	2,4	3	4	4,5
07100-20516	-	M5	8,5	2	16	5	2,4	3	4	4,5
07100-20520	-	M5	8,5	2	20	5	2,4	3	4	4,5
07100-20620	-	M6	10	3,2	20	6	3	4	5	9
07100-20630	-	M6	10	3,2	30	6	3	4	5	9
07100-20640	-	M6	10	3,2	40	6	16	4	5	9
07100-20820	-	M8	13	4,5	20	8	3,5	5,5	6	15
07100-20835	-	M8	13	4,5	35	8	3,5	5,5	6	15
07100-20850	-	M8	13	4,5	50	8	22	5,5	6	15
07100-21025	07100-31025	M10	16	6	25	10	4,5	7	8	20
07100-21040	07100-31040	M10	16	6	40	10	4,5	7	8	20
07100-21060	07100-31060	M10	16	6	60	10	28	7	8	20
07100-21230	07100-31230	M12	18	7,2	30	12	5	8,5	10	30
07100-21250	07100-31250	M12	18	7,2	50	12	5	8,5	10	30
07100-21280	07100-31280	M12	18	7,2	80	12	44	8,5	10	30
07100-21640	07100-31640	M16	24	10,7	40	16	6	12	14	60
07100-21660	07100-31660	M16	24	10,7	60	16	6	12	14	60
07100-21680	07100-31680	M16	24	10,7	80	16	36	12	14	60
07100-22050	-	M20	30	13,5	50	20	7,5	15	17	90
07100-22080	-	M20	30	13,5	80	20	28	15	17	90
07100-220100	-	M20	30	13,5	100	20	48	15	17	90
07100-22460	-	M24	36	15,8	60	24	9	18	19	120
07100-22490	-	M24	36	15,8	90	24	30	18	19	120
07100-224120	-	M24	36	15,8	120	24	60	18	19	120

Order No. Form BV	Order No. Form FV	D1	D2	D3	L2	L3	L4	Ball-Ø	SW	Load rating max. kN (static load only)
07100-40820	-	M8	13	4,5	20	8	3,5	5,5	6	9
07100-40835	-	M8	13	4,5	35	8	3,5	5,5	6	9
07100-40850	-	M8	13	4,5	50	8	22	5,5	6	9
07100-41025	07100-51025	M10	16	6	25	10	4,5	7	8	12
07100-41040	07100-51040	M10	16	6	40	10	4,5	7	8	12
07100-41060	07100-51060	M10	16	6	60	10	28	7	8	12
07100-41230	07100-51230	M12	18	7,2	30	12	5	8,5	10	18
07100-41250	07100-51250	M12	18	7,2	50	12	5	8,5	10	18
07100-41280	07100-51280	M12	18	7,2	80	12	44	8,5	10	18
07100-41640	07100-51640	M16	24	10,7	40	16	6	12	14	36
07100-41660	07100-51660	M16	24	10,7	60	16	6	12	14	36
07100-41680	07100-51680	M16	24	10,7	80	16	36	12	14	36

Ball-end thrust screws with head

stainless steel

Material:
Stainless steel

Version:
Bright.

Sample order:
nlm 07101-11230

Note:
Form A with full ball is used when a clean, polished contact surface is required. Surfaces which are not flat and parallel can be firmly clamped or supported with Form B with flattened ball, the movable ball can adapt itself up to 9°.

Drawing reference:
Form A: with full ball
Form B: with flattened ball

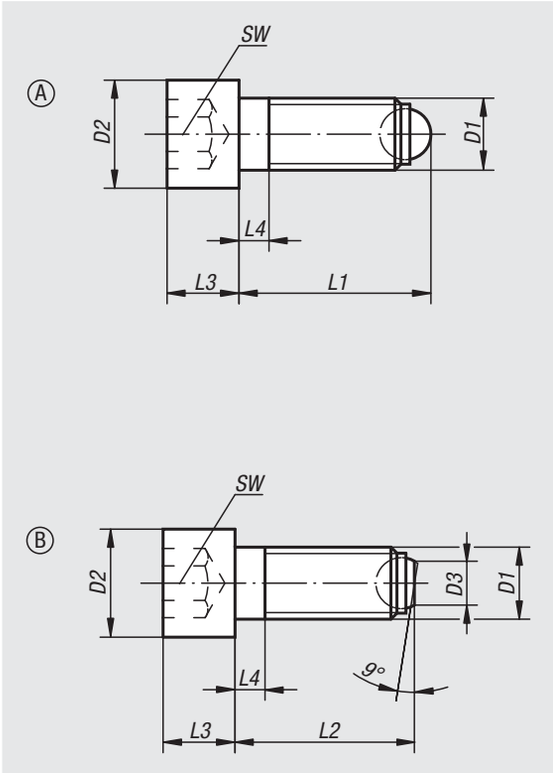

Order No. Form A	D1	D2	L1	L3	L4	Ball-Ø	SW
07101-10410	M4	7	10,2	4	2,1	2,5	3
07101-10416	M4	7	16,2	4	2,1	2,5	3
07101-10420	M4	7	20,2	4	2,1	2,5	3
07101-10512	M5	8,5	12,4	5	2,4	3	4
07101-10516	M5	8,5	16,4	5	2,4	3	4
07101-10520	M5	8,5	20,4	5	2,4	3	4
07101-10620	M6	10	20,8	6	3	4	5
07101-10630	M6	10	30,8	6	3	4	5
07101-10640	M6	10	40,8	6	16	4	5
07101-10820	M8	13	21,2	8	3,5	5,5	6
07101-10835	M8	13	36,2	8	3,5	5,5	6
07101-10850	M8	13	51,2	8	22	5,5	6
07101-11025	M10	16	26,7	10	4,5	7	8
07101-11040	M10	16	41,7	10	4,5	7	8
07101-11060	M10	16	61,7	10	28	7	8
07101-11230	M12	18	32	12	5	8,5	10
07101-11250	M12	18	52	12	5	8,5	10
07101-11280	M12	18	82	12	44	8,5	10
07101-11640	M16	24	43,3	16	6	12	14
07101-11660	M16	24	63,3	16	6	12	14
07101-11680	M16	24	83,3	16	36	12	14

Order No. Form B	D1	D2	D3	L2	L3	L4	Ball-Ø	SW
07101-20410	M4	7	1,4	10	4	2,1	2,5	3
07101-20416	M4	7	1,4	16	4	2,1	2,5	3
07101-20420	M4	7	1,4	20	4	2,1	2,5	3
07101-20512	M5	8,5	2	12	5	2,4	3	4
07101-20516	M5	8,5	2	16	5	2,4	3	4
07101-20520	M5	8,5	2	20	5	2,4	3	4
07101-20620	M6	10	3,2	20	6	3	4	5
07101-20630	M6	10	3,2	30	6	3	4	5
07101-20640	M6	10	3,2	40	6	16	4	5
07101-20820	M8	13	4,5	20	8	3,5	5,5	6
07101-20835	M8	13	4,5	35	8	3,5	5,5	6
07101-20850	M8	13	4,5	50	8	22	5,5	6
07101-21025	M10	16	6	25	10	4,5	7	8
07101-21040	M10	16	6	40	10	4,5	7	8
07101-21060	M10	16	6	60	10	28	7	8
07101-21230	M12	18	7,2	30	12	5	8,5	10
07101-21250	M12	18	7,2	50	12	5	8,5	10
07101-21280	M12	18	7,2	80	12	44	8,5	10
07101-21640	M16	24	10,7	40	16	6	12	14
07101-21660	M16	24	10,7	60	16	6	12	14
07101-21680	M16	24	10,7	80	16	36	12	14

Ball-end thrust screws without head

with full ball, LONG-LOK secured

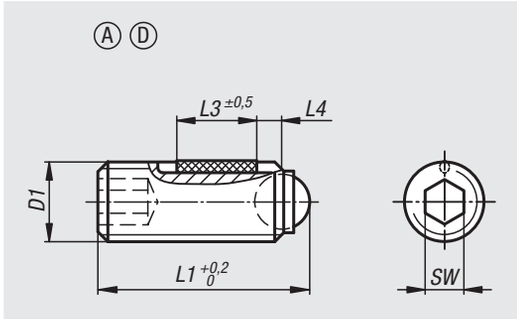

Material:
Screw carbon steel, grade 10.9
Ball, ball-bearing steel or POM.
LONG-LOK thread lock nylon.

Version:
Screw black.
Ball hardened, bright.

Sample order:
nlm 07105-1046

Note:
Ball-end thrust screws with full ball are used when a clean, polished contact surface is required.

Drawing reference:
Form A: steel ball
Form D: POM ball

L4 = approx. 2x pitch

Order No. Form A	Order No. Form D	D1	L1	L3	Ball-Ø	SW	Load rating max. kN (static load only)
07105-1046	07105-3046	M4	6	2,5	2,5	2	3,5/0,3
07105-10410	07105-30410	M4	10	3,5	2,5	2	3,5/0,3
07105-10416	07105-30416	M4	16	5	2,5	2	3,5/0,3
07105-1058	07105-3058	M5	8	3,5	3	2,5	4,5/0,5
07105-10512	07105-30512	M5	12	5	3	2,5	4,5/0,5
07105-10520	07105-30520	M5	20	6	3	2,5	4,5/0,5
07105-10610	07105-30610	M6	10,8	3,5	4	3	9/0,9
07105-10616	07105-30616	M6	16,8	7	4	3	9/0,9
07105-10620	07105-30620	M6	20,8	7	4	3	9/0,9
07105-10625	07105-30625	M6	25,8	7	4	3	9/0,9
07105-10650	-	M6	50,8	7	4	3	9
07105-10660	-	M6	60,8	7	4	3	9
07105-10810	07105-30810	M8	11,2	3,5	5,5	4	10/1,5
07105-10812	07105-30812	M8	13,2	5	5,5	4	10/1,5
07105-10820	07105-30820	M8	21,2	8	5,5	4	15/1,5
07105-10825	07105-30825	M8	26,2	8	5,5	4	15/1,5
07105-10830	07105-30830	M8	31,2	8	5,5	4	15/1,5
07105-10850	-	M8	51,2	8	5,5	4	15
07105-10860	-	M8	61,2	8	5,5	4	15
07105-10880	-	M8	81,2	8	5,5	4	15
07105-11012	07105-31012	M10	13,7	5	7	5	20/2
07105-11016	07105-31016	M10	17,7	9	7	5	20/2
07105-11020	07105-31020	M10	21,7	9	7	5	20/2
07105-11025	07105-31025	M10	26,7	9	7	5	20/2
07105-11035	07105-31035	M10	36,7	9	7	5	20/2
07105-11216	07105-31216	M12	18	8	8,5	6	30/3
07105-11220	07105-31220	M12	22	10	8,5	6	30/3
07105-11230	07105-31230	M12	32	10	8,5	6	30/3
07105-11240	07105-31240	M12	42	10	8,5	6	30/3
07105-11620	-	M16	23,3	10	12	8	60
07105-11625	-	M16	28,3	14	12	8	60
07105-11635	-	M16	38,3	14	12	8	60
07105-11650	-	M16	53,3	14	12	8	60

Ball-end thrust screws without head

with flattened ball LONG-LOK secured

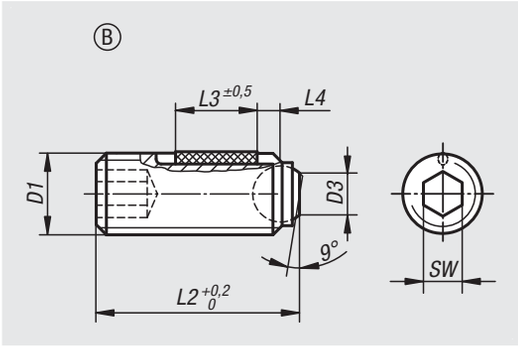

Material:
Screw carbon steel, grade 10.9
Ball, ball-bearing steel.
LONG-LOK thread lock nylon.

Version:
Screw black. Ball hardened, bright.

Sample order:
nlm 07105-20610

Note:
Surfaces which are not flat and parallel can be firmly clamped or supported with a flattened ball, the movable ball can adapt itself up to 9°.

Drawing reference:
Form B: with flattened ball

L4 = approx. 2x pitch

Order No. Form B	D1	D3	L2	L3	Ball-Ø	SW	Load rating max. kN (static load only)
07105-20610	M6	3	10,1	3,5	4	3	9
07105-20616	M6	3	16,1	7	4	3	9
07105-20620	M6	3	20,1	7	4	3	9
07105-20625	M6	3	25,1	7	4	3	9
07105-20650	M6	3	50,1	7	4	3	9
07105-20660	M6	3	60,1	7	4	3	9
07105-20810	M8	4,1	10,3	3,5	5,5	4	10
07105-20812	M8	4,1	12,3	5	5,5	4	10
07105-20820	M8	4,1	20,3	8	5,5	4	15
07105-20825	M8	4,1	25,3	8	5,5	4	15
07105-20830	M8	4,1	30,3	8	5,5	4	15
07105-20850	M8	4,1	50,3	8	5,5	4	15
07105-20860	M8	4,1	60,3	8	5,5	4	15
07105-20880	M8	4,1	80,3	8	5,5	4	15
07105-21012	M10	5,6	12,3	5	7	5	20
07105-21016	M10	5,6	16,3	9	7	5	20
07105-21020	M10	5,6	20,3	9	7	5	20
07105-21025	M10	5,6	25,3	9	7	5	20
07105-21035	M10	5,6	35,3	9	7	5	20
07105-21216	M12	7	16,2	8	8,5	6	30
07105-21220	M12	7	20,2	10	8,5	6	30
07105-21230	M12	7	30,2	10	8,5	6	30
07105-21240	M12	7	40,2	10	8,5	6	30
07105-21620	M16	10,7	20	10	12	8	60
07105-21625	M16	10,7	25	14	12	8	60
07105-21635	M16	10,7	35	14	12	8	60
07105-21650	M16	10,7	50	14	12	8	60

Ball-end thrust screws without head

short version

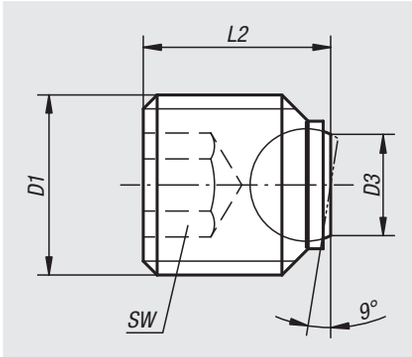

Material:
Screw carbon steel, ball ball-bearing steel.

Version:
Screw grade 12.9, black oxidised.
Ball hardened, bright.

Sample order:
nlm 07109-1416

Note:
Short ball-end thrust screws are particularly suited to DIN 1835 E straight milling cutter shanks together with e.g. Whistle Notch or Weldon tool holders.

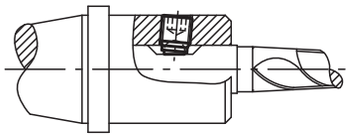

Order No.	D1	L2	D3	Ball-Ø	SW	Load rating max. kN (static load only)
07109-1416	M14	16	7,2	8,5	6	30
07109-1616	M16	16	7,2	8,5	8	30
07109-1820	M18x2	20	10,7	12	10	60
07109-2020	M20x2	20	10,7	12	10	60
07109-2025	M20x2	25	10,7	12	10	60
07109-2425	M24x2	25	13,5	15	12	90

Ball-end thrust screws without head

with full ball

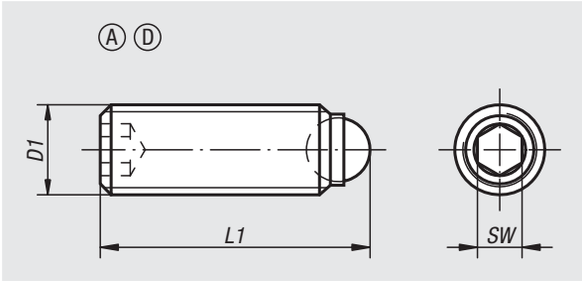

Material:
Screw, high-carbon steel, grade 10.9
Ball, ball-bearing steel or POM.

Version:
Screw black.
Ball hardened, bright.

Sample order:
nlm 07110-10810

Note:
Ball-end thrust screws with full ball are used when a clean, polished contact surface is required.
Longer versions have been specially designed to be glued in, allowing mechanical connecting elements with external thread to be made cost-effectively for small and medium-sized series.

Drawing reference:
Form A: steel ball
Form D: POM ball

Order No. Form A	Order No. Form D	D1	L1	Ball-Ø	SW	Load rating max. kN (static load only)
07110-1046	**07110-3046**	M4	6	2,5	2	3,5/0,3
07110-1048	**07110-3048**	M4	8	2,5	2	0,3/3,5
07110-10410	**07110-30410**	M4	10	2,5	2	3,5/0,3
07110-10412	**07110-30412**	M4	12	2,5	2	0,3/3,5
07110-10416	**07110-30416**	M4	16	2,5	2	3,5/0,3
07110-1058	**07110-3058**	M5	8	3	2,5	4,5/0,5
07110-10510	**07110-30510**	M5	10	3	2,5	4,5/0,5
07110-10512	**07110-30512**	M5	12	3	2,5	4,5/0,5
07110-10516	**07110-30516**	M5	16	3	2,5	4,5/0,5
07110-10520	**07110-30520**	M5	20	3	2,5	4,5/0,5
07110-10525	**07110-30525**	M5	25	3	2,5	4,5/0,5
07110-10610	**07110-30610**	M6	10,8	4	3	9/0,9
07110-10612	**07110-30612**	M6	12,8	4	3	9/0,9
07110-10616	**07110-30616**	M6	16,8	4	3	9/0,9
07110-10620	**07110-30620**	M6	20,8	4	3	9/0,9
07110-10625	**07110-30625**	M6	25,8	4	3	9/0,9
07110-10650	**-**	M6	50,8	4	3	9
07110-10660	**-**	M6	60,8	4	3	9
07110-10680	**-**	M6	80,8	4	3	9
07110-10810	**07110-30810**	M8	11,2	5,5	4	10/1,5
07110-10812	**07110-30812**	M8	13,2	5,5	4	10/1,5
07110-10816	**07110-30816**	M8	17,2	5,5	4	15/1,5
07110-10820	**07110-30820**	M8	21,2	5,5	4	15/1,5
07110-10825	**07110-30825**	M8	26,2	5,5	4	15/1,5
07110-10830	**07110-30830**	M8	31,2	5,5	4	15/1,5
07110-10850	**-**	M8	51,2	5,5	4	15
07110-10860	**-**	M8	61,2	5,5	4	15
07110-10880	**-**	M8	81,2	5,5	4	15

Ball-end thrust screws without head

with full ball

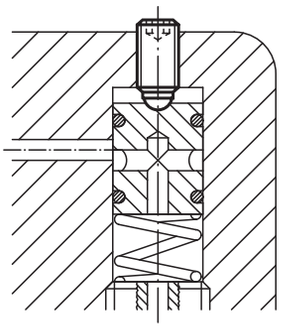

Order No. Form A	Order No. Form D	D1	L1	Ball-Ø	SW	Load rating max. kN (static load only)
07110-11012	**07110-31012**	M10	13,7	7	5	20/2
07110-11016	**07110-31016**	M10	17,7	7	5	20/2
07110-11020	**07110-31020**	M10	21,7	7	5	20/2
07110-11025	**07110-31025**	M10	26,7	7	5	20/2
07110-11035	**07110-31035**	M10	36,7	7	5	20/2
07110-11216	**07110-31216**	M12	18	8,5	6	30/3
07110-11220	**07110-31220**	M12	22	8,5	6	30/3
07110-11225	-	M12	27	8,5	6	30
07110-11230	**07110-31230**	M12	32	8,5	6	30/3
07110-11232	-	M12	34	8,5	6	30
07110-11240	**07110-31240**	M12	42	8,5	6	30/3
07110-11620	-	M16	23,3	12	8	60
07110-11625	-	M16	28,3	12	8	60
07110-11635	-	M16	38,3	12	8	60
07110-11650	-	M16	53,3	12	8	60
07110-12030	-	M20	34,2	15	10	90
07110-12040	-	M20	44,2	15	10	90
07110-12060	-	M20	64,2	15	10	90
07110-12435	-	M24	39,7	18	12	120
07110-12450	-	M24	54,7	18	12	120
07110-12480	-	M24	84,7	18	12	120

Ball-end thrust screws without head

with flattened ball

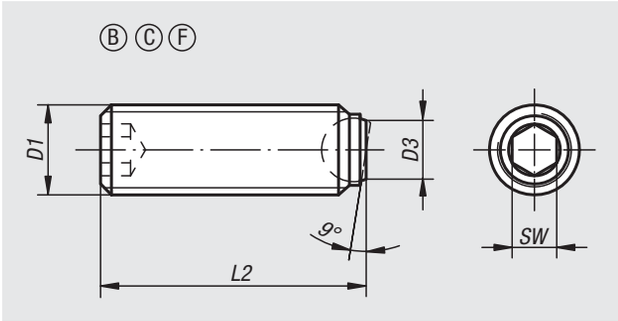

Material:
Screw carbon steel, grade 10.9
Ball, ball-bearing steel or POM.

Version:
Screw black.
Ball hardened, bright.

Sample order:
nlm 07110-41012

Note:
Surfaces which are not flat and parallel can be firmly clamped or supported with Form B, C or F with flattened ball, the movable ball can adapt itself up to 9°.
Longer versions have been specially designed to glue in, allowing mechanical connecting elements with external thread to be made cost-effectively for small and medium-sized series.

Drawing reference:
Form B: steel ball
Form C: POM ball
Form F: steel ball diamond grip

Order No.	Form	D1	D3	L2	Ball-Ø	SW	Load rating max. kN (static load only)
07110-41012	F	M10	6	12	7	5	20
07110-41016	F	M10	6	16	7	5	20
07110-41025	F	M10	6	25	7	5	20
07110-41035	F	M10	6	35	7	5	20
07110-41216	F	M12	7,2	16	8,5	6	30
07110-41220	F	M12	7,2	20	8,5	6	30
07110-41230	F	M12	7,2	30	8,5	6	30
07110-41240	F	M12	7,2	40	8,5	6	30
07110-41620	F	M16	10,7	20	12	8	60
07110-41625	F	M16	10,7	25	12	8	60
07110-41635	F	M16	10,7	35	12	8	60
07110-41650	F	M16	10,7	50	12	8	60

Order No.	Form	D1	D3	L2	Ball-Ø	SW	Load rating max. kN (static load only)
07110-7046	C	M4	1,8	5,9	2,5	2	0,3
07110-7048	C	M4	1,8	7,9	2,5	2	0,3
07110-70410	C	M4	1,8	9,9	2,5	2	0,3
07110-70412	C	M4	1,8	11,9	2,5	2	0,3
07110-70416	C	M4	1,8	15,9	2,5	2	0,3
07110-7058	C	M5	2,1	7,8	3	2,5	0,5
07110-70510	C	M5	2,1	9,8	3	2,5	0,5
07110-70512	C	M5	2,1	11,8	3	2,5	0,5
07110-70516	C	M5	2,1	15,8	3	2,5	0,5
07110-70520	C	M5	2,1	19,8	3	2,5	0,5
07110-70525	C	M5	2,1	24,8	3	2,5	0,5
07110-70610	C	M6	3	10,3	4	3	0,9
07110-70612	C	M6	3	12,3	4	3	0,9
07110-70616	C	M6	3	16,3	4	3	0,9
07110-70620	C	M6	3	20,3	4	3	0,9
07110-70625	C	M6	3	25,3	4	3	0,9
07110-70810	C	M8	4,2	10,4	5,5	4	1,5
07110-70812	C	M8	4,2	12,4	5,5	4	1,5
07110-70816	C	M8	4,2	16,4	5,5	4	1,5
07110-70820	C	M8	4,2	20,4	5,5	4	1,5
07110-70825	C	M8	4,2	25,4	5,5	4	1,5
07110-70830	C	M8	4,2	30,4	5,5	4	1,5

Ball-end thrust screws without head

with flattened ball

Order No.	Form	D1	D3	L2	Ball-Ø	SW	Load rating max. kN (static load only)
07110-2046	B	M4	1,4	5,8	2,5	2	3,5
07110-2048	B	M4	1,4	7,8	2,5	2	3,5
07110-20410	B	M4	1,4	9,8	2,5	2	3,5
07110-20412	B	M4	1,4	11,8	2,5	2	3,5
07110-20416	B	M4	1,4	15,8	2,5	2	3,5
07110-2058	B	M5	2	7,6	3	2,5	4,5
07110-20510	B	M5	2	9,6	3	2,5	4,5
07110-20512	B	M5	2	11,6	3	2,5	4,5
07110-20516	B	M5	2	15,6	3	2,5	4,5
07110-20520	B	M5	2	19,6	3	2,5	4,5
07110-20525	B	M5	2	24,6	3	2,5	4,5
07110-20610	B	M6	3	10,1	4	3	9
07110-20612	B	M6	3	12,1	4	3	9
07110-20616	B	M6	3	16,1	4	3	9
07110-20620	B	M6	3	20,1	4	3	9
07110-20625	B	M6	3	25,1	4	3	9
07110-20650	B	M6	3	50,1	4	3	9
07110-20660	B	M6	3	60,1	4	3	9
07110-20680	B	M6	3	80,1	4	3	9
07110-20810	B	M8	4,1	10,3	5,5	4	10
07110-20812	B	M8	4,1	12,3	5,5	4	10
07110-20816	B	M8	4,1	16,3	5,5	4	15
07110-20820	B	M8	4,1	20,3	5,5	4	15
07110-20825	B	M8	4,1	25,3	5,5	4	15
07110-20830	B	M8	4,1	30,3	5,5	4	15
07110-20850	B	M8	4,1	50,3	5,5	4	15
07110-20860	B	M8	4,1	60,3	5,5	4	15
07110-20880	B	M8	4,1	80,3	5,5	4	15
07110-21012	B	M10	5,6	12,3	7	5	20
07110-21016	B	M10	5,6	16,3	7	5	20
07110-21020	B	M10	5,6	20,3	7	5	20
07110-21025	B	M10	5,6	25,3	7	5	20
07110-21035	B	M10	5,6	35,3	7	5	20
07110-21216	B	M12	7	16,2	8,5	6	30
07110-21220	B	M12	7	20,2	8,5	6	30
07110-21230	B	M12	7	30,2	8,5	6	30
07110-21240	B	M12	7	40,2	8,5	6	30
07110-21620	B	M16	10,7	20	12	8	60
07110-21625	B	M16	10,7	25	12	8	60
07110-21635	B	M16	10,7	35	12	8	60
07110-21650	B	M16	10,7	50	12	8	60
07110-22030	B	M20	13,5	30	15	10	90
07110-22040	B	M20	13,5	40	15	10	90
07110-22060	B	M20	13,5	60	15	10	90
07110-22435	B	M24	15,8	35	18	12	120
07110-22450	B	M24	15,8	50	18	12	120
07110-22480	B	M24	15,8	80	18	12	120

Ball-end thrust screws without head

with flattened ball and rotation lock

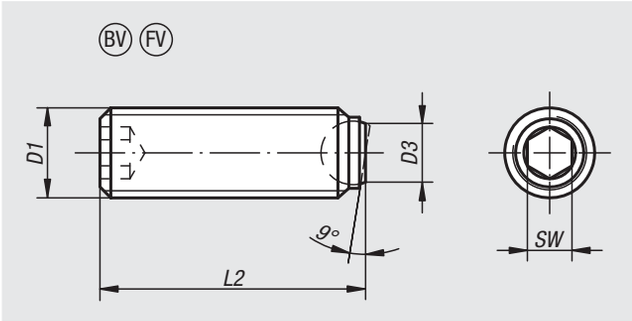

Material:
Screw, high-carbon steel, grade 10.9
Ball, ball-bearing steel.

Version:
Screw black. Ball hardened, bright.

Sample order:
nlm 07110-50820

Note:
Surfaces which are not flat and parallel can be firmly clamped or supported with with a flattened ball, the movable ball can adapt itself up to 9°.
Longer versions have been designed especially to be glued in. This allows mechanical connecting elements with external thread to be made cost-effectively for small and medium-sized series.
The ball has a rotation lock.

Drawing reference:
Form BV: flattened ball non-rotating
Form FV: flattened ball diamond grip non-rotating

Order No. Form BV	Order No. Form FV	D1	D3	L2	Ball-Ø	SW	Load rating max. kN (static load only)
07110-50612	-	M6	3	12,1	4	3	6
07110-50616	-	M6	3	16,1	4	3	6
07110-50620	-	M6	3	20,1	4	3	6
07110-50625	-	M6	3	25,1	4	3	6
07110-50816	**07110-60816**	M8	4,1	16,3	5,5	4	9
07110-50820	**07110-60820**	M8	4,1	20,3	5,5	4	9
07110-50825	**07110-60825**	M8	4,1	25,3	5,5	4	9
07110-50830	**07110-60830**	M8	4,1	30,3	5,5	4	9
07110-51020	**07110-61020**	M10	5,6	20,3	7	5	12
07110-51025	**07110-61025**	M10	5,6	25,3	7	5	12
07110-51035	**07110-61035**	M10	5,6	35,3	7	5	12
07110-51040	**07110-61040**	M10	5,6	40,2	7	5	12
07110-51220	**07110-61220**	M12	7	20,2	8,5	6	18
07110-51230	**07110-61230**	M12	7	30,2	8,5	6	18
07110-51240	**07110-61240**	M12	7	40,2	8,5	6	18
07110-51250	**07110-61250**	M12	7	50	8,5	6	18
07110-51635	**07110-61635**	M16	10,7	35	12	8	36
07110-51650	**07110-61650**	M16	10,7	50	12	8	36
07110-52030	**07110-62030**	M20	13,5	30	15	10	60
07110-52040	**07110-62040**	M20	13,5	40	15	10	60
07110-52050	**07110-62050**	M20	13,5	50	15	10	60
07110-52060	**07110-62060**	M20	13,5	60	15	10	60
07110-52435	**07110-62435**	M24	15,8	35	18	12	80
07110-52450	**07110-62450**	M24	15,8	50	18	12	80
07110-52480	**07110-62480**	M24	15,8	80	18	12	80

Ball-end thrust screws without head

stainless steel with full ball

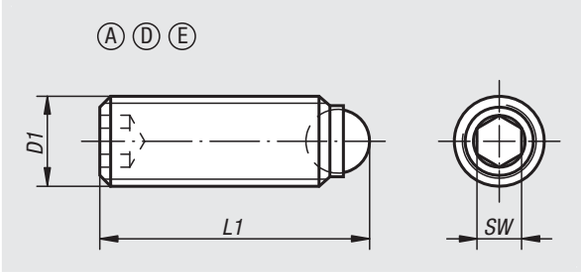

Material:
Screw stainless steel.
Ball stainless steel, POM or ceramic Si_3N_4.

Version:
Stainless steel bright.

Sample order:
nlm 07111-1046

Note:
Ball-end thrust screws with full ball are used when a clean, polished contact surface is required. Longer versions have been designed especially to be glued in, allowing mechanical connecting elements with external threads to be made cost-effectively for small and medium-sized runs. Silicon nitride (Si_3N_4) is characterised by a combination of excellent properties, these include high resilience and strength, excellent wear resistance and good chemical resistance.

Drawing reference:
Form A: stainless steel ball
Form D: POM ball
Form E: ceramic ball

Order No. Form A	Order No. Form D	Order No. Form E	D1	L1	Ball-Ø	SW	Load rating max. kN (static load only)
07111-1046	07111-3046	-	M4	6	2,5	2	-/0,3
07111-1048	07111-3048	-	M4	8	2,5	2	-/0,3
07111-10410	07111-30410	-	M4	10	2,5	2	-/0,3
07111-10412	07111-30412	-	M4	12	2,5	2	-/0,3
07111-10416	07111-30416	-	M4	16	2,5	2	-/0,3
07111-1058	07111-3058	07111-8058	M5	8	3	2,5	-/0,5/4,5
07111-10510	07111-30510	-	M5	10	3	2,5	-/0,5
07111-10512	07111-30512	07111-80512	M5	12	3	2,5	-/0,5/4,5
07111-10516	07111-30516	-	M5	16	3	2,5	-/0,5
07111-10520	07111-30520	07111-80520	M5	20	3	2,5	-/0,5/4,5
07111-10525	07111-30525	-	M5	25	3	2,5	-/0,5
07111-10610	07111-30610	07111-80610	M6	10,8	4	3	-/0,9/9
07111-10612	07111-30612	-	M6	12,8	4	3	-/0,9
07111-10616	07111-30616	07111-80616	M6	16,8	4	3	-/0,9/9
07111-10620	07111-30620	07111-80620	M6	20,8	4	3	-/0,9/9
07111-10625	07111-30625	07111-80625	M6	25,8	4	3	-/0,9/9
07111-10650	-	-	M6	50,8	4	3	-
07111-10660	-	-	M6	60,8	4	3	-
07111-10680	-	-	M6	80,8	4	3	-
07111-10810	07111-30810	07111-80810	M8	11,2	5,5	4	-/1,5/10
07111-10812	07111-30812	07111-80812	M8	13,2	5,5	4	-/1,5/10
07111-10816	07111-30816	-	M8	17,2	5,5	4	-/1,5
07111-10820	07111-30820	07111-80820	M8	21,2	5,5	4	-/1,5/15
07111-10825	07111-30825	07111-80825	M8	26,2	5,5	4	-/1,5/15
07111-10830	07111-30830	07111-80830	M8	31,2	5,5	4	-/1,5/15
07111-10850	-	-	M8	51,2	5,5	4	-
07111-10860	-	-	M8	61,2	5,5	4	-
07111-10880	-	-	M8	81,2	5,5	4	-
07111-11012	-	07111-81012	M10	13,7	7	5	-/20
07111-11016	-	07111-81016	M10	17,7	7	5	-/20
07111-11020	-	07111-81020	M10	21,7	7	5	-/20
07111-11025	-	07111-81025	M10	26,7	7	5	-/20
07111-11035	-	07111-81035	M10	36,7	7	5	-/20
07111-11216	-	07111-81216	M12	18	8,5	6	-/30
07111-11220	-	07111-81220	M12	22	8,5	6	-/30
07111-11225	-	-	M12	27	8,5	6	-
07111-11230	-	07111-81230	M12	32	8,5	6	-/30
07111-11232	-	-	M12	34	8,5	6	-
07111-11240	-	07111-81240	M12	42	8,5	6	-/30
07111-11620	-	-	M16	23,3	12	8	-
07111-11625	-	-	M16	28,3	12	8	-
07111-11635	-	-	M16	38,3	12	8	-
07111-11650	-	-	M16	53,3	12	8	-

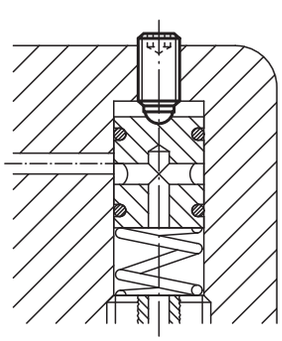

Ball-end thrust screws without head

stainless steel with flattened ball

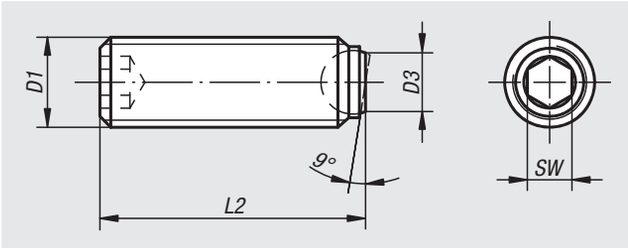

Material:
Screw and ball stainless steel.

Version:
Stainless steel bright.

Sample order:
nlm 07111-2046

Note:
Surfaces which are not flat and parallel can be firmly clamped or supported with with a flattened ball, the movable ball can adapt itself up to 9°.
Longer versions have been designed especially to be glued in. This allows mechanical connecting elements with external thread to be made cost-effectively for small and medium-sized series.

Order No.	D1	D3	L2	Ball-Ø	SW
07111-2046	M4	1,4	5,8	2,5	2
07111-2048	M4	1,4	7,8	2,5	2
07111-20410	M4	1,4	9,8	2,5	2
07111-20412	M4	1,4	11,8	2,5	2
07111-20416	M4	1,4	15,8	2,5	2
07111-2058	M5	2	7,6	3	2,5
07111-20510	M5	2	9,6	3	2,5
07111-20512	M5	2	11,6	3	2,5
07111-20516	M5	2	15,6	3	2,5
07111-20520	M5	2	19,6	3	2,5
07111-20525	M5	2	24,6	3	2,5
07111-20610	M6	3	10,1	4	3
07111-20612	M6	3	12,1	4	3
07111-20616	M6	3	16,1	4	3
07111-20620	M6	3	20,1	4	3
07111-20625	M6	3	25,1	4	3
07111-20650	M6	3	50,1	4	3
07111-20660	M6	3	60,1	4	3
07111-20680	M6	3	80,1	4	3
07111-20810	M8	4,1	10,3	5,5	4
07111-20812	M8	4,1	12,3	5,5	4
07111-20816	M8	4,1	16,3	5,5	4
07111-20820	M8	4,1	20,3	5,5	4
07111-20825	M8	4,1	25,3	5,5	4
07111-20830	M8	4,1	30,3	5,5	4
07111-20850	M8	4,1	50,3	5,5	4
07111-20860	M8	4,1	60,3	5,5	4
07111-20880	M8	4,1	80,3	5,5	4
07111-21012	M10	5,6	12,3	7	5
07111-21016	M10	5,6	16,3	7	5
07111-21020	M10	5,6	20,3	7	5
07111-21025	M10	5,6	25,3	7	5
07111-21035	M10	5,6	35,3	7	5
07111-21216	M12	7	16,2	8,5	6
07111-21220	M12	7	20,2	8,5	6
07111-21230	M12	7	30,2	8,5	6
07111-21240	M12	7	40,2	8,5	6
07111-21620	M16	10,7	20	12	8
07111-21625	M16	10,7	25	12	8
07111-21635	M16	10,7	35	12	8
07111-21650	M16	10,7	50	12	8

Ball-end thrust screws without head

stainless steel with flattened ball and rotation lock

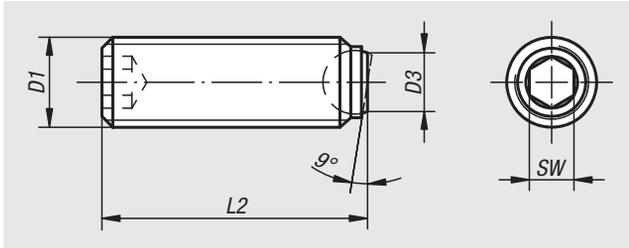

Material:
Screw and ball stainless steel.

Version:
Stainless steel bright.

Sample order:
nlm 07111-50612

Note:
Surfaces which are not flat and parallel can be firmly clamped or supported with with a flattened ball, the movable ball can adapt itself up to 9°.
Longer versions have been designed especially to be glued in. This allows mechanical connecting elements with external thread to be made cost-effectively for small and medium-sized series.
The ball has a rotation lock.

Order No.	D1	D3	L2	Ball-Ø	SW
07111-50612	M6	3	12,1	4	3
07111-50616	M6	3	16,1	4	3
07111-50620	M6	3	20,1	4	3
07111-50625	M6	3	25,1	4	3
07111-50816	M8	4,1	16,3	5,5	4
07111-50820	M8	4,1	20,3	5,5	4
07111-50825	M8	4,1	25,3	5,5	4
07111-50830	M8	4,1	30,3	5,5	4
07111-51020	M10	5,6	20,3	7	5
07111-51025	M10	5,6	25,3	7	5
07111-51035	M10	5,6	35,3	7	5
07111-51040	M10	5,6	40,2	7	5
07111-51220	M12	7	20,2	8,5	6
07111-51230	M12	7	30,2	8,5	6
07111-51240	M12	7	40,2	8,5	6
07111-51250	M12	7	50	8,5	6
07111-51635	M16	10,7	35	12	8
07111-51650	M16	10,7	50	12	8

Gripper pads round

carbide

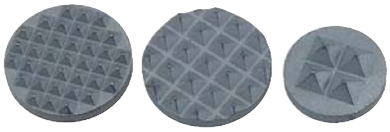

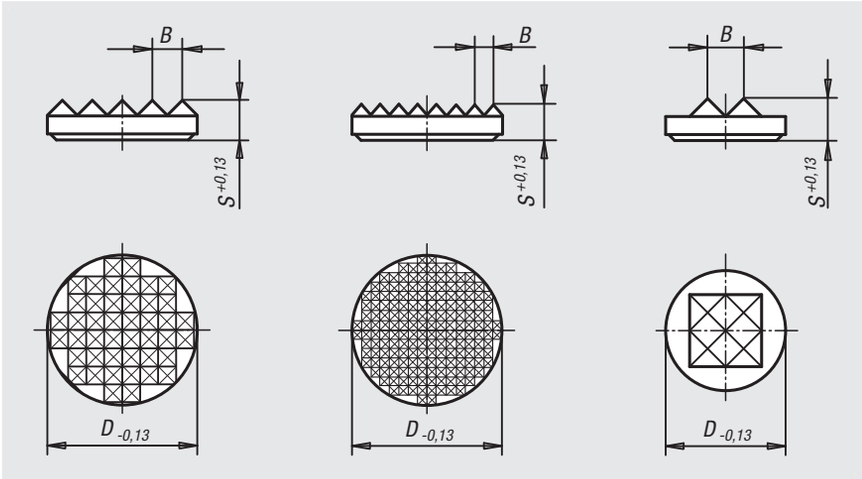

Material:
Carbide.

Version:
sintered.

Sample order:
nlm 07112-211

Note:
These carbide gripper pads are available as 4-point or serrated. They have many uses i.e. they can be glued onto cast iron base plates.

Order No.	Type	D	S	B
07112-110	serrated	6,35	3,2	2,3
07112-111	serrated	7,9	3,2	2,3
07112-112	serrated	9,5	3,2	3
07112-113	serrated	12,7	3,2	3
07112-114	serrated	19,05	3,2	3
07112-211	fine serrated	7,9	3,2	1,5
07112-212	fine serrated	9,5	3,2	2,3
07112-213	fine serrated	12,7	3,2	2,3
07112-214	fine serrated	19,05	3,2	2,3
07112-215	fine serrated	25,4	4	2,3
07112-411	4-point contact	7,9	3,2	3
07112-412	4-point contact	9,5	3,2	3
07112-413	4-point contact	12,7	4	3,5

Notes

Grippers and inserts round

Material:
Form C, F, M tool steel
Form E, O, P stainless steel
Form K POM

Version:
Form C hardened and black oxidised.
Form E hardened, bright.
Form K white.
Form O with diamond impregnated surface comparable to 100 grade abrasive grit.
Form P with polyurethane surface, hardness 60 Shore.
Form F, hardened and black oxidised.
Form M with carbide serrations, black oxidised.

Sample order:
nlm 07113-2510

Note:
Grippers and inserts are ideal for use in clamping arms, gripping systems, clamping fixtures, clamping jaws and self-aligning pads. The use of grippers allows the transfer of very high torque values and above average grip, even with hard materials and surface irregularities.

Form O: The abrasive diamond surface is bonded firmly to the base. It is ideally suited to supporting smooth or slippery applications with a minimum of clamping pressure. This allows the diamond particles to get a firm grip on a very small area with minimum damage to the surface.
The diamond surface offers excellent wear resistance.

Form P: The polyurethane surface is vulcanised firmly to the ball. It is abrasion-resistant and does not discolour. It offers optimum protection against damage to delicate surfaces. The pearl-like surface gives a firm grip and allows air to escape so as to prevent any suction effect between the contact surface and the self-aligning pads.

Grippers and inserts can be fitted in the following self-aligning pads:
Order No. 02003-117X022 up to 02003-936X036
Order No. 02007-110X015 up to 02007-924X100
Order No. 02007-120X030 up to 02007-924X080

Form C, E, K

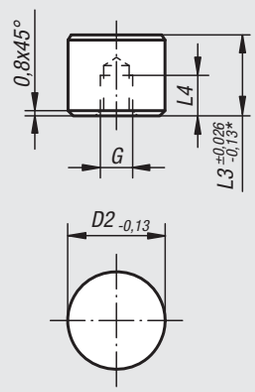

* Applies to Form K

Form O
stainless steel insert
diamond impregnated

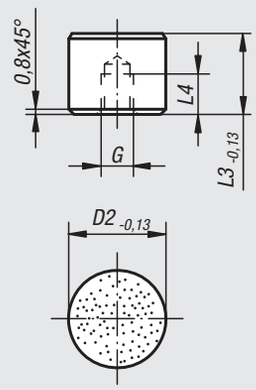

Form P
stainless steel insert,
PUR surface

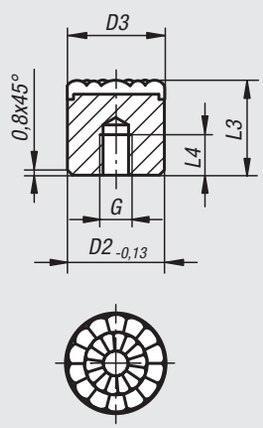

Form F
diamond grip insert

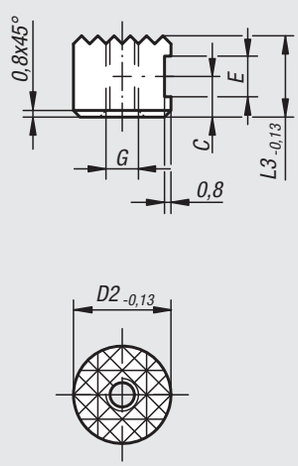

Form M
carbide steel
diamond grip insert

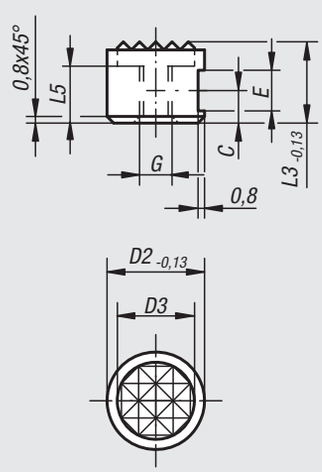

Grippers and inserts round

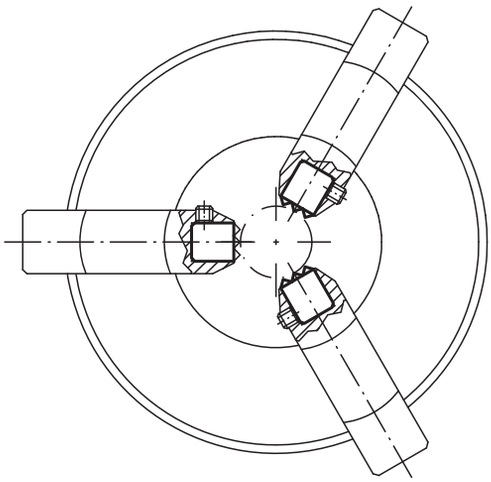

Order No. Form C	Order No. Form E	Order No. Form K	Order No. Form O	D2	L3	L4	G
07113-10108	**07113-10102**	**07113-10109**	**07113-10105**	10	10	5	M5
07113-10128	**07113-10122**	**07113-10129**	**07113-10125**	10	12	6,4	M5
07113-12108	**07113-12102**	**07113-12109**	**07113-12105**	12	10	5	M5
07113-12128	**07113-12122**	**07113-12129**	**07113-12125**	12	12	6,4	M5
07113-16108	**07113-16102**	**07113-16109**	**07113-16105**	16	10	5	M6
07113-16128	**07113-16122**	**07113-16129**	**07113-16125**	16	12	6,4	M6
07113-20108	**07113-20102**	**07113-20109**	**07113-20105**	20	10	5	M6
07113-20128	**07113-20122**	**07113-20129**	**07113-20125**	20	12	6,4	M6
07113-25108	**07113-25102**	**07113-25109**	**07113-25105**	25	10	5	M6
07113-25128	**07113-25122**	**07113-25129**	**07113-25125**	25	12	6,4	M6

Order No.	Form	D2	D3	L3	L4	G
07113-08126	P	8	8	12	6	M4
07113-10126	P	10	10	12	6	M5
07113-12126	P	12	13	12	6	M5
07113-16126	P	16	16	12	6	M6
07113-20126	P	20	21	12	6	M6
07113-25126	P	25	27	12	6	M6

Order No. Form F	Order No. Form M	D2	D3	L3	L5	C	E	G
07113-1010	**07113-10107**	10	-/7,9	10	-/6	4,5	4,75	M5
07113-1210	**07113-12107**	12	-/9,5	10	-/6	4,5	4,75	M5
07113-1212	**07113-12127**	12	-/9,5	12	-/7	6	4,75	M5
07113-1610	**07113-16107**	16	-/12,7	10	-/6	4,5	4,75	M6
07113-2010	**07113-20107**	20	-/15,9	10	-/6	4,5	4,75	M6
07113-2510	**07113-25107**	25	-/19	10	-/6	4,5	4,75	M6

Grippers and inserts round

with counterbore

Material:
Form C, F tool steel
Form E, O stainless steel
Form K POM

Version:
Form C, F hardened and black oxidised.
Form E, hardened, bright.
Form K white.
Form O with diamond impregnated surface comparable to 100 grade abrasive grit.

Sample order:
nlm 07113-110108

Note:
Grippers and inserts are ideal for use in clamping arms, gripping systems, clamping fixtures, clamping jaws and self-aligning pads. The use of grippers allows the transfer of very high torque values and above average grip, even with hard materials and surface irregularities.

Form O: The abrasive diamond surface is bonded firmly to the base. It is ideally suited to supporting smooth or slippery applications with a minimum of clamping pressure. This allows the diamond particles to get a firm grip on a very small area with minimum damage to the surface.
The diamond surface offers excellent wear resistance.

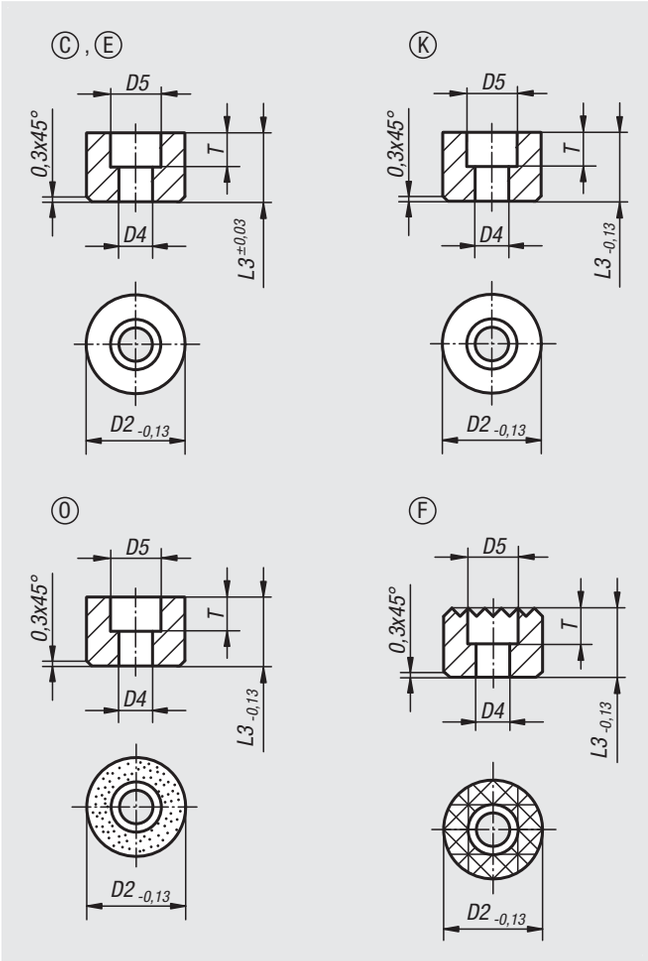

Order No. Form C	Order No. Form E	Order No. Form K	Order No. Form O	D2	D4	D5	L3	T
07113-110108	**07113-110102**	**07113-110109**	**07113-110105**	10	3,4	6	10	5
07113-110128	**07113-110122**	**07113-110129**	**07113-110125**	10	3,4	6	12	5
07113-112108	**07113-112102**	**07113-112109**	**07113-112105**	12	4,5	9	10	5,6
07113-112128	**07113-112122**	**07113-112129**	**07113-112125**	12	4,5	9	12	5,6
07113-116108	**07113-116102**	**07113-116109**	**07113-116105**	16	5,5	11	10	6,6
07113-116128	**07113-116122**	**07113-116129**	**07113-116125**	16	5,5	11	12	6,6
07113-120108	**07113-120102**	**07113-120109**	**07113-120105**	20	6,6	11	10	7,6
07113-120128	**07113-120122**	**07113-120129**	**07113-120125**	20	6,6	11	12	7,6
07113-125108	**07113-125102**	**07113-125109**	**07113-125105**	25	6,6	11	10	7,6
07113-125128	**07113-125122**	**07113-125129**	**07113-125125**	25	6,6	11	12	7,6

Round grippers

Order No.	Form	D2	D4	D5	L3	T
07113-11210	F	12	4,5	8	10	5,6
07113-11212	F	12	4,5	8	12	5,6
07113-11610	F	16	4,5	8	10	5,6
07113-11612	F	16	4,5	8	12	5,6
07113-12010	F	20	5,5	10	10	6,6
07113-12012	F	20	5,5	10	12	6,6
07113-12510	F	25	6,6	11	10	7,6
07113-12512	F	25	6,6	11	12	7,6

Grippers hexagonal

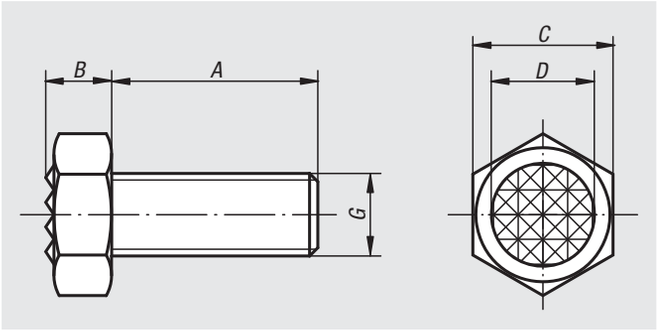

Material:
Hex head screw, grade 10.9.
Serrations carbide, hardness 72-74 HRC.

Version:
Black oxidised.

Sample order:
nlm 07114-1710

Note:
The serrated carbide tips are soldered in.

Order No.	A	B	C	D	G	Serration
07114-1006	25	5	10	7,9	M6	extra fine
07114-1308	25	6,4	13	9,5	M8	fine
07114-1710	25	8,3	17	12,7	M10	fine
07114-17102	40	8,3	17	12,7	M10	fine
07114-1912	25	8,7	19	15,9	M12	fine
07114-19122	40	8,7	19	15,9	M12	fine
07114-2416	35	11	24	19	M16	fine
07114-24162	50	11	24	19	M16	fine
07114-3020	40	13,7	30	25,4	M20	extra fine
07114-30202	60	13,7	30	25,4	M20	extra fine

Application: norelem grippers

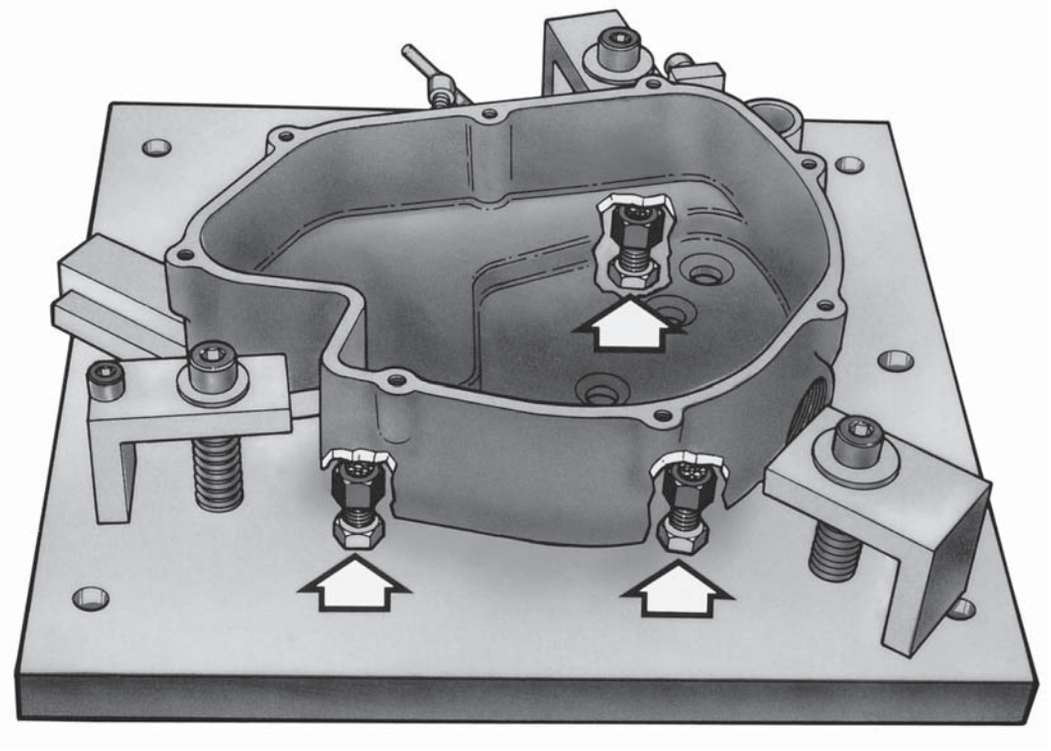

Grippers square

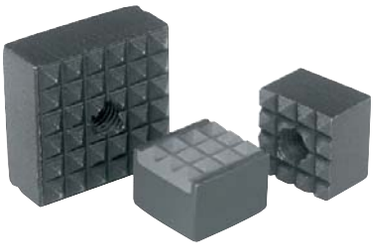

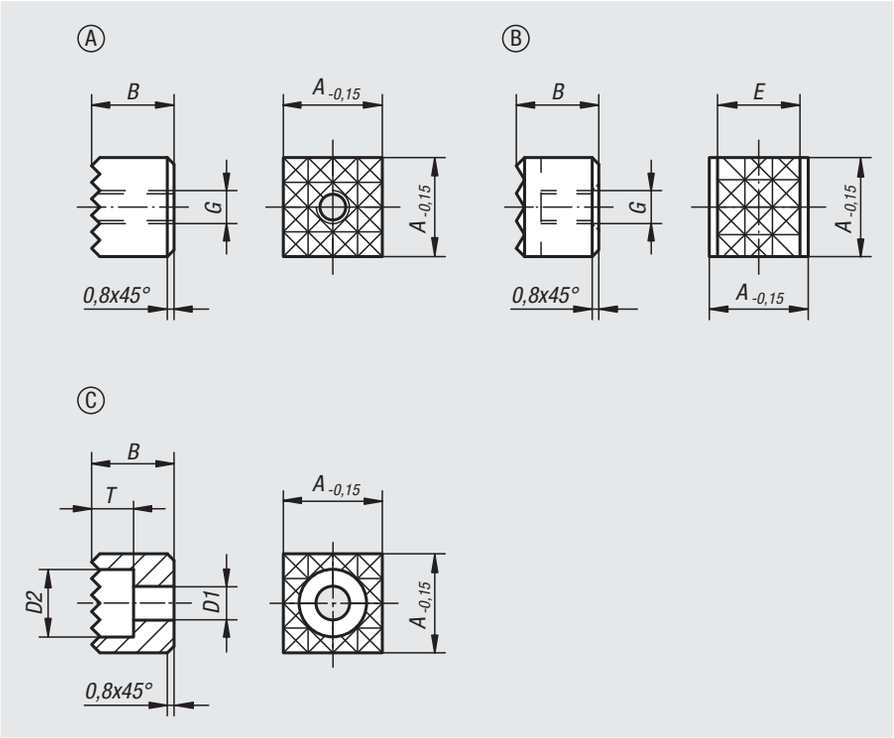

Material:
Hardened tool steel or carbide.

Version:
Black oxidised.

Sample order:
nlm 07115-2506

Note:
Grippers and inserts are ideal for use in clamping arms, gripping systems, clamping fixtures, clamping jaws and self-aligning pads.
Grippers transfer very high torque values,even with hard materials and surface irregularities. Grippers guarantee above average holding forces at high cutting forces.
The serrated carbide tips are soldered in.

Drawing reference:
Form A: tool steel
Form B: tool steel, carbide diamond grip
Form C: tool steel

Order No.	Form	A	B	D1	D2	E	G	T	Serration
07115-1005	A	10	10	-	-	-	M5	-	extra fine
07115-101205	A	10	12	-	-	-	M5	-	extra fine
07115-1205	A	12	10	-	-	-	M5	-	fine
07115-121205	A	12	12	-	-	-	M5	-	fine
07115-1606	A	16	10	-	-	-	M6	-	fine
07115-161206	A	16	12	-	-	-	M6	-	fine
07115-2005	A	20	10	-	-	-	M5	-	fine
07115-201205	A	20	12	-	-	-	M5	-	fine
07115-2506	A	25	10	-	-	-	M6	-	fine
07115-251206	A	25	12	-	-	-	M6	-	fine
07115-12057	B	12	10	-	-	10,3	M5	-	fine
07115-1210048	C	12	10	4,5	8	-	-	5,6	fine
07115-1212048	C	12	12	4,5	8	-	-	5,6	fine
07115-1610048	C	16	10	4,5	8	-	-	5,6	fine
07115-1612048	C	16	12	4,5	8	-	-	5,6	fine
07115-2010058	C	20	10	5,5	10	-	-	6,6	fine
07115-2012058	C	20	12	5,5	10	-	-	6,6	fine
07115-2510068	C	25	10	6,6	11	-	-	7,6	fine
07115-2512068	C	25	12	6,6	11	-	-	7,6	fine

Gripper pads square

carbide

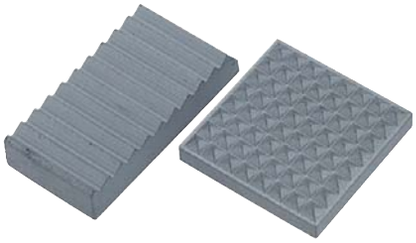

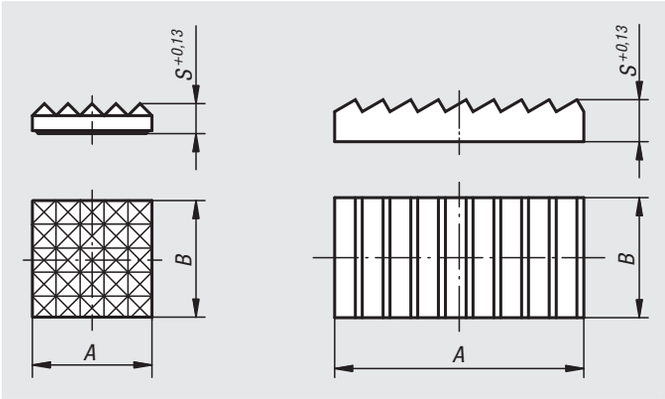

Material:
Carbide.

Version:
sintered.

Sample order:
nlm 07116-201

Note:
These carbide gripper pads are available as serrated or wedge grips. They have many uses i.e. they can be glued onto cast iron base plates.

Order No.	Type	A	B	S
07116-101	serrated	9,5 -0,13	9,5 -0,13	3,2
07116-102	serrated	12,7 -0,13	12,7 -0,13	3,2
07116-201	fine serrated	9,5 -0,13	9,5 -0,13	3,2
07116-202	fine serrated	12,7 -0,13	12,7 -0,13	3,2
07116-203	fine serrated	15,9 -0,13	15,9 -0,13	3,2
07116-206	fine serrated	19,05 -0,13	19,05 -0,13	4
07116-207	fine serrated	25,4 -0,13	25,4 -0,13	4
07116-308	wedge-shaped	25,7 +0,5	13,05 -0,13	4,8
07116-309	wedge-shaped	38,4 +0,5	19,5	6,35

Grippers adjustable

Material:
Hardened tool steel or carbide.

Version:
Black oxidised.

Sample order:
nlm 07117-5012

Note:
The full thread on the grippers allows exact adjustment to the clamping application.
The carbide tips are soldered in.

Drawing reference:
Form A: tool steel
Form B: tool steel, carbide diamond grip
Form C: 4-point carbide insert

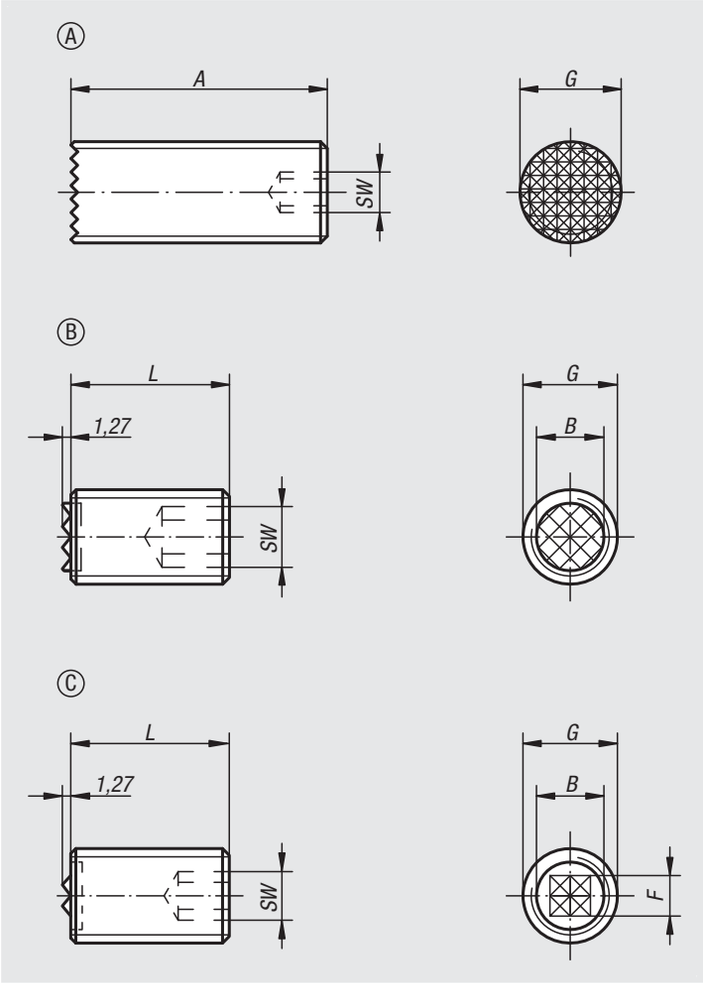

Order No.	Form	A	L	B	G	F	SW
07117-4010	A	40	-	-	M10	-	3
07117-4012	A	40	-	-	M12	-	5
07117-4016	A	40	-	-	M16	-	6
07117-4020	A	40	-	-	M20	-	8
07117-2510	B	-	25	6,4	M10	-	5
07117-5010	B	-	50	6,4	M10	-	5
07117-2512	B	-	25	7,9	M12	-	6
07117-5012	B	-	50	7,9	M12	-	6
07117-2516	B	-	25	11,2	M16	-	8
07117-5016	B	-	50	11,2	M16	-	8
07117-2520	B	-	25	12,7	M20	-	10
07117-5020	B	-	50	12,7	M20	-	10
07117-25124	C	-	25	7,9	M12	6,5	6
07117-50124	C	-	50	7,9	M12	6,5	6
07117-25164	C	-	25	11,2	M16	8	8
07117-50164	C	-	50	11,2	M16	8	8
07117-25204	C	-	25	12,7	M20	8	10
07117-50204	C	-	50	12,7	M20	8	10

Thrust screws

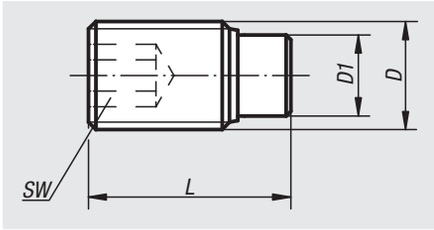

Material:
Screw grade 10.9.
Pin brass or POM.

Version:
Screw black oxidised.

Sample order:
nlm 07119-04X105 (include length L)

Note:
Thrust screws are ideal for clamping or exerting pressure on threaded spindles, axles, shafts and treated surfaces without marring.

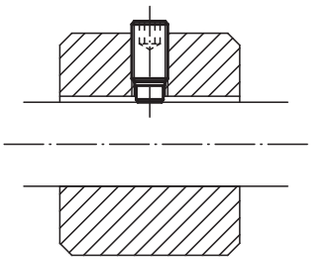

Order No.	Component material	D	D1	L	SW
07119-04X	brass	M4	2,5	6,5/10,5/16,5/30,5/40,5	2
07119-05X	brass	M5	3	8,5/12,5/20,5/30,5/40,5	2,5
07119-06X	brass	M6	4	11,5/17,5/26,5/41,5/51,5/61,5	3
07119-08X	brass	M8	5,5	12/22/32/52/62/82	4
07119-10X	brass	M10	7	14/18/27/37/52/62/82	5
07119-12X	brass	M12	8,5	18,5/22,5/32,5/42,5/52,5/62,5/82,5	6

Order No.	Component material	D	D1	L	SW
07119-104X	polyacetal	M4	2	7/9/11/13/17/31/41	2
07119-105X	polyacetal	M5	3	9/11/13/17/21/31/41	2,5
07119-106X	polyacetal	M6	3,5	11,3/13,3/17,3/21,3/26,3/41,3/51,3/61,3	3
07119-108X	polyacetal	M8	5	13,6/17,6/21,6/26,6/33,6/51,6/61,6/81,6	4
07119-110X	polyacetal	M10	6,5	17,9/21,9/26,9/33,9/41,9/51,9/61,9/81,9	5
07119-112X	polyacetal	M12	8	22,1/27,1/34,1/42,1/52,1/62,1/82,1	6

Thrust screws stainless steel

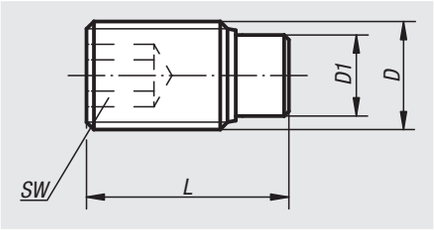

Material:
Screw stainless steel.
Pin brass or POM.

Version:
Screw bright.

Sample order:
nlm 07119-041X105 (include length L)

Note:
Thrust screws are ideal for clamping or exerting pressure on threaded spindles, axles, shafts and treated surfaces without marring.

Order No.	Component material	D	D1	L	SW
07119-041X	brass	M4	2,5	6,5/10,5/16,5/30,5/40,5	2
07119-051X	brass	M5	3	8,5/12,5/20,5/30,5/40,5	2,5
07119-061X	brass	M6	4	11,5/13,5/17,5/21,5/26,5/41,5/51,5/61,5	3
07119-081X	brass	M8	5,5	12/22/32/52/62/82	4
07119-101X	brass	M10	7	14/18/27/37	5
07119-121X	brass	M12	8,5	22,5/32,5/42,5	6

Order No.	Component material	D	D1	L	SW
07119-1041X	polyacetal	M4	2	7/9/11/13/17/31/41	2
07119-1051X	polyacetal	M5	3	9/11/13/17/21/31/41	2,5
07119-1061X	polyacetal	M6	3,5	11,3/13,3/17,3/21,3/26,3/41,3/51,3/61,3	3
07119-1081X	polyacetal	M8	5	13,6/17,6/21,6/26,6/33,6/51,6/61,6/81,6	4
07119-1101X	polyacetal	M10	6,5	17,9/21,9/26,9/36,9	5
07119-1121X	polyacetal	M12	8	22,1/32,1/42,1	6

Thrust screws

LONG-LOK secured

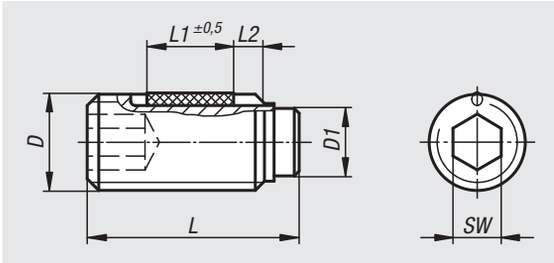

Material:
Screw grade 10.9.
Pin brass or POM.
LONG-LOK thread lock nylon.

Version:
Screw black oxidised.

Sample order:
nlm 07119-204X65 (include length L)

Note:
Thrust screws are ideal for clamping or exerting pressure on threaded spindles, axles, shafts and treated surfaces without marring.

Drawing reference:
L2 = approx. 2x thread pitch

Order No.	Component material	D	D1	L (L1)	SW
07119-204X	brass	M4	2,5	6,5 (2,5)/10,5 (3,5)/16,5 (5)/30,5 (5)/40,5 (5)	2
07119-205X	brass	M5	3	8,5 (3,5)/12,5 (5)/20,5 (6)/30,5 (6)/40,5 (6)	2,5
07119-206X	brass	M6	4	11,5 (3,5)/17,5 (7)/26,5 (7)/41,5 (7)/51,5 (7)/61,5 (7)	3
07119-208X	brass	M8	5,5	12 (3,5)/22 (8)/32 (8)/52 (8)/62 (8)/82 (8)	4
07119-210X	brass	M10	7	14 (5)/18 (9)/27 (9)/37 (9)/52 (9)/62 (9)/82 (9)	5
07119-212X	brass	M12	8,5	18,5 (8)/22,5 (10)/32,5 (10)/42,5 (10)/52,5 (10)/62,5 (10)/82,5 (10)	6

Order No.	Component material	D	D1	L (L1)	SW
07119-304X	polyacetal	M4	2	7 (2,5)/9 (3,5)/11 (3,5)/13 (5)/17 (5)/31 (5)/41 (5)	2
07119-305X	polyacetal	M5	3	9 (3,5)/11 (3,5)/13 (5)/17 (6)/21 (6)/31 (6)/41 (6)	2,5
07119-306X	polyacetal	M6	3,5	11,3 (3,5)/13,3 (5)/17,3 (7)/21,3 (7)/26,3 (7)/41,3 (7)/51,3 (7)/61,3 (7)	3
07119-308X	polyacetal	M8	5	13,6 (5)/17,6 (8)/21,6 (8)/26,6 (8)/33,6 (8)/51,6 (8)/61,6 (8)/81,6 (8)	4
07119-310X	polyacetal	M10	6,5	17,9 (9)/21,9 (9)/26,9 (9)/33,9 (9)/41,9 (9)/51,9 (9)/61,9 (9)/81,9 (9)	5
07119-312X	polyacetal	M12	8	22,1 (10)/27,1 (10)/34,1 (10)/42,1 (10)/52,1 (10)/62,1 (10)/82,1 (10)	6

07120

Grub screws

with thrust point DIN 6332

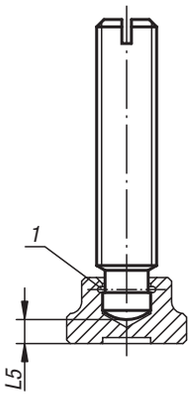

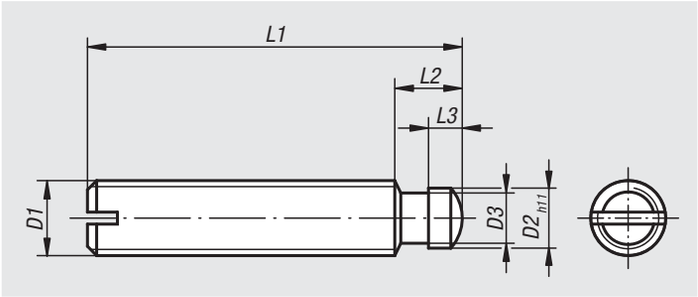

Material:
Steel or stainless steel

Version:
Steel: thrust point case-hardened, black.
Stainless steel: bright.

Sample order:
nlm 07120-12X60 (include length L1)

Note:
The thrust pin of the DIN 6332 grub screws is designed for direct clamping and for use together with thrust pads 07140.

Drawing reference:
1) snap ring

Order No. steel	Order No. stainless steel	D1	L1	D2	D3	L2	L3	L5
07120-06X	**07120-061X**	M6	30/35/40/50	4,5	4	6	2,5	2,2
07120-08X	**07120-081X**	M8	35/40/45/50/60	6	5,4	7,5	3	3
07120-10X	**07120-101X**	M10	50/55/60/65/80	8	7,2	9	4,5	3,6
07120-12X	**07120-121X**	M12	60/65/70/80/100	8	7,2	10	4,5	4,5
07120-14X	**07120-141X**	M14	60/80/100	10	9	12	5	5
07120-16X	**07120-161X**	M16	65/70/80/100/125	12	11	12	5	5,3
07120-20X	**07120-201X**	M20	80/90/100/125/150	15,5	14,4	14	5,5	5,6

07121

Grub screws

with ball thrust point

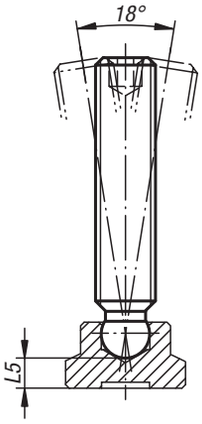

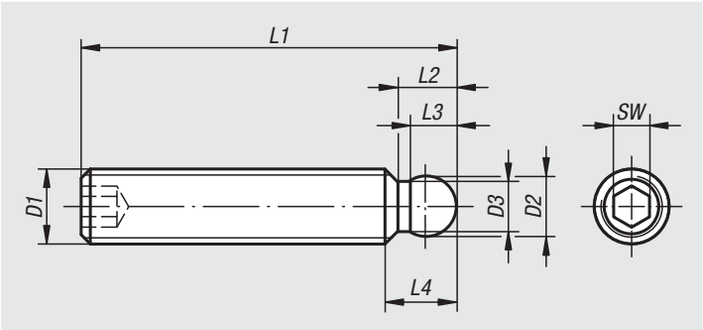

Material:
Steel grade 5.8.

Version:
Black oxidised.

Sample order:
nlm 07121-06X50 (include length L1)

Note:
These grub screws are used together with the thrust pads 07142 for clamping.

Order No.	D1	L1	D2	D3	L2	L3	L4	L5	SW
07121-06X	M6	30/35/40/50	4,5	3,5	4,3	3,7	5,5	3,8	3
07121-08X	M8	35/40/45/50/60	6	4,8	5,8	4,8	7,4	4,4	4
07121-10X	M10	50/55/60/65/80	8	6,5	7,2	6,3	9	5	5
07121-12X	M12	60/65/70/80	8	6,5	7,2	6,3	9,8	6,9	6

Thrust screws

with point

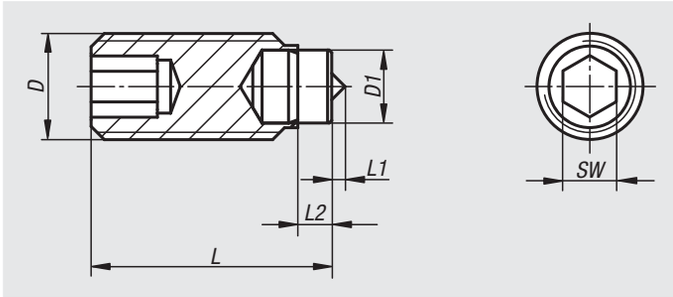

Material:
Screw steel grade 10.9.
Pin tool steel.

Version:
Pin, hardened.
Screw and pin black oxidised.

Sample order:
nlm 07122-05X09

Note:
These thrust screws with point are used when additional positive fixation is required.

Order No.	D	D1	L	L1	L2	SW	Load rating max. kN (static load only)
07122-05X09	M5	3	8,5	0,5	1,3	2,5	4,5
07122-05X13	M5	3	12,5	0,5	1,3	2,5	4,5
07122-05X17	M5	3	16,5	0,5	1,3	2,5	4,5
07122-05X21	M5	3	20,5	0,5	1,3	2,5	4,5
07122-06X14	M6	4	13,5	0,8	1,9	3	9
07122-06X18	M6	4	17,5	0,8	1,9	3	9
07122-06X22	M6	4	21,5	0,8	1,9	3	9
07122-06X27	M6	4	26,5	0,8	1,9	3	9
07122-08X14	M8	5,5	14	1	2,4	4	15
07122-08X18	M8	5,5	18	1	2,4	4	15
07122-08X22	M8	5,5	22	1	2,4	4	15
07122-08X27	M8	5,5	27	1	2,4	4	15
07122-08X34	M8	5,5	34	1	2,4	4	15
07122-10X18	M10	7	18	1,5	2,6	5	20
07122-10X22	M10	7	22	1,5	2,6	5	20
07122-10X27	M10	7	27	1,5	2,6	5	20
07122-10X34	M10	7	34	1,5	2,6	5	20
07122-10X42	M10	7	42	1,5	2,6	5	20

Thrust screws

with radiused half-dog point

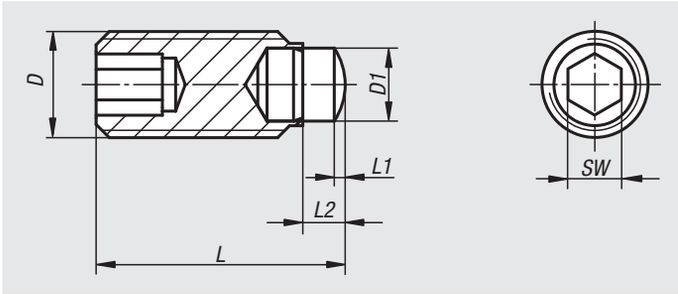

Material:
Screw steel grade 10.9.
Pin tool steel.

Version:
Pin, hardened.
Screw and pin black oxidised.

Sample order:
nlm 07123-05X09

Note:
These rounded half-dog point thrust screws are used when a punctiform thrust or support point are required.

Order No.	D	D1	L	L1	L2	SW	Load rating max. kN (static load only)
07123-05X09	M5	3	9	0,5	1,8	2,5	4,5
07123-05X13	M5	3	13	0,5	1,8	2,5	4,5
07123-05X17	M5	3	17	0,5	1,8	2,5	4,5
07123-05X21	M5	3	21	0,5	1,8	2,5	4,5
07123-06X14	M6	4	14,3	0,8	2,7	3	9
07123-06X18	M6	4	18,3	0,8	2,7	3	9
07123-06X22	M6	4	22,3	0,8	2,7	3	9
07123-06X27	M6	4	27,3	0,8	2,7	3	9
07123-08X15	M8	5,5	14,8	0,8	3,2	4	15
07123-08X19	M8	5,5	18,8	0,8	3,2	4	15
07123-08X23	M8	5,5	22,8	0,8	3,2	4	15
07123-08X28	M8	5,5	27,8	0,8	3,2	4	15
07123-08X35	M8	5,5	34,8	0,8	3,2	4	15
07123-10X19	M10	7	18,9	1,1	3,5	5	20
07123-10X23	M10	7	22,9	1,1	3,5	5	20
07123-10X28	M10	7	27,9	1,1	3,5	5	20
07123-10X35	M10	7	34,9	1,1	3,5	5	20
07123-10X43	M10	7	42,9	1,1	3,5	5	20

Torque grips

precision version

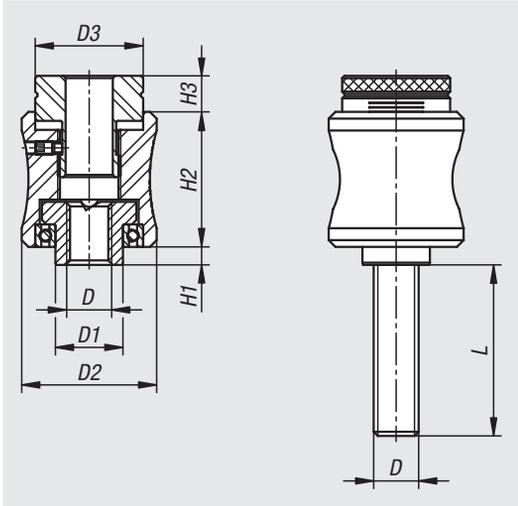

Material:
Grip and set screw aluminium.
Bush and pin steel 5.8.

Version:
Grip and set screw anodized.
Bush and pin galvanized.

Sample order:
nlm 07124-106X30

Note:
The required torque is set by a set screw and a graduated scale. The set value can be secured using the lateral clamping screw. When the set torque is reached the grip audibly and palpably releases. The loosening torque is higher than the tightening torque so that the torque handle can be released without any problems.

The internal thread version has a hole in the set screw so that the torque handle can also be used on threaded rods.

Set torque accuracy ± 5%.

On request:
Other thread lengths.

Internal thread

Order No.	Size	D	D1	D2	D3	H1	H2	H3	Adjustable torque approx. Nm min. - max.
07124-105	1	M5	10	26	20	2	26	8	0,05 - 0,1
07124-106	1	M6	10	26	20	2	26	8	0,1 - 0,25
07124-208	2	M8	15	30	24	4	30	8	0,25 - 0,5
07124-210	2	M10	15	30	24	4	30	8	0,5 - 1

External thread

Order No.	Size	D	D1	D2	D3	H1	H2	H3	L	Adjustable torque approx. Nm min. - max.
07124-105X30	1	M5	10	26	20	2	26	8	30	0,05 - 0,15
07124-105X40	1	M5	10	26	20	2	26	8	40	0,05 - 0,15
07124-106X30	1	M6	10	26	20	2	26	8	30	0,1 - 0,25
07124-106X40	1	M6	10	26	20	2	26	8	40	0,1 - 0,25
07124-208X40	2	M8	15	30	24	4	30	8	40	0,25 - 0,5
07124-208X50	2	M8	15	30	24	4	30	8	50	0,25 - 0,5
07124-210X40	2	M10	15	30	24	4	30	8	40	0,5 - 1
07124-210X50	2	M10	15	30	24	4	30	8	50	0,5 - 1

Knurled torque knobs

Material:
Thermoplastic, black grey.
Bush and screw steel 5.8.

Version:
Bush black oxidised.
Screw blue passivated.

Sample order:
nlm 07125-2056X30 (cap colour traffic red; include length L)

Note:
The set screw sets the required torque. The knob de-clutches and turns freely when the desired torque is reached.

Δ Add the desired cap colour here. No colour code is required for black grey caps.

Drawing reference:
1) adjusting screw for setting the torque

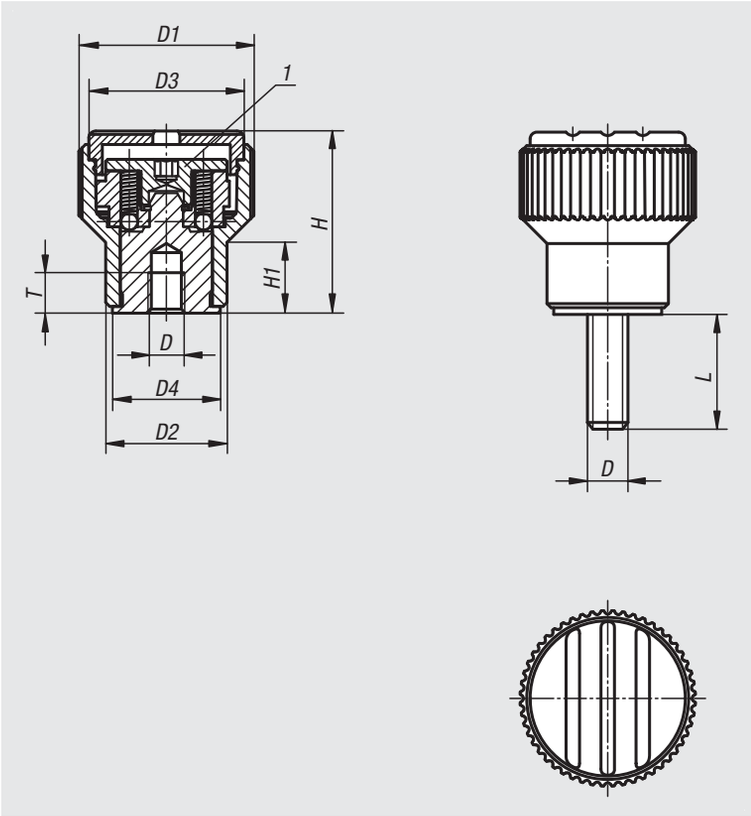

black grey	light grey Δ = 5	traffic red Δ = 6	bright yellow Δ = 7
RAL 7021	RAL 7035	RAL 3020	RAL 1021

Internal thread

Order No.	Component material	Size	D	D1	D2	D3	D4	H	H1	T	Adjustable torque approx. Nm min. - max.
07125-205Δ	steel	2	M5	26	18	23	16	27	10,5	5	0,1 - 0,3
07125-206Δ	steel	2	M6	26	18	23	16	27	10,5	6	0,1 - 0,3
07125-306Δ	steel	3	M6	34	22	31	20	37,5	14,5	10	0,1 - 0,3
07125-308Δ	steel	3	M8	34	22	31	20	37,5	14,5	14	0,1 - 0,3

External thread

Order No.	Component material	Size	D	D1	D2	D3	D4	H	H1	L	Adjustable torque approx. Nm min. - max.
07125-205ΔX	steel	2	M5	26	18	23	16	27	10,5	30/50	0,1 - 0,3
07125-206ΔX	steel	2	M6	26	18	23	16	27	10,5	30/50	0,1 - 0,3
07125-306ΔX	steel	3	M6	34	22	31	20	37,5	14,5	40/60	0,1 - 0,3
07125-308ΔX	steel	3	M8	34	22	31	20	37,5	14,5	40/60	0,1 - 0,3

Triangular torque grips

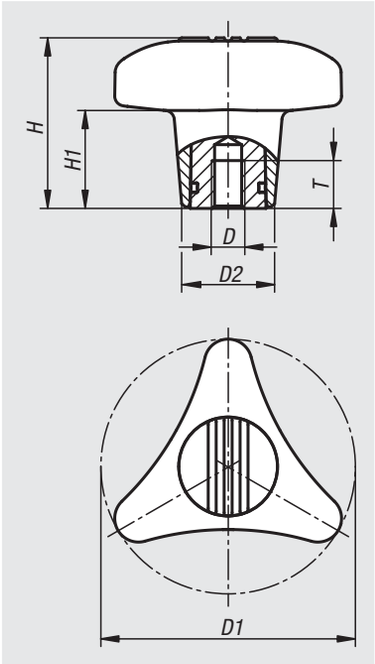

Material:
Grip glass-bead reinforced thermoplastic.
Cap thermoplastic.
Metal parts hardened stainless steel.

Version:
Grip and cap, black grey (RAL 7021).
Stainless steel parts, electropolished.

Sample order:
nlm 07126-180085

Note:
An audible click signals when the maximum torque has been reached. The grip can only be tightened with the maximum torque specified in the table.

On request:
Other internal threads, maximum torques and colours.

Order No.	D	D1	D2	H	H1	T	Max. torque Nm
07126-180085	M8	80	29,2	53,5	31	13	5
07126-180105	M10	80	29,2	53,5	31	13	5
07126-180125	M12	80	29,2	53,5	31	13	5

07130

Torque screws

with thrust point

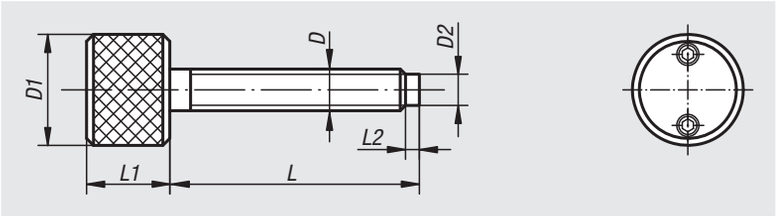

Material:
Steel.

Version:
Black oxidised.

Sample order:
nlm 07130-08X60 (include length L)

Note:
The torque required for the knurled screw is generated by two spring-mounted thrust balls.
As soon as the adjustable final pressure is reached, the grip runs free.
The final pressure is set using the set screws located in the head.

Forces:
F1 = Minimum final pressure
F2 = Maximum final pressure

Order No.	D	D1	D2	L	L1	L2	F1 N	F2 N
07130-06X	M6	25	4,7	40/60	20	3	40	800
07130-08X	M8	25	6,5	40/60/80	20	3	40	650
07130-10X	M10	25	8,2	40/60/80	20	3	40	550
07130-12X	M12	25	10	40/60/80/100	20	3	40	450

07131

Torque screws

with slot coupling

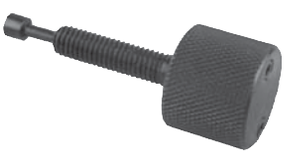

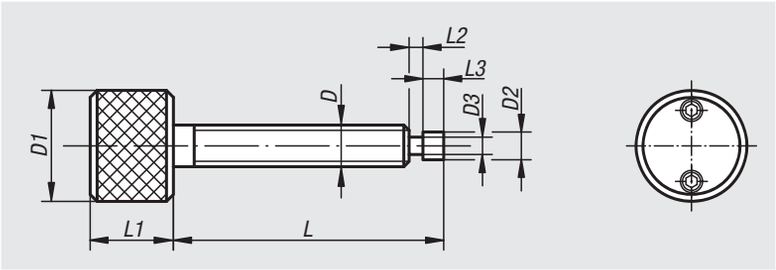

Material:
Steel.

Version:
Black oxidised.

Sample order:
nlm 07131-06

Note:
The torque required for the knurled screw is generated by two spring-mounted thrust balls.
As soon as the adjustable final pressure is reached, the grip runs free.
The final pressure is set using the set screws located in the head.

Forces:
F1 = Minimum final pressure
F2 = Maximum final pressure

Order No.	D	D1	D2	D3	L	L1	L2	L3	F1 N	F2 N
07131-06	M6	25	4,7	2,5	45	20	8	5	40	800
07131-10	M10	25	7,7	4,5	45	20	8	5	40	550

Torque screws

with support pin

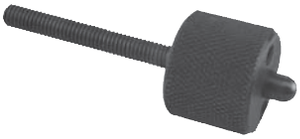

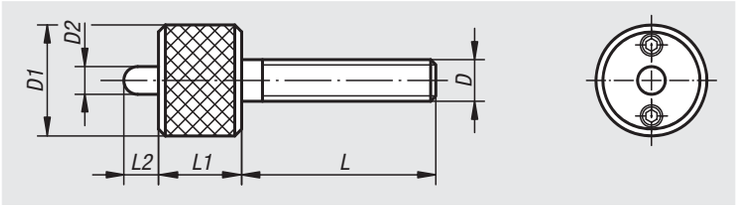

Material:
Steel.

Version:
Black oxidised.

Sample order:
nlm 07132-06

Note:
The torque required for the knurled screw is generated by two spring-mounted thrust balls.
As soon as the adjustable final pressure is reached, the grip runs free.
The final pressure is set using the set screws located in the head.

Forces:
F1 = Minimum final pressure
F2 = Maximum final pressure

Order No.	D	D1	D2	L	L1	L2	F1 N	F2 N
07132-06	M6	25	6	45	20	8	40	800
07132-10	M10	25	6	45	20	8	40	550
07132-12	M12	25	6	45	20	8	40	450

Torque grips

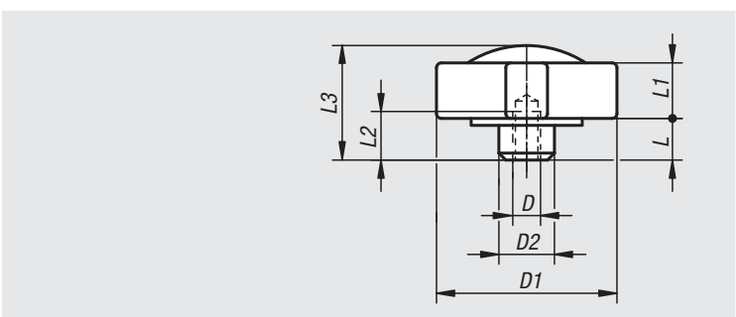

Material:
Nut: free cutting steel.
Handle: grey cast GJL 250.

Version:
Nut black oxidised.
Grip bright.

Sample order:
nlm 07133-08

Note:
The torque required for the grip is generated by two spring-mounted thrust balls.
As soon as the adjustable final pressure is reached, the grip runs free.
The final pressure is set using the set screws located in the head.

Forces:
F1 = Minimum final pressure
F2 = Maximum final pressure

Order No.	D	D1	D2	L	L1	L2	L3	F1 N	F2 N
07133-08	M8	60	20	12	22	13	40	40	900
07133-10	M10	60	20	12	22	13	40	40	700
07133-12	M12	60	20	12	22	13	40	40	500

07134

Torque screws

with ball thrust points

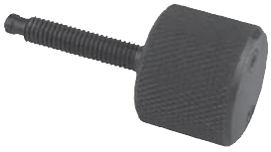

Material:
Steel.

Version:
Black oxidised.

Sample order:
nlm 07134-08X60 (include length L)

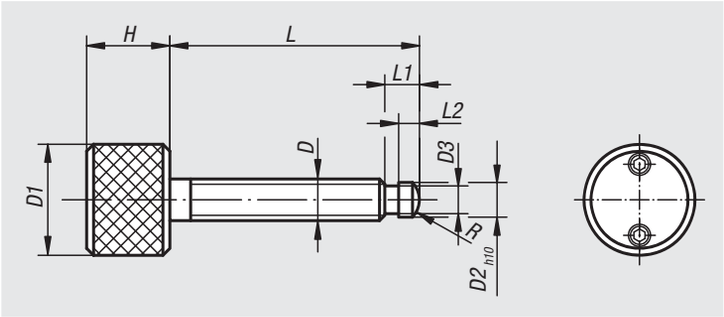

Note:
The torque required for the knurled screw is generated by two spring-mounted thrust balls.
As soon as the adjustable final pressure is reached, the grip runs free.
The final pressure is set using the set screws located in the head.
These torque screws are particularly useful when used together with thrust pads (07138, 07140 or 07141) for clamping sloping surfaces.

Forces:
F1 = Minimum final pressure
F2 = Maximum final pressure

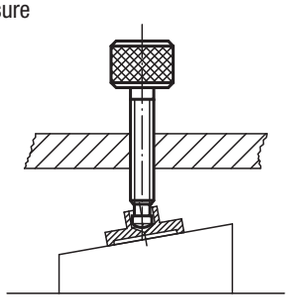

Order No.	D	D1	D2	D3	H	L	L1	L2	F1 N	F2 N	R
07134-06X	M6	25	4,5	4,1	20	40/60	6	2,5	40	800	3
07134-08X	M8	25	6	5,3	20	60/80	7,5	3	40	650	5
07134-10X	M10	25	8	7,2	20	60/80	9	4,5	40	550	6
07134-12X	M12	25	8	7,2	20	80/100	10	4,5	40	450	6

07138

Thrust pads

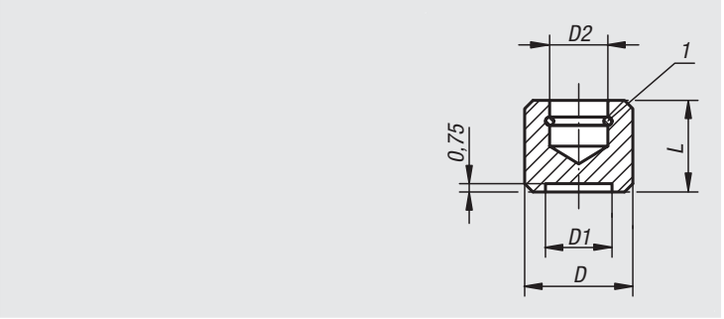

Material:
Thrust pad steel.
Snap ring spring steel.

Version:
Surface hardened and black oxidised.

Sample order:
nlm 07138-10

Note:
These thrust pads press lightly onto torque screws with ball thrust pins (07134) or grub screws with thrust pins (07120).
The ball end allows the thrust pad to adapt to the clamping surface.

Drawing reference:
1) snap ring

Order No.	D	D1	D2	L	Suitable for
07138-10	10	5	4,5	8	07120-06, 07134-06
07138-12	12	6	6	9	07120-08, 07134-08
07138-14	14	8	8	11	07120-10, 07120-12, 07134-10, 07134-12

07140

Thrust pads

DIN 6311 enhanced

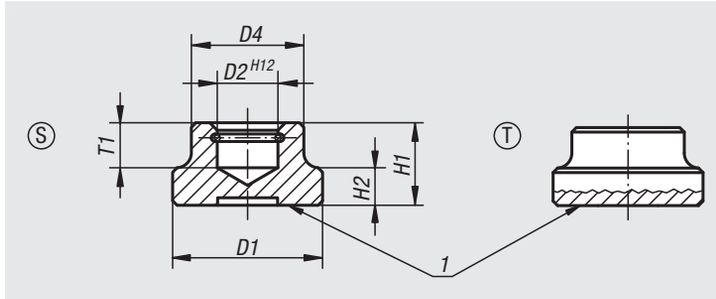

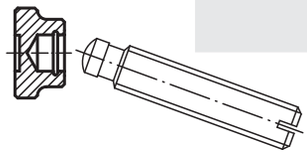

Material:
Steel: case-hardened. Snap ring spring steel.
Stainless steel: bright. Snap ring stainless steel.

Version:
Steel black oxidised.
Stainless steel bright.

Sample order:
nlm 07140-12

Note:
When fitting the thrust pad, ensure that it is inclined as far as possible in the direction of the snap ring opening. The snap ring is supplied assembled.

Drawing reference:
Form S: thrust pad with snap ring
Form T: low design, large clamping surface with snap ring

1) thrust face

Order No. steel	Order No. stainless steel	Form	D1	D2	D4	H1	H2	T1	For grub screws with trust point DIN 6332
07140-06	**07140-061**	S	12	4,6	10	7	2,5	4	M6
07140-08	**07140-081**	S	16	6,1	12	9	4	5	M8
07140-10	**07140-101**	S	20	8,1	15	11	5	6	M10
07140-12	**07140-121**	S	25	8,1	18	13	7	7	M12
07140-16	**07140-161**	S	32	12,1	22	15	7	7,5	M16
07140-20	**07140-201**	S	40	15,6	28	16	9	8	M20
07140-108	**-**	T	25	6,1	12	8	4	4,5	M8
07140-110	**-**	T	32	8,1	18	10	6	6	M10 / M12
07140-116	**-**	T	40	12,1	22	12	7	7	M16

07141

Thrust pads

with retaining pin

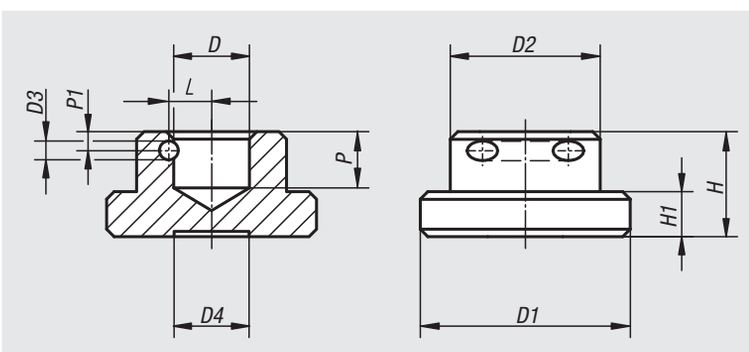

Material:
Steel.

Version:
Case-hardened and black oxidised.

Sample order:
nlm 07141-10

Note:
The pin is used to hold the pad on screw 07120.

Order No.	D	D1	D2	D3	D4	H	H1	L	P	P1
07141-06	4,6	12	10	2	5	7	2,5	3	4	1,6
07141-08	6,1	16	12	2	7	9	4	3,5	5	2
07141-10	8,1	20	15	2	8	11	5	4,6	7	2,7
07141-12	8,1	25	18	2	10	13	6	4,6	7	2,7
07141-14	10,1	28	20	2,5	10	14	6	5,7	7,5	2,5
07141-16	12,1	32	22	2,5	14	15	7	6,7	7,5	2,5
07141-20	15,6	40	28	2,5	18	16	9	8,3	8	3

Thrust pads

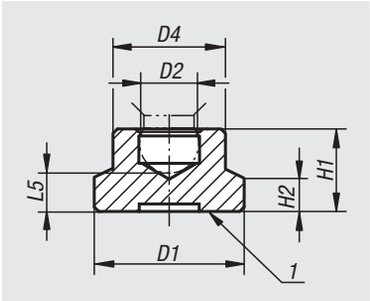

Material:
Steel.
PA 6 plastic.

Version:
Black oxidised.
Black plastic.

Sample order:
nlm 07142-08

Drawing reference:
1) thrust face

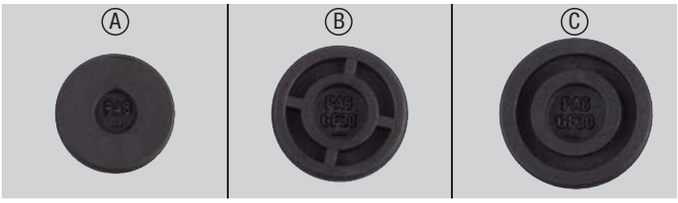

Order No.	Form	Main material	D1	D2	D4	H1	H2	L5	Suitable for grub screws
07142-06	A	steel	15	4,4	8,6	7,6	2,5	3,8	M6
07142-08	A	steel	18	5,9	12	9	3,5	4,4	M8
07142-10	A	steel	21	7,9	15	11	4	5	M10
07142-12	A	steel	25	7,9	18	13	5	6,9	M12
07142-206	A	polyamide	15	4,4	8,6	7,6	2,5	3,8	M6
07142-208	B	polyamide	18	5,9	12	9	3,5	4,4	M8
07142-210	C	polyamide	21	7,9	15	11	4	5	M10
07142-212	C	polyamide	25	7,9	18	13	5	6,9	M12

Thrust spindles

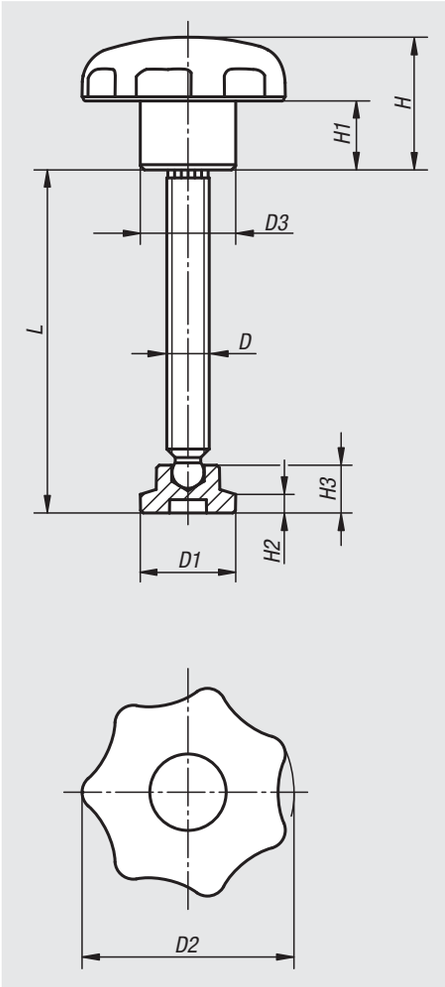

Material:
Star grip: thermoplastic.
Bush: steel.
Grub screw: steel, grade 5.8.
Thrust pad: plastic PA 6.

Version:
Star grip, thrust pad black.
Bush galvanized and blue passivated.
Grub screw black oxidised.

Sample order:
nlm 07143-06053

Note:
The thrust pad is supplied loose. It can be lightly pressed onto the end of the spindle.

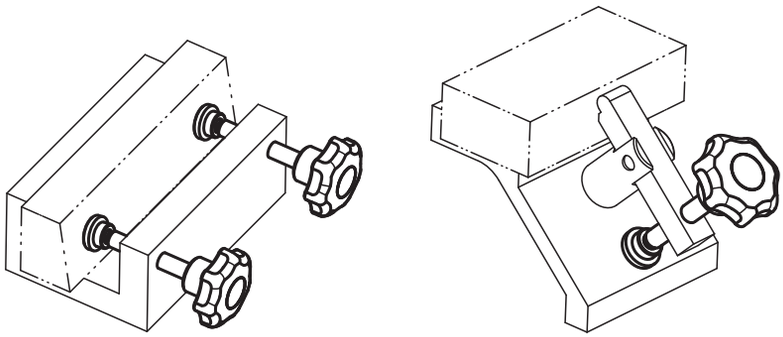

Order No.	D	D1	D2	D3	L	H	H1	H2	H3
07143-06053	M6	15	32	14	53,8	20	10	2,5	7,6
07143-08064	M8	18	40	18	64,6	25	13	3,5	9
07143-10070	M10	21	50	22	70,1	32	17	4	11
07143-12086	M12	25	63	26	86	40	21	5	13

Swivel feet

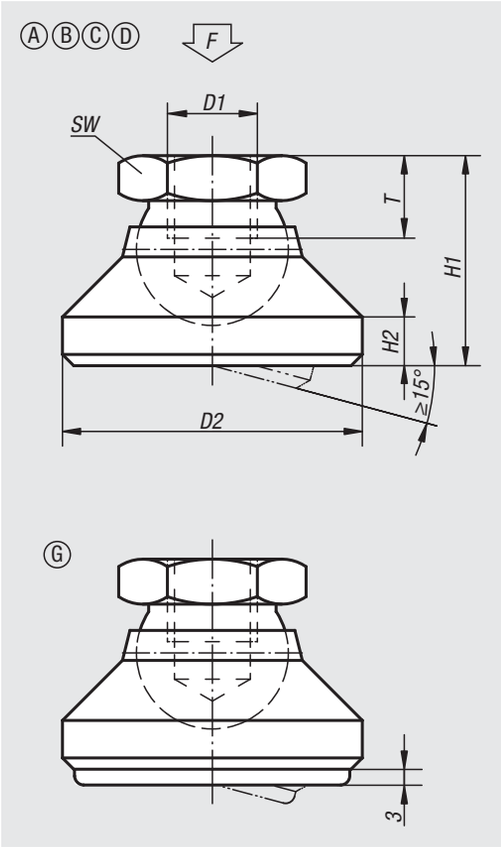

Material:
Form A: Thrust plate carbon steel, ball element free-cutting steel.
Form G: Ball element steel.
Form B: Stainless steel
Form C: Thrust plate POM, ball element free-cutting steel.
Form D: Thrust plate POM, ball element stainless steel

Anti-slip plate thermoplastic elastomer.

Version:
Form A, G: Ball element case-hardened, black oxidised.
Form G: Ball element case hardened, black oxidised with anti-slip plate
Form B: Bright.
Form C: Ball element case-hardened, black oxidised.
Form D: Ball element bright.

Sample order:
nlm 07144-112

Note:
The anti-slip plate absorbs vibrations and prevents the swivel foot slipping.

Order No. Form A	Order No. Form B	D1	D2	H1	H2	T	SW	Load rating max. kN (static load only)
07144-106	**07144-306**	M6	20	15	2,5	8,5	10	10
07144-108	**07144-308**	M8	25	18	4	9	13	18
07144-110	**07144-310**	M10	32	22	5	10	17	20
07144-112	**07144-312**	M12	40	26	6	12	19	35
07144-116	**07144-316**	M16	50	32	7	14	24	45
07144-120	**07144-320**	M20	60	42	8	18	30	55

Order No. Form C	Order No. Form D	D1	D2	H1	H2	T	SW	Load rating max. kN (static load only)
07144-506	**07144-206**	M6	20	15	2,5	8,5	10	4
07144-508	**07144-208**	M8	25	18	4	9	13	7
07144-510	**07144-210**	M10	32	22	5	10	17	10
07144-512	**07144-212**	M12	40	26	6	12	19	18
07144-516	**07144-216**	M16	50	32	7	14	24	20
07144-520	**07144-220**	M20	60	42	8	18	30	22

Order No. Form G	D1	D2	H1	H2	T	SW	Load rating max. kN (static load only)
07144-410	M10	32	22	5	10	17	12
07144-412	M12	40	26	6	12	19	17
07144-416	M16	50	32	7	14	24	20
07144-420	M20	60	42	8	18	30	24

Socket head screws

full thread, DIN 912 / DIN EN ISO 4762

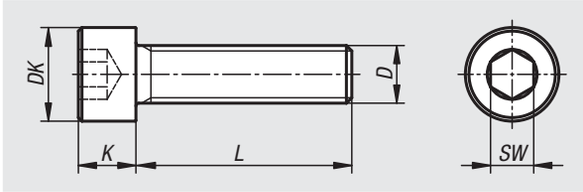

Material:
Steel.

Version:
Grade 8.8, black or galvanised.

Sample order:
nlm 07159-05X40 (include length L)

Order No.	Grade	Surface	D	L	DK	K	SW
07159-05X	8.8	-	M5	40/50/60/80	8,5	5	4
07159-06X	8.8	-	M6	40/50/60/70/90/100	10	6	5
07159-08X	8.8	-	M8	50/60/70/80/90	13	8	6
07159-10X	8.8	-	M10	50/60/70/80/90/100	16	10	8
07159-12X	8.8	-	M12	80/90/100	18	12	10
07159-405X	8.8	galvanized	M5	40/70/80	8,5	5	4
07159-406X	8.8	galvanized	M6	40/50/60/70/80/90/100	10	6	5
07159-408X	8.8	galvanized	M8	50/60/70/80/90/100	13	8	6
07159-410X	8.8	galvanized	M10	50/60/70/80/90/100	16	10	8
07159-412X	8.8	galvanized	M12	70/80/90/100	18	12	10

Socket head screws

DIN 912 / DIN EN ISO 4762, steel or stainless steel

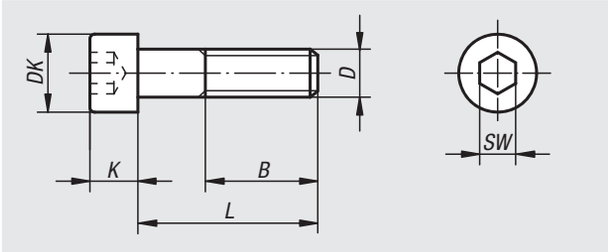

Material:
Steel or stainless steel (A 2)

Version:
Steel grade 8.8, black or galvanised.
Steel grade 10.9, black or galvanised.
Stainless steel A 2-70, bright.

Sample order:
nlm 07160-08X40 (include length L)

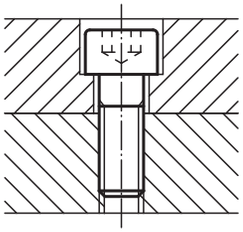

Order No. Grade 8.8	Order No. Grade 8.8 galvanised	D	L	B	DK	K	SW
07160-04X	**07160-404X**	M4	10/12/16/18/20/25	20	7	4	3
07160-05X	**07160-405X**	M5	10/12/16/18/20/25/30/40	22	8,5	5	4
07160-06X	**07160-406X**	M6	10/12/16/18/20/25/30/35/40/45/50/55/60	24	10	6	5
07160-08X	**07160-408X**	M8	16/18/20/25/30/35/40/45/50/60/70/80	28	13	8	6
07160-10X	**07160-410X**	M10	16/18/20/25/30/35/40/45/50/60/70/80/90/100	32	16	10	8
07160-12X	**07160-412X**	M12	20/25/30/35/40/45/50/60/70/80/90/100/110/120	36	18	12	10
07160-14X	**07160-414X**	M14	50/80/120	40	21	14	12
07160-16X	**07160-416X**	M16	30/35/40/45/50/60/70/80/90/100/110/120	44	24	16	14
07160-20X	**07160-420X**	M20	40/45/50/60/70/80/90/100/110/120	52	30	20	17

Socket head screws

DIN 912 / DIN EN ISO 4762, steel or stainless steel

Order No.	Grade	Surface	D	L	B	DK	K	SW
07160-304X	10.9	-	M4	10/12/16/18/20/25	20	7	4	3
07160-305X	10.9	-	M5	10/12/16/18/20/25/30/40	22	8,5	5	4
07160-306X	10.9	-	M6	10/12/16/18/20/25/30/35/40/45/50/55/60	24	10	6	5
07160-308X	10.9	-	M8	16/18/20/25/30/35/40/45/50/60/70/80	28	13	8	6
07160-310X	10.9	-	M10	16/18/20/25/30/35/40/45/50/60/70/80/90/100	32	16	10	8
07160-312X	10.9	-	M12	20/25/30/35/40/45/50/60/70/80/90/100/110/120	36	18	12	10
07160-314X	10.9	-	M14	50/80/120	40	21	14	12
07160-316X	10.9	-	M16	30/35/40/45/50/60/70/80/90/100/110/120	44	24	16	14
07160-320X	10.9	-	M20	40/45/50/60/70/80/90/100/110/120	52	30	20	17
07160-504X	10.9	galvanised	M4	10/12/16/18/20/25	20	7	4	3
07160-505X	10.9	galvanised	M5	10/12/16/18/20/25/30/40	22	8,5	5	4
07160-506X	10.9	galvanised	M6	10/12/16/18/20/25/30/35/40/45/50/55/60	24	10	6	5
07160-508X	10.9	galvanised	M8	16/20/25/30/35/40/45/50/60/70/80	28	13	8	6
07160-510X	10.9	galvanised	M10	16/18/20/25/30/35/40/45/50/60/70/80/90/100	32	16	10	8
07160-512X	10.9	galvanised	M12	20/25/30/35/40/45/50/60/70/80/90/100/110/120	36	18	12	10
07160-514X	10.9	galvanised	M14	50/80/120	40	21	14	12
07160-516X	10.9	galvanised	M16	30/35/40/45/50/60/70/80/90/100/110/120	44	24	16	14
07160-520X	10.9	galvanised	M20	40/45/50/60/70/80/90/100/110/120	52	30	20	17

Order No.	Main material	D	L	B	DK	K	SW
07160-104X	stainless steel	M4	10/12/16/18/20/25	20	7	4	3
07160-105X	stainless steel	M5	10/12/16/18/20/25/30/40	22	8,5	5	4
07160-106X	stainless steel	M6	10/12/16/18/20/25/30/35/40/45/50/55/60	24	10	6	5
07160-108X	stainless steel	M8	16/18/20/25/30/35/40/45/50/60/70/80	28	13	8	6
07160-110X	stainless steel	M10	16/18/20/25/30/35/40/45/50/60/70/80/90/100	32	16	10	8
07160-112X	stainless steel	M12	20/25/30/35/40/45/50/60/70/80/90/100/110/120	36	18	12	10

Socket head screws

DIN 912/DIN EN ISO 4762

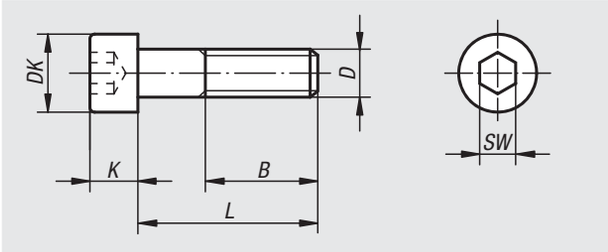

Material:
Steel.

Version:
Steel grade 12.9, black.

Sample order:
nlm 07160-206X40 (include length L)

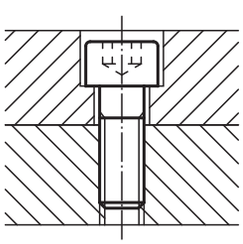

Order No.	Grade	D	L	B	DK	K	SW
07160-206X	12.9	M6	18/20/25/30/35/40/45/50/55/60/65/70/80/90/100	24	10	6	5
07160-208X	12.9	M8	20/25/30/35/40/45/50/55/60/65/70/80/90/100/120	28	13	8	6
07160-210X	12.9	M10	30/35/40/45/50/55/60/65/70/75/80/90/100/110/120/130/140	32	16	10	8
07160-212X	12.9	M12	30/35/40/45/50/55/60/65/70/75/80/90/100/110/120/130/140	36	18	12	10
07160-216X	12.9	M16	35/40/45/50/55/60/65/70/75/80/90/100/110/120/130/140/150/160/170/180/200	44	24	16	14
07160-218X	12.9	M18	35/40/45/50/55/60/65/70/75/80/90/100/110/120/130/140/150/160/170/180/200	48	27	18	14
07160-220X	12.9	M20	40/45/50/55/60/65/70/75/80/90/100/110/120/130/140/150/160/170/180/200	52	30	20	17

Socket head screws

DIN 912 / EN ISO 4762, LONG-LOK secured

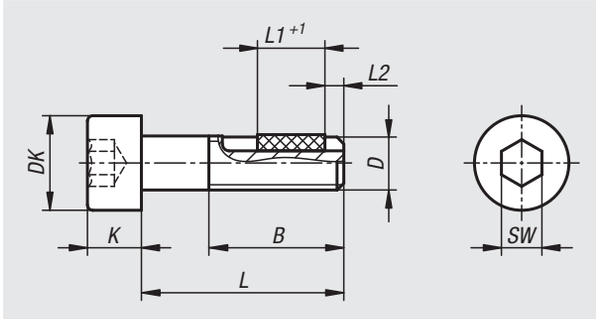

Material:
Steel or stainless steel (A 2).

LONG-LOK thread lock nylon.

Version:
Steel grade 8.8, black.
Stainless steel A 2-70, bright.

Sample order:
nlm 07160-306X20 (include length L)

Drawing reference:
L2 = approx. 2x thread pitch

Order No. steel	Order No. stainless steel	D	L	B	DK	K	L1	SW	Tightening torque approx. Nm	Loosening torque approx. Nm
07160-804X	**07160-904X**	M4	10/12/16/20/25	-	7	4	5/5/6/7/7	3	0,15	0,22
07160-805X	**07160-905X**	M5	10/12/16/20/25/30/40	-/22	8,5	5	5/6/7/7/8/8/8	4	0,25	0,1
07160-806X	**07160-906X**	M6	10/12/16/20/25/30/35/40/45/50	-/24	10	6	5/6/7/7/8/8/8/8/8/8	5	0,45	0,25
07160-808X	**07160-908X**	M8	16/20/25/30/35/40/45	-/28	13	8	7/8/8/8/10/10/10	6	0,8	0,4
07160-810X	**07160-910X**	M10	25/30/40/50	-/32	16	10	10/10/12/12	8	1,7	0,9
07160-812X	**07160-912X**	M12	30/40/50	-	18	12	10/12/12	10	1,8	0,9

Socket head screws

low head DIN 6912

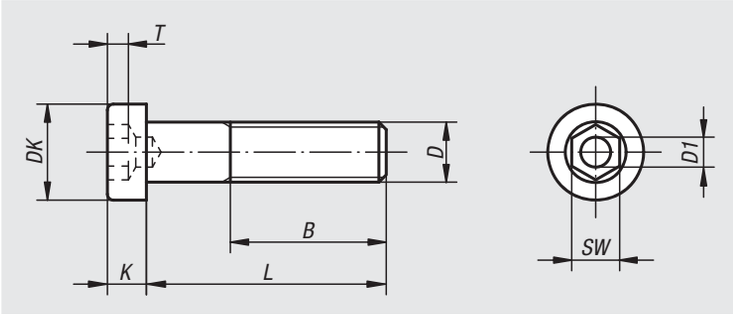

Material:
Steel or stainless steel (A 2)

Version:
Steel grade 8.8, black or galvanised.
Steel grade 10.9, black.
Stainless steel A 2-70, bright.

Sample order:
nlm 07161-110X20 (include length L)

Socket head screws with low head DIN 6912, stainless steel

Order No.	Main material	D	DK	K	D1	SW	T
07161-104X	stainless steel	M4	7	2,8	2	3	1,48
07161-105X	stainless steel	M5	8,5	3,5	2,5	4	1,88
07161-106X	stainless steel	M6	10	4	3	5	2,38
07161-108X	stainless steel	M8	13	5	4	6	2,88
07161-110X	stainless steel	M10	16	6,5	5	8	3,35
07161-112X	stainless steel	M12	18	7,5	6	10	3,85

Order No.	Main material	D	L	B
07161-104X	stainless steel	M4	10/12/16/20/25	6,5/8,5/12,5/14/14
07161-105X	stainless steel	M5	10/12/16/20/25/30	5,8/7,8/11,8/15,8/16/16
07161-106X	stainless steel	M6	10/12/16/20/25/30/35/40/45/50/60	4,5/6,5/10,5/14,5/19,5/18/18/18/18/18/18
07161-108X	stainless steel	M8	10/12/16/20/25/30/35/40/45/50/60/70	6/5/9/22/22/22/22/22/22/22/22/22
07161-110X	stainless steel	M10	16/20/25/30/35/40/45/50/60/70	8/12/17/22/27/26/26/26/26/26
07161-112X	stainless steel	M12	20/25/30/35/40/45/50/60/70	10,5/15,5/30/25,5/30,5/30/30/30/30

Socket head screws

low head DIN 6912

Socket head screws with low head DIN 6912, steel

Order No. Grade 8.8	Order No. Grade 8.8 galvanised	Order No. Grade 10.9	D	DK	K	D1	SW	T
07161-04X	**07161-404X**	**-**	M4	7	2,8	2	3	1,48
07161-05X	**07161-405X**	**-**	M5	8,5	3,5	2,5	4	1,88
07161-06X	**07161-406X**	**07161-306X**	M6	10	4	3	5	2,38
07161-08X	**07161-408X**	**07161-308X**	M8	13	5	4	6	2,88
07161-10X	**07161-410X**	**07161-310X**	M10	16	6,5	5	8	3,35
07161-12X	**07161-412X**	**07161-312X**	M12	18	7,5	6	10	3,85
07161-16X	**07161-416X**	**07161-316X**	M16	24	10	8	14	5,35
07161-20X	**07161-420X**	**07161-320X**	M20	30	12	10	17	6,32

Order No.	Main material	Surface	Grade	D	L	B
07161-04X	steel	-	8.8	M4	10/12/16/20/25	6,5/8,5/12,5/14/14
07161-05X	steel	-	8.8	M5	10/12/16/20/25/30	5,8/7,8/11,8/15,8/16/16
07161-06X	steel	-	8.8	M6	10/12/16/20/25/30/35/40/45/50/60	4,5/6,5/10,5/14,5/19,5/18/18/18/18/18/18
07161-08X	steel	-	8.8	M8	10/12/16/20/25/30/35/40/45/50/60/70/80	4/5/9/13/22/22/22/22/22/22/22/22/22
07161-10X	steel	-	8.8	M10	20/25/30/35/40/45/50/60/70/80/90/100	12/17/22/27/26/26/26/26/26/26/26/26
07161-12X	steel	-	8.8	M12	20/25/30/35/40/45/50/60/70/80/90/100/110/120	10,5/15,5/20,5/25,5/30,5/30/30/30/30/30/30/30/30/30
07161-16X	steel	-	8.8	M16	30/35/40/45/50/60/70/80/90/100/110/120	19/24/38/38/38/38/38/38/38/38/38
07161-20X	steel	-	8.8	M20	40/45/50/60/70/80/90/100/110/120	26/26/36/46/46/46/46/46/46/46
07161-404X	steel	galvanised	8.8	M4	10/12/16/20/25	6,5/8,5/12,5/14/14
07161-405X	steel	galvanised	8.8	M5	10/12/16/20/25/30	5,8/7,8/11,8/15,8/16/16
07161-406X	steel	galvanised	8.8	M6	10/12/16/20/25/30/35/40/45/50/60	4,5/6,5/10,5/14,5/19,5/18/18/18/18/18/18
07161-408X	steel	galvanised	8.8	M8	10/12/16/20/25/30/35/40/45/50/60/70/80	4/5/9/13/22/22/22/22/22/22/22/22/22
07161-410X	steel	galvanised	8.8	M10	20/25/30/35/40/45/50/60/70/80/90/100	12/17/22/27/26/26/26/26/26/26/26/26
07161-412X	steel	galvanised	8.8	M12	20/25/30/35/40/45/50/60/70/80/90/100/110/120	10,5/15,5/20,5/25,5/30,5/30/30/30/30/30/30/30/30/30
07161-416X	steel	galvanised	8.8	M16	30/35/40/45/50/60/70/80/90/100/110/120	19/24/38/38/38/38/38/38/38/38/38
07161-420X	steel	galvanised	8.8	M20	40/45/50/60/70/80/90/100/110/120	26/26/36/46/46/46/46/46/46/46
07161-306X	steel	-	10.9	M6	10/12/16/20/25/30/35/40	4,5/6,5/10,5/14,5/19,5/18/18/18
07161-308X	steel	-	10.9	M8	16/20/25/30/35/40/45/50/60	9/13/22/22/22/22/22/22/22
07161-310X	steel	-	10.9	M10	20/25/30/35/40/45/50/60	12/17/22/27/26/26/26/26
07161-312X	steel	-	10.9	M12	25/30/35/40/45/50/60	15,5/20,5/25,5/30,5/30/30/30
07161-316X	steel	-	10.9	M16	30/35/40/45/50/60/70/80	19/24/38/38/38/38/38/38
07161-320X	steel	-	10.9	M20	40/50/60/70	26/36/46/46

Grub screws with flat point

hexagon socket DIN 913

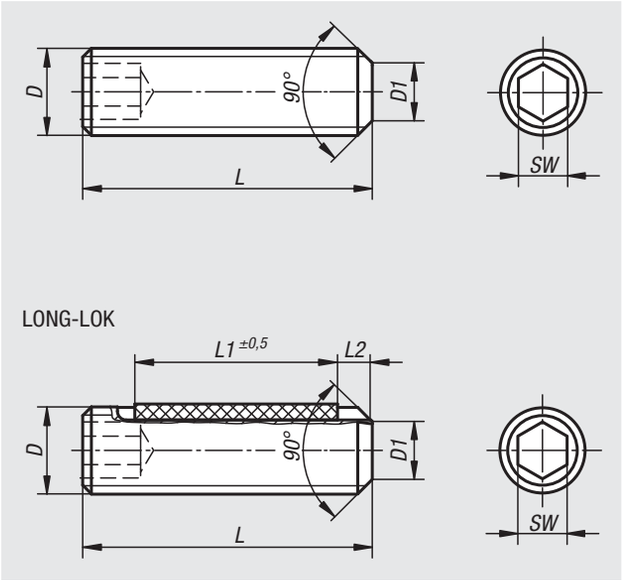

Material:
Steel or stainless steel (A 2).

LONG-LOK thread lock nylon.

Version:
Steel class 45 H, black.
Stainless steel A 2-70, bright.

Sample order:
nlm 07165-110X20 (include length L)

Drawing reference:
L2 = approx. 2x thread pitch

Order No.	Main material	D	L	D1	SW
07165-03X	steel	M3	5/6/8/10/12/16/20	2	1,5
07165-04X	steel	M4	5/6/8/10/12/16/20/25	2,5	2
07165-05X	steel	M5	5/6/8/10/12/16/20/25/30	3,5	2,5
07165-06X	steel	M6	6/8/10/12/16/20/25/30/35/40/45/50/60	4	3
07165-08X	steel	M8	8/10/12/16/20/25/30/35/40/45/50/60/70/80	5,5	4
07165-10X	steel	M10	10/12/16/20/25/30/35/40/45/50/60/70/80/90/100	7	5
07165-103X	stainless steel	M3	5/6/8/10/12	2	1,5
07165-104X	stainless steel	M4	5/6/8/10/12/16/20	2,5	2
07165-105X	stainless steel	M5	5/6/8/10/12/16/20/25/30	3,5	2,5
07165-106X	stainless steel	M6	6/8/10/12/16/20/25/30/35/40	4	3
07165-108X	stainless steel	M8	8/10/12/16/20/25/30/35/40/45/50	5,5	4
07165-110X	stainless steel	M10	10/12/16/20/25/30/35/40/45/50	7	5

Order No.	Version	Main material	D	L	L1	D1	SW
07165-203X	Long-Lok	steel	M3	5/6/8/10/12	2/3/4/4/4	2	1,5
07165-204X	Long-Lok	steel	M4	5/6/8/10/12/16	2/2,5/3,5/5/5/5	2,5	2
07165-205X	Long-Lok	steel	M5	5/6/8/10/12/16	2/3/3,5/3,5/5/6	3,5	2,5
07165-206X	Long-Lok	steel	M6	6/8/10/12/16/20	2,5/3/3,5/5/7/7	4	3
07165-208X	Long-Lok	steel	M8	8/10/12/16/20	3/3,5/5/8/8	5,5	4
07165-210X	Long-Lok	steel	M10	10/12/16/20	5/5/9/9	7	5
07165-303X	Long-Lok	stainless steel	M3	5/6/8/10/12	2/3/4/4/4	2	1,5
07165-304X	Long-Lok	stainless steel	M4	5/6/8/10/12/16	2/2,5/3,5/5/5/5	2,5	2
07165-305X	Long-Lok	stainless steel	M5	5/6/8/10/12/16	2/3/3,5/3,5/5/6	3,5	2,5
07165-306X	Long-Lok	stainless steel	M6	6/8/10/12/16/20	2,5/3/3,5/5/7/7	4	3
07165-308X	Long-Lok	stainless steel	M8	8/10/12/16/20	3/3,5/5/8/8	5,5	4
07165-310X	Long-Lok	stainless steel	M10	10/12/16/20	5/5/9/9	7	5

Grub screw with hexagon socket and pointed end

DIN 914 / DIN EN ISO 4027

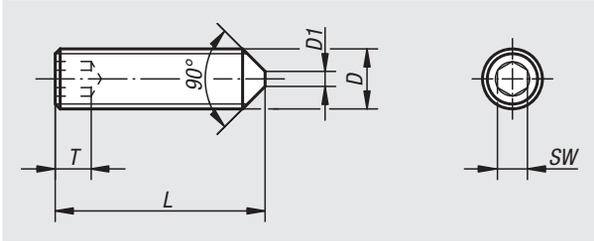

Material:
Steel or stainless steel (A 2)

Version:
Steel class 45 H, black.
Stainless steel A 2-70, bright.

Sample order:
nlm 07166-110X12 (include length L)

Note:
By M4x5, M5x5, M5x6, M6x6, M8x8, M10x10 the point angle is 120°.

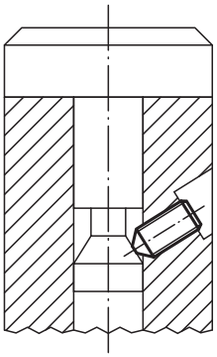

Order No. steel	Order No. stainless steel	D	L	D1	T	SW
07166-03X	**07166-103X**	M3	5/6/8/10/12/16/20	-	1,2	1,5
07166-04X	**07166-104X**	M4	5/6/8/10/12/16/20/25	-	1,5	2
07166-05X	**07166-105X**	M5	5/6/8/10/12/14/16/20/25/30	-	2	2,5
07166-06X	**07166-106X**	M6	6/8/10/12/16/20/25/30/35/40/45/50/60	1,5	2	3
07166-08X	**07166-108X**	M8	8/10/12/14/16/20/25/30/35/40/45/50/60	2	3	4
07166-10X	**07166-110X**	M10	10/12/16/20/25/30/35/40/45/50/60/70/80	2,5	4	5

Hexagon head bolts

DIN 931/DIN EN ISO 4014/DIN EN 24014

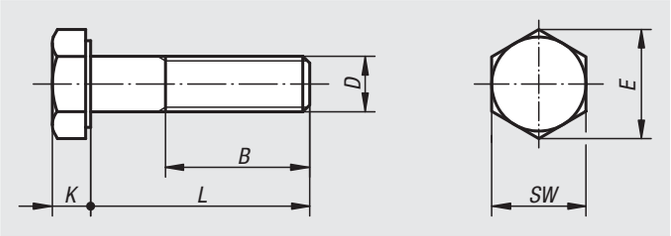

Material:
Steel or stainless steel (A 2)

Version:
Steel grade 8.8, black or galvanised.
Steel grade 10.9, black or galvanised.
Steel grade 12.9, black.
Stainless steel A 2-70, bright.

Sample order:
nlm 07170-110X50 (include length L)

On request:
DIN ISO 272 spanner sizes.

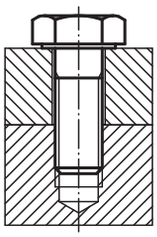

Order No. steel Grade 8.8	Order No. steel Grade 10.9	Surface	D	L	B	SW	E	K
07170-04X	-	-	M4	25/30/35/40/45/50	14	7	7,66	2,8
07170-05X	-	-	M5	25/30/35/40/45/50/60	16	8	8,79	3,5
07170-06X	**07170-306X**	-	M6	30/35/40/45/50/60/70	18	10	11,05	4
07170-08X	**07170-308X**	-	M8	35/40/45/50/60/70/80	22	13	14,38	5,3
07170-10X	**07170-310X**	-	M10	40/45/50/60/70/80/90/100	26	17	18,9	6,4
07170-12X	**07170-312X**	-	M12	45/50/60/70/80/90/100/110/120	30	19	21,1	7,5
07170-16X	**07170-316X**	-	M16	60/70/80/90/100/110/120	38	24	26,75	10
07170-20X	**07170-320X**	-	M20	70/80/90/100/110/120	46	30	33,53	12,5
07170-404X	-	galvanised	M4	25/30/35/40/45/50	14	7	7,66	2,8
07170-405X	-	galvanised	M5	25/30/35/40/45/50/60	16	8	8,79	3,5
07170-406X	**07170-506X**	galvanised	M6	30/35/40/45/50/60/70	18	10	11,05	4
07170-408X	**07170-508X**	galvanised	M8	35/40/45/50/60/70/80	22	13	14,38	5,3
07170-410X	**07170-510X**	galvanised	M10	40/45/50/60/70/80/90/100	26	17	18,9	6,4
07170-412X	**07170-512X**	galvanised	M12	45/50/60/70/80/90/100/110/120	30	19	21,1	7,5
07170-416X	**07170-516X**	galvanised	M16	60/70/80/90/100/110/120	38	24	26,75	10
07170-420X	**07170-520X**	galvanised	M20	70/80/90/100/110/120	46	30	33,53	12,5

Hexagon head bolts

DIN 931/DIN EN ISO 4014/DIN EN 24014

Order No.	Main material	Grade	D	L	B	SW	E	K
07170-210X	steel	12.9	M10	40/45/50/60/70/80/90/100	26	17	18,9	6,4
07170-212X	steel	12.9	M12	45/50/60/70/80/90/100/120	30	19	21,1	7,5
07170-216X	steel	12.9	M16	60/70/80/90/100/120	38	24	26,75	10
07170-220X	steel	12.9	M20	70/80/90/100/120	46	30	33,53	12,5

Order No.	Main material	D	L	B	SW	E	K
07170-105X	stainless steel	M5	25/30/35/40/45/50/60	16	8	8,79	3,5
07170-106X	stainless steel	M6	30/35/40/45/50/60/70	18	10	11,05	4
07170-108X	stainless steel	M8	35/40/45/50/60/70/80	22	13	14,38	5,3
07170-110X	stainless steel	M10	40/45/50/60/70/80/90/100	26	17	18,9	6,4
07170-112X	stainless steel	M12	45/50/60/70/80/90/100/110/120	30	19	21,1	7,5
07170-116X	stainless steel	M16	60/70/80/90/100/110/120	38	24	26,75	10

Hexagon head bolts

DIN 933

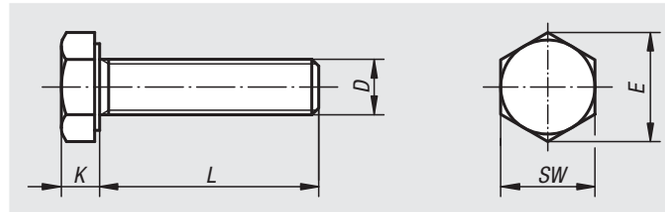

Material:
Steel or stainless steel (A 2)

Version:
Steel grade 8.8, black or galvanised.
Steel grade 10.9, black or galvanised.
Steel grade 12.9, black.
Stainless steel A 2-70, bright.

Sample order:
nlm 07171-04X10 (include length L)

Order No. steel Grade 8.8	Order No. steel Grade 10.9	Surface	D	L	K	SW	E
07171-04X	**-**	-	M4	10/12/16/18/20/25	2,8	7	7,66
07171-05X	**-**	-	M5	10/12/16/18/20/25/30/35/40	3,5	8	8,79
07171-06X	**07171-306X**	-	M6	10/12/16/18/20/25/30/35/40/45/50/55/60	4	10	11,05
07171-08X	**07171-308X**	-	M8	16/18/20/25/30/35/40/45/50/60/70/80/90/100	5,3	13	14,38
07171-10X	**07171-310X**	-	M10	16/18/20/25/30/35/40/45/50/60/70/80/90/100	6,4	17	18,9
07171-12X	**07171-312X**	-	M12	20/25/30/35/40/45/50/60/70/80/90/100/110/120	7,5	19	21,1
07171-14X	**-**	-	M14	30/35/40/45/50/60/70/80/90/100/110/120	8,8	22	24,49
07171-16X	**07171-316X**	-	M16	30/35/40/45/50/60/70/80/90/100/110/120	10	24	26,75
07171-20X	**07171-320X**	-	M20	40/45/50/60/70/80/90/100/110/120	12,5	30	33,53
07171-404X	**-**	galvanised	M4	10/12/16/18/20/25	2,8	7	7,66
07171-405X	**-**	galvanised	M5	10/12/16/18/20/25/30/35/40	3,5	8	8,79
07171-406X	**07171-506X**	galvanised	M6	10/12/16/18/20/25/30/35/40/45/50/55/60	4	10	11,05
07171-408X	**07171-508X**	galvanised	M8	16/18/20/25/30/35/40/45/50/60/70/80/90/100	5,3	13	14,38
07171-410X	**07171-510X**	galvanised	M10	16/18/20/25/30/35/40/45/50/60/70/80/90/100	6,4	17	18,9
07171-412X	**07171-512X**	galvanised	M12	20/25/30/35/40/45/50/60/70/80/90/100/110/120	7,5	19	21,1
07171-414X	**-**	galvanised	M14	30/35/40/45/50/60/70/80/90/100/110/120	8,8	22	24,49
07171-416X	**07171-516X**	galvanised	M16	30/35/40/45/50/60/70/80/90/100/110/120	10	24	26,75
07171-420X	**07171-520X**	galvanised	M20	40/45/50/60/70/80/90/100/110/120	12,5	30	33,53

Hexagon head bolts

DIN 933

Order No.	Main material	Grade	D	L	SW	E	K
07171-206X	steel	12.9	M6	12/16/20/25/30	10	11,05	4
07171-208X	steel	12.9	M8	16/20/25/30/35/40/45/50/60	13	14,38	5,3
07171-210X	steel	12.9	M10	20/25/30/35/40/45/50/60	17	18,9	6,4
07171-212X	steel	12.9	M12	25/30/35/40/45/50/60	19	21,1	7,5
07171-216X	steel	12.9	M16	30/35/40/45/50/60/70/80/90/100	24	26,75	10
07171-220X	steel	12.9	M20	40/45/50/60/70/80/90/100	30	33,53	12,5

Order No.	Main material	D	L	SW	E	K
07171-104X	stainless steel	M4	10/12/16/18/20/25	7	7,66	2,8
07171-105X	stainless steel	M5	10/12/16/18/20/25/30/35/40	8	8,79	3,5
07171-106X	stainless steel	M6	10/12/16/18/20/25/30/35/40/45/50/55/60	10	11,05	4
07171-108X	stainless steel	M8	16/18/20/25/30/35/40/45/50/60/70/80/90/100	13	14,38	5,3
07171-110X	stainless steel	M10	16/18/20/25/30/35/40/45/50/60/70/80/90/100	17	18,9	6,4
07171-112X	stainless steel	M12	20/25/30/35/40/45/50/60/70/80/90/100/110/120	19	21,1	7,5
07171-116X	stainless steel	M16	30/35/40/45/50/60/70/80/90/100/110/120	24	26,75	10
07171-120X	stainless steel	M20	40/45/50/60/70/80/90/100/110/120	30	33,53	12,5

Hexagon head bolts with flange

EN 1665

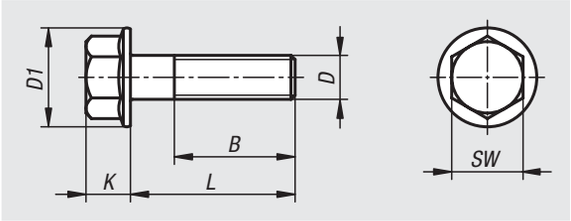

Material:
Steel or stainless steel (A 2)

Version:
Steel grade 8.8, galvanized.
Steel grade 10.9, galvanized.
Bright stainless steel.

Sample order:
nlm 07172-06X12 (include length L)

Order No.	Main material	Grade	D	L	B	D1	SW	K
07172-406X	steel	8.8	M6	12/16/20/25/30	18	14,2	10	6,6
07172-408X	steel	8.8	M8	12/16/20/25/30/35/40/50/60	22	18	13	8,1
07172-410X	steel	8.8	M10	20/25/30/35/40/50	26	22,3	15	9,2
07172-412X	steel	8.8	M12	20/25/30/40/50	30	26,6	16	11,5
07172-416X	steel	8.8	M16	30/35/40/45/50/70	38	35	21	14,4
07172-506X	steel	10.9	M6	12/16/20/25/30	18	14,2	10	6,6
07172-508X	steel	10.9	M8	12/16/20/25/30/35/40	22	18	13	8,1
07172-510X	steel	10.9	M10	25/30/40	26	22,3	15	9,2
07172-512X	steel	10.9	M12	20/35/40/45/50	30	26,6	16	11,5
07172-516X	steel	10.9	M16	30/35/40/45/50/60	38	35	21	14,4
07172-106X	stainless steel	-	M6	12/16/20/25/30	18	14,2	10	6,6
07172-108X	stainless steel	-	M8	16/20/25/30/35/40/50	22	18	13	8,1
07172-110X	stainless steel	-	M10	20/25/30/35/40/50/60	26	22,3	15	9,2

Hexagon head bolts

with serrated flange

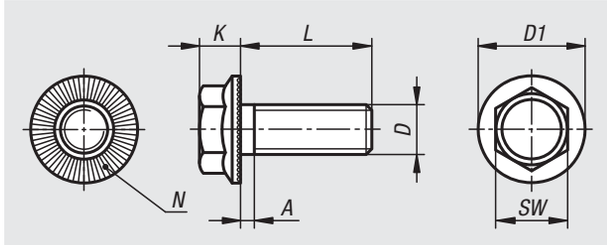

Material:
Steel.

Version:
Bright or galvanised.
Surface hardened min. 550 HV.

Sample order:
nlm 07173-305X10 (include length L)

Note:
The serrations bite into the contact face resulting in a positive locking connection that prevents self-loosening. Can be re-used several times.

Grade 100 corresponds to ca. grade 10.9.

Order No.	Surface	Grade	D	L	A max.	D1	K	SW	N (number)
07173-305X	-	100	M5	10/12/16/20	1,6	11,2	4,3	8	28
07173-306X	-	100	M6	10/12/16/20/25	2	14,2	5,5	10	36
07173-308X	-	100	M8	12/16/20/25/30/35/40	2,5	18,2	7	13	48
07173-310X	-	100	M10	16/20/25/30/35/40/45/50	3	21	8,5	15	48
07173-312X	-	100	M12	20/25/30/35/40/45/50/55/60/75	3,5	24	10	17	60
07173-316X	-	100	M16	25/30/35/40/45/50/55/60/65/70	4	31	14	22	72
07173-505X	galvanized	100	M5	10/12/16/20	1,6	11,2	4,3	8	28
07173-506X	galvanized	100	M6	10/12/16/20/25	2	14,2	5,5	10	36
07173-508X	galvanized	100	M8	12/16/20/25/30/40	2,5	18,2	7	13	48
07173-510X	galvanized	100	M10	16/20/25/30/35/40/50	3	21	8,5	15	48
07173-512X	galvanized	100	M12	20/25/30/35/40/45/50/60/75	3,5	24	10	17	60
07173-516X	galvanized	100	M16	25/35/40/45/50/55/60/70	4	31	14	22	72

Button head screws

EN ISO 7380

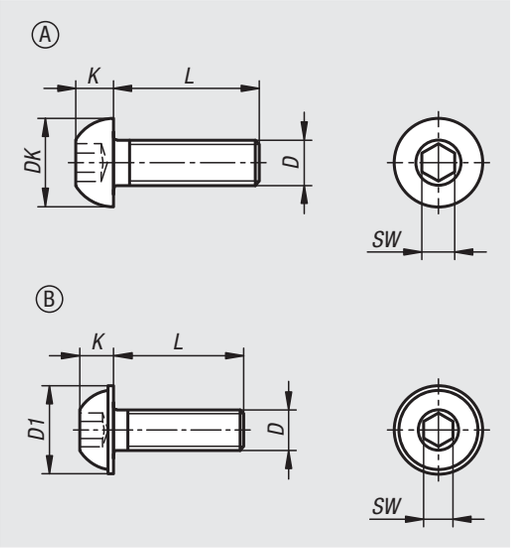

Material:
Steel or stainless steel (A 2)

Version:
Steel grade 10.9, bright or galvanised.
Stainless steel A 2-70, bright.

Sample order:
nlm 07174-1303X8 (include length L)

Note:
EN ISO 7380-1 Form A: Hexagon socket button head screws.
EN ISO 7380-2 Form B:Hexagon socket button head screws with collar.

Order No.	Form	Main material	Surface	Grade	D	L	DK	K	SW
07174-1303X	A	steel	-	10.9	M3	8/10/12/16/20	5,7	1,65	2
07174-1304X	A	steel	-	10.9	M4	8/10/12/16/20/25/30	7,6	2,2	2,5
07174-1305X	A	steel	-	10.9	M5	8/10/12/16/20/25/30/35/40	9,5	2,75	3
07174-1306X	A	steel	-	10.9	M6	8/10/12/16/20/25/30/35/40/45/50/55/60	10,5	3,3	4
07174-1308X	A	steel	-	10.9	M8	8/10/12/16/20/25/30/35/40/45/50/55/60	14	4,4	5
07174-1310X	A	steel	-	10.9	M10	12/16/20/25/30/35/40/45/50/55/60	17,5	5,5	6
07174-1503X	A	steel	galvanized	10.9	M3	8/10/12/16/20	5,7	1,65	2
07174-1504X	A	steel	galvanized	10.9	M4	8/10/12/16/20/25/30	7,6	2,2	2,5
07174-1505X	A	steel	galvanized	10.9	M5	8/10/12/16/20/25/30/35/40/45	9,5	2,75	3
07174-1506X	A	steel	galvanized	10.9	M6	8/10/12/16/20/25/30/35/40/45/50/55/60	10,5	3,3	4
07174-1508X	A	steel	galvanized	10.9	M8	8/10/12/16/20/25/30/35/40/45/50/55/60	14	4,4	5
07174-1510X	A	steel	galvanized	10.9	M10	12/16/20/25/30/35/40/45/50/55/60	17,5	5,5	6
07174-1512X	A	steel	galvanized	10.9	M12	16/20/25/30/35/40/45/50/60	21	6,6	8
07174-1516X	A	steel	galvanized	10.9	M16	30/40/45/50/60	28	8,8	10

Button head screws

EN ISO 7380

Order No.	Form	Main material	Surface	Grade	D	L	D1	K	SW
07174-2304X	B	steel	-	10.9	M4	8/10/12/16/20/25/30	9,4	2,2	2,5
07174-2305X	B	steel	-	10.9	M5	8/10/12/16/20/25/30/35	11,8	2,75	3
07174-2306X	B	steel	-	10.9	M6	8/10/12/16/20/25/30/35/40	13,6	3,3	4
07174-2308X	B	steel	-	10.9	M8	12/16/20/25/30/35/40/50/60	17,8	4,4	5
07174-2310X	B	steel	-	10.9	M10	25/30/35	21,9	5,5	6
07174-2504X	B	steel	galvanized	10.9	M4	8/10/12/16/20/25/30	9,4	2,2	2,5
07174-2505X	B	steel	galvanized	10.9	M5	8/10/12/16/20/25/30/35	11,8	2,75	3
07174-2506X	B	steel	galvanized	10.9	M6	8/10/12/16/20/25/30/35/40	13,6	3,3	4
07174-2508X	B	steel	galvanized	10.9	M8	12/16/20/25/30/35/40/50/60	17,8	4,4	5
07174-2510X	B	steel	galvanized	10.9	M10	20/30/35/40/50	21,9	5,5	6
07174-2512X	B	steel	galvanized	10.9	M12	20/25/30/40/50/60	26	6,6	8

Order No.	Form	Main material	Grade	D	L	DK	D1	K	SW
07174-1103X	A	stainless steel	70	M3	8/10/12/16/20	5,7	-	1,65	2
07174-1104X	A	stainless steel	70	M4	8/10/12/16/20/25/30	7,6	-	2,2	2,5
07174-1105X	A	stainless steel	70	M5	8/10/12/16/20/25/30/40/45	9,5	-	2,75	3
07174-1106X	A	stainless steel	70	M6	8/10/12/16/20/25/30/35/40/45/50/60	10,5	-	3,3	4
07174-1108X	A	stainless steel	70	M8	10/12/16/20/25/30/35/40/45/50/60	14	-	4,4	5
07174-1110X	A	stainless steel	70	M10	16/20/25/30/40/50	17,5	-	5,5	6
07174-2103X	B	stainless steel	70	M3	8/10	-	6,9	1,65	2
07174-2104X	B	stainless steel	70	M4	8/10/12/16/20/25	-	9,4	2,2	2,5
07174-2105X	B	stainless steel	70	M5	8/10/12/16/20/25	-	11,8	2,75	3
07174-2106X	B	stainless steel	70	M6	8/10/12/16/20/25/30/35/40/45	-	13,6	3,3	4
07174-2108X	B	stainless steel	70	M8	10/12/16/20/25	-	17,8	4,4	5

Screws with countersunk head

hexagon socket DIN EN ISO 10642

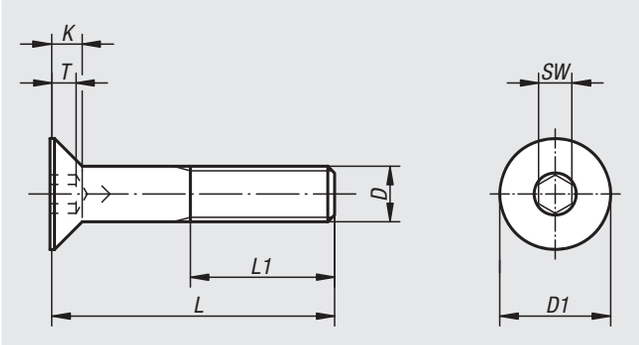

Material:
Steel or stainless steel (A 2)

Version:
Steel grade 8.8, black or galvanised.
Steel grade 10.9, black.
Stainless steel A 2-70, bright.

Sample order:
nlm 07175-106X20 (include length L)

Order No. steel Grade 8.8	Order No. steel Grade 10.9	Surface	D	L	L1 min.	K	T	D1	SW
07175-04X	**07175-304X**	-	M4	10/12/16/20/25	14	2,3	1,8	8	2,5
07175-05X	**07175-305X**	-	M5	10/12/16/20/25/30	16	2,8	2,3	10	3
07175-06X	**07175-306X**	-	M6	10/12/16/20/25/30/35/40/45/50/60	18	3,3	2,5	12	4
07175-08X	**07175-308X**	-	M8	16/20/25/30/35/40/45/50/60	22	4,4	3,5	16	5
07175-10X	**07175-310X**	-	M10	16/20/25/30/35/40/45/50/60/70	26	5,5	4,4	20	6
07175-12X	**07175-312X**	-	M12	20/25/30/35/40/45/50/60/70/80	30	6,5	4,6	24	8
07175-16X	**07175-316X**	-	M16	30/35/40/45/50/60/70/80	38	7,5	5,3	30	10
07175-404X	**-**	galvanised	M4	10/12/16/20/25	14	2,3	1,8	8	2,5
07175-405X	**-**	galvanised	M5	10/12/16/20/25/30	16	2,8	2,3	10	3
07175-406X	**-**	galvanised	M6	10/12/16/20/25/30/35/40/45/50/60	18	3,3	2,5	12	4
07175-408X	**-**	galvanised	M8	16/20/25/30/35/40/45/50/60	22	4,4	3,5	16	5
07175-410X	**-**	galvanised	M10	16/20/25/30/35/40/45/50/60/70	26	5,5	4,4	20	6
07175-412X	**-**	galvanised	M12	20/25/30/35/40/45/50/60/70/80	30	6,5	4,6	24	8
07175-416X	**-**	galvanised	M16	30/35/40/45/50/60/70/80	38	7,5	5,3	30	10

Order No.	Main material	D	L	L1 min.	K	T	D1	SW
07175-104X	stainless steel	M4	10/12/16/20/25	14	2,3	1,8	8	2,5
07175-105X	stainless steel	M5	10/12/16/20/25/30	16	2,8	2,3	10	3
07175-106X	stainless steel	M6	10/12/16/20/25/30/35/40/45/50/60	18	3,3	2,5	12	4
07175-108X	stainless steel	M8	16/20/25/30/35/40/45/50/60	22	4,4	3,5	16	5
07175-110X	stainless steel	M10	16/20/25/30/35/40/45/50/60/70	26	5,5	4,4	20	6
07175-112X	stainless steel	M12	20/25/30/35/40/45/50/60/70/80	30	6,5	4,6	24	8
07175-116X	stainless steel	M16	30/35/40/45/50/60/70/80	38	7,5	5,3	30	10

Eye bolts

DIN 444, Form B

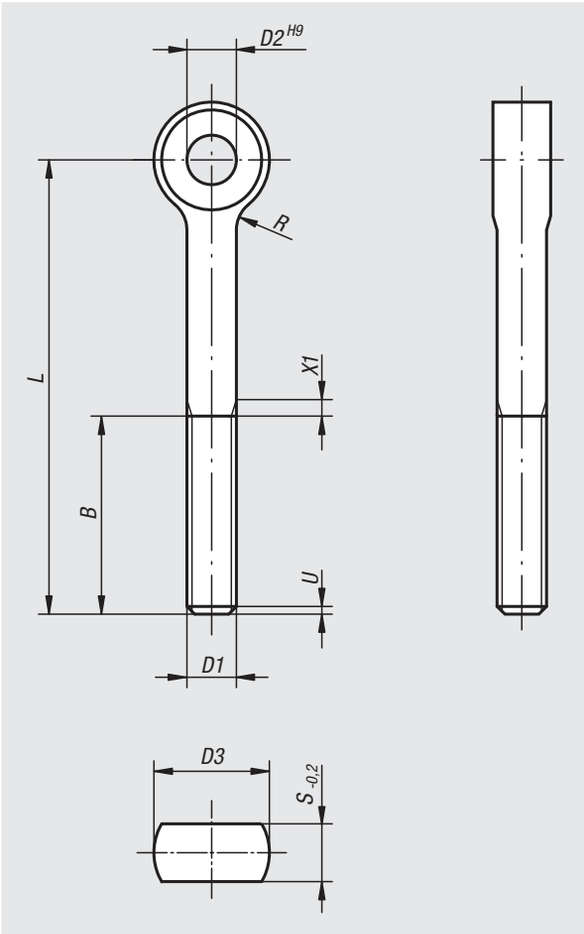

Material:
Steel, grade 8.8 or stainless steel.

Version:
Steel black oxidised.
Stainless steel bright.

Sample order:
nlm 07180-12100

Note:
Suitable hinge pin, see 04250.

Drawing reference:
U = max. 2 P (incomplete thread)
X1 = to DIN 76 part 1

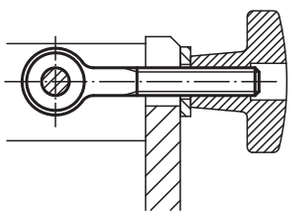

Order No. steel	Order No. stainless steel	D1	L	D2	D3	B	S	R
07180-0550	07180-10550	M5	50	5	12	16	6	2,5
07180-0575	-	M5	75	5	12	16	6	2,5
07180-0650	07180-10650	M6	50	6	14	18	7	4
07180-0675	07180-10675	M6	75	6	14	18	7	4
07180-0850	07180-10850	M8	50	8	18	22	9	4
07180-0875	07180-10875	M8	75	8	18	22	9	4
07180-1075	07180-11075	M10	75	10	20	26	12	4
07180-10100	07180-110100	M10	100	10	20	26	12	4
07180-1275	07180-11275	M12	75	12	25	30	14	6
07180-12100	07180-112100	M12	100	12	25	30	14	6
07180-12120	07180-112120	M12	120	12	25	30	14	6
07180-12130	07180-112130	M12	130	12	25	36	14	6
07180-1475	07180-11475	M14	75	14	28	36	16	6
07180-14130	07180-114130	M14	130	14	28	36	16	6
07180-16130	07180-116130	M16	130	16	32	44	17	6
07180-20140	07180-120140	M20	140	18	40	52	22	6

Wing screws

DIN 316

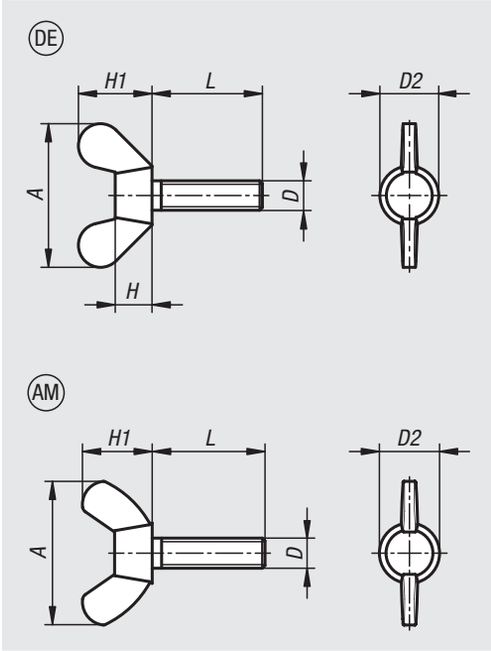

Material:
Steel (German type: malleable iron head, steel shaft) min. grade 4.6 or stainless steel (A 2).

Version:
Galvanised steel.
Bright stainless steel.

Sample order:
nlm 07199-104X8 (include length L)

Note:
The wing screws can be tightened and (generally) loosened by hand.

Drawing reference:
DE = German style
AM = American style

Order No.	Form	Main material	D	L	A max.	D2 max.	H max.	H1 max.
07199-104X	DE	steel	M4	8/10/12/16/20/25/30	20	7	3,9	9,5
07199-105X	DE	steel	M5	10/12/16/20/25/30/35/40/50	25	9,5	5,3	12
07199-106X	DE	steel	M6	10/12/16/20/25/30/35/40/50	31,5	11,5	6,5	16
07199-108X	DE	steel	M8	10/12/16/20/25/30/35/40/50/60	37	14,5	8,3	19
07199-110X	DE	steel	M10	16/20/25/30/35/40/50/60/70	49,5	18,5	10	24
07199-112X	DE	steel	M12	16/20/25/30/40/50/60/70/80	63,5	21,5	12	32,3

Order No.	Form	Main material	D	L	A max.	D2 max.	H1 max.
07199-204X	AM	steel	M4	10/12/15/20/25/30	22	9,5	10,5
07199-205X	AM	steel	M5	10/12/15/20/25/30/35/40	22	9,5	10,5
07199-206X	AM	steel	M6	10/12/15/20/25/30/35/40/50	26,8	11,9	12,9
07199-208X	AM	steel	M8	10/12/15/20/25/30/35/40/45/50/60	30,3	13,5	14,8
07199-210X	AM	steel	M10	15/20/25/30/35/40/50/60	35,3	15,3	17,3
07199-212X	AM	steel	M12	20/25/30/35/40/50/60	47,5	20,5	22,5
07199-1204X	AM	stainless steel	M4	10/12/16/20/25/30	22	9,5	10,5
07199-1205X	AM	stainless steel	M5	10/12/16/20/25/30/35/40	22	9,5	10,5
07199-1206X	AM	stainless steel	M6	10/12/16/20/25/30/35/40/45/50	26,8	11,9	12,9
07199-1208X	AM	stainless steel	M8	10/12/16/20/25/30/35/40/45/50/60	30,3	13,5	14,8
07199-1210X	AM	stainless steel	M10	16/20/25/30/35/40/45/50/60	35,3	15,3	17,3

Wing nuts

DIN 315

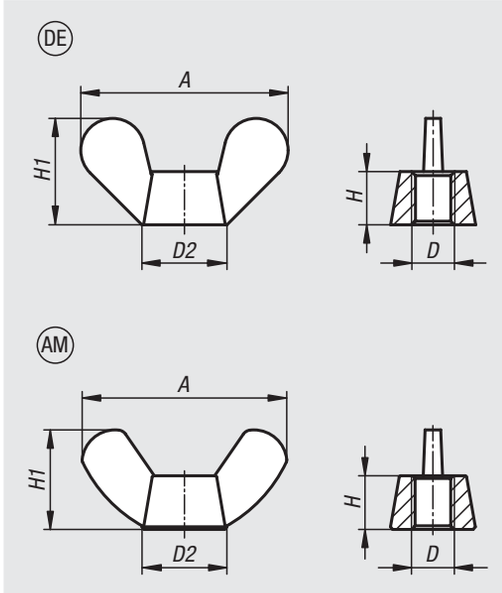

Material:
Steel (German type from M12 malleable iron) or stainless steel (A 2).

Version:
Steel and malleable iron galvanised.
Stainless steel bright.

Sample order:
nlm 07200-104

Note:
The wing nuts can be tightened and (generally) loosened tool-free.

Drawing reference:
DE = German style
AM = American style

Order No. steel	Order No. malleable iron	Order No. stainless steel	Form	D	A max.	D2 max.	H max.	H1 max.
07200-104	-	**07200-1104**	DE	M4	20	8	4,6	10,5
07200-105	-	**07200-1105**	DE	M5	26	11	6,5	13
07200-106	-	**07200-1106**	DE	M6	33	13	8	17
07200-108	-	**07200-1108**	DE	M8	39	16	10	20
07200-110	-	**07200-1110**	DE	M10	51	20	12	25
-	**07200-112**	**07200-1112**	DE	M12	65	23	14	33,5
-	**07200-116**	**07200-1116**	DE	M16	73	29	17	37,5
-	**07200-120**	**07200-1120**	DE	M20	90	35	21	46,5

Order No. steel	Order No. stainless steel	Form	D	A max.	D2 max.	H max.	H1 max.
07200-204	**07200-1204**	AM	M4	18,5	8	3	8,8
07200-205	**07200-1205**	AM	M5	22	11	4	10,5
07200-206	**07200-1206**	AM	M6	26,8	13	4,9	12,9
07200-208	**07200-1208**	AM	M8	30,3	14	5,4	14,8
07200-210	**07200-1210**	AM	M10	35,3	16,5	6,3	17,3
07200-212	**07200-1212**	AM	M12	47,5	22,5	7,9	22,5

Hexagon nuts

DIN 934/DIN EN ISO 4032/DIN EN 24032

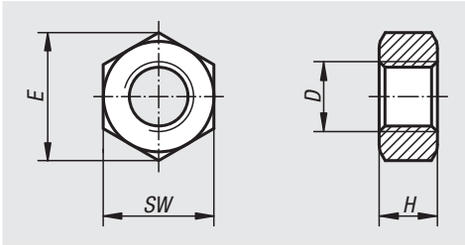

Material:
Steel or stainless steel (A 2)

Version:
Steel grade 8, bright or galvanised.
Steel grade 10, bright or galvanised.
Steel grade 12, bright.
Stainless steel A 2-70, bright.

Sample order:
nlm 07210-10

Note:
The nut grade must always be the same or higher than the bolt grade, i.e. bolts with grade 8.8 are always paired with nuts grade 8 or higher, but never less.

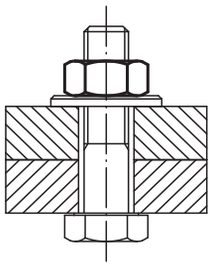

On request:
DIN ISO 272 spanner sizes.

Order No. steel Grade 8	Order No. steel Grade 10	Order No. steel Grade 12	Order No. stainless steel Grade 70	Surface	D	E	H	SW
07210-03	**07210-403**	-	**07210-103**	bright	M3	6,01	2,4	5,5
07210-04	**07210-404**	-	**07210-104**	bright	M4	7,66	3,2	7
07210-05	**07210-405**	-	**07210-105**	bright	M5	8,79	4	8
07210-06	**07210-406**	**07210-506**	**07210-106**	bright	M6	11,05	5	10
07210-08	**07210-408**	**07210-508**	**07210-108**	bright	M8	14,38	6,5	13
07210-10	**07210-410**	**07210-510**	**07210-110**	bright	M10	18,9	8	17
07210-12	**07210-412**	**07210-512**	**07210-112**	bright	M12	21,1	10	19
07210-14	**07210-414**	-	**07210-114**	bright	M14	23,9	11	22
07210-16	**07210-416**	**07210-516**	**07210-116**	bright	M16	26,76	13	24
07210-20	**07210-420**	**07210-520**	**07210-120**	bright	M20	32,95	16	30
07210-22	**07210-422**	-	**07210-122**	bright	M22	35	18	32
07210-24	**07210-424**	**07210-524**	**07210-124**	bright	M24	39,6	19	36
07210-27	**07210-427**	**07210-527**	**07210-127**	bright	M27	45,2	22	41
07210-30	**07210-430**	**07210-530**	**07210-130**	bright	M30	50,9	24	46
07210-33	**07210-433**	-	**07210-133**	bright	M33	55,4	26	50
07210-36	**07210-436**	**07210-536**	**07210-136**	bright	M36	60,8	29	55
07210-203	-	-	-	galvanised	M3	6,01	2,4	5,5
07210-204	**07210-304**	-	-	galvanised	M4	7,66	3,2	7
07210-205	**07210-305**	-	-	galvanised	M5	8,79	4	8
07210-206	**07210-306**	-	-	galvanised	M6	11,05	5	10
07210-208	**07210-308**	-	-	galvanised	M8	14,38	6,5	13
07210-210	**07210-310**	-	-	galvanised	M10	18,9	8	17
07210-212	**07210-312**	-	-	galvanised	M12	21,1	10	19
07210-214	**07210-314**	-	-	galvanised	M14	23,9	11	22
07210-216	**07210-316**	-	-	galvanised	M16	26,76	13	24
07210-220	**07210-320**	-	-	galvanised	M20	32,95	16	30
07210-222	**07210-322**	-	-	galvanised	M22	35	18	32
07210-224	**07210-324**	-	-	galvanised	M24	39,6	19	36
07210-227	**07210-327**	-	-	galvanised	M27	45,2	22	41
07210-230	**07210-330**	-	-	galvanised	M30	50,9	24	46
07210-233	**07210-333**	-	-	galvanised	M33	55,4	26	50
07210-236	**07210-336**	-	-	galvanised	M36	60,8	29	55

Hexagon nuts

thin type DIN 439

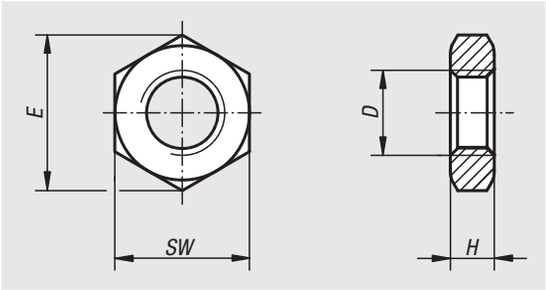

Material:
Steel or stainless steel (A 2)

Version:
Steel grade 04, galvanized or black oxidised.
Stainless steel A2, bright.

Sample order:
nlm 07212-10

Note:
These hexagon nuts are used in screw connections exposed to limited loads, e.g. as a locknut for clevis joints or rod ends.

Order No. steel galvanised	Order No. stainless steel bright	Order No. steel black oxidised	Version	D	E	H	SW
07212-05	**07212-105**	**07212-205**	RH thread	M5	8,79	2,7	8
07212-06	**07212-106**	**07212-206**	RH thread	M6	11,05	3,2	10
07212-006	**07212-1062**	**07212-2063**	RH thread	M6x0,75	11,05	3,2	10
07212-08	**07212-108**	**07212-208**	RH thread	M8	14,38	4	13
07212-008	**07212-1083**	**07212-2083**	RH thread	M8x1	14,38	4	13
07212-10	**07212-110**	**07212-210**	RH thread	M10	18,9	5	17
07212-103	**07212-1103**	**07212-2103**	RH thread	M10x1	18,9	5	17
07212-104	**07212-1104**	**-**	RH thread	M10x1,25	18,9	5	17
07212-12	**07212-112**	**07212-212**	RH thread	M12	21,1	6	19
07212-123	**07212-1123**	**-**	RH thread	M12x1,25	21,1	6	19
07212-124	**07212-1124**	**07212-2124**	RH thread	M12x1,5	21,1	6	19
07212-14	**07212-114**	**-**	RH thread	M14	24,49	7	22
07212-16	**07212-116**	**07212-216**	RH thread	M16	26,76	8	24
07212-163	**07212-1163**	**07212-2163**	RH thread	M16x1,5	26,76	8	24
07212-183	**-**	**-**	RH thread	M18x1,5	29,56	9	27
07212-20	**07212-120**	**-**	RH thread	M20	32,95	10	30
07212-203	**07212-1203**	**07212-2203**	RH thread	M20x1,5	32,95	10	30
07212-223	**07212-1223**	**-**	RH thread	M22x1,5	36,9	10	32
07212-24	**07212-1244**	**-**	RH thread	M24	39,55	12	36
-	**07212-1243**	**07212-2243**	RH thread	M24x2	39,6	12	36
07212-30	**-**	**-**	RH thread	M30	50,85	15	46
07212-061	**07212-1061**	**-**	LH thread	M6	11,05	3,2	10
07212-081	**07212-1081**	**-**	LH thread	M8	14,38	4	13
07212-101	**07212-1101**	**-**	LH thread	M10	18,9	5	17
07212-1031	**07212-11031**	**-**	LH thread	M10x1	18,9	5	17
07212-1041	**07212-11041**	**-**	LH thread	M10x1,25	18,9	5	17
07212-121	**07212-1121**	**-**	LH thread	M12	21,1	6	19
07212-1231	**07212-11231**	**-**	LH thread	M12x1,25	21,1	6	19
07212-1241	**07212-11241**	**-**	LH thread	M12x1,5	21,1	6	19
07212-161	**07212-1161**	**-**	LH thread	M16	26,76	8	24
07212-2031	**07212-12031**	**-**	LH thread	M20x1,5	32,95	10	30
07212-2231	**07212-12231**	**-**	LH thread	M22x1,5	36,9	10	32

Hexagon nuts with polyamide thread lock

high type, DIN 982

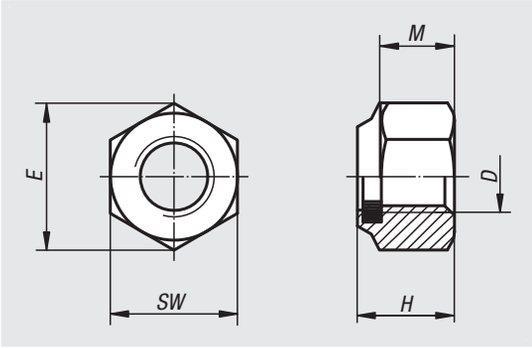

Material:
Steel or stainless steel (A 2)

Version:
Galvanised steel.
Bright stainless steel.

Sample order:
nlm 07213-204

Note:
When screwing the nuts onto the thread, the thread lock is plastically and elastically deformed. The elastic deformation causes a radial frictional lock against the nuts being loosened.

The plastic thread lock is only effective when the nuts are fully screwed onto the male thread. The screw length must be selected so that at least two full threads protrude from the nut.

Due to the plastic deformation of the thread lock, these nuts should only be used once.

Temperature range:
-50°C to +120°C.

Order No.	Main material	Grade	D	E	H	M	SW
07213-204	steel	6-8	M4	7,66	6	2,9	7
07213-205	steel	8	M5	8,79	6,3	4,4	8
07213-206	steel	8	M6	11,05	8	4,9	10
07213-208	steel	8	M8	14,38	9,5	6,44	13
07213-210	steel	8	M10	18,9	11,5	8,04	17
07213-212	steel	8	M12	21,1	14	10,37	19
07213-214	steel	8	M14	23,9	16	12,1	22
07213-216	steel	8	M16	26,76	18	14,1	24
07213-220	steel	8	M20	32,95	22	16,9	30
07213-224	steel	8	M24	39,55	28	20,2	36
07213-310	steel	10	M10	18,9	11,5	8,04	17
07213-312	steel	10	M12	21,1	14	10,37	19
07213-316	steel	10	M16	26,76	18	14,1	24
07213-320	steel	10	M20	32,95	22	16,9	30
07213-324	steel	10	M24	39,55	28	20,2	36
07213-105	stainless steel	-	M5	8,79	6,3	4,4	8
07213-106	stainless steel	-	M6	11,05	8	4,9	10
07213-108	stainless steel	-	M8	14,38	9,5	6,44	13
07213-110	stainless steel	-	M10	18,9	11,5	8,04	17
07213-112	stainless steel	-	M12	21,1	14	10,37	19
07213-116	stainless steel	-	M16	26,76	18	14,1	24
07213-120	stainless steel	-	M20	32,95	22	16,9	30

Hexagon nuts with polyamide thread lock

thin type, DIN 985

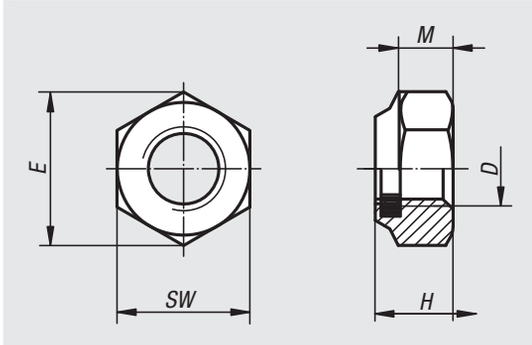

Material:
Steel or stainless steel (A 2)

Version:
Galvanised steel.
Bright stainless steel.

Sample order:
nlm 07214-203

Note:
When screwing the nuts onto the thread, the thread lock is plastically and elastically deformed. The elastic deformation causes a radial frictional lock against the nuts being loosened.

The plastic thread lock is only effective when the nuts are fully screwed onto the male thread. The screw length must be selected so that at least two full threads protrude from the nut.

Due to the plastic deformation of the thread lock, these nuts should only be used once.

Temperature range:
-50°C to +120°C.

Order No. steel Grade 6-8	Order No. steel Grade 8	Order No. steel Grade 10	D	E	H	M	SW
07214-203	-	-	M3	6,08	4	2,4	5,5
07214-204	-	-	M4	7,66	5	2,9	7
07214-205	-	-	M5	8,79	5	3,2	8
-	**07214-206**	**07214-306**	M6	11,05	6	4	10
-	**07214-208**	**07214-308**	M8	14,38	8	5,5	13
-	**07214-210**	**07214-310**	M10	18,9	10	6,5	17
-	**07214-212**	**07214-312**	M12	21,1	12	8	19
-	**07214-214**	**07214-314**	M14	23,9	14	9,5	22
-	**07214-216**	**07214-316**	M16	26,76	16	10,5	24
-	**07214-220**	**07214-320**	M20	32,95	20	14	30
-	**07214-224**	-	M24	39,55	24	15	36
-	**07214-227**	**07214-327**	M27	45,2	27	17	41
-	**07214-230**	**07214-330**	M30	50,85	30	19	46
-	-	**07214-324**	M24	35	24	15	36

Order No.	Main material	D	E	H	M	SW
07214-103	stainless steel	M3	6,08	4	2,4	5,5
07214-104	stainless steel	M4	7,66	5	2,9	7
07214-105	stainless steel	M5	8,79	5	3,2	8
07214-106	stainless steel	M6	11,05	6	4	10
07214-108	stainless steel	M8	14,38	8	5,5	13
07214-110	stainless steel	M10	18,9	10	6,5	17
07214-112	stainless steel	M12	21,1	12	8	19
07214-114	stainless steel	M14	23,9	14	9,5	22
07214-116	stainless steel	M16	26,76	16	10,5	24
07214-120	stainless steel	M20	32,95	20	14	30
07214-124	stainless steel	M24	39,55	24	15	36
07214-127	stainless steel	M27	45,2	27	17	41
07214-130	stainless steel	M30	50,85	30	19	46

Hexagon nuts with thread lock

DIN 980

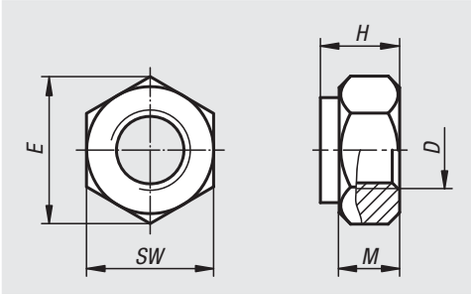

Material:
Steel or stainless steel (A 2)

Version:
Galvanised steel.
Bright stainless steel.

Sample order:
nlm 07215-204

Note:
Hexagon nuts with thread lock DIN 980, Form V
(all-metal nut, one piece).

Order No. steel Grade 8	Order No. steel Grade 10	D	E	H	M	SW
07215-204	-	M4	7,66	4,2	2,2	7
07215-205	-	M5	8,79	5,1	2,75	8
07215-206	-	M6	11,05	6	3,3	10
07215-208	**07215-308**	M8	14,38	8	4,4	13
07215-210	**07215-310**	M10	18,9	10	5,5	17
07215-212	**07215-312**	M12	21,1	12	6,6	19
07215-214	**07215-314**	M14	23,9	14	7,7	22
07215-216	**07215-316**	M16	26,76	16	8,8	24
07215-220	**07215-320**	M20	32,95	20	11	30
07215-224	**07215-324**	M24	39,55/35	24	13,2	36
07215-227	**07215-327**	M27	45,2	27	14,8	41
07215-230	**07215-330**	M30	50,85	30	16,5	46

Order No.	Main material	D	E	H	M	SW
07215-104	stainless steel	M4	7,66	4,2	2,2	7
07215-105	stainless steel	M5	8,79	5,1	2,75	8
07215-106	stainless steel	M6	11,05	6	3,3	10
07215-108	stainless steel	M8	14,38	8	4,4	13
07215-110	stainless steel	M10	18,9	10	5,5	17
07215-112	stainless steel	M12	21,1	12	6,6	19
07215-114	stainless steel	M14	23,9	14	7,7	22
07215-116	stainless steel	M16	26,76	16	8,8	24
07215-120	stainless steel	M20	32,95	20	11	30
07215-124	stainless steel	M24	39,55	24	13,2	36

Hexagon nut

with serrated flange

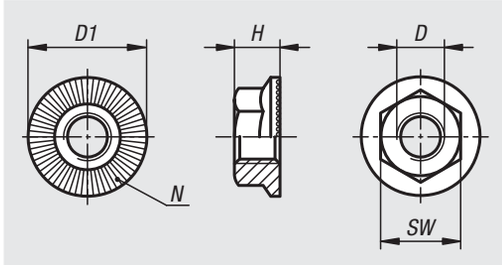

Material:
Steel.

Version:
Bright or galvanised.
Surface hardened min. 550 HV.

Sample order:
nlm 07216-405

Note:
The serrations bite into the contact face resulting in a positive locking connection that prevents self-loosening. Can be re-used several times.

Order No.	Surface	Grade	D	D1	H	SW	N (number)
07216-405	-	10	M5	11,2	4,3	8	28
07216-406	-	10	M6	14,2	5,5	10	36
07216-408	-	10	M8	18,2	7	13	48
07216-410	-	10	M10	21	8,5	15	48
07216-412	-	10	M12	24	10	17	60
07216-416	-	10	M16	31	14	22	72
07216-305	galvanised	10	M5	11,2	4,3	8	28
07216-306	galvanised	10	M6	14,2	5,5	10	36
07216-308	galvanised	10	M8	18,2	7	13	48
07216-310	galvanised	10	M10	21	8,5	15	48
07216-312	galvanised	10	M12	24	10	17	60
07216-316	galvanised	10	M16	31	14	22	72

Hexagon nuts with flange

EN 1661

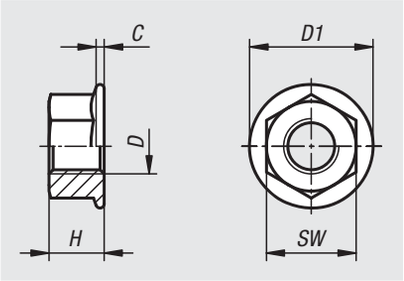

Material:
Steel or stainless steel (A 2)

Version:
Steel grade 8, galvanized.
Bright stainless steel.

Sample order:
nlm 07217-204

Order No. steel	Order No. stainless steel	D	D1	C	H	SW
07217-204	**07217-104**	M4	10	0,9	4,65	7
07217-205	**07217-105**	M5	11,8	1	5	8
07217-206	**07217-106**	M6	14,2	1,1	6	10
07217-208	**07217-108**	M8	17,9	1,2	8	13
07217-210	**07217-110**	M10	21,8	1,5	10	15
07217-212	**07217-112**	M12	26	1,8	12	18
07217-216	**-**	M16	34,5	2,4	16	24
07217-220	**-**	M20	42,8	3	20	30

Hexagon nuts with flange

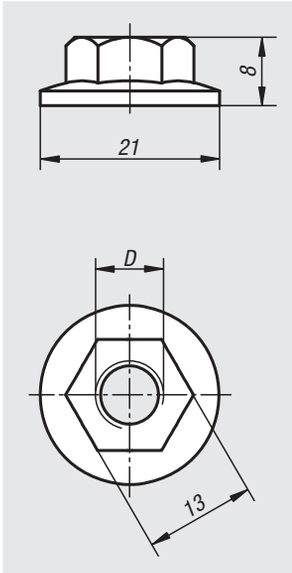

Material:
Steel.

Version:
galvanized.

Sample order:
nlm 07218-08

Note:
Nut with a large collar. Ideal together with a hammer-head screw.

Order No.	Type	Slot width	D
07218-08	B	10	M8

Extension nuts

height 3xD

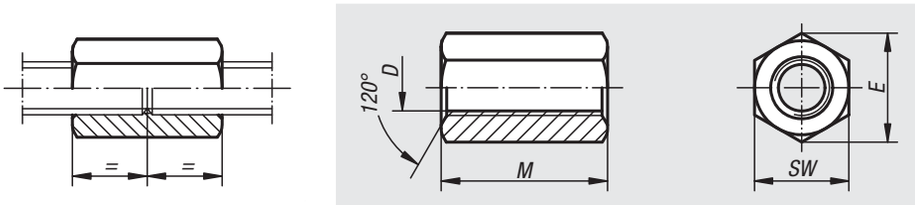

Material:
Carbon steel.

Version:
Tempered to grade 10.

Sample order:
nlm 07220-16

Note:
For functional and safety reasons screws should be screwed into a maximum of half the nut height from both sides. Minimum thread depth 1x diameter.

On request:
DIN ISO 272 spanner sizes.

Order No.	D	M = 3 x D	SW	E
07220-06	M6	18	10	11,5
07220-08	M8	24	13	15
07220-10	M10	30	17	19,6
07220-12	M12	36	19	21,9
07220-14	M14	42	22	25,4
07220-16	M16	48	24	27,7
07220-18	M18	54	27	31,2
07220-20	M20	60	30	34,6
07220-22	M22	66	32	36,9
07220-24	M24	72	36	41,6
07220-27	M27	81	41	47,3
07220-30	M30	90	46	53,1
07220-36	M36	108	55	63,5

Turnbuckle nuts

steel tube, closed form DIN 1478

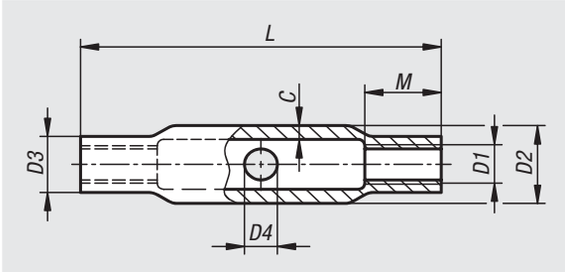

Material:
Steel.

Version:
galvanized.

Sample order:
nlm 07221-06

Note:
These steel tube turnbuckle nuts are closed form and have a RH thread one end and LH thread other end.

The turnbuckle nuts conform with the German BRL A and bear the Ü symbol (ÜZ – Certificate of conformity from a recognised certification authority).

Order No.	D1	D2	D3	D4	C	L	M	Load capacity N
07221-08	M8	17,2	12	8	3,6	110	10	10000
07221-10	M10	21,3	15	8	4	125	12	16000
07221-12	M12	25	18	10	4	125	15	24000
07221-16	M16	30	22,5	10	4,5	170	20	44000
07221-20	M20	33,7	27	12	5	200	24	69000
07221-24	M24	42,4	32	12	5,6	255	29	100000
07221-30	M30	51	38	16	6,3	255	36	158000

Turnbuckle nuts

hexagonal DIN 1479

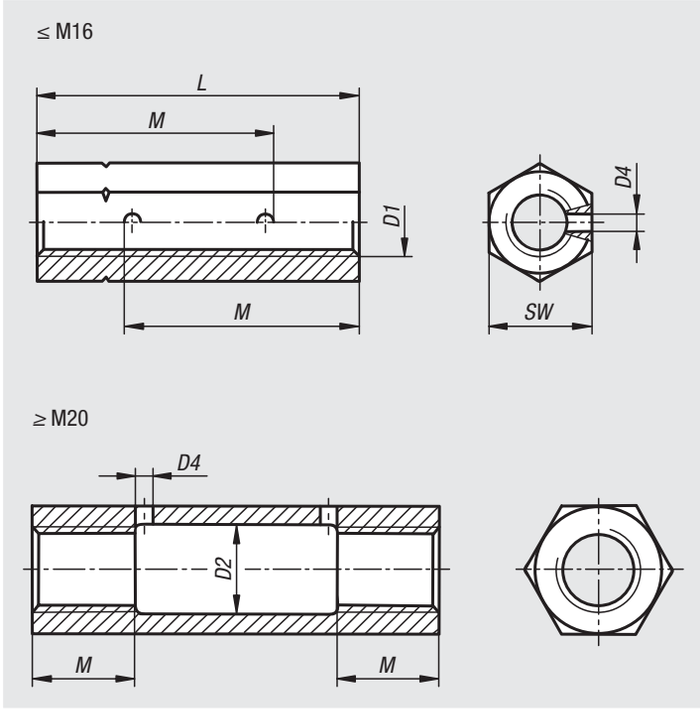

Material:
Steel.

Version:
galvanized.

Sample order:
nlm 07222-06

Note:
These hexagonal turnbuckle have a RH thread one end and LH thread other end.

The turnbuckle nuts conform with the German BRL A and bear the Ü symbol (ÜZ – Certificate of conformity from a recognised certification authority).

Order No.	D1	D2	D4	L	M	SW	Load capacity N
07222-06	M6	-	4	30	22,5	10	3900
07222-08	M8	-	4	35	25	13	7200
07222-10	M10	-	4	45	33	16	11400
07222-12	M12	-	4	55	40	18	16500
07222-16	M16	-	4	75	55	24	30700
07222-20	M20	21	4	95	24	30	48000
07222-24	M24	26	4	115	29	36	69000
07222-30	M30	32	4	125	36	46	110000

Hexagon nuts with collar

height 1.5xD, DIN 6331 enhanced

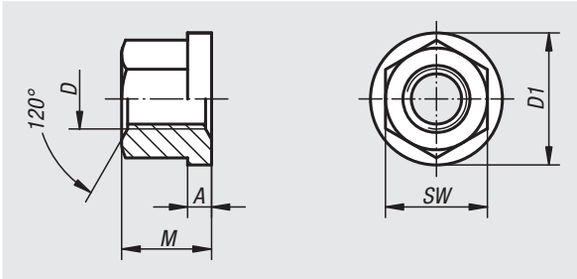

Material:
Carbon steel, stainless steel 1.4301 or 1.4401.

Version:
Steel grade 10, black.
Stainless steel bright.

Sample order:
nlm 07240-16

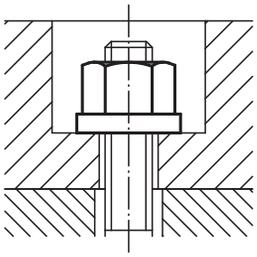

Order No. high carbon steel -	Order No. stainless steel 1.4301	Order No. stainless steel 1.4401	D	M = 1,5 x D	A	D1	SW
07240-05	-	-	M5	7,5	2	12	9
07240-06	**07240-806**	-	M6	9	3	14	10
07240-08	**07240-808**	**07240-908**	M8	12	3,5	18	13
07240-10	**07240-810**	-	M10	15	4	22	16
07240-101	**07240-811**	**07240-910**	M10	15	4	22	17
07240-12	**07240-812**	-	M12	18	4	25	18
07240-121	**07240-8121**	**07240-912**	M12	18	4	25	19
07240-14	-	-	M14	21	4,5	28	22
07240-16	**07240-816**	**07240-916**	M16	24	5	31	24
07240-18	-	-	M18	27	5	34	27
07240-20	**07240-820**	**07240-920**	M20	30	6	37	30
07240-22	-	-	M22	33	6	40	34
07240-24	-	-	M24	36	6	45	36
07240-30	-	-	M30	45	8	58	46
07240-36	-	-	M36	54	10	68	55

Hexagon nuts

with no-loss washer

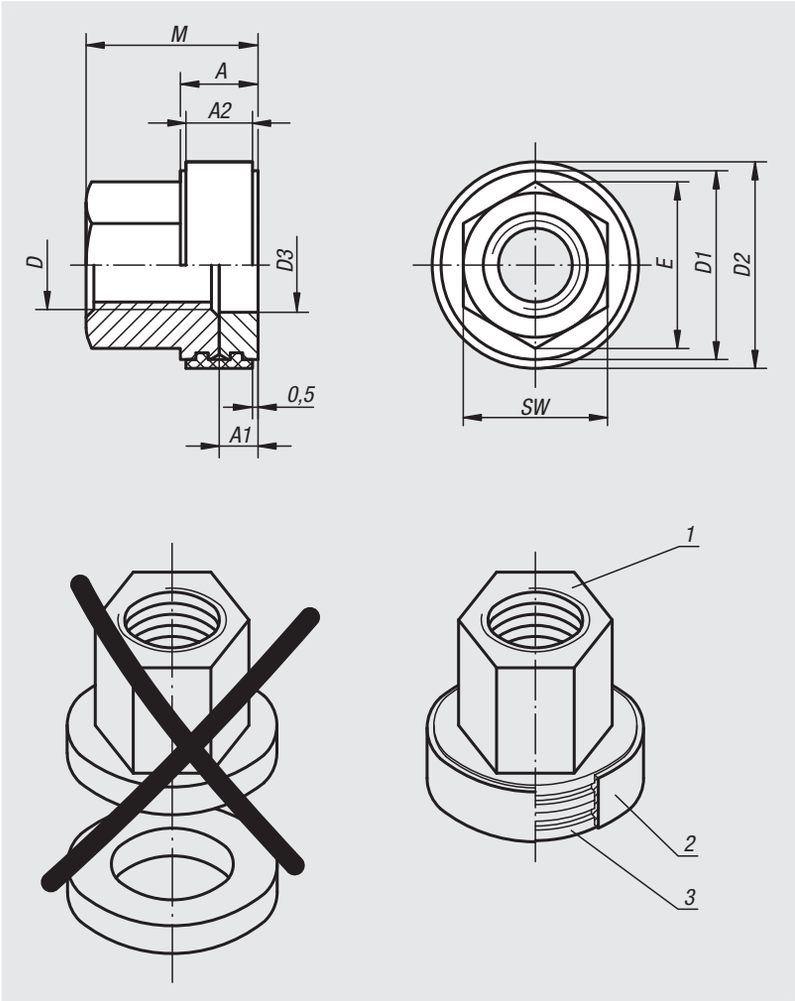

Material:
Hex nut and washer carbon steel.
Retaining ring PA 6 black.

Version:
Hexagonal nut and washer tempered, black oxidised.
Hexagonal nut grade 10.

Sample order:
nlm 07242-12

Advantages:
We bring together what belongs together. A nut and washer in a single unit.
- A compact unit.
- The washer is permanently attached to the hexagonal nut by a retaining ring.
- Components such as expensive special claw clamps, clamping disks, flanges etc. are protected by the hex nut with washer. The reduced wear leads to cost advantages.
- Other cost advantages in procurement - a single ordering process where previously two were required.

Drawing reference:
1) hexagonal nut
2) retaining ring
3) washer

Order No.	D	M	A	A1	A2	D1	D2	D3	E	SW
07242-08	M8	15,5	7	3,5	6	17	18,6	8,5	15	13
07242-10	M10	19	8	4	7	21	22,7	10,5	18,5	16
07242-12	M12	22	8	4	7	24	25,7	12,5	20,8	18
07242-16	M16	29	10	5	9	30	32	16,5	27,7	24
07242-20	M20	36	12	6	11	36	38	20,5	34,6	30
07242-24	M24	42	12	6	11	44	46	24,5	41,6	36

Hexagon nuts

height 1.5xD, DIN 6330 enhanced

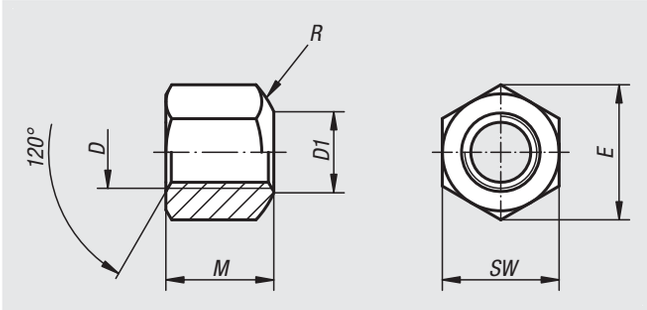

Material:
Carbon steel or stainless steel (A2).

Version:
Tempered to 10, black.
Stainless steel A 2-70, bright.

Sample order:
nlm 07260-12

Note:
These nuts can be used with spherical washers 07420 Form D and G.

Features:
Form B: with spherical face one end

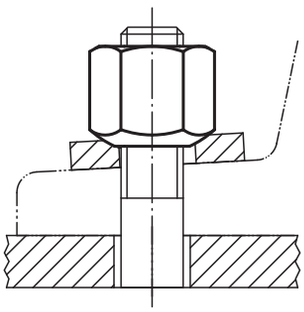

Order No.	Main material	D	M = 1,5 x D	D1	SW	E	R
07260-05	high carbon steel	M5	7,5	6,5	9	10,4	7
07260-06	high carbon steel	M6	9	7	10	11,5	9
07260-08	high carbon steel	M8	12	9	13	15	11
07260-10	high carbon steel	M10	15	11,5	16	18,4	15
07260-101	high carbon steel	M10	15	11,5	17	19,6	15
07260-12	high carbon steel	M12	18	14	18	20,7	17
07260-121	high carbon steel	M12	18	14	19	21,9	17
07260-14	high carbon steel	M14	21	16	22	25,4	20
07260-16	high carbon steel	M16	24	18	24	27,7	22
07260-18	high carbon steel	M18	27	20	27	31,2	24,5
07260-20	high carbon steel	M20	30	22	30	34,6	27
07260-22	high carbon steel	M22	33	24	32	36,9	29
07260-24	high carbon steel	M24	36	26	36	41,6	32
07260-30	high carbon steel	M30	45	32	46	53,1	41
07260-36	high carbon steel	M36	54	38	55	63,5	50
07260-806	stainless steel	M6	9	7	10	11,5	9
07260-808	stainless steel	M8	12	9	13	15	11
07260-810	stainless steel	M10	15	11,5	16	18,4	15
07260-811	stainless steel	M10	15	11,5	17	19,6	15
07260-812	stainless steel	M12	18	14	18	20,7	17
07260-816	stainless steel	M16	24	18	24	27,7	22
07260-820	stainless steel	M20	30	22	30	34,6	27

Hexagon nuts

with spherical seat

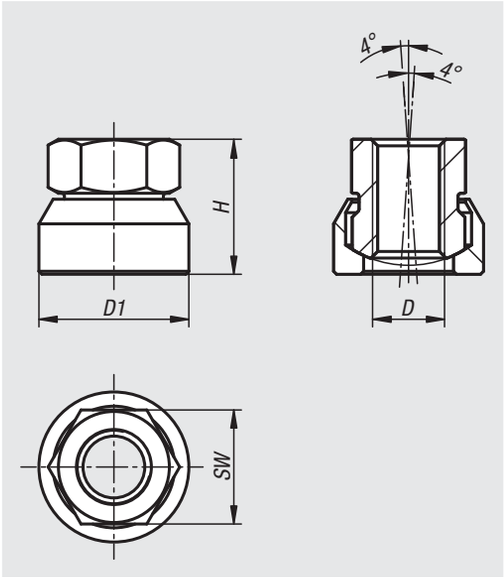

Material:
Carbon steel or stainless steel.

Version:
Steel version:
tempered to 900 N/mm², black oxidised.
Stainless steel version:
tempered to 900 N/mm², bright.

Sample order:
nlm 07265-12

Note:
Captive components (one-piece).

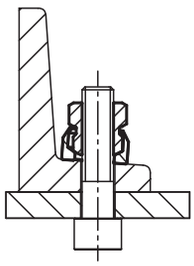

Order No.	Main material	D	D1	H	SW
07265-08	steel	M8	18	15	13
07265-10	steel	M10	22	18,5	17
07265-12	steel	M12	25	22,5	19
07265-16	steel	M16	31	29	24
07265-808	stainless steel	M8	18	15	13
07265-810	stainless steel	M10	22	18,5	17
07265-812	stainless steel	M12	25	22,5	19
07265-816	stainless steel	M16	31	29	24

07280

Hexagon domed cap nuts

similar to DIN 1587

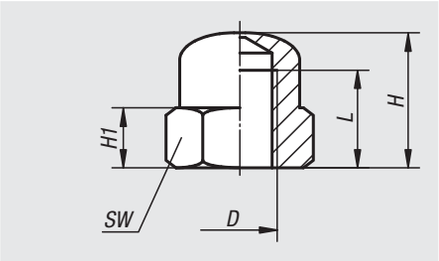

Material:
Steel.

Version:
Steel grade 8, black oxidised.

Sample order:
nlm 07280-10

Order No.	D	H	H1	L	SW
07280-05	M5	10	4	6,5	9
07280-06	M6	12	5	8	10
07280-08	M8	15	6,5	11	13
07280-10	M10	18	8	13	17
07280-12	M12	22	10	16	19
07280-14	M14	25	11	18	22
07280-16	M16	28	13	21	24
07280-20	M20	34	16	26	30

07300

Washers

medium DIN EN ISO 7089 A

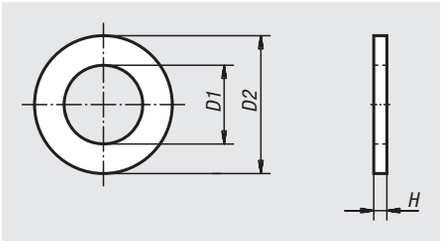

Material:
Steel 140 HV or stainless steel (A 2-70)

Version:
Bright.

Sample order:
nlm 07300-10

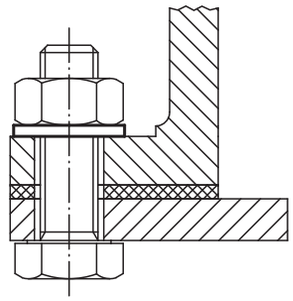

Order No. steel	Order No. stainless steel	for screws	D1	D2	H
07300-03	**07300-103**	M3	3,2	7	0,5
07300-04	**07300-104**	M4	4,3	9	0,8
07300-05	**07300-105**	M5	5,3	10	1
07300-06	**07300-106**	M6	6,4	12	1,6
07300-08	**07300-108**	M8	8,4	16	1,6
07300-10	**07300-110**	M10	10,5	20	2
07300-12	**07300-112**	M12	13	24	2,5
07300-14	**07300-114**	M14	15	28	2,5
07300-16	**07300-116**	M16	17	30	3
07300-20	**07300-120**	M20	21	37	3
07300-24	**07300-124**	M24	25	44	4
07300-30	**07300-130**	M30	31	56	4
07300-36	**07300-136**	M36	37	66	5

Conical spring washers

DIN 6796

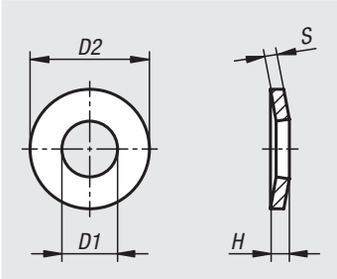

Material:
Spring steel

Version:
Hardened, bright, oiled or mechanically galvanised.

Sample order:
nlm 07303-03

Note:
The special shape (formed like a disc spring) enables the conical spring washer to achieve a high spring effect. The spring force resulting from the flattening load washer amounts to 70–90% of the corresponding contact pressure of a screw of grade 8.8–10.9.

Conical spring washers are used to compensate for subsidence formation in screw connections and to prevent a loosening or unfastening of the connection. The locking effect is purely frictional.

Order No.	Order No. galvanized	for screws	D1	D2	H	S
07303-04	**07303-104**	M4	4,3	9	1,3	1
07303-05	**07303-105**	M5	5,3	11	1,55	1,2
07303-06	**07303-106**	M6	6,4	14	2	1,5
07303-08	**07303-108**	M8	8,4	18	2,6	2
07303-10	**07303-110**	M10	10,5	23	3,2	2,5
07303-12	**07303-112**	M12	13	29	3,95	3
07303-14	**07303-114**	M14	15	35	4,65	3,5
07303-16	**07303-116**	M16	17	39	5,25	4
07303-18	**07303-118**	M18	19	42	5,8	4,5
07303-20	**07303-120**	M20	21	45	6,4	5
07303-22	**07303-122**	M22	23	49	7,05	5,5
07303-24	**07303-124**	M24	25	56	7,75	6
07303-30	**07303-130**	M30	31	70	9,2	7

Spring washers

DIN 137 B

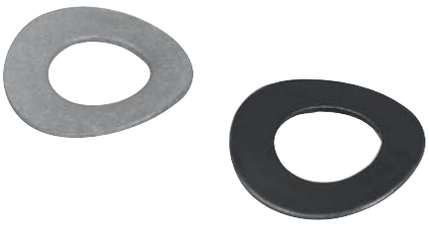

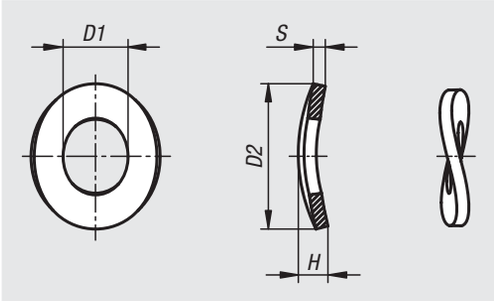

Material:
Spring steel

Version:
Bright or mechanically galvanised.

Sample order:
nlm 07304-03

Note:
Spring washers Form B = corrugated.

Order No.	Order No. galvanized	for screws	D1	D2	H	S
07304-03	**07304-103**	M3	3,2	8	1,6	0,5
07304-04	**07304-104**	M4	4,3	9	2	0,5
07304-05	**07304-105**	M5	5,3	11	2,2	0,5
07304-06	**07304-106**	M6	6,4	12	2,6	0,5
07304-08	**07304-108**	M8	8,4	15	3	0,8
07304-10	**07304-110**	M10	10,5	18	4,2	1
07304-12	**07304-112**	M12	13	24	5	1,2
07304-14	**07304-114**	M14	15	28	6	1,6
07304-16	**07304-116**	M16	17	30	6,4	1,6
07304-18	**07304-118**	M18	19	34	6,6	1,6
07304-20	**07304-120**	M20	21	36	7,4	1,6
07304-22	**07304-122**	M22	23	40	7,8	1,8
07304-24	**07304-124**	M24	25	44	8,2	1,8
07304-27	**07304-127**	M27	28	50	9,4	2
07304-30	**07304-130**	M30	31	56	10	2,2

Washers large OD

DIN 9021

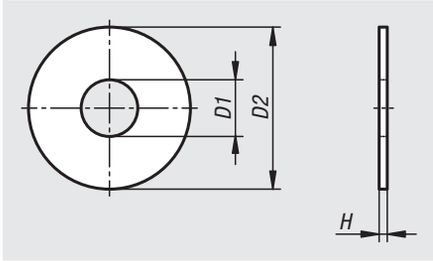

Material:
Steel or stainless steel (A 2)

Version:
Galvanised steel, hardness
D1 ≤ 14 = 140 HV.
D1 > 17 = 100 HV.
Stainless steel, bright.

Sample order:
nlm 07305-03

Note:
The pulleys have an OD of D2 = ~3 × D1.

Order No. steel	Order No. stainless steel	for screws	D1	D2	H
07305-03	**07305-103**	M3	3,2	9	0,8
07305-04	**07305-104**	M4	4,3	12	1
07305-05	**07305-105**	M5	5,3	15	1,2
07305-06	**07305-106**	M6	6,4	18	1,6
07305-08	**07305-108**	M8	8,4	24	2
07305-10	**07305-110**	M10	10,5	30	2,5
07305-12	**07305-112**	M12	13	37	3
07305-14	**07305-114**	M14	15	44	3
07305-16	**07305-116**	M16	17	50	3
07305-18	**07305-118**	M18	20	56	4
07305-20	**07305-120**	M20	22	60	4
07305-24	**07305-124**	M24	26	72	5
07305-30	**-**	M30	33	92	6

Lock washer self-locking

DIN 25201

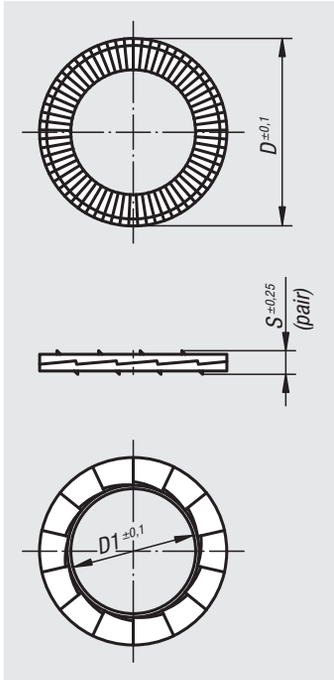

Material:
Steel or stainless steel

Version:
Steel galvanised, hardness ≥ 465 HV 1.
Stainless steel hardness ≥ 520 HV 0.05.

Sample order:
nlm 07310-0817261

Note:
These lock washers (also known as wedge lock washers) ensure that bolts and screws subjected to transverse loads, chattering or vibrations do not work loose. A fastener is also secure by low tightening torques. If a screw or nut that is subjected to dynamic loads starts to work loose, the washer in contact turns with it. The teeth on this washer lock into the teeth on the counter washer preventing the screw or nut turning further. The more a fastener tries to work loose, the more it is blocked by the teeth on the washers.

Supplied glued together in pairs.

Order No.	Version	Main material	for screws	for screws inch	D	D1	S
07310-030718	standard	steel	M3	1/8	7	3,4	1,8
07310-050918	standard	steel	M5	3/16	9	5,4	1,8
07310-061118	standard	steel	M6	1/4	10,8	6,5	1,8
07310-081426	standard	steel	M8	5/16	13,5	8,7	2,5
07310-101726	standard	steel	M10	3/8	16,6	10,7	2,5
07310-122026	standard	steel	M12	1/2	19,5	13	2,5
07310-162537	standard	steel	M16	5/8	25,4	17	3,4
07310-182937	standard	steel	M18	11/16	29	19,5	3,4
07310-203137	standard	steel	M20	3/4	30,7	21,4	3,4
07310-030722	standard	stainless steel	M3	1/8	7	3,4	2,2
07310-050922	standard	stainless steel	M5	3/16	9	5,4	2,2
07310-061122	standard	stainless steel	M6	1/4	10,8	6,5	2,2
07310-081422	standard	stainless steel	M8	5/16	13,5	8,7	2,2
07310-101722	standard	stainless steel	M10	3/8	16,6	10,7	2,2
07310-122022	standard	stainless steel	M12	1/2	19,5	13	2,2
07310-162532	standard	stainless steel	M16	5/8	25,4	17	3,2
07310-182932	standard	stainless steel	M18	11/16	29	19,5	3,2
07310-203132	standard	stainless steel	M20	3/4	30,7	21,4	3,2
07310-040918	large face area	steel	M4	5/32	9	4,4	1,8
07310-061426	large face area	steel	M6	1/4	13,5	6,5	2,5
07310-0817261	large face area	steel	M8	5/16	16,6	8,7	2,5
07310-1021261	large face area	steel	M10	3/8	21	10,7	2,5
07310-1225371	large face area	steel	M12	1/2	25,4	13	3,4
07310-1631371	large face area	steel	M16	5/8	30,7	17	3,4
07310-040922	large face area	stainless steel	M4	5/32	9	4,4	2,2
07310-061422	large face area	stainless steel	M6	1/4	13,5	6,5	2,2
07310-081722	large face area	stainless steel	M8	5/16	16,6	8,7	2,2
07310-122532	large face area	stainless steel	M12	1/2	25,4	13	3,2
07310-163132	large face area	stainless steel	M16	5/8	30,7	17	3,2

Mounting examples for DIN 25201 self-locking screw lock washers

Tapped holes
Wedge lock washers secure the screw against the seating face.

Counterbores
The OD of the standard lock washers has been developed to suit DIN 974. The washers fit under the head of standard screws.

Through holes
Two pairs of lock washers are need to for drilled through holes – one pair secures the screw head and the other pair secures the nut.
To prevent additional settling, the nuts and bolts should be mounted so that the wedge faces of the lock washer pairs interlock completely.

Studs
The nut is secured without the need to glue the stud.

Elongated holes

Soft surfaces

Applications with elongated holes/soft surfaces
To optimise the surface pressure on elongated holes or soft materials e.g. aluminium, the use of retaining washers with a larger seating face in combination with a flange nut/screw is recommended.

Applications where the lock washer principle does not work
- Non-fixed surfaces (see image on left)
- Surface hardness greater than washer hardness
- Very soft surfaces such as wood or plastic
- Applications with extremely high setting behaviour

Washers for clamps

steel or aluminium DIN 6340

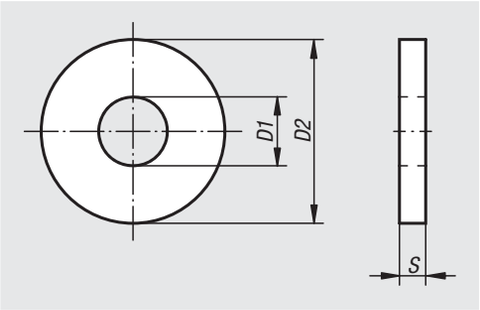

Material:
Steel or EN AW-7022

Version:
Stamped steel: pressed flat and tempered to 1200-1400 N/mm², black.
Turned steel: black oxidised.
Turned aluminium: anodized.

Sample order:
nlm 07320-16

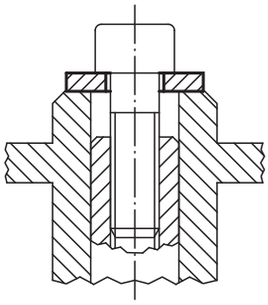

Order No. steel	Order No. Aluminium	Order No. steel turned	D1	D2	S	for screw
07320-06	**07320-206**	**07320-306**	6,4	17	3	M6
07320-08	**07320-208**	**07320-308**	8,4	23	4	M8
07320-10	**07320-210**	**07320-310**	10,5	28	4	M10
07320-12	**07320-212**	**07320-312**	13	35	5	M12
07320-14	**07320-214**	**07320-314**	15	40	5	M14
07320-16	**07320-216**	**07320-316**	17	45	6	M16
07320-18	**07320-218**	**07320-318**	19	45	6	M18
07320-20	**07320-220**	**07320-320**	21	50	6	M20
07320-22	**07320-222**	-	23	50	8	M22
07320-24	**07320-224**	-	25	60	8	M24
07320-30	**07320-230**	-	31	68	10	M30
07320-36	**07320-236**	-	38	80	10	M36

Notes

Circlips for shafts

DIN 471

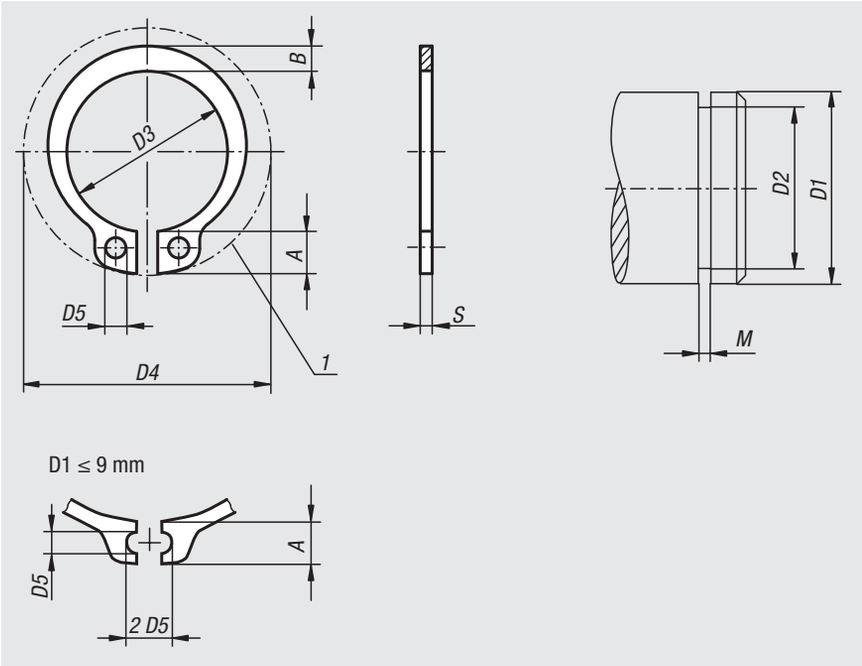

Material:
Spring steel or 1.4122 stainless steel.

Version:
Phosphated spring steel.
Bright stainless steel.

Sample order:
nlm 07330-050600

Note:
DIN 471 circlips are retaining rings mounted in a groove on a shaft OD. They withstand high axial forces between machine elements (e.g. bearings) and the groove in which the ring is mounted.

Drawing reference:
1) installation space

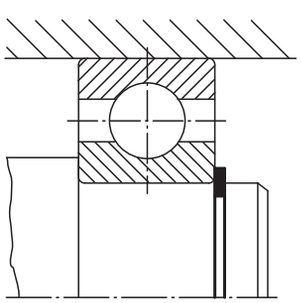

Circlips for shafts

DIN 471

Order No. steel	Order No. stainless steel	A	B	D1	D2	D3	D4	D5	M	S
07330-030400	-	1,9	0,8	3	2,8	2,7	7	1	0,5	0,4
07330-040400	07330-040401	2,2	0,9	4	3,8	3,7	8,6	1	0,5	0,4
07330-050600	07330-050601	2,5	1,1	5	4,8	4,7	10,3	1	0,7	0,6
07330-060700	07330-060701	2,7	1,3	6	5,7	5,6	11,7	1,2	0,8	0,7
07330-070800	07330-070801	3,1	1,4	7	6,7	6,5	13,5	1,2	0,9	0,8
07330-080800	07330-080801	3,2	1,5	8	7,6	7,4	14,7	1,2	0,9	0,8
07330-091000	07330-091001	3,3	1,7	9	8,6	8,4	16	1,2	1,1	1
07330-101000	07330-101001	3,3	1,8	10	9,6	9,3	17	1,5	1,1	1
07330-121000	07330-121001	3,3	1,8	12	11,5	11	19	1,7	1,1	1
07330-141000	07330-141001	3,5	2,1	14	13,4	12,9	21,4	1,7	1,1	1
07330-151000	07330-151001	3,6	2,2	15	14,3	13,8	22,6	1,7	1,1	1
07330-161000	07330-161001	3,7	2,2	16	15,2	14,7	23,8	1,7	1,1	1
07330-171000	07330-171001	3,8	2,3	17	16,2	15,7	25	1,7	1,1	1
07330-181200	07330-181201	3,9	2,4	18	17	16,5	26,2	2	1,3	1,2
07330-191200	07330-191201	3,9	2,5	19	18	17,5	27,2	2	1,3	1,2
07330-201200	07330-201201	4	2,6	20	19	18,5	28,4	2	1,3	1,2
07330-221200	07330-221201	4,2	2,8	22	21	20,5	30,8	2	1,3	1,2
07330-241200	07330-241201	4,4	3	24	22,9	22,2	33,2	2	1,3	1,2
07330-251200	07330-251201	4,4	3	25	23,9	23,2	34,2	2	1,3	1,2
07330-261200	07330-261201	4,5	3,1	26	24,9	24,2	35,5	2	1,3	1,2
07330-281500	07330-281501	4,7	3,2	28	26,6	25,9	37,9	2	1,6	1,5
07330-301500	07330-301501	5	3,5	30	28,6	27,9	40,5	2	1,6	1,5
07330-321500	07330-321501	5,2	3,6	32	30,3	29,6	43	2,5	1,6	1,5
07330-351500	07330-351501	5,6	3,9	35	33	32,2	46,8	2,5	1,6	1,5
07330-381750	07330-381751	5,8	4,2	38	36	35,2	50,2	2,5	1,85	1,75
07330-401750	07330-401751	6	4,4	40	37,5	36,5	52,6	2,5	1,85	1,75
07330-451750	07330-451751	6,7	4,7	45	42,5	41,5	59,1	2,5	1,85	1,75
07330-471750	-	6,8	4,9	47	44,5	43,5	-	2,5	1,85	1,75
07330-502000	07330-502001	6,9	5,1	50	47	45,8	64,5	2,5	2,15	2
07330-552000	07330-552001	7,2	5,4	55	52	50,8	70,2	2,5	2,15	2
07330-602000	07330-602001	7,4	5,8	60	57	55,8	75,6	2,5	2,15	2
07330-752500	07330-752501	8,4	7	75	72	70,5	92,7	3	2,65	2,5

Circlips for bores

DIN 472

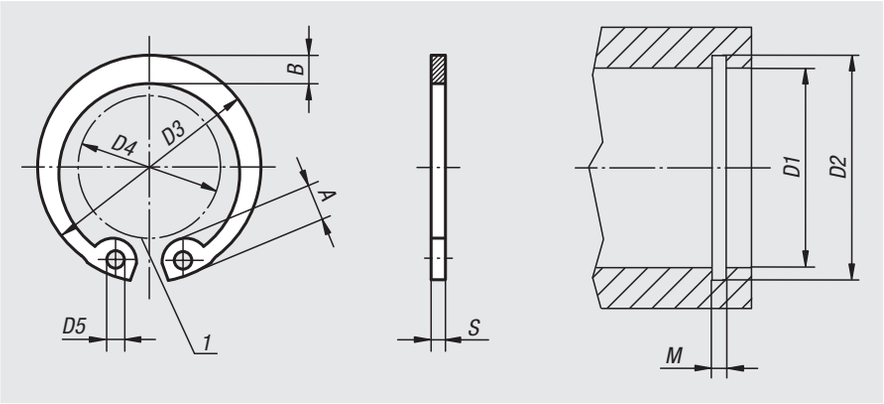

Material:
Spring steel or 1.4122 stainless steel.

Version:
Phosphated spring steel.
Bright stainless steel.

Sample order:
nlm 07331-080800

Note:
DIN 472 circlips are retaining rings which are mounted in a groove in a bore. They can withstand high axial forces between machine elements (e.g. bearings) and the groove in the ID in which the ring is mounted.

Drawing reference:
1) installation space

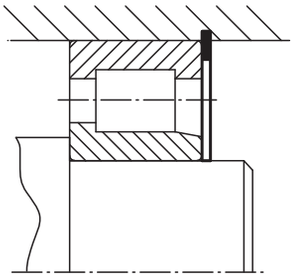

Order No. steel	Order No. stainless steel	A	B	D1	D2	D3	D4	D5	M	S
07331-080800	07331-080801	2,4	1,1	8	8,4	8,7	3	1	0,9	0,8
07331-091000	07331-091001	2,5	1,3	9	9,4	9,8	3,7	1	0,9	0,8
07331-101000	07331-101001	3,2	1,4	10	10,4	10,8	3,3	1,2	1,1	1
07331-121000	07331-121001	3,4	1,7	12	12,5	13	4,9	1,5	1,1	1
07331-141000	07331-141001	3,7	1,9	14	14,6	15,1	6,2	1,7	1,1	1
07331-151000	07331-151001	3,7	2	15	15,7	16,2	7,2	1,7	1,1	1
07331-161000	07331-161001	3,8	2	16	16,8	17,3	8	1,7	1,1	1
07331-171000	07331-171001	3,9	2,1	17	17,8	18,3	8,8	1,7	1,1	1
07331-181000	-	4,1	2,2	18	19	19,5	9,4	2	1,1	1
07331-191000	07331-191001	4,1	2,2	19	20	20,5	10,4	2	1,1	1
07331-201000	07331-201001	4,2	2,3	20	21	21,5	11,2	2	1,1	1
07331-221000	07331-221001	4,2	2,5	22	23	23,5	13,2	2	1,1	1
07331-241200	07331-241201	4,4	2,6	24	25,2	25,9	14,8	2	1,3	1,2
07331-251200	07331-251201	4,5	2,7	25	26,2	26,9	15,5	2	1,3	1,2
07331-261200	07331-261201	4,7	2,8	26	27,2	27,9	16,1	2	1,3	1,2
07331-281200	07331-281201	4,8	2,9	28	29,4	30,1	17,9	2	1,3	1,2
07331-301200	07331-301201	4,8	3	30	31,4	32,1	19,9	2	1,3	1,2
07331-321200	07331-321201	5,4	3,2	32	33,7	34,4	20,6	2,5	1,3	1,2
07331-351500	07331-351501	5,4	3,4	35	37	37,8	23,6	2,5	1,6	1,5
07331-381500	07331-381501	5,5	3,7	38	40	40,8	26,4	2,5	1,6	1,5
07331-401750	07331-401751	5,8	3,9	40	42,5	43,5	27,8	2,5	1,85	1,75
07331-451750	07331-451751	6,2	4,3	45	47,5	48,5	32	2,5	1,85	1,75
07331-471750	-	6,4	4,4	47	49,5	50,5	33,5	2,5	1,85	1,75
07331-502000	07331-502001	6,5	4,6	50	53	54,2	36,3	2,5	2,15	2
07331-552000	07331-552001	6,8	5	55	58	59,2	40,7	2,5	2,15	2
07331-602000	07331-602001	7,3	5,4	60	63	64,2	44,7	2,5	2,15	2
07331-752500	07331-752501	7,8	6,6	75	78	79,5	58,6	3	2,65	2,5

Circlips E-type

DIN 6799

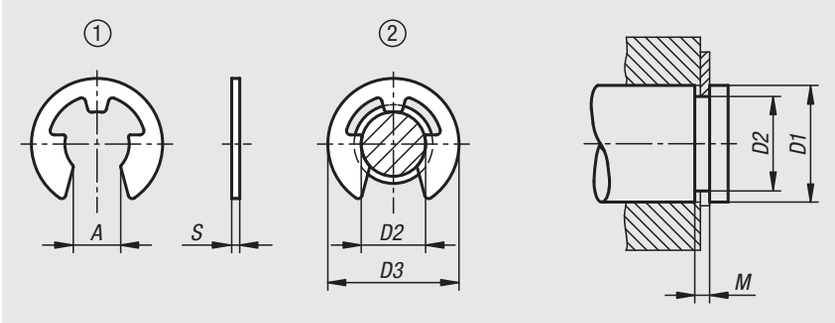

Material:
Spring steel or 1.4122 stainless steel.

Version:
Spring steel galvanised.
Stainless steel bright.

Sample order:
nlm 07332-0230

Note:
E-type circlips are pushed into a groove on a shaft. They are DIN 6799 standard elements and are designed for use on small shafts.

Nominal size = groove ID D2

Drawing reference:
1) loose
2) on shaft

Order No. stainless steel	Order No. steel	A	D1	D2	D3	M	S
07332-0151	-	1,28	2-2,5	1,5	4,25	0,44	0,4
07332-0191	-	1,61	2,5-3	1,9	4,8	0,54	0,5
07332-0231	**07332-0230**	1,94	3-4	2,3	6,3	0,64	0,6
07332-0321	**07332-0320**	2,7	4-5	3,2	7,3	0,64	0,6
07332-0401	**07332-0400**	3,34	5-7	4	9,3	0,74	0,7
07332-0501	**07332-0500**	4,11	6-8	5	11,3	0,74	0,7
07332-0601	**07332-0600**	5,26	7-9	6	12,3	0,74	0,7
07332-0701	**07332-0700**	5,84	8-11	7	14,3	0,94	0,9
07332-0801	**07332-0800**	6,52	9-12	8	16,3	1,05	1
07332-0901	**07332-0900**	7,63	10-14	9	18,8	1,15	1,1
07332-1001	**07332-1000**	8,32	11-15	10	20,4	1,25	1,2
07332-1201	**07332-1200**	10,45	13-18	12	23,4	1,35	1,3

Split pins

EN ISO 1234

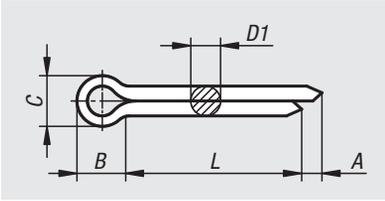

Material:
Steel or stainless steel 1.4310.

Version:
Steel galvanized.
Stainless steel bright.

Sample order:
nlm 07336-1010X10 (include length L)

Note:
Split pins are used in machine construction and automotive engineering as retaining elements. They are often used for securing castle nuts. After the split pin is pushed through a hole, the ends are bent over to ensure a secure lock.

The split pin can be shortened. As a rule, the split pin should be roughly double the length of the hole.

As the material structure can weaken through bending and straightening, the split pins should not be reused after they have been removed from the hole.

Order No.	Main material	Hole diameters	D1 max.	L	A min.	B	C max.	for screws	for screw Ø
07336-1010X	steel	1	0,9	10/12/16/20/25	0,8	3	1,8	3,5-4,5	3-4
07336-1016X	steel	1,6	1,4	12/16/20/25/32	1,25	3,2	2,8	5,5-7	5-6
07336-1020X	steel	2	1,8	10/16/20/25/32/36/40/50	1,25	4	3,6	7-9	6-8
07336-1025X	steel	2,5	2,3	20/25/32/36/40/50	1,25	5	4,6	9-11	8-9
07336-1032X	steel	3,2	2,9	16/20/25/32/36/40/50/63	1,6	6,4	5,8	11-14	9-12
07336-1040X	steel	4	3,7	20/25/32/36/40/50/63/80	2	8	7,4	14-20	12-17
07336-1050X	steel	5	4,6	25/32/36/40/50/63/80	2	10	9,2	20-27	17-23
07336-1063X	steel	6,3	5,9	32/36/40/50/63/80/100	2	12,6	11,8	27-39	23-29
07336-1080X	steel	8	7,5	50/63/80/100	2	16	15	39-56	29-44
07336-2010X	stainless steel	1	0,9	16/20	0,8	3	1,8	3,5-4,5	3-4
07336-2016X	stainless steel	1,6	1,4	12/16/20/25/32	1,25	3,2	2,8	5,5-7	5-6
07336-2020X	stainless steel	2	1,8	10/16/20/25/32/40	1,25	4	3,6	7-9	6-8
07336-2025X	stainless steel	2,5	2,3	20/25/32	1,25	5	4,6	9-11	8-9
07336-2032X	stainless steel	3,2	2,9	16/20/25/32/36/40/50/63	1,6	6,4	5,8	11-14	9-12
07336-2040X	stainless steel	4	3,7	20/25/32/40/50/63	2	8	7,4	14-20	12-17
07336-2050X	stainless steel	5	4,6	32/36/40/50/63	2	10	9,2	20-27	17-23
07336-2063X	stainless steel	6,3	5,9	36/40/50/63/80	2	12,6	11,8	27-39	23-29
07336-2080X	stainless steel	8	7,5	50/80/100	2	16	15	39-56	29-44

R-clips

DIN 11024

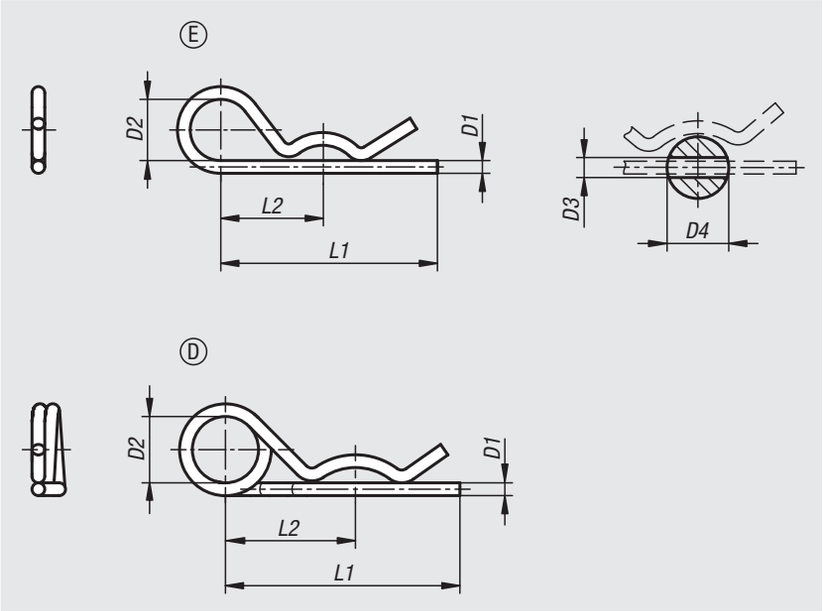

Material:
Steel or stainless steel 1.4310.

Version:
Steel galvanized.
Stainless steel bright.

Sample order:
nlm 07337-11200

Note:
R-clips are used for securing bolts and axles. They are easy to install and can be reused. The ends have no sharp edges.

Double coil R-clips have a flatter spring characteristics and are easier to install. The double coil allows a tether cable to be attached to prevent loss.

Drawing reference:
Form E: with single coil
Form D: with double coil

Order No. steel	Order No. stainless steel	Form	D1	D2	D3	for screw Ø	L1	L2
07337-11200	**07337-21200**	E	2	10	2,5	9-14	50	25
07337-11300	**07337-21300**	E	3	18	3,5	10-16	60	28
07337-11400	**07337-21400**	E	4	20	4,5	16-20	60	30
07337-11500	**07337-21500**	E	5	24	6	20-28	85	40
07337-11600	**07337-21600**	E	6	30	7	28-40	105	50
07337-11700	**-**	E	7	30	8	28-45	105	50
07337-12225	**07337-22225**	D	2,25	20	2,5	9-11,2	42	24
07337-12280	**07337-22280**	D	2,8	20	3,2	11,2-14	48	26
07337-12360	**07337-22360**	D	3,6	20	4	14-20	64	32
07337-12450	**07337-22450**	D	4,5	25	5	20-26	80	39
07337-12560	**07337-22560**	D	5,6	25	6,3	26-34	97	45
07337-12630	**-**	D	6,3	30	7	34-45	125	56
07337-12700	**-**	D	7	30	8	45-56	150	63

Disc springs

DIN EN 16983

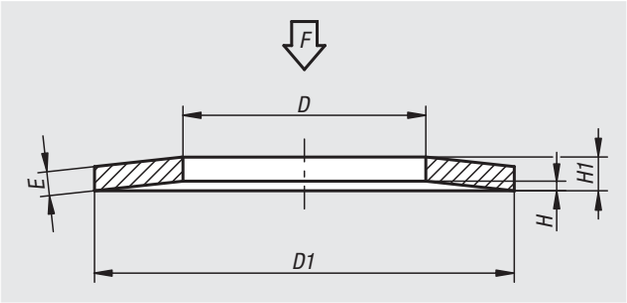

Material:
Spring steel

Version:
Phosphated and oiled.

Sample order:
nlm 07360-080

Note:
If several disc springs are assembled to form a spring packet i.e. concave face to convex face, the spring force of a single disc can be multiplied by the number of discs giving high spring force with short spring travel.
If several disc springs are assembled to form a spring column i.e. concave face to concave face and convex face to convex face, the spring force of the entire column is the same as that of a single disc giving low spring force with long spring travel.

F = 0.25 x H

Order No.	D	D1	E	H	H1	F N
07360-030	3,2	8	0,4	0,2	0,6	69,2
07360-050	5,2	10	0,4	0,3	0,7	87,8
07360-051	5,2	15	0,7	0,55	1,25	340,2
07360-060	6,2	12,5	0,5	0,35	0,85	120
07360-061	6,2	12	0,5	0,35	0,85	133,5
07360-070	7,2	14	0,8	0,3	1,1	283,8
07360-080	8,2	16	0,9	0,35	1,25	362,5
07360-081	8,2	16	0,6	0,45	1,05	172
07360-090	9,2	18	1	0,4	1,4	450,6
07360-100	10,2	20	1,1	0,45	1,55	548,2
07360-101	10,2	20	0,9	0,55	1,45	411,7
07360-102	10,2	20	0,8	0,55	1,35	304,3
07360-120	12,2	25	1,5	0,55	2,05	1040
07360-121	12,2	23	1,25	0,6	1,85	863,4
07360-123	12,2	23	1	0,6	1,6	474,7
07360-140	14,2	28	1,5	0,65	2,15	1033
07360-141	14,2	28	1	0,8	1,8	490
07360-160	16,3	31,5	1,75	0,7	2,45	1391
07360-161	16,3	31,5	1,25	0,9	2,15	790,5
07360-180	18,3	35,5	2	0,8	2,8	1864
07360-182	18,3	35,5	1,25	1	2,25	730,9
07360-200	20,4	40	2,25	0,9	3,15	2336
07360-220	22,4	45	2,5	1	3,5	2773
07360-250	25,4	50	3	1,1	4,1	4255
07360-251	25,4	50	2,5	1,4	3,9	3473
07360-280	28,5	56	2	1,6	3,6	1910
07360-310	31	63	2,5	1,75	4,25	2942
07360-360	40,5	70	4	1,7	5,7	9025

Handwheel washers

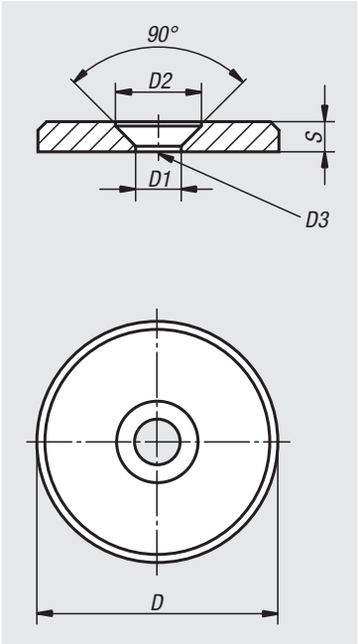

Material:
Steel 1.0718.
Stainless steel 1.4305.

Version:
Steel black oxidised.
Stainless steel bright.

Sample order:
nlm 07375-00416

Note:
These washers are used together with DIN EN ISO 2009 or DIN EN ISO 10642 countersunk screws on the end of shafts with keyways to secure handwheels and crank handles.

The washers can be used with the handwheels 06262, 06263, 06264, 06265, 06271, 06273, 06275, 06277, 06279, 06287, 06288 and crank handles 06500, 06502.

The steel washers can be used as counterparts to magnets.

Drawing reference:
D3 = for countersunk screw ISO 2009 and ISO 10642

1) countersunk screw ISO 2009 and ISO 10642
2) washer
3) handwheel
4) shaft

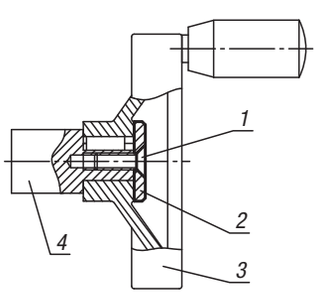

Order No.	Main material	D	D1	D2	D3	S
07375-00310	steel	10	3,2	6	M3	2
07375-00313	steel	13	3,2	6	M3	2
07375-00416	steel	16	4,3	8,4	M4	3
07375-00420	steel	20	4,3	8,4	M4	3
07375-00522	steel	22	5,3	10	M5	3,5
07375-00525	steel	25	5,3	10	M5	3,5
07375-00528	steel	28	5,3	10	M5	3,5
07375-00632	steel	32	6,4	12	M6	4
07375-00636	steel	36	6,4	12	M6	4
07375-00640	steel	40	6,4	12	M6	5
07375-00645	steel	45	6,4	12	M6	6
07375-00652	steel	52	6,4	12	M6	6
07375-10310	stainless steel	10	3,2	6	M3	2
07375-10313	stainless steel	13	3,2	6	M3	2
07375-10416	stainless steel	16	4,3	8,4	M4	3
07375-10420	stainless steel	20	4,3	8,4	M4	3
07375-10522	stainless steel	22	5,3	10	M5	3,5
07375-10525	stainless steel	25	5,3	10	M5	3,5
07375-10528	stainless steel	28	5,3	10	M5	3,5
07375-10632	stainless steel	32	6,4	12	M6	4
07375-10636	stainless steel	36	6,4	12	M6	4
07375-10640	stainless steel	40	6,4	12	M6	5
07375-10645	stainless steel	45	6,4	12	M6	6
07375-10652	stainless steel	52	6,4	12	M6	6

C-washers

DIN 6372 enhanced

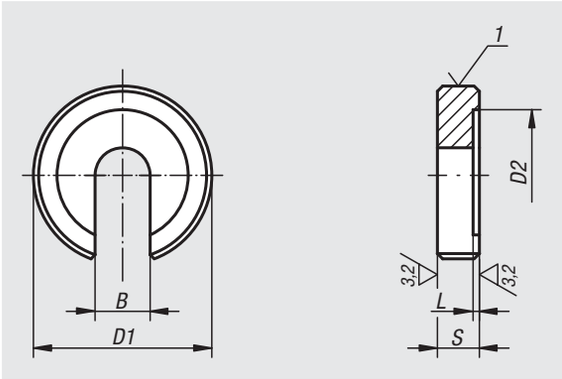

Material:
Carbon steel.

Version:
Tempered and black oxidised.

Sample order:
nlm 07380-12

Drawing reference:
1) cross knurl

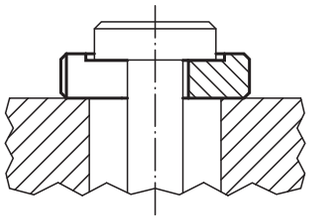

Order No.	B	D1	D2	L	S
07380-05	5,25	17	12	0,75	5
07380-06	6,4	22	16	0,8	6
07380-08	8,4	28	21	1	7
07380-10	10,5	34	25	1,2	8
07380-12	13	40	30	1,8	9
07380-14	14,5	48	33	1,8	12
07380-16	17	56	37	1,8	12
07380-20	21	64	45	2	14
07380-24	25	75	52	2	16
07380-30	31	90	65	2	18
07380-36	37	100	75	2,5	20

Clamping force intensifiers

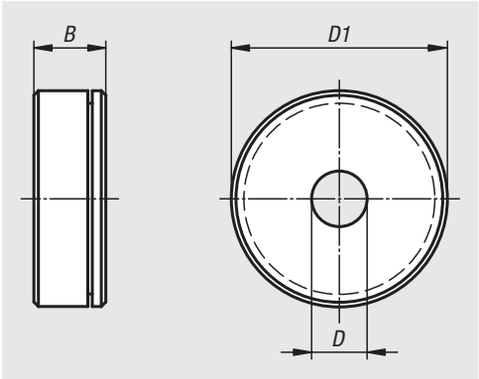

Material:
Bearing housing steel.

Version:
Black oxidised.

Sample order:
nlm 07415-06

Note:
As a rule, the clamping force intensifier is used together with tightening or clamping elements. The integrated axial needle roller thrust bearing unit can achieve ca. twice the clamping force by the same lever length.

Advantages:
The component surface is protected by the stationary lower ring. The higher preload force causes a lower tendency for material relaxation in the thread.

Clamping levers, wing and star grips, knurled knobs or hexagonal and socket head screws etc. can be used as tightening or clamping elements.

With constant torque

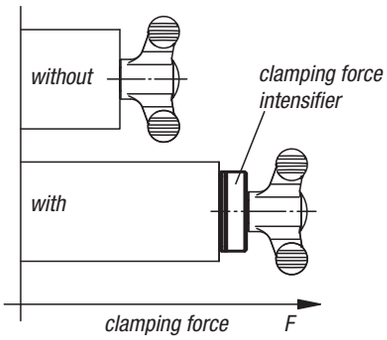

Order No.	B	D	D1
07415-06	8	6	24
07415-08	8	8	25
07415-10	8	10	30
07415-12	8	12	35

Spherical washers

DIN 6319, edition 10/01

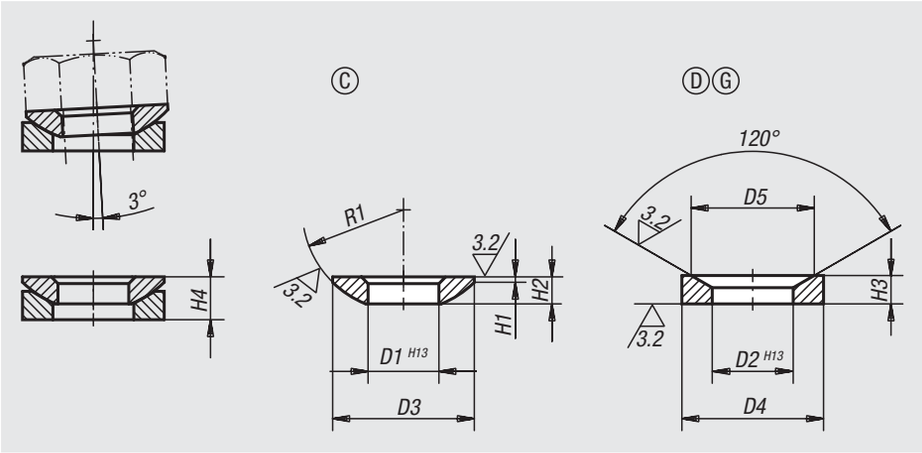

Material:
Mild steel or stainless steel.
Form G carbon steel tempered to HV 390 ±40.

Version:
Steel version case hardened.
Stainless steel version bright, not hardened.

Sample order:
nlm 07420-216

Note:
Conical seat Form G should be used over slots.

Drawing reference:
Form C: spherical washer
Form D: conical seat D4 = D3
Form G: conical seat D4 > D3

Order No. mild steel	Order No. stainless steel	Form	D1	D3	H1	H2	R1	for screw Ø	Load rating max. kN (static load only)
07420-105	-	C	5,25	10,5	0,4	2	7,5	5	6,5
07420-106	**07420-0106**	C	6,4	12	0,7	2,3	9	6	9/6
07420-108	**07420-0108**	C	8,4	17	0,6	3,2	12	8	17/12
07420-110	**07420-0110**	C	10,5	21	0,8	4	15	10	26/16
07420-112	**07420-0112**	C	13	24	1,1	4,6	17	12	38/24
07420-114	-	C	15	28	1,2	5	22	14	53
07420-116	**07420-0116**	C	17	30	1,3	5,3	22	16	73/45
07420-120	**07420-0120**	C	21	36	2	6,3	27	20	117/71
07420-124	**07420-0124**	C	25	44	2,4	8,2	32	24	168/105
07420-130	**07420-0130**	C	31	56	3,6	11,2	41	30	269/191
07420-136	**07420-0136**	C	37	68	4,6	14	50	36	394/-
07420-142	**07420-0142**	C	43	78	6,5	17	58	42	542/-
07420-148	**07420-0148**	C	50	92	8	21	67	48	714/-
07420-156	-	C	58	103	9,5	23	79	56	960
07420-164	-	C	66	120	12	27	93	64	1269

Spherical washers

DIN 6319, edition 10/01

Order No. mild steel	Order No. stainless steel	Form	D2	D4	D5	H3	H4 with conical seat	for screw Ø	Load rating max. kN (static load only)
07420-205	-	D	6	10,5	9,25	2,1	3,1	5	6,5
07420-206	**07420-0206**	D	7,1	12	11	2,8	4	6	9/6
07420-208	**07420-0208**	D	9,6	17	14,5	3,5	5,6	8	17/12
07420-210	**07420-0210**	D	12	21	18,5	4,2	6,3	10	26/16
07420-212	**07420-0212**	D	14,2	24	20	5	8	12	38/24
07420-214	-	D	16,5	28	24,8	5,6	8,2	14	53
07420-216	**07420-0216**	D	19	30	26	6,2	9,3	16	73/45
07420-220	**07420-0220**	D	23,2	36	31	7,5	11,6	20	117/71
07420-224	**07420-0224**	D	28	44	37	9,5	15	24	168/105
07420-230	**07420-0230**	D	35	56	49	12	18,9	30	269/191
07420-236	**07420-0236**	D	42	68	60	15	23,3	36	394/-
07420-242	**07420-0242**	D	49	78	70	18	28,3	42	542/-
07420-248	**07420-0248**	D	56	92	82	22	35,2	48	714/-
07420-256	-	D	65	103	92	25	39,7	56	960
07420-264	-	D	75	120	110	30	46,5	64	1269

Order No. high carbon steel	Order No. stainless steel	Form	D2	D4	D5	H3	H4 with conical seat	for screw Ø	Load rating max. kN (static load only)
07420-305	-	G	6	15	9,25	2,5	3,5	5	6,5
07420-306	**07420-0306**	G	7,1	17	11	4	5,2	6	9/6
07420-308	**07420-0308**	G	9,6	24	14,5	5	6,8	8	17/12
07420-310	**07420-0310**	G	12	30	18,5	5	7,1	10	26/16
07420-312	**07420-0312**	G	14,2	36	20	6	9	12	38/24
07420-314	-	G	16,5	40	24,8	6	8,6	14	53
07420-316	**07420-0316**	G	19	44	26	7	10,1	16	73/45
07420-320	**07420-0320**	G	23,2	50	31	8	12	20	117/71
07420-324	**07420-0324**	G	28	60	37	10	15,5	24	168/105
07420-330	**07420-0330**	G	35	68	49	12	18,7	30	269/191
07420-336	-	G	42	80	60	12	20,3	36	394

07460

Spherical levelling washers

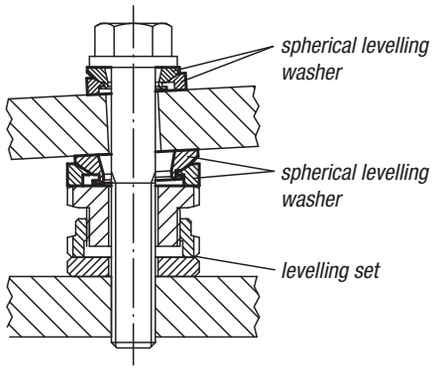

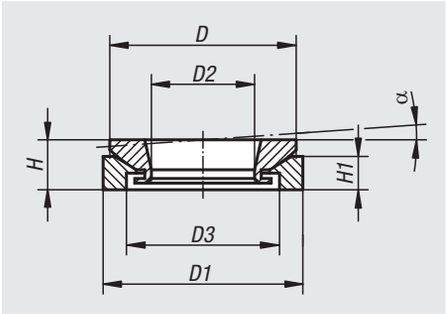

Material:
Steel 1.7225.
Stainless steel 1.4305.

Version:
Steel blue passivated.
Stainless steel, bright.

Sample order:
nlm 07460-401

Note:
Spherical levelling washers are for exact positioning when mounting up to 4° sloping surfaces. A second spherical levelling washer is recommended as support to correct the bolt angle if the angle of D3 is > 1°. The two washers cannot be detached from each other.

Order No. steel	Order No. stainless steel	H	H1	D	D1	D2	D3	α
07460-151	**07460-152**	8	5,5	23	25	8,5	15	4°
07460-201	**07460-202**	10	6,2	30	32	13	20	4°
07460-301	**07460-302**	12,5	9	40	45	20	30	4°
07460-401	**07460-402**	16	13	52	58	29	38	4°
07460-501	**07460-502**	20	14	65	70	36	48	4°

07520

C-washers captive

DIN 6371

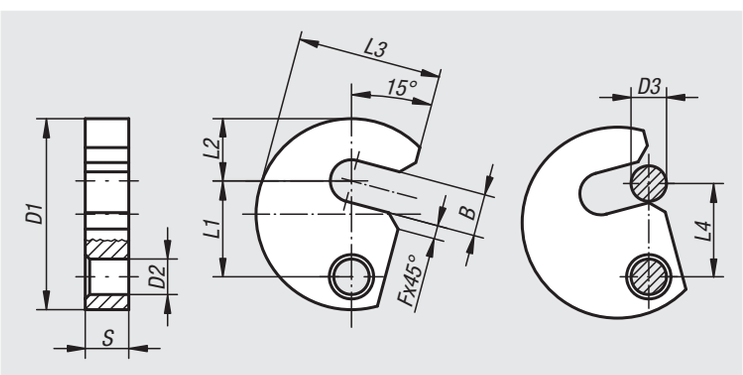

Material:
Carbon steel 1.0760.

Version:
Nitrided and black oxidised.

Sample order:
nlm 07520-12

Note:
07520-14 is not a DIN standard.
For suitable shoulder screws see 07530.

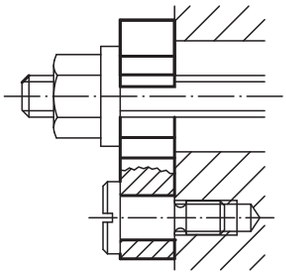

Order No.	B	D1	D2	D3	F	L1	L2	L3	L4	S
07520-06	7,5	38	9	6	3	19,6	11	29	19	9,8
07520-08	9,5	43	9	8	3	21,6	14	32,5	21	9,8
07520-10	11,5	48	9	10	3	23,6	17	36,5	23	9,8
07520-12	13,5	61	11	12	3	29,6	22	45	29	11,8
07520-14	15,5	65	11	14	3	31,6	23	49	31	11,8
07520-16	17,5	68	11	16	3	33,6	25	50	33	11,8
07520-20	21,5	74	11	20	4	36,6	28	55	36	11,8

Shim washers

DIN 988

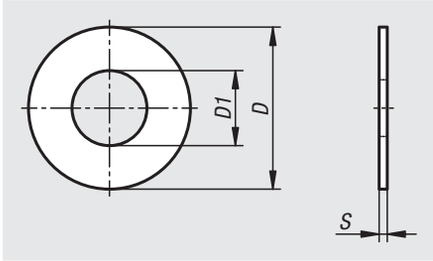

Material:
Steel.

Version:
Bright.

Sample order:
nlm 07305-0306010
(include dimension S e.g. 010 for S = 0,1 mm.)

Note:
With shim washers, an existing axial backlash can be significantly reduced. They are available with a thicknesses from 0.1 mm. Any thicknesses can made by combining several shim washers.

Order No.	Main material	D	D1	S
07522-0306* **	steel	6	3	0,1/0,15/0,2/0,25/0,3/0,5/1
07522-0408* **	steel	8	4	0,1/0,15/0,2/0,3/0,5/1
07522-0510* **	steel	10	5	0,1/0,15/0,2/0,25/0,3/0,5/1
07522-0612* **	steel	12	6	0,1/0,2/0,25/0,3/0,5/1
07522-0713* **	steel	13	7	0,1/0,2/0,3/0,5/1
07522-0814* **	steel	14	8	0,1/0,15/0,2/0,25/0,3/0,5/1
07522-0915* **	steel	15	9	0,1/0,15/0,2/0,3/0,5/1
07522-1016* **	steel	16	10	0,1/0,15/0,2/0,25/0,3/0,5/1
07522-1117* **	steel	17	11	0,1/0,2/0,25/0,3/0,5/1
07522-1218* **	steel	18	12	0,1/0,15/0,2/0,25/0,3/0,5/1
07522-1319* **	steel	19	13	0,1/0,15/0,2/0,25/0,3/0,5/1
07522-1420* **	steel	20	14	0,1/0,15/0,2/0,25/0,3/0,5/1
07522-1521* **	steel	21	15	0,1/0,15/0,2/0,25/0,3/0,5/1/1,2
07522-1622* **	steel	22	16	0,15/0,2/0,25/0,3/0,5/1/1,2
07522-1724* **	steel	24	17	0,1/0,15/0,2/0,25/0,3/0,5/1/1,2
07522-1825* **	steel	25	18	0,1/0,15/0,2/0,25/0,3/0,5/1/1,2
07522-1926* **	steel	26	19	0,1/0,15/0,2/0,25/0,3/0,5/1/1,2
07522-2028* **	steel	28	20	0,1/0,15/0,2/0,25/0,3/0,5/1/1,2/1,5
07522-2230* **	steel	30	22	0,1/0,15/0,2/0,25/0,3/0,5/1/1,2/1,5
07522-2535* **	steel	35	25	0,1/0,15/0,2/0,25/0,3/0,5/1/1,2/1,5
07522-2637* **	steel	37	26	0,1/0,15/0,2/0,25/0,3/0,5/1/1,2/1,5
07522-2840* **	steel	40	28	0,1/0,15/0,2/0,25/0,3/0,5/1/1,2/1,5
07522-3042* **	steel	42	30	0,1/0,15/0,2/0,25/0,3/0,5/1/1,2/1,5/2
07522-3245* **	steel	45	32	0,1/0,15/0,2/0,25/0,3/0,5/1/1,2/1,5/2
07522-3545* **	steel	45	35	0,1/0,15/0,2/0,25/0,3/0,5/1/1,2/1,5/2
07522-3645* **	steel	45	36	0,1/0,15/0,2/0,25/0,3/0,5/1/1,2/1,5/2
07522-3747* **	steel	47	37	0,1/0,15/0,2/0,25/0,3/0,5/1/1,2/1,5/2
07522-4050* **	steel	50	40	0,1/0,15/0,2/0,25/0,3/0,5/1/1,2/1,5/2
07522-4252* **	steel	52	42	0,1/0,15/0,2/0,25/0,3/0,5/1/1,2/1,5/2
07522-4555* **	steel	55	45	0,1/0,15/0,2/0,25/0,3/0,5/1/1,2/1,5/2
07522-4860* **	steel	60	48	0,1/0,15/0,2/0,25/0,3/0,5/1/1,2/1,5/2
07522-5062* **	steel	62	50	0,1/0,15/0,2/0,25/0,3/0,5/1/1,2/1,5/2

07523

Spacer washers ground

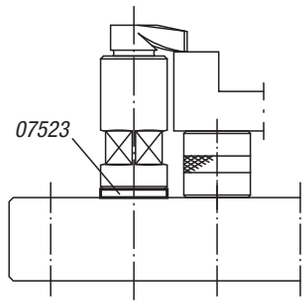

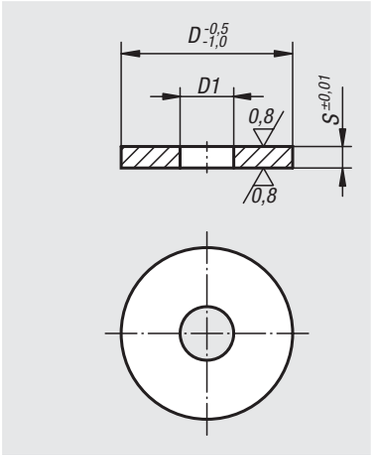

Material:
Carbon steel.

Version:
Tempered, black oxidised.
Contact faces ground.

Sample order:
nlm 07523-16005

Note:
The spacing washer is used to alter the clamping range of hook clamps and hook holders. When a spacing washer is inserted between the base and the hook holder or riser cylinder it prevents damage to the support face.

Order No.	D	D1	S
07523-12001	40	12,5	1
07523-12003	40	12,5	3
07523-12005	40	12,5	5
07523-16001	50	16,5	1
07523-16003	50	16,5	3
07523-16005	50	16,5	5
07523-16105	60	16,5	5

07530

Shoulder screws with slotted flat head

DIN 923

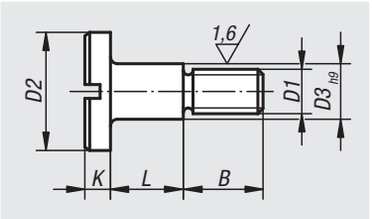

Material:
Steel.

Version:
Black oxidised, grade 5.8.

Sample order:
nlm 07530-08

Note:
For use with captive C-washers 07520.

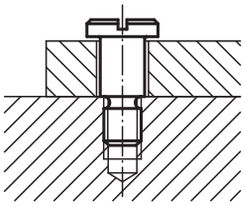

Order No.	D1	D2	D3	L	B	K
07530-06	M6	13	8	10 +0,15/+0,07	9	3,1
07530-08	M8	16	10	12 +0,2/+0,1	11	3,8
07530-10	M10	20	13	16 +0,2/+0,1	13,5	4,6

Shoulder screws Form B

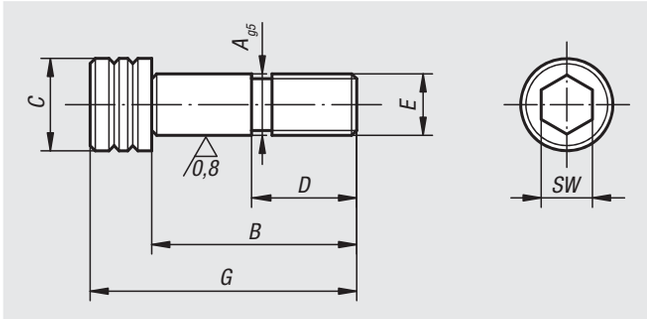

Material:
Carbon steel.

Version:
Tempered, black oxidised.
Precision diameters ground.

Sample order:
nlm 07533-12065

Order No.	A	B	C	D	E	G	SW
07533-12045	12	45	18	22	M12	57	10
07533-12055	12	55	18	22	M12	67	10
07533-12065	12	65	18	22	M12	77	10
07533-12075	12	75	18	22	M12	87	10
07533-16055	16	55	24	25	M16	71	14
07533-16065	16	65	24	25	M16	81	14
07533-16075	16	75	24	25	M16	91	14

Notes

Shoulder screws

similar to DIN ISO 7379

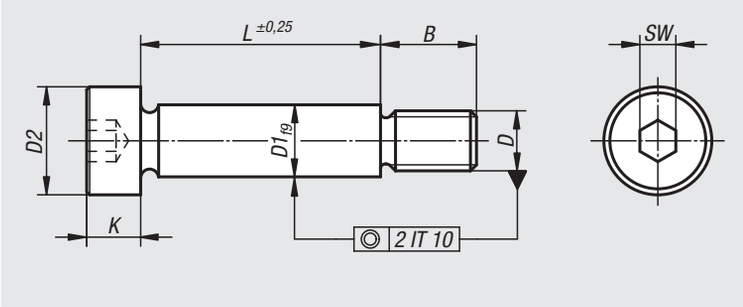

Material:
Steel or stainless steel (A 2)

Version:
Grade 12.9. Shaft OD ground and bright.
Bright stainless steel or tempered steel.

Sample order:
nlm 07534-06X20 (include length L)

Note:
Hexagon socket head shoulder screws are precision construction elements for many applications. As they can simplify complicated constructions, they are frequently chosen as the most cost-effective solution. Shoulder screws provide the decisive rationalising effect required today.

Order No.	Main material	D1	D	D2	B	K	SW	L
07534-04X	steel	4	M3	7	7	3	2	6/8/10/12/16/20
07534-05X	steel	5	M4	9	8	4	2,5	8/10/16/20/30/40
07534-06X	steel	6	M5	10	9,5	4,5	3	16/20/25/30/40/50/60
07534-08X	steel	8	M6	13	11	5,5	4	16/20/25/30/40/50/60
07534-10X	steel	10	M8	16	13	7	5	16/20/25/30/40/50/60/70/80
07534-12X	steel	12	M10	18	16	9	6	16/20/25/30/40/50/60/70/80/90/100
07534-16X	steel	16	M12	24	18	11	8	30/40/50/60/70/80/90/100/120
07534-20X	steel	20	M16	30	22	14	10	30/40/50/60/70/80/90/100/120
07534-104X	stainless steel	4	M3	7	7	3	2	6/8/10/16/20
07534-105X	stainless steel	5	M4	9	8	4	2,5	8/10/16/20/30/40
07534-106X	stainless steel	6	M5	10	9,5	4,5	3	16/20/25/30/40/50/60
07534-108X	stainless steel	8	M6	13	11	5,5	4	16/20/25/30/40/50/60
07534-110X	stainless steel	10	M8	16	13	7	5	16/20/25/30/40/50/60/70/80
07534-112X	stainless steel	12	M10	18	16	9	6	16/20/25/30/40/50/60/70/80/90/100
07534-116X	stainless steel	16	M12	24	18	11	8	30/40/50/60/70/80/90/100/120
07534-120X	stainless steel	20	M16	30	22	14	10	30/40/50/60/70/80/90/100/120

Shoulder screws

with hexagon head DIN 609

Material:
Steel.

Version:
Grade 8.8, black oxidised.
Shaft OD ground.

Sample order:
nlm 07535-09X40 (include length L)

Note:
Shoulder screws are used if the screw connection is subjected to transverse forces or if workpieces must be positioned relative to each other.

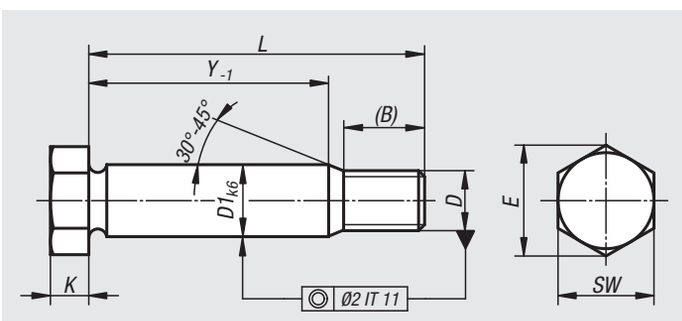

Order No.	D1	D	(B) reference dimension	E	K	SW	Y	L
07535-09X25	9	M8	14,5	14,38	5,3	13	8	25
07535-09X30	9	M8	14,5	14,38	5,3	13	13	30
07535-09X35	9	M8	14,5	14,38	5,3	13	18	35
07535-09X40	9	M8	14,5	14,38	5,3	13	23	40
07535-09X45	9	M8	14,5	14,38	5,3	13	28	45
07535-09X50	9	M8	14,5	14,38	5,3	13	33	50
07535-09X60	9	M8	16,5	14,38	5,3	13	41	60
07535-11X30	11	M10	17,5	17,77	6,4	17	10	30
07535-11X35	11	M10	17,5	17,77	6,4	17	15	35
07535-11X40	11	M10	17,5	17,77	6,4	17	20	40
07535-11X45	11	M10	17,5	17,77	6,4	17	25	45
07535-11X50	11	M10	17,5	17,77	6,4	17	30	50
07535-11X60	11	M10	19,5	17,77	6,4	17	38	60
07535-11X70	11	M10	19,5	17,77	6,4	17	48	70
07535-11X80	11	M10	19,5	17,77	6,4	17	58	80
07535-11X90	11	M10	19,5	17,77	6,4	17	68	90
07535-11X100	11	M10	19,5	17,77	6,4	17	78	100
07535-13X35	13	M12	20,5	19,85	7,5	19	11,5	35
07535-13X40	13	M12	20,5	19,85	7,5	19	16,5	40
07535-13X45	13	M12	20,5	19,85	7,5	19	21,5	45
07535-13X50	13	M12	20,5	19,85	7,5	19	26,5	50
07535-13X60	13	M12	22,5	19,85	7,5	19	34,5	60
07535-13X70	13	M12	22,5	19,85	7,5	19	44,5	70
07535-13X80	13	M12	22,5	19,85	7,5	19	54,5	80
07535-13X90	13	M12	22,5	19,85	7,5	19	64,5	90
07535-13X100	13	M12	22,5	19,85	7,5	19	74,5	100
07535-17X40	17	M16	25	26,17	10	24	11,5	40
07535-17X45	17	M16	25	26,17	10	24	16,5	45
07535-17X50	17	M16	25	26,17	10	24	21,5	50
07535-17X60	17	M16	27	26,17	10	24	29,5	60
07535-17X70	17	M16	27	26,17	10	24	39,5	70
07535-17X80	17	M16	27	26,17	10	24	49,5	80
07535-17X90	17	M16	27	26,17	10	24	59,5	90
07535-17X100	17	M16	27	26,17	10	24	69,5	100
07535-21X50	21	M20	28,5	32,95	12,5	30	17,5	50
07535-21X60	21	M20	30,5	32,95	12,5	30	25,5	60
07535-21X70	21	M20	30,5	32,95	12,5	30	35,5	70
07535-21X80	21	M20	30,5	32,95	12,5	30	45,5	80
07535-21X90	21	M20	30,5	32,95	12,5	30	55,5	90
07535-21X100	21	M20	30,5	32,95	12,5	30	65,5	100
07535-21X120	21	M20	30,5	32,95	12,5	30	85,5	120
07535-25X60	25	M24	36,5	39,35	15	36	19	60
07535-25X70	25	M24	36,5	39,35	15	36	29	70
07535-25X80	25	M24	36,5	39,35	15	36	39	80
07535-25X90	25	M24	36,5	39,35	15	36	49	90
07535-25X100	25	M24	36,5	39,35	15	36	59	100
07535-25X120	25	M24	36,5	39,35	15	36	79	120

07540

Shoulder screws

with slotted domed head

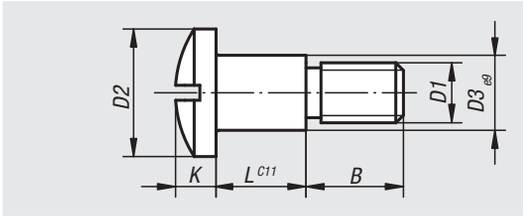

Material:
Carbon steel.

Version:
Black oxidised.

Sample order:
nlm 07540-10

Order No.	D1	D2	D3	L	B	K
07540-06	M6	14	8	10,2	9,8	6
07540-08	M8	18	10	12,2	11,8	7
07540-10	M10	22	12	14,2	14,8	9
07540-12	M12	22	14	16,2	15,8	9

07560

Snapper catch with spring

DIN 6310

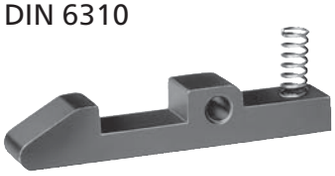

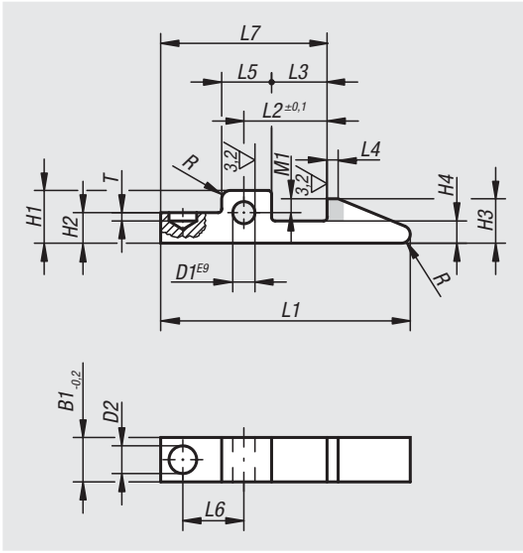

Material:
Carbon steel 1.2067

Version:
Black oxidised, snapper nose hardened (see grey region).

Sample order:
nlm 07560-02

Note:
The spring is supplied.
Spring dimensions:
Ø 4.8 x 14
Ø 5.8 x 17
Ø 7.3 x 21

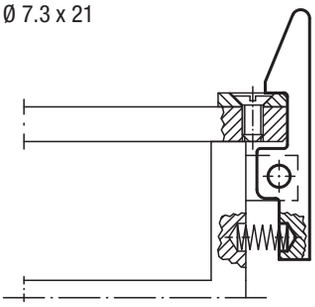

Order No.	L1	B1	D1	D2	H1	H2	H3	H4	L2	L3	L4	L5	L6	L7	M1	T	R
07560-01	45	8	4	5	9,5	5,5	8	4	15	10	2	9	11	30	2,5	1,5	1,6
07560-02	60	10	5	6,3	12	7	10	5	20	14	3	11	15	40	3	3	2,5
07560-03	80	14	6	8	15	9	14	7	30	22	5	14	23	60	5	5	4

Quarter-turn screws

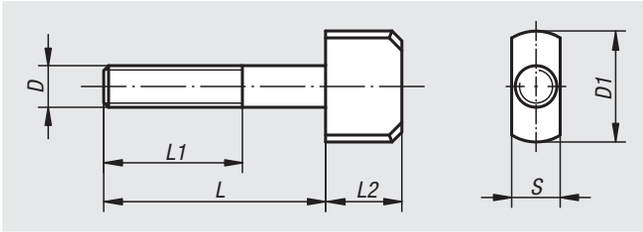

Material:
Carbon steel 1.1191

Version:
Tempered to 8.8 and black oxidised.

Sample order:
nlm 07570-10

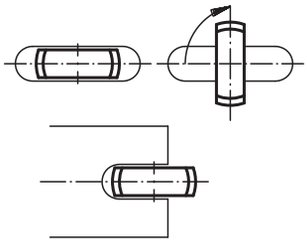

Order No.	D	D1	L	L1	L2	S
07570-06	M6	20	30	25	14	6,5
07570-08	M8	25	40	30	16	8,5
07570-10	M10	28	50	40	16	10,5
07570-12	M12	32	60	50	20	12,5

Slotted round nuts

DIN 1804

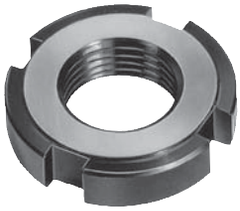

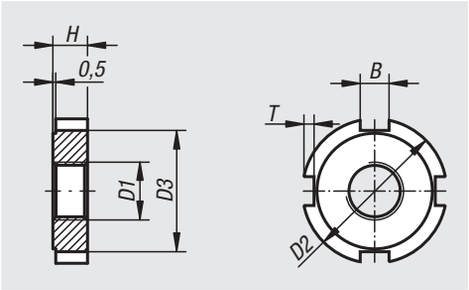

Material:
Steel.

Version:
Form W = black oxidised.
Form H = hardened and ground both sides.

Sample order:
nlm 07590-120

Note:
Form H is case hardened, apart from the thread.

Order No. Form W	Order No. Form H	D1	D2	D3	H	B	T
07590-110	**07590-210**	M10x1	25	20	6	5	2
07590-112	**07590-212**	M12x1,5	28	23	6	5	2
07590-114	**07590-214**	M14x1,5	30	25	7	5	2
07590-116	**07590-216**	M16x1,5	32	27	7	5	2
07590-118	**07590-218**	M18x1,5	34	28	8	6	2,5
07590-120	**07590-220**	M20x1,5	36	30	8	6	2,5
07590-122	**07590-222**	M22x1,5	40	34	9	6	2,5
07590-124	**07590-224**	M24x1,5	42	36	9	6	2,5
07590-126	**07590-226**	M26x1,5	45	38	10	7	3
07590-128	**07590-228**	M28x1,5	50	43	10	7	3
07590-130	**07590-230**	M30x1,5	50	43	10	7	3
07590-132	**07590-232**	M32x1,5	52	45	11	7	3
07590-135	**07590-235**	M35x1,5	55	48	11	7	3
07590-138	**07590-238**	M38x1,5	58	50	11	8	3,5
07590-140	**07590-240**	M40x1,5	62	54	12	8	3,5
07590-142	**07590-242**	M42x1,5	62	54	12	8	3,5

Slotted nuts

with elastic lock

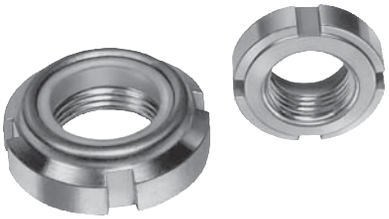

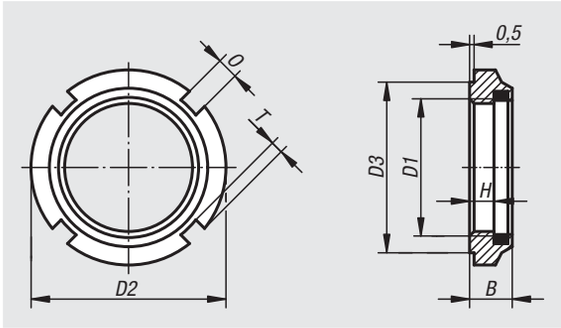

Material:
Free-cutting steel.
Elastic ring polyamide (max. 100 °C).

Version:
galvanized.

Sample order:
nlm 07595-24

Note:
Elastic lock slotted nuts have enormous cost advantages. They do not need lock washers with folding tabs and so the expensive milling of a slot is not required.
The polyamide ring is resistant to petrol and oil.
Elastic lock slotted nuts can be used several times. They withstand the strongest vibrations and oscillations irrespective of the tightening torque and are therefore useful as adjustment nuts.

Order No.	D1	D2	D3	H min.	B max.	T	O
07595-10	M10x1	18	15	4,4	7,6	1,5	3
07595-12	M12x1,5	21	18	5,7	9,2	1,5	3
07595-14	M14x1,5	24	21	6	10,7	1,5	4
07595-16	M16x1,5	28	24	6	10,7	2	4
07595-18	M18x1,5	28	24	7,3	10,7	2	4
07595-20	M20x1,5	32	27	6	9,6	2,5	4
07595-22	M22x1,5	38	33	7	12,7	2,5	5
07595-24	M24x1,5	38	33	6,2	10,7	2,5	5
07595-28	M28x1,5	44	38	6,9	11,2	3	5
07595-30	M30x1,5	44	38	6,5	11	3	5
07595-32	M32x1,5	50	44	6,6	11,2	3	5
07595-35	M35x1,5	50	44	7	11	3	5
07595-38	M38x1,5	53	47	6,6	12,2	3	5
07595-40	M40x1,5	56	50	7	12	3	6
07595-42	M42x1,5	62	55	10,6	15,2	3,5	6

Technical information for adjustment nuts

Assembly:

1. Carefully clean the adjustment nut and connection points and lightly oil with a film of standard machine oil without anti-friction additives.
2. Screw the adjustment nut onto the spindle thread but not quite up to the contact face (Fig. 1).
3. Tighten the screws uniformly and crosswise while turning the adjustment nut back and forth until it turns with almost no backlash on the thread (Fig. 2).
4. Now tighten the adjustment nut with a higher than specified torque (ca. +30%) against the contact face, then loosen again and finally tighten with specified torque (Fig. 3). This prevents the need to re-adjust later.
5. Now secure the adjustment nut by uniformly tightening the screws. Highest demands of spindle concentricity can be positively influenced by testing and individually tightening the screws. Possible stresses caused by small lateral run-out errors can be corrected.

Disassembly:

Slightly loosen all the screws crosswise. Now fully loosen all the screws. This prevents the last screw being subjected to the full stress of the membrane and being blocked.

If an adjustment nut has been secured on a spindle thread, after dismantling it can only be used again on the same spindle. The adaption procedure between spindle and adjustment nut can lead to problems when attempting to fit the nut to another.

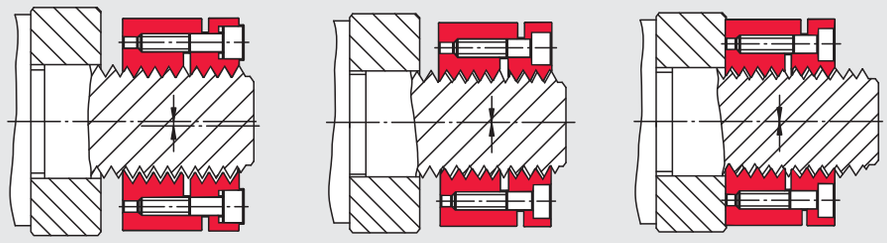

Fig. 1 Fig. 2 Fig. 3

Setting an axial pre-tension load:

The axial pre-tension of a screw connection is often function critical and therefore must be set accurately. Measuring this value directly during assembly is mostly not possible making an indirect setting necessary. The tightening load for the adjustment screw pre-tension torque must be calculated.

This can be determined by the following formula:

$$M_v = \frac{(F_v + V) \cdot (U + \mu A \cdot rA)}{1000} \quad [Nm]$$

M_v = Pre-tension torque of the adjustment nut (Nm)
F_v = Required axial pre-tension force of the screw connection (N)
V = Adjustment nut specific supplement (N), compensates the face load alleviation by the securing process
U = Constant (mm), includes the calculation factor for the respective thread (see table)
μA = Coefficient of friction for the locating face of the adjustment nut. Approximate value μA = 0.1 (steel/steel)
rA = Operative frictional radius for the locating face of the adjustment nut (mm)

The securing procedure subjects the spindle thread to stress and produces an intensive flank pressure (= high axial rigidity). This effect simultaniously relieves the contace face of the adjusment nut, which can be easily counterbalanced by correspondingly higher pre-tension torque during assembly. This higher pre-tension torque is calculated by allowance V to the required pre-tension force F_v.

Order No.	Calculation factor U (mm)	Adjustment nut specific supplement V (N)
07598-024101015	0,703	2,457
07598-026121515	0,881	2,438
07598-032141516	0,997	2,995
07598-034161518	1,112	3,962
07598-036181518	1,228	3,931
07598-040201518	1,344	3,900
07598-040221518	1,459	3,869
07598-042241518	1,575	3,838
07598-045261520	1,690	3,806
07598-046281520	1,805	3,775
07598-048301520	1,921	3,744
07598-050321522	2,037	3,713
07598-053351522	2,210	3,666

Adjustment nuts

Material:
Steel.
Clamping screws carbon steel.

Version:
Black oxidised.
Clamping screws ISO 4762, grade 12.9.

Sample order:
nlm 07598-024101015

Note:
Two screw parts that are elastically connected are tightened against each other with screws.
The adjustment nut is constructed rotationally symmetric. There are no unbalancing keyways or slots.

Attention:
The adjustment nut can be axially deformed and must be handled with care. The clamping screws may only be tightened when the adjustment nut is completely screwed onto the spindle thread, otherwise the adjustment nut could become defective through unacceptable plastic deformation.

M10 x 1 - M14 x 1,5

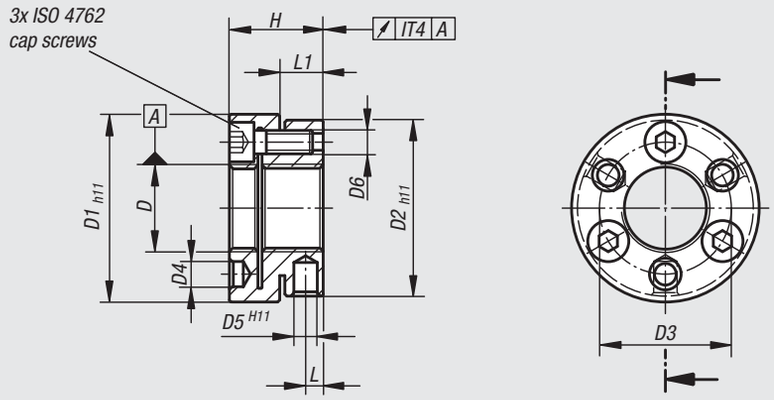

from M16 x 1,5

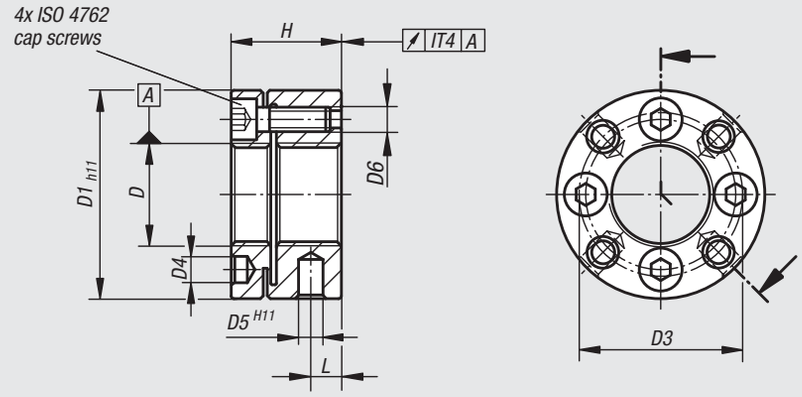

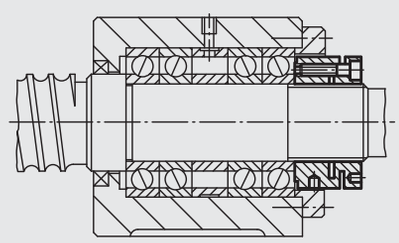

Example:
The bearing of the ball bearing spindle gains high axial rigidity due to the assembly with an adjusting nut. During highly dynamic operation the high security factor of the adjusting nut is also very advantageous.

Order No.	D	D1	D2	D3	D4	D5	D6	H	L	L1	Tightening torque of screws Nm	Max. static axial pressure stress N	Max. dynamic axial pressure stress N	Inertia (gcm²)
07598-024101015	M10x1	24	22	17	3,2	2,5	M3	15	3	6,5	2	15000	12000	27
07598-026121515	M12x1,5	26	25	19	3,2	3	M3	15	3	6,5	2	18000	13000	40
07598-032141516	M14x1,5	32	30	22,5	4,3	4	M4	16	3	7	2,9	22000	17000	96
07598-034161518	M16x1,5	34	-	24,5	4,3	4	M4	18	5	-	2,9	22000	17000	147
07598-036181518	M18x1,5	36	-	26,5	4,3	4	M4	18	5	-	2,9	25000	19000	183
07598-040201518	M20x1,5	40	-	30,5	4,3	4	M4	18	5	-	2,9	28000	18000	283
07598-040221518	M22x1,5	40	-	30,5	4,3	4	M4	18	5	-	2,9	32000	23000	270
07598-042241518	M24x1,5	42	-	32,5	4,3	4	M4	18	5	-	2,9	35000	25000	323
07598-045261520	M26x1,5	45	-	36,5	4,3	5	M4	20	6,5	-	2,9	49000	34000	479
07598-046281520	M28x1,5	46	-	38,5	4,3	5	M4	20	6,5	-	2,9	53000	36000	504
07598-048301520	M30x1,5	48	-	40,5	4,3	5	M4	20	6,5	-	2,9	57000	38000	588
07598-050321522	M32x1,5	50	-	42,5	4,3	5	M4	22	7	-	2,9	64000	44000	743
07598-053351522	M35x1,5	53	-	45,5	4,3	5	M4	22	7	-	2,9	66000	47000	914

07620

Clevis

with external thread

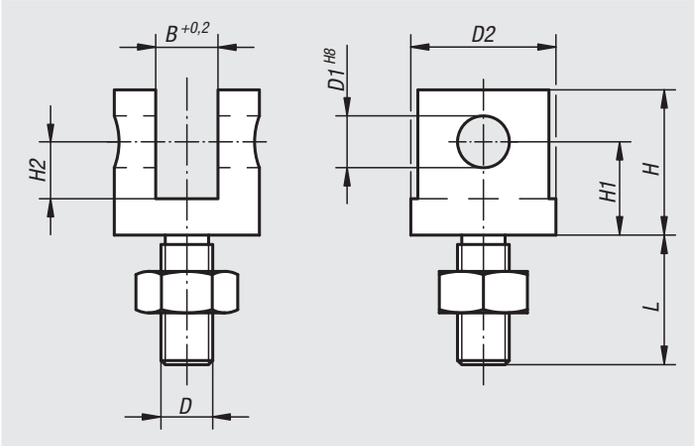

Material:
Carbon steel 1.1191

Version:
Tempered and black oxidised.

Sample order:
nlm 07620-05

Note:
Suitable clevis pin see 04250.

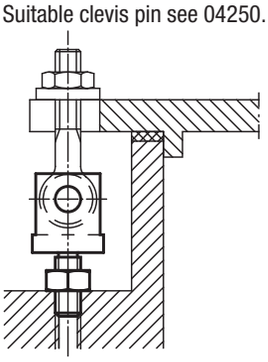

Order No.	D	D1	D2	B	H	H1	H2	L
07620-05	M5	5	12	6	16	10	7	14,5
07620-06	M6	6	16	7	19	12	8	15
07620-08	M8	8	20	9	23	15	10	20
07620-10	M10	10	28	12	28	18	11	25
07620-12	M12	12	30	14	34	21	13,5	30
07620-14	M14	14	36	16	37	23	15	35
07620-16	M16	16	40	17	42	26	17	40
07620-20	M20	18	50	22	52	32	21	50

07630

Grub screws

DIN 551

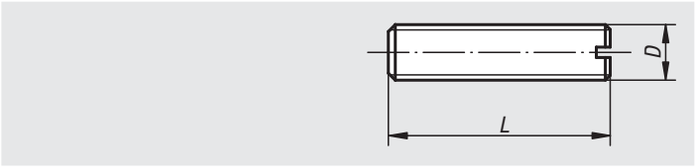

Material:
Steel.

Version:
Bright, grade 5.8.

Sample order:
nlm 07630-10X40 (include length L)

Note:
A solid joint between grub screw and counter-piece can often be made more cost-effectivelly by gluing it.
The LOCTITE products are especially suitable for this. See 97990.

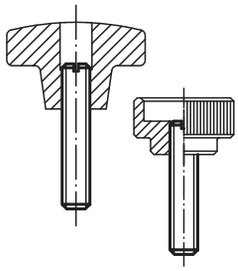

Order No.	D	L
07630-06X	M6	20/25/30/35/40/45/50/60/70
07630-08X	M8	25/30/35/40/45/50/60/70/80
07630-10X	M10	25/30/35/40/45/50/60/70/80
07630-12X	M12	30/35/40/45/50/60/70/80/100
07630-16X	M16	30/35/40/45/50/60/70/80/100
07630-20X	M20	40/50/60/70/80/90/100

Threaded rods

steel and stainless steel DIN 976-1

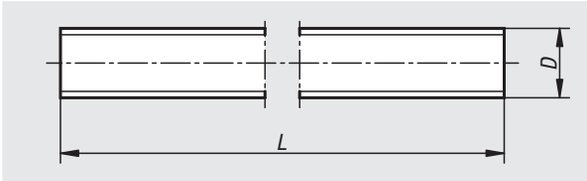

Material:
Carbon steel or stainless steel.

Version:
Tempered to 8.8.

Sample order:
nlm 07640-16

Note:
Threaded rods are only available in 1000 mm lengths.

Order No. high carbon steel	Order No. stainless steel	D	L
07640-05	**07640-052**	M5	1000
07640-06	**07640-062**	M6	1000
07640-08	**07640-082**	M8	1000
07640-10	**07640-102**	M10	1000
07640-12	**07640-122**	M12	1000
07640-14	-	M14	1000
07640-16	**07640-162**	M16	1000
07640-18	**07640-182**	M18	1000
07640-20	**07640-202**	M20	1000
07640-22	**07640-222**	M22	1000
07640-24	**07640-242**	M24	1000

Springs

for clamp straps

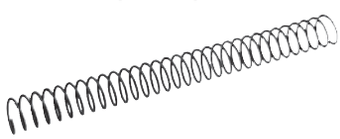

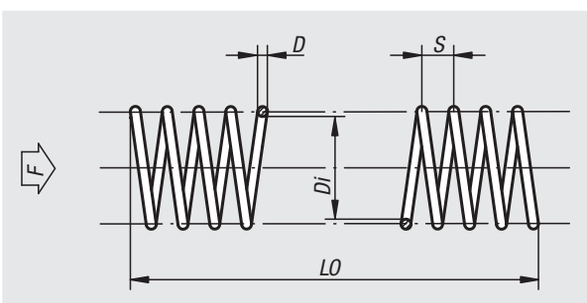

Material:
Spring steel 1.5026

Sample order:
nlm 07650-12

Note:
Springs are only available in 400 mm lengths.

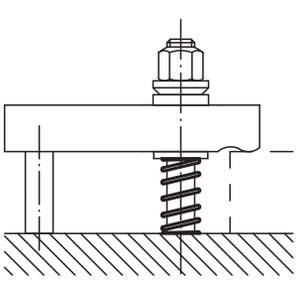

Order No.	D	Di	LO	S	Spring force F approx. N	Compression factor under f
07650-06	1	6,5	400	3	32	1,3
07650-08	1	8,5	400	4	25	2,1
07650-10	1,2	10,5	400	4	35	2,7
07650-12	1,4	12,5	400	5	47	3,3
07650-14	1,5	14,5	400	6	50	4
07650-16	1,6	16,5	400	7	53	4,8
07650-18	1,8	18,5	400	7	68	5,4
07650-20	1,8	20,5	400	8	62	6,5
07650-24	2	25	400	9	70	8,6

HeliCoil®plus threaded inserts

Material:
Rust and acid-resistant chrome-nickel alloy 1.4301

Version:
Bright.

Sample order:
nlm 07645-01 (assortment box)

Note:
HeliCoil®plus threaded inserts are an indispensable aid to any metalworking business and restoration shop.
Threaded holes that are torn out, rusted solid or have been drilled too big, can have their original internal thread diameter restored in minutes. Technically perfect and lasting for an unlimited time, they are also corrosion and heat-resistant. Expensive products can be repaired and saved from the scrap bin.
The high surface quality guarantees optimal yield strength and high pre-stress of high tensile bolts. HeliCoil®plus threaded inserts are also ideally for transmission threads in all light alloys and cast parts. Instructions for installation and thread are enclosed. Additional dimensions and installation tools available on request.

Assortment Box
Assortment box consisting of M5 to M12 threaded inserts, each in three different thread lengths, spiral drills (only for M5 - M10 inserts), special hand taps, spindle inserts and pin breakers.

Repair Kits
Consisting of one size of threaded inserts, each in three different thread lengths, spiral drills, special hand taps, spindle inserts and pin breakers.

assortment box

repair kits

spare threaded inserts, loose

Order No.	Version	Thread sizes in set	No. off inserts	Insert length assembled mm
07645-01	Assortment box	M5	10	5 / 7,5 / 10
		M6		6 / 9 / 12
		M8		8 / 12 / 16
		M10		10 / 15 / 20
		M12		12 / 18 / 24

Order No.	Version	Threaded Inserts	No. off inserts	Insert length assembled mm
07645-0523	Repair set	M5	20 of each	5 / 7,5 / 10
07645-0623	Repair set	M6	20 of each	6 / 9 / 12
07645-0823	Repair set	M8	10 of each	8 / 12 / 16
07645-1023	Repair set	M10	10 of each	10 / 15 / 20
07645-1223	Repair set	M12	10 of each	12 / 18 / 24

Order No.	Version	Threaded Inserts	Insert length assembled mm
07645-0521	Spare inserts	M5	5
07645-0531	Spare inserts	M5	7,5
07645-0541	Spare inserts	M5	10
07645-0621	Spare inserts	M6	6
07645-0631	Spare inserts	M6	9
07645-0641	Spare inserts	M6	12
07645-0821	Spare inserts	M8	8
07645-0831	Spare inserts	M8	12
07645-0841	Spare inserts	M8	16
07645-1021	Spare inserts	M10	10
07645-1031	Spare inserts	M10	15
07645-1041	Spare inserts	M10	20
07645-1221	Spare inserts	M12	12
07645-1231	Spare inserts	M12	18
07645-1241	Spare inserts	M12	24

before

after

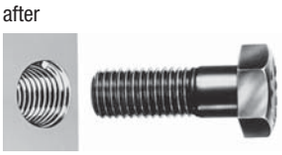

Self-tapping thread inserts

installation information

Installing by hand

1. Drilling

Drill out the old hole with a core drill. If necessary, countersink the hole. By hard and tough materials the thread must be pre-tapped (max. intermediate tap).

2. Screw threaded insert onto the intallation tool

Screw the thread insert onto the installation tool with the slot or hole downwards and lock in place with the locknut using a spanner.

3. Screw in the thread insert

Screw in thread insert into the hole. The thread insert cuts its own thread. The intsallation tool has a ¼“ hexagon spigot and can be driven by a cordless driver, ratchet and socket etc.

4. Screw out the installation tool

Loosen the lock nuts with a spanner and screw the installation tool out. With the thread insert the thread is now more wear resistant, more durable and vibration resistant than the original thread.

Installation on a machine

1. Drilling

Drill out the old hole with a core drill. If necessary countersink the borehole. By hard and tough materials the thread must be pre-tapped (max. intermediate tap).

2. Machine settings and positioning

Position the workpiece under the machine. Set the machine to the screw in depth. Turn the outer sleeve so that the stop pin makes contact and carries the sleeve when screwing in begins. Screw the threaded insert 2 to 4 turns onto the threaded pin.

3. Screw in the thread insert

Allow the machine to run until the threaded insert is screwed into the workpiece. Introduce the tool gently to the workpiecedown to prevent damaging or breaking the thread insert or the installation tool.

4. Screw the tool out

Set the machine into reverse. The outer sleeve is carried by the stop pin and counters the thread insert.

Recommended drilling diameter

		Threaded inserts with cutting slot case-hardened steel, galvanized, yellow-chromated				**Threaded inserts with cutting holes** case-hardened steel, galvanized, yellow-chromated			
Materials	Light metal alloys tensile strength [N/mm²]	< 250 N/mm²							
		< 300 N/mm²				< 300 N/mm²			
			< 350 N/mm²				< 350 N/mm²		
				> 350 N/mm²				> 350 N/mm²	
	Brass, non-ferrous metals, bronze			> 350 N/mm²				> 350 N/mm²	
	Cast iron Brinell hardness [HB]	< 150 HB				< 150 HB			
			< 200 HB				< 200 HB		
				> 200 HB				> 200 HB	
Internal thread D	**M3 x 0,5**	-	4,6 mm	4,7 mm	4,8 mm	4,6 mm	4,7 mm		4,8 mm
	M4 x 0,7	5,9 mm	6,0 mm	6,1 mm	6,2 mm	6,0 mm	6,1 mm		6,2 mm
	M5 x 0,8	7,2 mm	7,3 mm	7,5 mm	7,6 mm	7,4 mm	7,5 mm	7,6 mm	7,7 mm
	M6 x 1,0	8,8 mm	9,0 mm	9,2 mm	9,4 mm	9,3 mm	9,4 mm	9,5 mm	9,6 mm
	M8 x 1,25	10,8 mm	11,0 mm	11,2 mm	11,4 mm	11,1 mm	11,2 mm	11,3 mm	11,5 mm
	M10 x 1,5	12,8 mm	13,0 mm	13,2 mm	13,4 mm	13,1 mm	13,2 mm	13,3 mm	13,5 mm
	M12 x 1,75	14,8 mm	15,0 mm	15,2 mm	15,4 mm	15,0 mm	15,1 mm	15,2 mm	15,4 mm
	M16 x 2,0	18,8 mm	19,0 mm	19,2 mm	19,4 mm	19,0 mm	19,1 mm	19,2 mm	19,4 mm
	Flank coverage	ca. 60%	ca. 50%	ca. 40%	ca. 30%	ca. 80%	ca. 70%	ca. 60%	ca. 50%
		Lubrication may be required				Lubrication may be required			

Threaded inserts self-tapping

with cutting slot

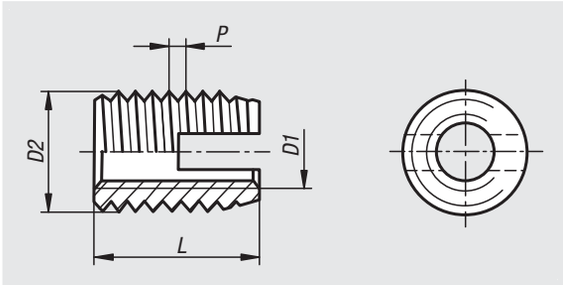

Material:
Steel or 1.4305 stainless steel

Version:
Steel case hardened, galvanised.
Stainless steel bright.

Sample order:
nlm 07652-03

Note:
Self-tapping threaded inserts for making high-strength, wear-free, vibration resistant screw connections in materials with low shear strength such as aluminium and aluminium alloys, brass, bronze, cast iron, duro and thermoplastics.

The threaded inserts are tapered at the bottom and have a cutting slot. By screwing in they cut their own threads inside a receiver hole. This guarantees a completely secure and firm anchoring in the host material.

Internal thread D1 acc. to ISO 6H.

The threaded inserts with cutting slot spring slightly inwards in the slot region in some materials. This results in a screw locking effect. If this is not desired, we recommend the threaded inserts with a cutting bore.

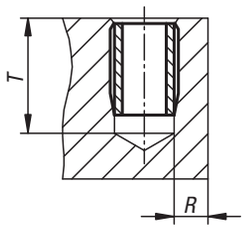

Order No.	Main material	D1	D2	P	L	T min.	R min. light metal	R min. cast iron	R min. plastics	Order No. Hand ass. tool	Order No. M/C ass. tool
07652-03	steel	M3	5	0,5	6	8	1	1,5	1,25	07652-803	07652-903
07652-04	steel	M4	6,5	0,75	8	10	1,3	1,95	1,6	07652-804	07652-904
07652-05	steel	M5	8	1	10	13	1,6	2,4	2	07652-805	07652-905
07652-06	steel	M6	10	1,5	14	17	2	3	2,5	07652-806	07652-906
07652-08	steel	M8	12	1,5	15	18	2,4	3,6	3	07652-808	07652-908
07652-10	steel	M10	14	1,5	18	22	2,8	4,2	3,5	07652-810	07652-910
07652-12	steel	M12	16	1,5	22	26	3,2	4,8	4	07652-812	07652-912
07652-16	steel	M16	20	1,5	22	27	4	6	5	-	07652-916
07652-103	stainless steel	M3	5	0,5	6	8	1	1,5	1,25	07652-803	07652-903
07652-104	stainless steel	M4	6,5	0,75	8	10	1,3	1,95	1,6	07652-804	07652-904
07652-105	stainless steel	M5	8	1	10	13	1,6	2,4	2	07652-805	07652-905
07652-106	stainless steel	M6	10	1,5	14	17	2	3	2,5	07652-806	07652-906
07652-108	stainless steel	M8	12	1,5	15	18	2,4	3,6	3	07652-808	07652-908
07652-110	stainless steel	M10	14	1,5	18	22	2,8	4,2	3,5	07652-810	07652-910
07652-112	stainless steel	M12	16	1,5	22	26	3,2	4,8	4	07652-812	07652-912
07652-116	stainless steel	M16	20	1,5	22	27	4	6	5	-	07652-916

Assembly tools

for self-tapping threaded inserts

Material:
Steel.

Version:
Hand assembly tool, galvanized.
Machine assembly tool, black oxidised.

Sample order:
nlm 07652-803

Note:
The turning in by hand is carried out with the manual assembly tool and a cordless screwdriver, ratchet, socket etc. Machine assembly is carried out with the machine assembly tool preferably on a thread-cutting machine.

Hand assembly tool

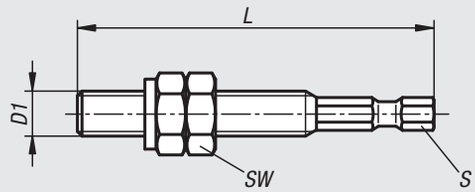

Machine assembly tool

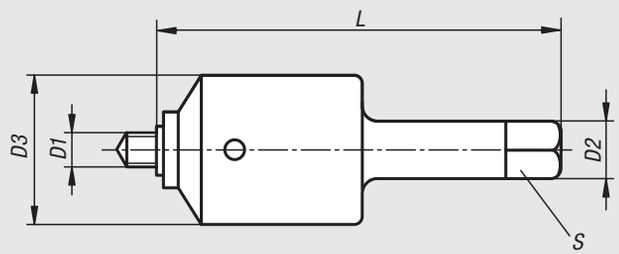

Order No.	Version	D1	D2	D3	L	S	SW	Insertion torque ref. values Nm	RPM ref. values for light metal
07652-803	hand assembly tool	M3	-	-	46	1/4	5,5	2,5	-
07652-804	hand assembly tool	M4	-	-	48	1/4	7	5,5	-
07652-805	hand assembly tool	M5	-	-	57	1/4	8	10	-
07652-806	hand assembly tool	M6	-	-	62	1/4	10	15	-
07652-808	hand assembly tool	M8	-	-	72	1/4	13	28	-
07652-810	hand assembly tool	M10	-	-	82	1/4	17	40	-
07652-812	hand assembly tool	M12	-	-	92	1/4	19	60	-
07652-903	machine assembly tool	M3	8	18	80	6	-	2,5	650 - 900
07652-904	machine assembly tool	M4	8	18	80	6	-	5,5	400 - 600
07652-905	machine assembly tool	M5	12,5	30	96,5	10	-	10	400 - 600
07652-906	machine assembly tool	M6	12,5	30	96,5	10	-	15	280 - 400
07652-908	machine assembly tool	M8	12,5	30	96,5	10	-	28	280 - 400
07652-910	machine assembly tool	M10	13	40	110	10	-	40	200 - 300
07652-912	machine assembly tool	M12	13	40	110	10	-	60	200 - 300
07652-916	machine assembly tool	M16	13	40	110	10	-	160	150 - 200

Threaded inserts self-tapping

with cutting bores

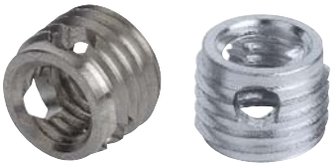

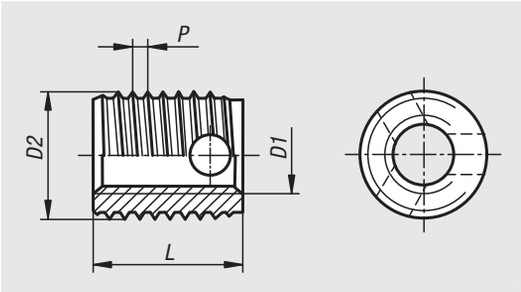

Material:
Steel or 1.4305 stainless steel

Version:
Steel case hardened, galvanised.
Stainless steel bright.

Sample order:
nlm 07653-03

Note:
Self-tapping threaded inserts for making high-strength, wear-free, vibration resistant screw connections in materials with low shear strength such as aluminium and aluminium alloys, brass, bronze, cast iron, duro and thermoplastics.

The threaded inserts are tapered at the bottom and have three cutting bores. They cut their own threads inside a receiver hole. This guarantees a completely secure and firm anchoring in the host material.

Internal thread D1 acc. to ISO 6H.

The threaded inserts with cutting bores are designed especially for materials difficult to machine. Due to the thicker wall, it can withstand greater force during cutting, which is also distributed over three cutting bores.

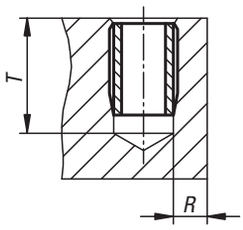

Order No.	Main material	D1	D2	P	L	T min.	R min. light metal	R min. cast iron	R min. plastics	Order No. Hand ass. tool	Order No. M/C ass. tool
07653-03	steel	M3	5	0,6	4	6	1	1,5	1,25	07652-803	07652-903
07653-04	steel	M4	6,5	0,8	6	8	1,3	1,95	1,6	07652-804	07652-904
07653-05	steel	M5	8	1	7	9	1,6	2,4	2	07652-805	07652-905
07653-06	steel	M6	10	1,25	8	10	2	3	2,5	07652-806	07652-906
07653-08	steel	M8	12	1,5	9	11	2,4	3,6	3	07652-808	07652-908
07653-10	steel	M10	14	1,5	10	13	2,8	4,2	3,5	07652-810	07652-910
07653-12	steel	M12	16	1,75	12	15	3,2	4,8	4	07652-812	07652-912
07653-103	stainless steel	M3	5	0,6	4	6	1	1,5	1,25	07652-803	07652-903
07653-104	stainless steel	M4	6,5	0,8	6	8	1,3	1,95	1,6	07652-804	07652-904
07653-105	stainless steel	M5	8	1	7	9	1,6	2,4	2	07652-805	07652-905
07653-106	stainless steel	M6	10	1,25	8	10	2	3	2,5	07652-806	07652-906
07653-108	stainless steel	M8	12	1,5	9	11	2,4	3,6	3	07652-808	07652-908
07653-110	stainless steel	M10	14	1,5	10	13	2,8	4,2	3,5	07652-810	07652-910
07653-112	stainless steel	M12	16	1,75	12	15	3,2	4,8	4	07652-812	07652-912

Threaded inserts

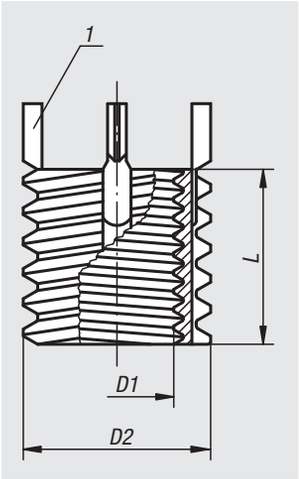

Material:
Steel or stainless steel

Version:
Passivated.

Sample order:
nlm 07660-12 threaded insert
nlm 07660-812 assembly tool

Note:
Threaded inserts allow threaded holes which have been damaged, torn out or jammed to be used again or to be repaired. This makes it possible to recover scrap and rejects of expensive products. Threaded inserts are suitable for use in various materials, including light metals and casting. Inserts with internal threads larger than M6 are supplied with four locking pins instead of two. Permissible deviations:
The medium tolerance class applies to the threads listed, i.e. 6H for nut threads and 6g for bolt threads. Other dimensions ±0.25 mm.

Technical information see operating instructions for threaded inserts.

Advantages:
- Quick and easy installation.
- The insert is fixed with pins in order to prevent torsion due to twisting or vibrations.
- No other special tools are required besides the assembly tool.

Drawing reference:
1) locking pin

Order No. steel	Order No. stainless steel	D1 internal thread	D2 external thread	L length	Core drill Ø	Counter-sink Ø +0.25	Tap size	Min. thread depth	Removal drill Ø	Removal drilling depth	Order No. assembly tools
07660-05	**07660-105**	M5	M8	8	6,9	8,3	M8	9,5	5,5	4	07660-805
07660-06	**07660-106**	M6	M10x1,25	10	8,8	10,3	M10x1,25	11,5	7,5	4,8	07660-806
07660-08	**07660-108**	M8	M12x1,25	12	10,8	12,3	M12x1,25	13,5	9,5	4,8	07660-808
07660-08X1	**07660-108X1**	M8x1	M12x1,25	12	10,8	12,3	M12x1,25	13,5	9,5	4,8	07660-808
07660-10	**07660-110**	M10	M14x1,5	14	12,8	14,3	M14x1,5	15,5	11,5	4,8	07660-810
07660-10X125	**07660-110X125**	M10x1,25	M14x1,5	14	12,8	14,3	M14x1,5	15,5	11,5	4,8	07660-810
07660-12	**07660-112**	M12	M16x1,5	16	14,8	16,3	M16x1,5	17,5	13,5	4,8	07660-812
07660-12X125	**07660-112X125**	M12x1,25	M16x1,5	16	14,8	16,3	M16x1,5	17,5	13,5	4,8	07660-812

Threaded inserts reinforced

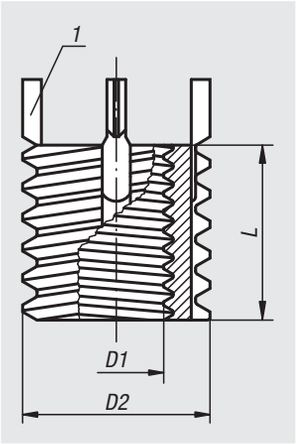

Material:
Steel or stainless steel

Version:
Passivated.

Sample order:
nlm 07661-12 reinforced threaded insert
nlm 07661-812 assembly tool

Note:
Reinforced threaded inserts allow threaded holes which have been damaged, torn out or jammed to be used again or to be repaired. This makes it possible to recover scrap and rejects of expensive products.
Reinforced threaded inserts are suitable for use in various materials, including light metals and casting.
Inserts with internal threads larger than M6 are supplied with four locking pins instead of two.
Permissible deviations:
The medium tolerance class applies to the threads listed, i.e. 6H for nut threads and 6g for bolt threads. Other dimensions ±0.25 mm.

With reinforced threaded inserts we also offer a version with a stronger cross-section for use in applications with greater stress.

Technical information see operating instructions for threaded inserts.

Advantages:
- Quick and easy installation.
- The insert is fixed with pins in order to prevent torsion due to twisting or vibrations.
- No other special tools are required besides the assembly tool.

Drawing reference:
1) locking pin

Order No. steel	Order No. stainless steel	D1 internal thread	D2 external thread	L length	Core drill Ø	Counter-sink Ø +0.25	Tap size	Min. thread depth	Removal drill Ø	Removal drilling depth	Order No. assembly tools
07661-04	**07661-104**	M4	M8	8	6,9	8,3	M8	9,5	5,5	4	07661-804
07661-05	**07661-105**	M5	M10x1,25	10	8,8	10,3	M10x1,25	12,5	7,5	4,8	07661-805
07661-06	**07661-106**	M6	M12x1,25	12	10,8	12,3	M12x1,25	14,5	9,5	4,8	07661-806
07661-08	**07661-108**	M8	M14x1,5	14	12,8	14,3	M14x1,5	16,5	11,5	4,8	07661-808
07661-08X1	**07661-108X1**	M8x1	M14x1,5	14	12,8	14,3	M14x1,5	16,5	11,5	4,8	07661-808
07661-10	**07661-110**	M10	M16x1,5	16	14,8	16,3	M16x1,5	18,5	13,5	4,8	07661-810
07661-10X125	**07661-110X125**	M10x1,25	M16x1,5	16	14,8	16,3	M16x1,5	18,5	13,5	4,8	07661-810
07661-12	**07661-112**	M12	M18x1,5	18	16,8	18,3	M18x1,5	20,5	15,5	4,8	07661-812
07661-12X125	**07661-112X125**	M12x1,25	M18x1,5	18	16,8	18,3	M18x1,5	20,5	15,5	4,8	07661-812
07661-14	**07661-114**	M14	M20x1,5	20	18,8	20,3	M20x1,5	22,5	17,5	4,8	07661-814
07661-14X15	**07661-114X15**	M14x1,5	M20x1,5	20	18,8	20,3	M20x1,5	22,5	17,5	4,8	07661-814
07661-16	**07661-116**	M16	M22x1,5	22	20,7	22,3	M22x1,5	24,5	17,8	6,4	07661-816
07661-16X15	**07661-116X15**	M16x1,5	M22x1,5	22	20,7	22,3	M22x1,5	24,5	17,8	6,4	07661-816
07661-18X15	**07661-118X15**	M18x1,5	M24x1,5	24	22,5	24,3	M24x1,5	26,5	19,8	6,4	07661-818
07661-20	**07661-120**	M20	M30x2	30	28	30,3	M30x2	34,5	25,8	6,4	07661-820
07661-20X15	**07661-120X15**	M20x1,5	M30x2	30	28	30,3	M30x2	34,5	25,8	6,4	07661-820
07661-22X15	**07661-122X15**	M22x1,5	M32x2	32	30	32,3	M32x2	36,5	27,8	6,4	07661-822
07661-24	**07661-124**	M24	M33x2	33	31	33,3	M33x2	37,5	28,8	6,4	07661-824
07661-24X2	**07661-124X2**	M24x2	M33x2	33	31	33,3	M33x2	37,5	28,8	6,4	07661-824

Threaded inserts solid body

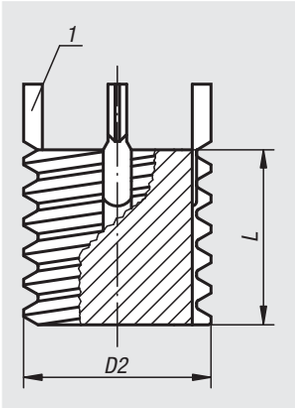

Material:
Steel.

Version:
Passivated.

Sample order:
nlm 07662-10X125 solid body threaded insert
nlm 07662-810 assembly tool

Note:
Solid body threaded inserts allow threaded holes which have been damaged, torn out or jammed to be used again or to be repaired. This makes it possible to recover scrap and rejects of expensive products.
Solid body threaded inserts are suitable for use in various materials, including light metals and castings.
Permissible deviations:
The medium tolerance class applies to the threads listed, i.e. 6g for bolt threads.
Other dimensions ±0.25 mm.

Solid body threaded inserts are used where threaded holes that have been drilled too large or drill hole spacings that have not been observed in workpieces need to be redone.

Technical information see operating instructions for threaded inserts.

Advantages:
- Quick and easy installation.
- The insert is fixed with pins in order to prevent torsion due to twisting or vibrations.
- No other special tools are required besides the assembly tool.

Drawing reference:
1) locking pin

Order No.	D2 external thread	L length	Core drill Ø	Counter-sink Ø +0.25	Tap size	Min. thread depth	Removal drill Ø	Removal drilling depth	Order No. assembly tools
07662-08	M8	8	6,9	8,3	M8	9,5	5,5	4	07662-808
07662-10X125	M10x1,25	10	8,8	10,3	M10x1,25	12,5	7,5	4,8	07662-810
07662-12X125	M12x1,25	12	10,8	12,3	M12x1,25	14,5	9,5	4,8	07662-812
07662-14X15	M14x1,5	14	12,8	14,3	M14x1,5	16,5	11,5	4,8	07662-814
07662-16X15	M16x1,5	16	14,8	16,3	M16x1,5	18,5	13,5	4,8	07662-816
07662-18X15	M18x1,5	18	16,8	18,3	M18x1,5	20,5	15,5	4,8	07662-818
07662-20X15	M20x1,5	20	18,8	20,3	M20x1,5	22,5	17,5	4,8	07662-820
07662-22X15	M22x1,5	22	20,7	22,3	M22x1,5	24,5	17,8	6,4	07662-822
07662-24X15	M24x1,5	24	22,5	24,3	M24x1,5	26,5	19,8	6,4	07662-824
07662-30X2	M30x2	30	28	30,3	M30x2	34,5	25,8	6,4	07662-830

Threaded inserts

with internal thread, self-locking

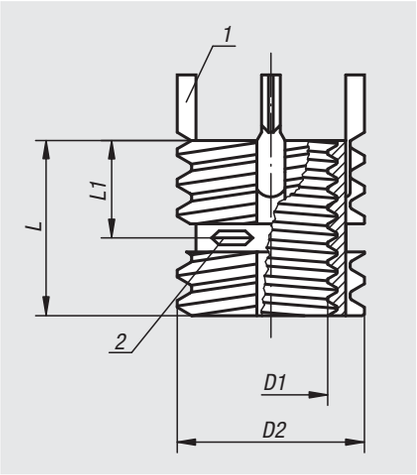

Material:
Stainless steel

Version:
Passivated.

Sample order:
nlm 07663-112 threaded insert
nlm 07660-812 assembly tool

Note:
Threaded inserts allow threaded holes which have been damaged, torn out or jammed to be used again or to be repaired. This makes it possible to recover scrap and rejects of expensive products.
Threaded inserts are suitable for use in various materials, including light metals and casting.
Inserts with internal threads larger than M6 are supplied with four locking pins instead of two.
Permissible deviations:
the medium tolerance class applies to the threads listed, i.e. 6H for nut threads and 6g for bolt threads.
Other dimensions ±0.25 mm.

Technical information see operating instructions for threaded inserts.

Advantages:
- Quick and easy installation.
- The insert is fixed with pins in order to prevent torsion due to twisting or vibrations.
- No other special tools are required besides the assembly tool.

Drawing reference:
1) locking pin
2) self-locking part of internal thread

Order No.	D1 internal thread	D2 external thread	L1 length	L length	Core drill Ø	Counter-sink Ø +0.25	Tap size	Min. thread depth	Removal drill Ø	Removal drilling depth	Order No. assembly tools
07663-105	M5	M8	4	8	6,9	8,3	M8	9,5	5,5	4	07660-805
07663-106	M6	M10x1,25	5	10	8,8	10,3	M10x1,25	11,5	7,5	4,8	07660-806
07663-108	M8	M12x1,25	6	12	10,8	12,3	M12x1,25	13,5	9,5	4,8	07660-808
07663-110	M10	M14x1,5	7	14	12,8	14,3	M14x1,5	15,5	11,5	4,8	07660-810
07663-112	M12	M16x1,5	8	16	14,8	16,3	M16x1,5	17,5	13,5	4,8	07660-812

Threaded inserts reinforced

internal thread, self-locking

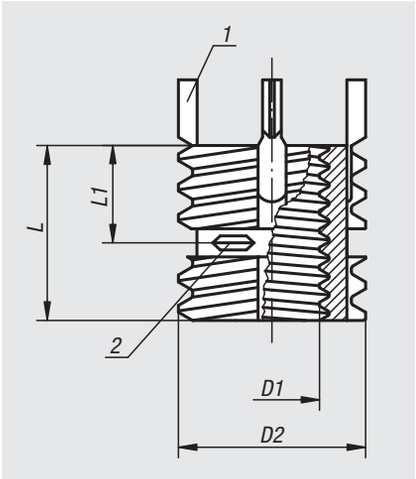

Material:
Stainless steel

Version:
Passivated.

Sample order:
nlm 07664-110 reinforced threaded insert
nlm 07661-810 assembly tool

Note:
Reinforced threaded inserts allow threaded holes which have been damaged, torn out or jammed to be used again or to be repaired. This makes it possible to recover scrap and rejects of expensive products. Reinforced threaded inserts are suitable for use in various materials, including light metals and casting. Inserts with internal threads larger than M6 are supplied with four locking pins instead of two.
Permissible deviations:
The medium tolerance class applies to the threads listed, i.e. 6H for nut threads and 6g for bolt threads. Other dimensions ±0.25 mm.

Technical information see operating instructions for threaded inserts.

Advantages:
- Quick and easy installation.
- The insert is fixed with pins in order to prevent torsion due to twisting or vibrations.
- No other special tools are required besides the assembly tool.

Drawing reference:
1) locking pin
2) self-locking part of internal thread

Order No.	D1 internal thread	D2 external thread	L1 length	L length	Core drill Ø	Counter-sink Ø +0.25	Tap size	Min. thread depth	Removal drill Ø	Removal drilling depth	Order No. assembly tools
07664-104	M4	M8	4	8	6,9	8,3	M8	9,5	5,5	4	07661-804
07664-105	M5	M10x1,25	5	10	8,8	10,3	M10x1,25	12,5	7,5	4,8	07661-805
07664-106	M6	M12x1,25	6	12	10,8	12,3	M12x1,25	14,5	9,5	4,8	07661-806
07664-108	M8	M14x1,5	7	14	12,8	14,3	M14x1,5	16,5	11,5	4,8	07661-808
07664-110	M10	M16x1,5	8	16	14,8	16,3	M16x1,5	18,5	13,5	4,8	07661-810
07664-112	M12	M18x1,5	9	18	16,8	18,3	M18x1,5	20,5	15,5	4,8	07661-812
07664-114	M14	M20x1,5	10	20	18,8	20,3	M20x1,5	22,5	17,5	4,8	07661-814
07664-116	M16	M22x1,5	11	22	20,7	22,3	M22x1,5	24,5	17,8	6,4	07661-816
07664-116X15	M16x1,5	M22x1,5	11	22	20,7	22,3	M22x1,5	24,5	17,8	6,4	07661-816
07664-118X15	M18x1,5	M24x1,5	12	24	22,5	24,3	M24x1,5	26,5	19,8	6,4	07661-818
07664-120	M20	M30x2	15	30	28	30,3	M30x2	34,5	25,8	6,4	07661-820

Repair kit

Material:
Steel.

Version:
Passivated.

Sample order:
nlm 07666-01

Note:
The repair kit allows threaded holes which have been damaged, torn out or jammed to be used again or to be repaired. This makes it possible to recover scrap and rejects of expensive products.
Threaded inserts are suitable for use in various materials, including light metals and casting.
Inserts with internal threads larger than M6 are supplied with four locking pins instead of two.
Permissible deviations:
the medium tolerance class applies to the threads listed, i.e. 6H for nut threads and 6g for bolt threads. Other dimensions ±0.25 mm.

Technical information see operating instructions for threaded inserts.

Advantages:
- Quick and easy installation.
- The insert is fixed with pins in order to prevent torsion due to twisting or vibrations.
- No other special tools are required besides the assembly tool.

Order No.	Threaded inserts supplied internal thread	Threaded inserts supplied external thread	Length of inserts	Number of inserts	Number of assembly tool	Order No. Threaded insert
07666-01	M5	M8	8	8	1	07660-05
	M6	M10x1,25	10	8	1	07660-06
	M8	M12x1,25	12	6	1	07660-08
	M8x1	M12x1,25	12	6	-	07660-08X1
	M10	M14x1,5	14	4	1	07660-10
	M10x1,25	M14x1,5	14	4	-	07660-10X125
	M12	M16x1,5	16	3	1	07660-12
	M12x1,25	M16x1,5	16	3	-	07660-12X125

Operating instructions for threaded inserts

Fitting instructions

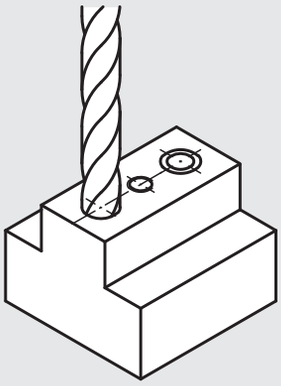

1.*
Rebore the old thread and countersink it (82° – 100°).

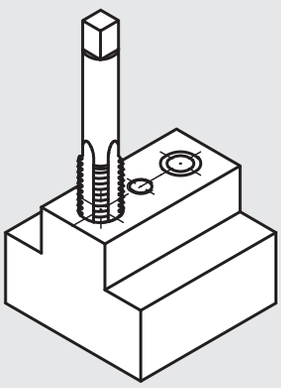

2.*
Tap thread with a standard screw tap.

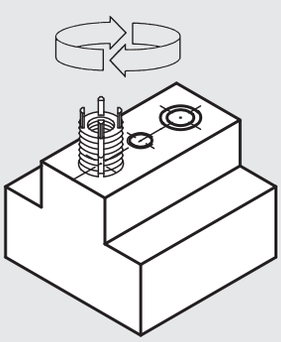

3.
Screw in the insert to just below the surface (0.3 – 0.7 mm).

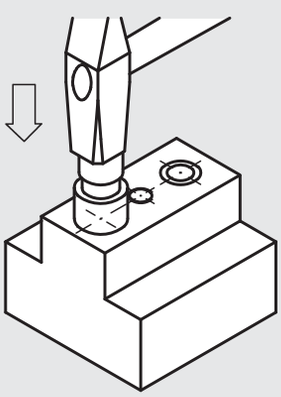

4.
Drive in the locking pins by striking the assembly tool lightly with a hammer.

* For steps 1 and 2 see table under installation of threaded inserts.

Removal instructions

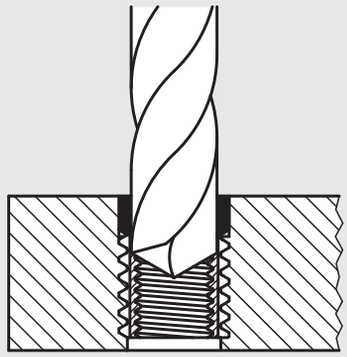

1.*
Rebore the material between the locking pins and the internal thread to the specified depth.

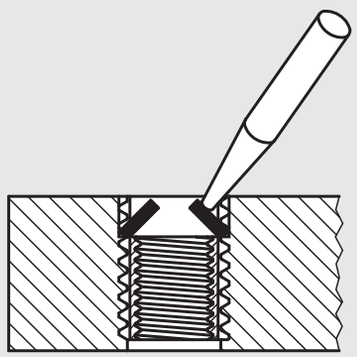

2.
Bend the locking pins inwards and break them off.

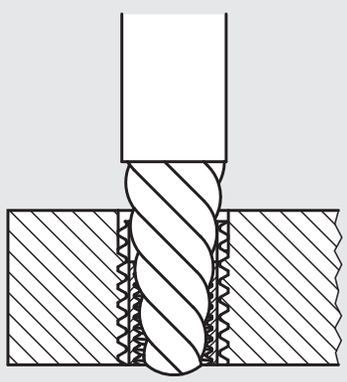

3.
Remove the old insert with a screw extractor.

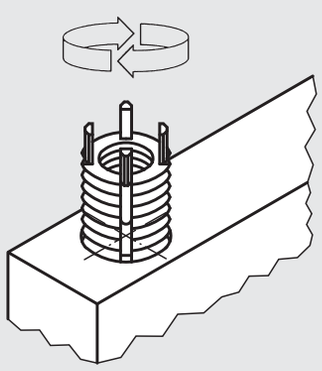

4.
Install a new threaded insert in the original threaded hole.

* For step 1 see tables under “removal drilling depth”

Studs

with screw-in stop for gluing in

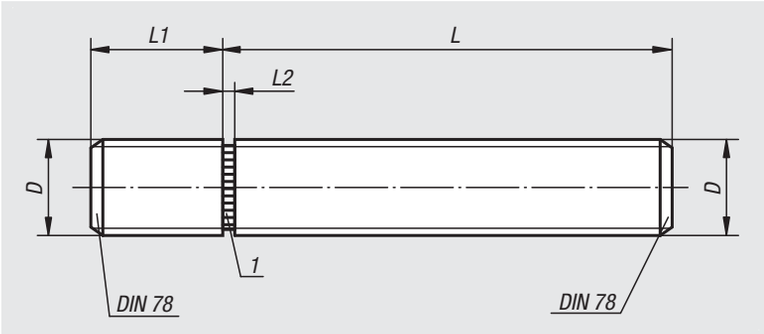

Material:
Steel or 1.4305 stainless steel

Version:
Steel blue passivated.
Stainless steel, bright.

Sample order:
nlm 07670-1040201

Note:
Studs with screw-in stop have been designed especially for gluing-in. They allow mechanical connecting elements with external thread to be made cost-effectively for small and medium-sized series.
The LOCTITE products 638 and 648 (see 97990) have proven themselves in practice as successful bonding agents.

Drawing reference:
1) screw-in stop

Order No. steel	Order No. stainless steel	D	L	L1	L2
07670-1040201	07670-1040202	M4	20	6	1
07670-1040301	07670-1040302	M4	30	6	1
07670-1040401	07670-1040402	M4	40	6	1
07670-1040501	07670-1040502	M4	50	6	1
07670-1050201	07670-1050202	M5	20	8	1
07670-1050301	07670-1050302	M5	30	8	1
07670-1050401	07670-1050402	M5	40	8	1
07670-1050501	07670-1050502	M5	50	8	1
07670-1050601	07670-1050602	M5	60	8	1
07670-1060201	07670-1060202	M6	20	9	1,5
07670-1060301	07670-1060302	M6	30	9	1,5
07670-1060401	07670-1060402	M6	40	9	1,5
07670-1060501	07670-1060502	M6	50	9	1,5
07670-1060601	07670-1060602	M6	60	9	1,5
07670-1080201	07670-1080202	M8	20	12	1,5
07670-1080301	07670-1080302	M8	30	12	1,5
07670-1080401	07670-1080402	M8	40	12	1,5
07670-1080501	07670-1080502	M8	50	12	1,5
07670-1080601	07670-1080602	M8	60	12	1,5
07670-1080801	07670-1080802	M8	80	12	1,5
07670-1100201	07670-1100202	M10	20	14	2
07670-1100301	07670-1100302	M10	30	14	2
07670-1100401	07670-1100402	M10	40	14	2
07670-1100501	07670-1100502	M10	50	14	2
07670-1100601	07670-1100602	M10	60	14	2
07670-1100801	07670-1100802	M10	80	14	2
07670-1120301	07670-1120302	M12	30	17	2
07670-1120401	07670-1120402	M12	40	17	2
07670-1120501	07670-1120502	M12	50	17	2
07670-1120601	07670-1120602	M12	60	17	2
07670-1120801	07670-1120802	M12	80	17	2
07670-1160301	07670-1160302	M16	30	22	2
07670-1160401	07670-1160402	M16	40	22	2
07670-1160501	07670-1160502	M16	50	22	2
07670-1160601	07670-1160602	M16	60	22	2
07670-1160801	07670-1160802	M16	80	22	2

Technical information for studs with screw-in stop

Studs with screw-in stop are designed especially as glue-in studs. They allow mechanical connecting elements with external thread to be made cost-effectively for small and medium-sized series.

Advantages:

– Defined screw-in length due to the screw-in stop.
– Screwing in against the screw-in stop achieves an optimal bonding gap and hence a permanently safe bond that has been proven a thousandfold.
– Easy and low-cost connection.
– The operating part product line can be quickly and easily supplemented by other external thread variations.

The LOCTITE products 638 and 648 have proven themselves in practice as a successful bonding agent.

07680

Ring bolts

DIN 580 / stainless steel similar to DIN 580

Material:
1.1141 steel or 1.4301 stainless steel.

Version:
Steel: drop forged.
Stainless steel: cast.

Sample order:
nlm 07680-20

Note:
DIN 580 steel ring bolts:
For high demand lifting and handling functions in safety relevant areas (machine construction, lifting units, lifting tackle).
Stainless steel ring bolts similar to DIN 580:
For light lifting, and handling functions without special requirement, e.g. fence construction, chain barriers and light machining.
F2 load handling with max. 45° sling angle per ring bolt.

On request:
Available with CE marking and certificate of conformity.

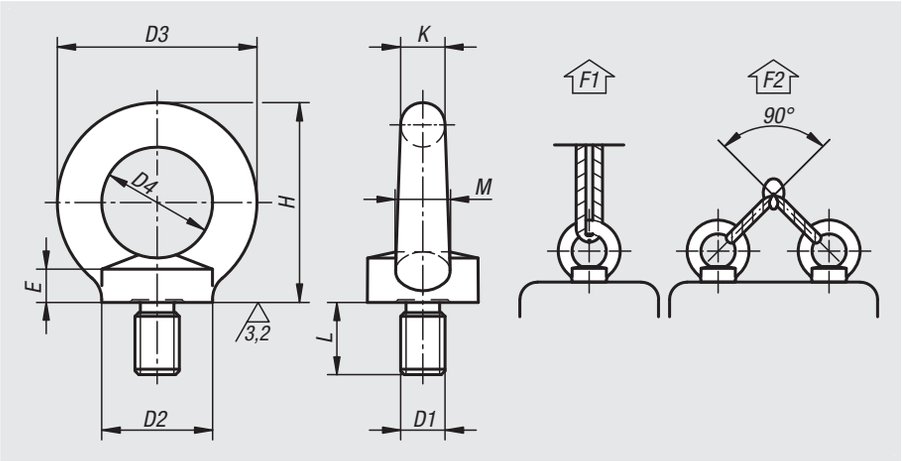

Order No. steel	Order No. stainless steel	D1	L	D2	D3	D4	E	H	K	M	F1 max. kN	F2 max. kN
07680-08	**07680-108**	M8	13	20	36	20	6	36	8	10	1,4	0,95
07680-10	**07680-110**	M10	17	25	45	25	8	45	10	12	2,3	1,7
07680-12	**07680-112**	M12	20,5	30	54	30	10	53	12	14	3,4	2,4
07680-16	**07680-116**	M16	27	35	63	35	12	62	14	16	7	5
07680-20	**-**	M20	30	40	72	40	14	71	16	19	12	8,3
07680-24	**-**	M24	36	50	90	50	18	90	20	24	18	12,7

07680-01

Ring bolts

similar to DIN 580

Material:
Stainless steel 1.4401.

Version:
Bright.

Sample order:
nlm 07680-01-08

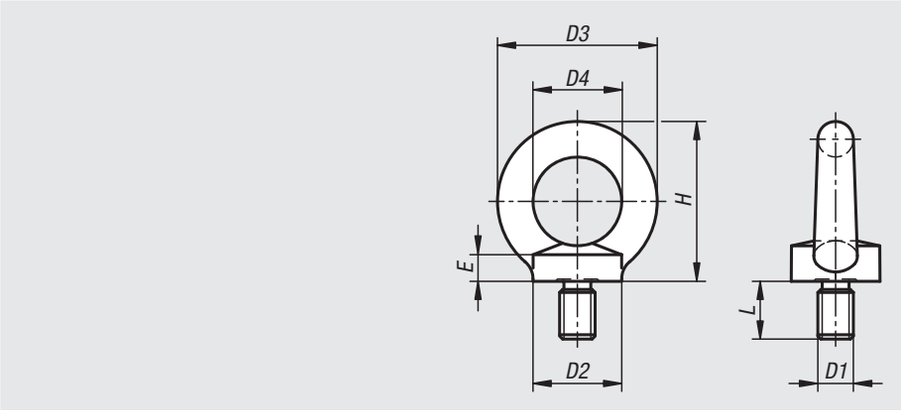

Order No.	D1	D2	D3	D4	E	H	L
07680-01-08	M8	20	36	20	6	36	13
07680-01-10	M10	25	45	25	8	45	17
07680-01-12	M12	30	54	30	10	53	20,5
07680-01-16	M16	35	63	35	12	62	27
07680-01-20	M20	40	72	40	14	71	30

Ring nuts DIN 582

stainless steel similar to DIN 582

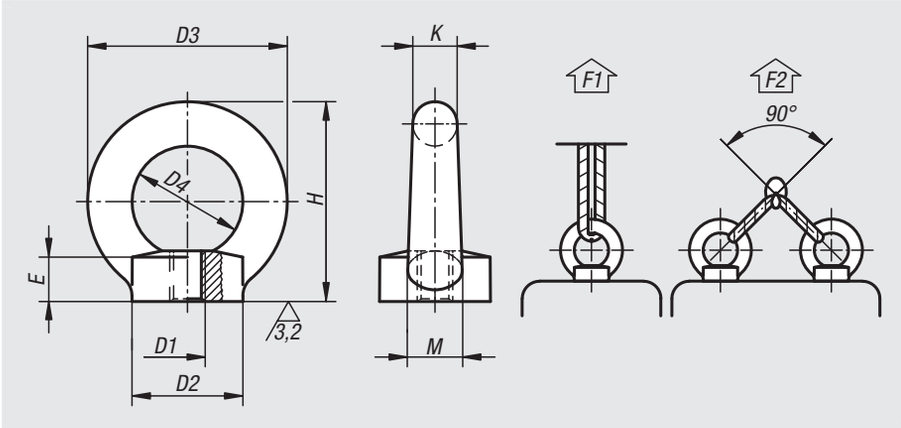

Material:
1.1141 steel or 1.4301 stainless steel.

Version:
Steel: drop forged.
stainless steel: cast.

Sample order:
nlm 07690-10

Note:
DIN 582 steel ring nuts:
For high demand lifting and handling functions in safety relevant areas (machine construction, lifting units, lifting tackle).
Stainless steel ring nuts similar to DIN 582:
For light lifting, and handling functions without special requirement, e.g. fence construction, chain barriers and light machining.
F2 load handling with max. 45° sling angle per ring nut.

On request:
Available with CE marking and certificate of conformity.

Order No. steel	Order No. stainless steel	D1	D2	D3	D4	E	H	K	M	F1 max. kN	F2 max. kN
07690-08	**07690-108**	M8	20	36	20	8,5	36	8	10	1,4	0,95
07690-10	**07690-110**	M10	25	45	25	10	45	10	12	2,3	1,7
07690-12	**07690-112**	M12	30	54	30	11	53	12	14	3,4	2,4
07690-16	**07690-116**	M16	35	63	35	13	62	14	16	7	5
07690-20	**07690-120**	M20	40	72	40	16	71	16	19	12	8,3
07690-24	**-**	M24	50	90	50	20	90	20	24	18	12,7

07690-01

Ring nuts

similar to DIN 582

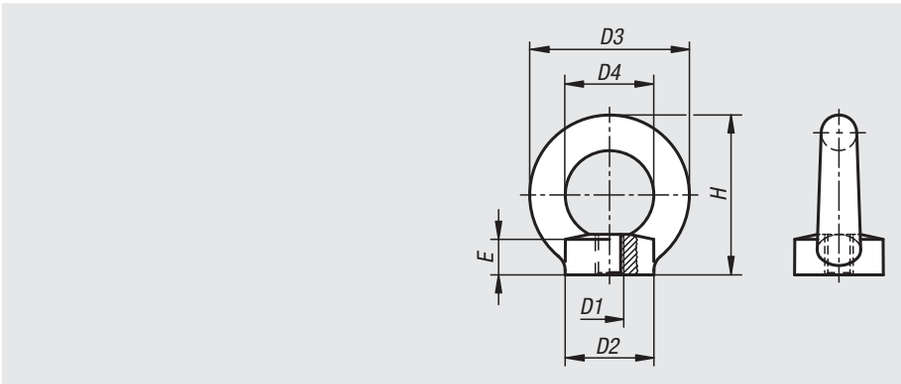

Material:
Stainless steel 1.4401.

Version:
Bright.

Sample order:
nlm 07690-01-08

Order No.	D1	D2	D3	D4	E	H
07690-01-08	M8	20	36	20	6	36
07690-01-10	M10	25	45	25	8	45
07690-01-12	M12	30	54	30	10	53
07690-01-16	M16	35	63	35	12	62
07690-01-20	M20	40	72	40	14	71

Ring bolts rotatable

high-strength grade 10

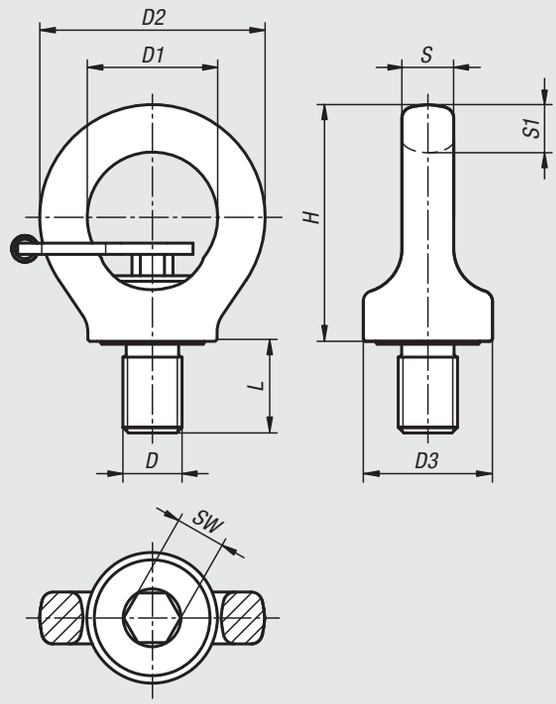

Material:
Ring 1.6541 steel.
Screw steel.

Version:
Ring forged and high tensile tempered.
100% electromagnetic crack tested per EN 1677-1, 4x safety factor.
Plastic-coated.
Thread grade 10.9.

Sample order:
nlm 07695-08151

Note:
In contrast to DIN 580 ring bolts this ring bolt is rotatable, therefore the load direction is adjustable and unintended tightening or loosening is negated.

– 4x safety factor
– lateral loading up to 90° is possible
– ring can rotate 360° with tightened screw

The listed load values apply for a minimum screw length of 1x nominal thread diameter in steel with a minimum tensile strength of 363 N/mm², at an application temperature of -20 °C to +100 °C.

Maximum lifting weight "G" in kg for different sling types

Sling configuration	G	G	G	G	G	G	G	G
No. of slings	1	2	1	2	2	2	3 - 4	3 - 4
Sling angle ∢	0°	0°	90°	90°	0°-45°	45°-60°	0°-45°	45°-60°
M8	1000	2000	300	600	420	300	630	450
M10	1000	2000	400	800	560	400	840	600
M12	2000	4000	750	1500	1000	750	1600	1120
M16	4000	8000	1500	3000	2000	1500	3150	2250
M20	6000	12000	2300	4600	3220	2300	4830	3450
M24	8000	16000	3200	6400	4480	3200	6700	4800
M30	12000	24000	4500	9000	6300	4500	9400	6700

Order No.	Type	D	D1	D2	D3	H	L	S	S1	SW	Permissible load kg
07695-08151	with hex key	M8	25	44	25	47	12	9	9,5	6	300
07695-10151	with hex key	M10	25	44	26	47	15	9	9,5	6	400
07695-12181	with hex key	M12	30	52	34	55	18	11	11	8	750
07695-16241	with hex key	M16	35	61	35	64	24	14	13	10	1500
07695-20301	with hex key	M20	40	70	44	74	30	16	15	12	2300
07695-24361	with hex key	M24	48	84	52	91	36	19	18	14	3200
07695-30451	with hex key	M30	60	105	61	112	45	25	22,5	17	4500
07695-08150	without hex key	M8	25	44	25	47	12	8	11	6	300
07695-10150	without hex key	M10	25	44	25	47	15	8	11	6	400
07695-12180	without hex key	M12	30	52	33	55	18	10	13	8	750
07695-16240	without hex key	M16	35	61	35	64	24	14	13	10	1500
07695-20300	without hex key	M20	40	70	44	74	30	16	17	12	2300
07695-24360	without hex key	M24	48	84	52	91	36	19	21	14	3200
07695-30450	without hex key	M30	60	108	62	112	45	27	26	17	4500

Ring bolts

swivel and 360° rotatable, grade 8

Material:
Steel.

Version:
Quality class 8, ball bearing;
red plastic-coated

Sample order:
nlm 07710-1018

Note:
Compact and light design, full loading on all sides. 4x safety factor against breakage in all loading axis. Rotatable 360°. Link swivel range max. 180°. The ball bearing allows the ring to rotate even under load.

Lifting or securing loads, swivel rings have many uses.

For the loading capacity to be valid it must be ensured that the ring is in line with the load. The swivel face must lie flat on the support beam and the screw must always be screwed in fully.

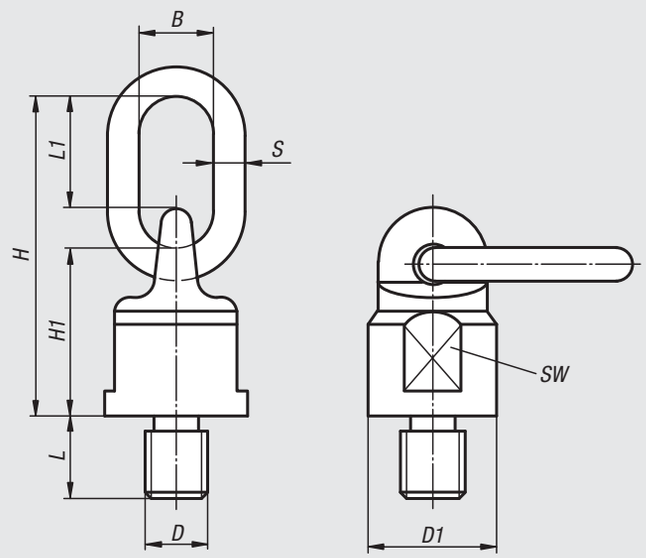

Maximum lifting weight "G" in kg for different sling types

Sling confguration	G	G	G	G	G	G	G	G
No. of slings	1	2	1	2	2	2	3 - 4	3 - 4
sling angle ∢	0°	0°	90°	90°	0°-45°	45°-60°	0°-45°	45°-60°
M10	600	1200	300	600	420	300	630	450
M12	1000	2000	500	1000	750	500	1100	750
M16	2000	4000	1120	2000	1500	1120	2360	1600
M20	4000	8000	2000	4000	2800	2000	4000	3000
M24	6300	12500	3150	6300	4250	3150	6300	4750
M30	10600	21200	5300	10600	7100	5800	11200	8000
M36	12500	25000	8000	16000	11200	8000	16800	12000

Order No.	B	D	D1	H	H1	L	L1	S	SW	Permissible load kg
07710-1018	30	M10	38	105	50	18	46	13	30	300
07710-1218	30	M12	38	105	50	18	46	13	30	500
07710-1620	30	M16	38	105	50	20	46	13	30	1120
07710-2030	34	M20	50	131	61	30	57	16	40	2000
07710-2430	40	M24	58	153	68	30	70	19	48	3150
07710-3035	40	M30	75	165	80	35	65	20	65	5300
07710-3654	50	M36	85	205	95	54	90	22	75	8000

Bow shackles

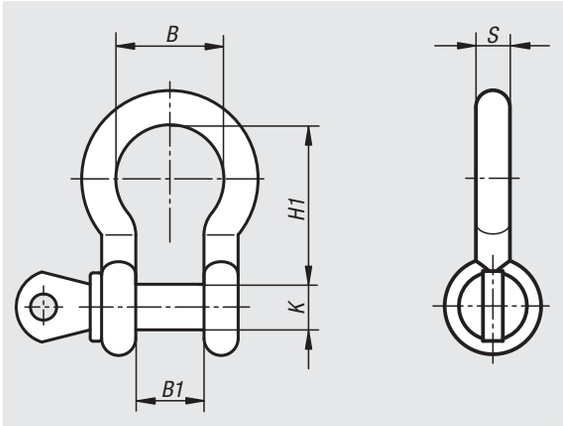

Material:
Steel.

Version:
Bow form.

Sample order:
nlm 07715-0100011

Note:
Shackles and bolts may vary in colour.
Paint may cause the thread to be stiff.

Order No.	B	B1	S	K	H1	Inches	Permissible load kg
07715-0050008	20	12	7	8	28	1/4	500
07715-0075010	21	12,5	9	10	31	5/16	750
07715-0100011	26	15,5	10	11	36,5	3/8	1000
07715-0150012	29	17,5	11	12	41,5	7/16	1500
07715-0200016	32	20	13,5	16	47	1/2	2000
07715-0325019	43	26	16	19	60	5/8	3250
07715-0475022	51	31	19	22	71	3/4	4750
07715-0650025	58	36	22	26	83	7/8	6500
07715-0850028	68	43	25	28	92	1	8500

D-shackles

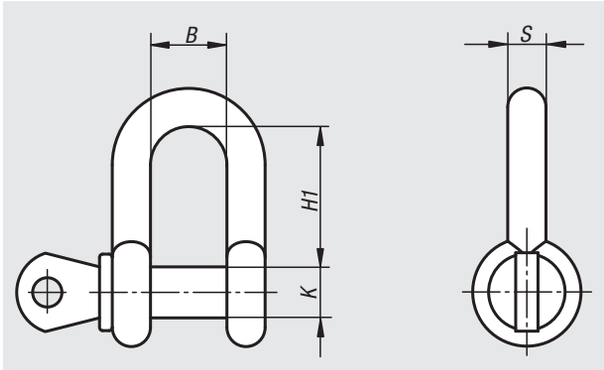

Material:
Steel.

Version:
D form

Sample order:
nlm 07716-0050008

Note:
Shackles and bolts may vary in colour.
Paint may cause the thread to be stiff.

Order No.	B	S	K	H1	Inches	Permissible load kg
07716-0050008	12	7	8	22,5	1/4	500
07716-0075010	13,5	9	10	25,5	5/16	750
07716-0100011	17	10	11	31	3/8	1000
07716-0150012	18,5	11	12	36	7/16	1500
07716-0200016	20	13,5	16	42	1/2	2000
07716-0325019	27	16	19	51	5/8	3250
07716-0475022	31	19	22	64	3/4	4750
07716-0650025	36	22	25	73	7/8	6500
07716-0850028	43	25	28	80	1	8500

Weld-on D-rings

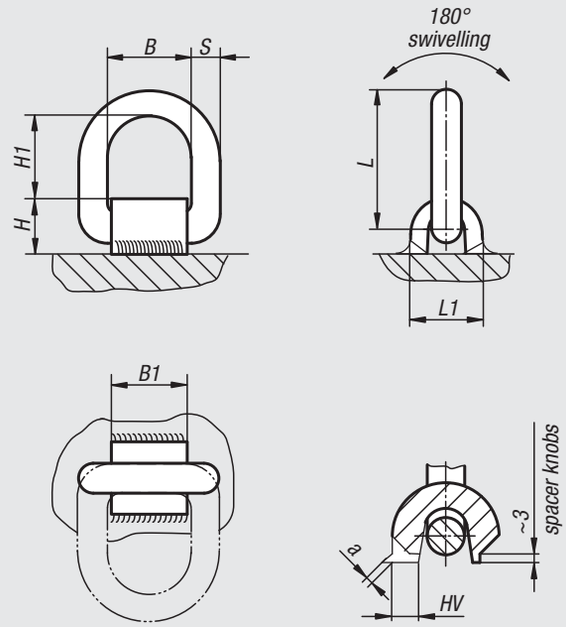

Material:
Eye 1.6541 steel.
Welding block, S355JR steel.

Version:
D-ring forged, high tensile tempered, red plastic coated.
Welding block forged, high tensile tempered, bright.

Sample order:
nlm 07720-1000

Note:
Weld-on D-rings enable quick installation.

They offer a compact design and can be loaded from all sides, with 4x safety factor against breakage.

The welding block is forged from easy to weld S355JR (St 52-3). The small knobs serve as spacers for the air gap required for fillet welding (ca. 3 mm).
The load data given in the table is clearly marked on the welding block, they apply to worst scenario cases for the lifting type shown.

Welding must be carried out by a proficient welder certified to EN 287-1.

Maximum lifting weight "G" in kg for different sling types

Sling configuration	G	G	G	G	G		G	
No. of slings	1	2	1	2	2	2	3 - 4	3 - 4
Sling angle ∢	0°	0°	90°	90°	0°-45°	45°-60°	0°-45°	45°-60°
07720-1***	1600	3200	1120	2240	1500	1120	2360	1600
07720-2***	3000	6000	2000	4000	2800	2000	4000	3000
07720-3***	4750	9500	3150	6300	4250	3150	6300	4750
07720-5***	8000	16000	5300	10600	7100	5300	11200	8000

Order No. without spring strip	Order No. with spring strip	B	B1	H	H1	L	L1	S	Weld seam	Permissible load kg
07720-1000	**07720-1001**	40	38	32	40	73	38	13	HV 5 + a3	1120
07720-2000	**07720-2001**	41	38	32	45	81	40	13	HV 5 + a3	2000
07720-3000	**07720-3001**	45	43	38	45	87	42	17	HV 8 + a3	3150
07720-5000	**07720-5001**	55	50	48	57	108	60	22	HV 12 + a4	5300

Hoist rings 360° rotation

grade 10

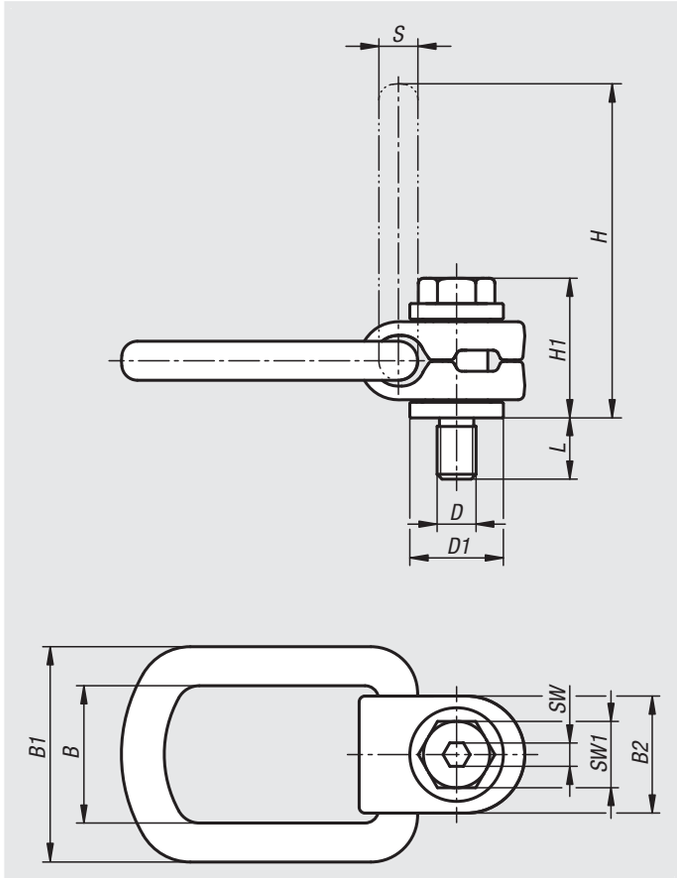

Material:
Ring and attachment shackle steel.
Bolt and bushing steel.

Version:
Ring and shackle forged, hardened and tempered. 100% electromagnetic crack detection, plastic-coating yellow.
Bolt grade 10.9. 100% electromagnetic crack detection.
Bush galvanized.

Sample order:
nlm 07725-08016

Note:
These hoist rings have full swivel and pivot action and can take the full load from any direction. An integrated spring holds the ring in any position. The working load limit is specified on the hoist ring. This applies to the most unfavourable load rating (see table). The test load is 2.5 times the maximum permissible load. With captive but removable hexagon screw. The hoist rings corresponding to the Machinery Directive and are BG certified.

Temperature range:
from -40 °C to 100 °C = 100% permissible load
up to 200°C = 85% permissible load
up to 250°C = 80% permissible load
up to 350°C = 75% permissible load

The specified load values are valid for a minimum thread depth of 1.5x nominal thread diameter in steel with a minimum tensile strength of 363 N/mm².

Maximum lifting weight "G" in kg for different sling types

Sling confguration	G	G	G	G	G		G	G		G
No. of slings	1	2	1	2	2	2	2	3 - 4	3 - 4	3 - 4
sling angle ∢	0°	90°	0°	90°	0°-45°	45°-60°	asymmetric	0°-45°	45°-60°	asymmetric
M8	300	600	300	600	420	300	300	630	450	300
M10	630	1260	630	1260	880	630	630	1320	950	630
M12	1000	2000	1000	2000	1400	1000	1000	2100	1500	1000
M16	1500	3000	1500	3000	2100	1500	1500	3150	2250	1500
M20	2500	5000	2500	5000	3500	2500	2500	5250	3750	2500
M24	4000	8000	4000	8000	5600	4000	4000	8400	6000	4000
M30	5000	10000	5000	10000	7000	5000	5000	10500	7500	5000
M36	7000	14000	7000	14000	9800	7000	7000	14700	10500	7000

Order No.	D	D1	B	B1	B2	H	H1	L	S	SW	SW1	max. permissible load kg	Tightening torque Nm
07725-08016	M8	24	35	55	30	85	35	11	10	6	13	300	30
07725-10021	M10	24	35	55	30	85	36	16	10	6	17	630	60
07725-12024	M12	31	37	57	33	98	44	18	13,5	8	19	1000	100
07725-16029	M16	31	37	57	33	98	46	24	13,5	10	24	1500	150
07725-20036	M20	45	54	82	50	140	57	34	16,5	12	30	2500	250
07725-24041	M24	45	54	82	50	140	59	36	16,5	14	36	4000	400
07725-30053	M30	59	65	99	60	170	81	48	22,5	17	46	5000	500
07725-36060	M36	59	65	99	60	172	76	55	22,5	22	55	7000	700

Hoist rings

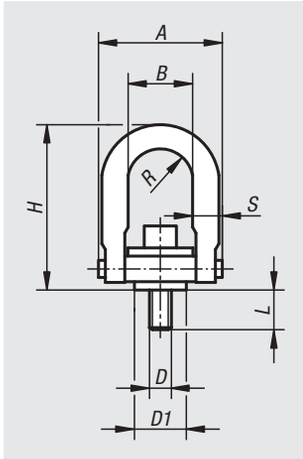

Material:
Carbon steel.

Version:
Black oxidised.

Sample order:
nlm 07730-10

Note:
Every hoist ring undergoes an additional visual inspection after load testing (5x safety factor).
A safety data sheet for installation is included with every hoist ring.
Do not use spacer washers between the bush flange and support beam.
Tighten the screws to the stated torque and check and re-tighten regularly.
After installation check if the ring swivels and turns freely in all directions.
Lift with care! Avoid impacts!
In no event must the permissible load stamped on the hoist ring be exceeded.

Important! Never use excessively large hooks, chains or slings, as they could force the U-shaped eye to spread.

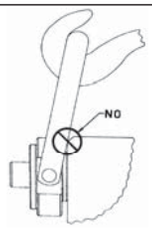

Check that the eye turns/swivels freely in all directions.

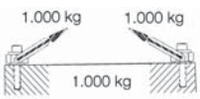

Avoid excessively acute angles. To carry a load weighing 1000 kg attached at two points at a 30° angle, each sling must be capable of taking a load of 1000 kg.

Order No.	Version	D	D1	A	B	H	L	R	S	max. permissible load kg	Tightening torque Nm
07730-08	standard	M8	19	46,7	22	67,8	12,5	10,9	9,7	400	9,81
07730-10	standard	M10	19	46,7	22	67,8	17,5	10,9	9,7	450	16,7
07730-12	standard	M12	38,1	89,4	46	123	19	22,4	19	1050	37,3
07730-16	standard	M16	38,1	89,4	46	123	29	22,4	19	1900	80,4
07730-201	standard	M20	38,1	89,4	46	123	34	22,4	19	2150	133
07730-20	standard	M20	58,7	130,6	70	163	32	35,6	25,4	3000	133
07730-24	standard	M24	58,7	130,6	70	163	37	35,6	25,4	4200	304
07730-30	standard	M30	81	165,1	90	221,7	46	44,5	31,7	7000	588
07730-36	standard	M36	106,4	217,2	115	316,7	68	57,2	44,4	11000	981
07730-42	standard	M42	106,4	217,2	115	316,7	68	57,2	44,4	12500	981
07730-48	standard	M48	106,4	217,2	115	316,7	88	57,2	44,4	13500	981
07730-112	long	M12	38,1	89,4	46	170,7	19	22,4	19	1050	37,3
07730-116	long	M16	38,1	89,4	46	170,7	29	22,4	19	1900	80,4
07730-1201	long	M20	38,1	89,4	46	170,7	34	22,4	19	2150	133
07730-120	long	M20	58,7	130,6	70	206	32	35,6	25,4	3000	133
07730-124	long	M24	58,7	130,6	70	206	37	35,6	25,4	4200	304

Hoist rings with Envirolox® coating

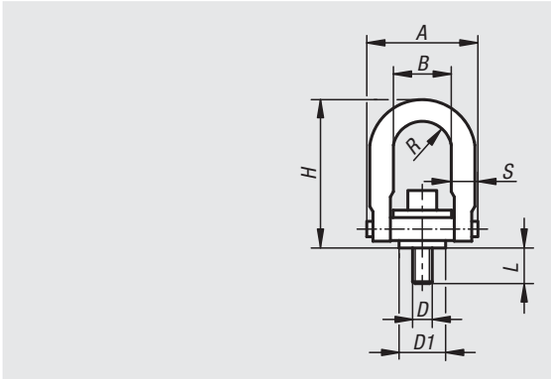

Material:
Carbon steel.

Version:
Hoist ring with Envirolox® protective coating.
Washer chrome plated.

Sample order:
nlm 07735-10

Note:
Every hoist ring undergoes an additional visual inspection after load testing (5x safety factor).
The new Envirolox® protective coating is environmentally friendly and is proven to be effective in extreme conditions.
Possible application areas: in corrosive atmospheres such as maritime freight, chemical industry etc.

Safety:
Safety instructions see 07730.

Order No.	A	B	D	D1	H	L	R	S	max. permissible load kg	Tightening torque Nm
07735-08	46,7	22	M8	19	67,8	12,5	10,9	9,7	400	9,81
07735-10	46,7	22	M10	19	67,8	17,5	10,9	9,7	450	16,7
07735-12	89,4	46	M12	38,1	121,4	19	22,4	19	1050	37,3
07735-16	89,4	46	M16	38,1	121,4	29	22,4	19	1900	80,4
07735-20	89,4	46	M20	38,1	121,4	34	22,4	19	2150	133
07735-120	130,6	70	M20	58,7	165,6	32	35,6	25,4	3000	133
07735-24	130,6	70	M24	58,7	165,6	37	35,6	25,4	4200	304
07735-30	165,1	90	M30	81	221,7	46	44,5	31,7	7000	588

Lifting rings

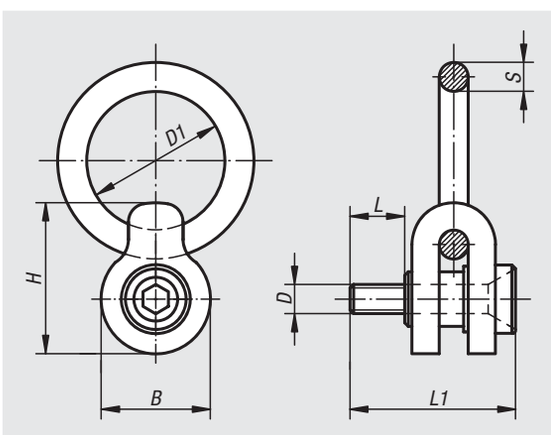

Material:
Carbon steel.

Version:
Black oxidised.

Sample order:
nlm 07750-10

Note:
Every lifting ring undergoes an additional visual inspection after load testing (5x safety factor).
A safety data sheet for installation is included with every lifting ring.
Do not use spacer washers between the bush flange and support surface.
Tighten the screws to the stated torque and check and re-tighten regularly. After installation check if the ring swivels and turns freely in all directions.
Lift with care! Avoid impacts!
In no event must the permissible load stamped on the lifting ring be exceeded.

Order No.	D	D1	B	H	L	L1	S	max. permissible load kg	Tightening torque Nm
07750-08	M8	50,5	38	51	16	61	9,5	325	4,21
07750-10	M10	50,5	38	51	20	63	9,5	500	5,88
07750-12	M12	76	60	81	24	85	16	725	19,61
07750-16	M16	76	60	81	31	94	16	1400	34,32
07750-20	M20	101,5	95	125,5	40	133	25,5	2290	68,65
07750-24	M24	101,5	95	125,5	47	147	25,5	3050	122,6

Swivel bales

with axial ring

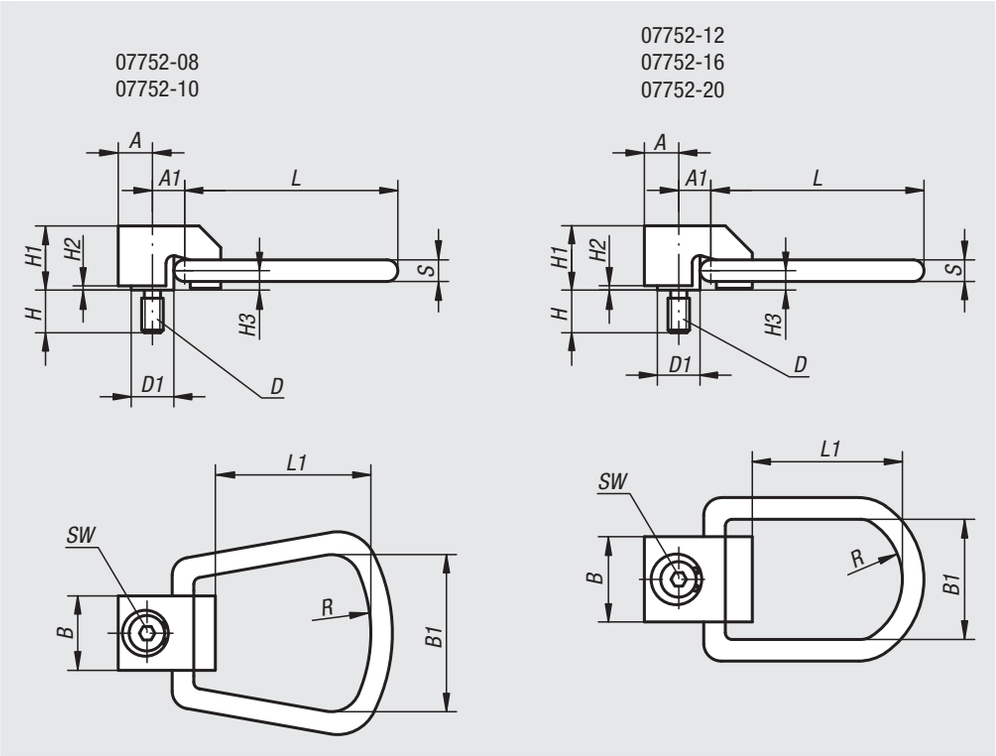

Material:
Carbon steel.

Version:
Black oxidised.

Sample order:
nlm 07752-12

Note:
Every swivel bale undergoes an additional visual inspection after load testing (5x safety factor).
A safety data sheet for installation is included with every swivel bale.
Do not use spacer washers between the bush flange and support beam.
Tighten the screws to the stated torque and check and re-tighten regularly. After installation check if the bale swivels and turns freely in all directions.
Lift with care! Avoid impacts!
In no event must the permissible load stamped on the swivel bale be exceeded.

Order No.	A	A1	B	B1	D	D1	H	H1	H2	H3	L	L1	R	S	SW	Tightening torque Nm	max. permissible load kg
07752-08	12,7	12,7	25,4	44,5	M8	15,8	15,8	23,8	1,6	7,2	75,4	52,4	25,4	7,9	6	4,2	325
07752-10	12,7	12,7	25,4	44,5	M10	15,8	19,8	23,8	1,6	7,2	75,4	52,4	25,4	7,9	6	6	500
07752-12	19,8	23,8	41,3	50,8	M12	25,4	23,8	40,1	2	11,1	120,7	82,6	38,1	12,7	10	20	725
07752-16	19,8	23,8	41,3	50,8	M16	25,4	31,8	40,1	2	11,1	120,7	82,6	38,1	12,7	10	40	1400
07752-20	19,8	23,8	41,3	50,8	M20	25,4	39,7	40,1	2	11,1	120,7	82,6	38,1	12,7	10	70	2290

Hoist rings

Material:
Carbon steel or stainless steel.

Version:
Steel black oxidised.
Stainless steel bright.

Sample order:
nlm 07770-10 Hoist ring.
nlm 07770-101 Assembly key.

Note hoist ring:
Do not use spacer washers between the bush flange and support surface.
The permissible countersink diameter (D2) for the thread should be retained.
Tighten the screws to the stated torque and check and re-tighten regularly. After installation check if the ring turns and swivels freely in all directions.
Lift with care! Avoid impacts!
In no event must the permissible load stamped on the hoist ring be exceeded.

Note assembly key:
- Insert the assembly key in the holes in the hoist ring.
- Tighten the hoist ring to the recommended torque using a torque wrench.
- The permissible diameter of the countersink must be adhered to.

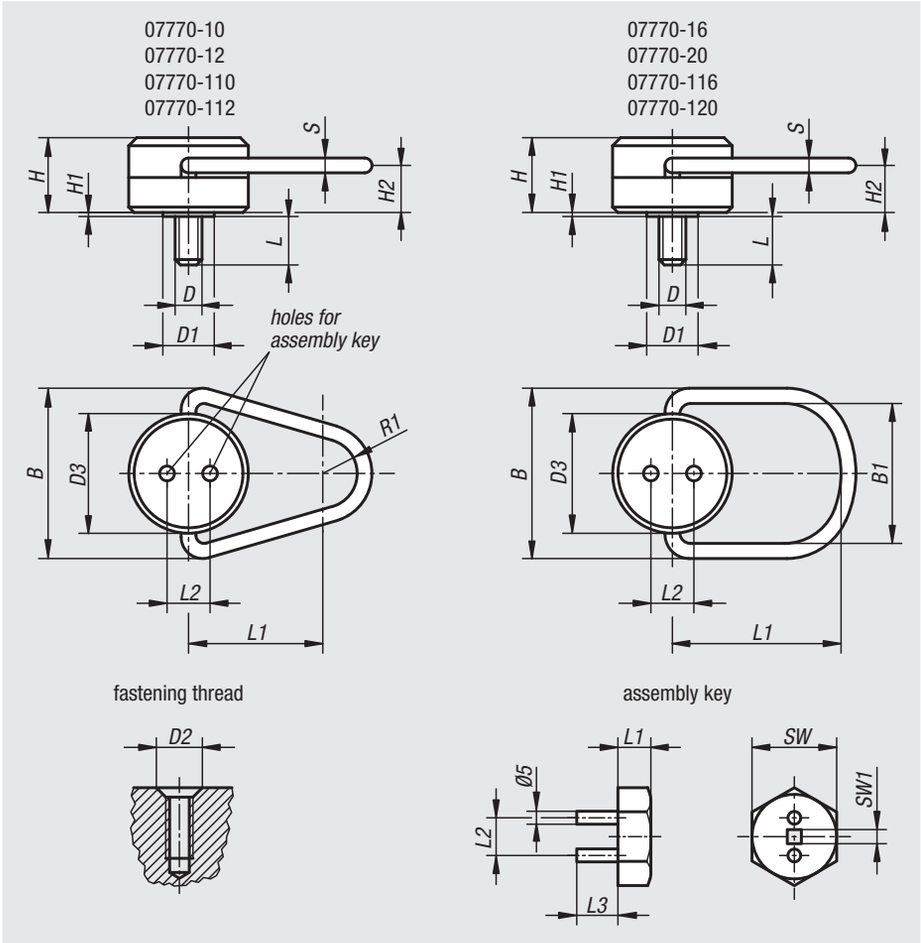

Important! Never use excessively large hooks, chains or slings, as they could force the U-shaped eye to spread.

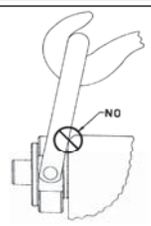

Check that the eye turns/swivels freely in all directions.

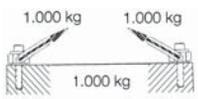

Avoid excessively acute angles. To carry a load weighing 1000 kg attached at two points at a 30° angle, each sling must be capable of taking a load of 1000 kg.

Hoist ring

Order No.	Material	B	B1	D	D1	D2	D3	H	H1	H2	L	L1	L2	R1	S	max. permissible load kg	Recommended tightening torque Nm	matching assembly key
07770-10	steel	66,7	-	M10	19,1	13	44,5	27,8	1,2	17,9	14,6	50,8	16,3	12,7	7,9	500	10	07770-101
07770-12	steel	66,7	-	M12	19,1	16	44,5	27,8	1,2	17,9	19,1	50,8	16,3	12,7	7,9	700	25	07770-101
07770-16	steel	96,8	70	M16	22,2	19	63,5	38,5	0,8	22,6	23,8	88,9	23,1	-	12,7	1500	50	07770-201
07770-20	steel	96,8	70	M20	25,4	22	63,5	38,5	0,8	22,6	30,2	88,9	23,1	-	12,7	2000	80	07770-201
07770-110	stainless steel	66,7	-	M10	19,1	13	44,5	27,8	1,2	17,9	14,6	50,8	16,3	12,7	7,9	250	10	07770-101
07770-112	stainless steel	66,7	-	M12	19,1	16	44,5	27,8	1,2	17,9	19,1	50,8	16,3	12,7	7,9	350	25	07770-101
07770-116	stainless steel	96,8	70	M16	22,2	19	63,5	38,5	0,8	22,6	23,8	88,9	23,1	-	12,7	750	50	07770-201
07770-120	stainless steel	96,8	70	M20	25,4	22	63,5	38,5	0,8	22,6	30,2	88,9	23,1	-	12,7	1000	80	07770-201

Assembly key

Order No.	L1	L2	L3	SW	SW1
07770-101	14	16,3	17,5	24	1/4“
07770-201	16,5	23,1	28,6	32	3/8“

Flip-Flop hoist rings

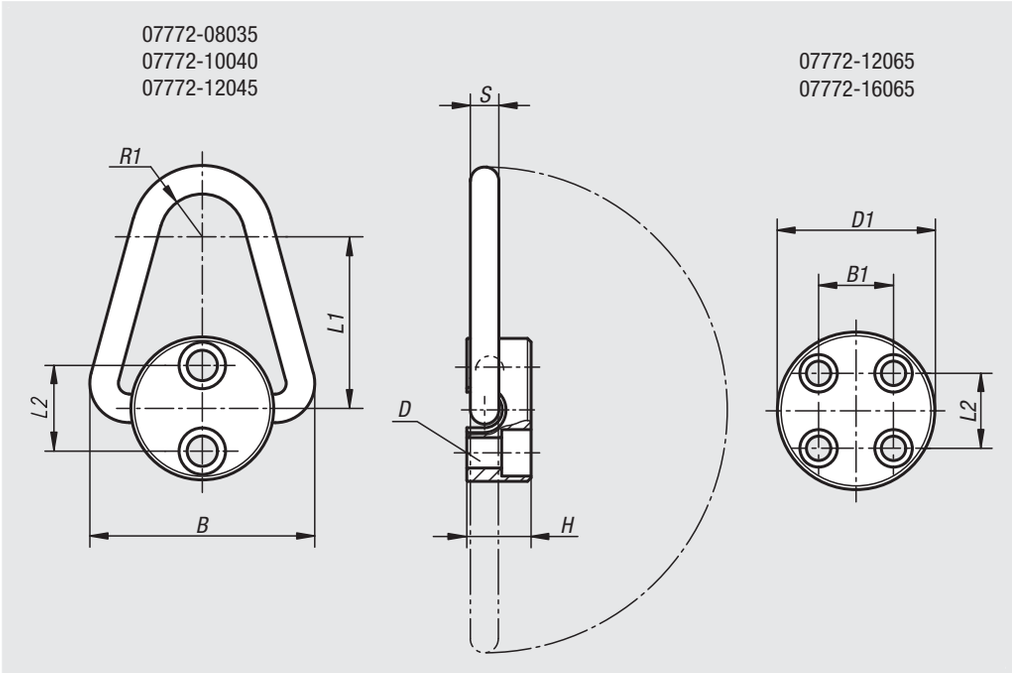

Material:
Body carbon steel. Bracket steel.

Version:
Black oxidised. Bracket hardened.

Sample order:
nlm 07772-08035

Note:
Every hoist ring undergoes an additional visual inspection after load testing (6x safety factor).
A safety data sheet for installation is included with every hoist ring.
Do not use spacer washers between the bush flange and support beam.
Tighten the screws to the stated torque and check and re-tighten regularly. After installation check if the ring swivels freely in both directions.
Lift with care! Avoid impacts!
In no event must the permissible load stamped on the hoist ring be exceeded.

Order No.	D for screw DIN 912	D1	B	B1	H	L1	L2	R1	S	Tightening torque Nm	max. permissible load kg
07772-08035	M8X35 (2x)	45	65	-	19	51	25,4	13	8	10	900
07772-10040	M10X40 (2x)	57	81	-	22	64	28,6	16	10	15	1100
07772-12045	M12X45 (2x)	64	100	-	29	76	38,1	19	13	35	2250
07772-12065	M12X65 (4x)	80	130	31,8	35	102	41,3	22	19	45	5400
07772-16065	M16X65 (4x)	92	160	31,8	48	127	52,4	25,4	25,4	100	9000

Hoist rings

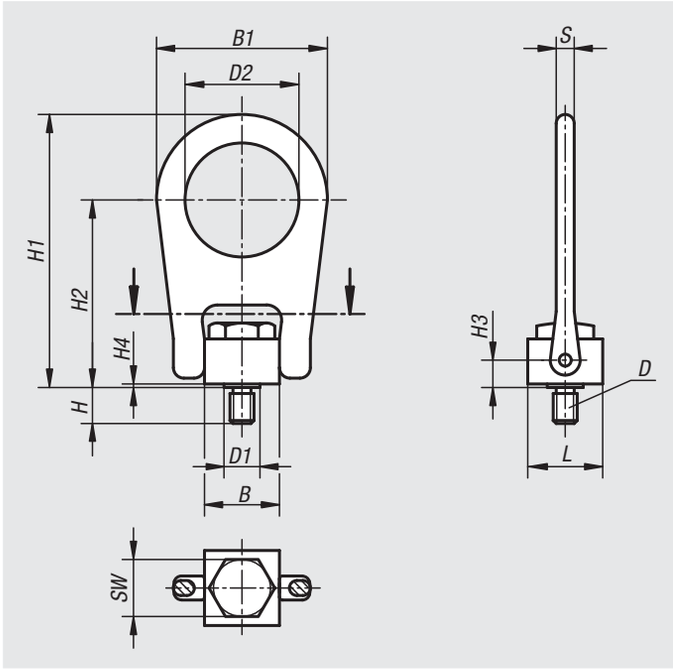

Material:
Carbon steel.

Version:
Black oxidised.

Sample order:
nlm 07774-10

Note:
Every hoist ring undergoes an additional visual inspection after load testing (5x safety factor).
A safety data sheet for installation is included with every hoist ring.
Do not use spacer washers between the bush flange and support surface.
Tighten the screws to the stated torque and check and re-tighten regularly. After installation check if the ring swivels freely in both directions.
Lift with care! Avoid impacts!
In no event must the permissible load stamped on the hoist ring be exceeded.

Order No.	B	B1	D	D1	D2	H	H1	H2	H3	H4	L	S	SW	max. permissible load kg	Tightening torque Nm
07774-08	25,4	57,2	M8	12,7	38,1	12	91,3	62,7	8,7	1,2	25,4	6,3	19	400	10
07774-10	25,4	57,2	M10	12,7	38,1	15	91,3	62,7	8,7	1,2	25,4	6,3	19	450	17
07774-12	50,8	112,7	M12	25,4	76,2	18	161,9	101,6	14,3	1,6	38,1	19	32	1050	37
07774-16	50,8	112,7	M16	25,4	76,2	24	161,9	101,6	14,3	1,6	38,1	19	32	1900	80
07774-20	50,8	112,7	M20	25,4	76,2	30	161,9	101,6	14,3	1,6	38,1	19	32	2150	134

Swivel bales

Material:
Carbon steel.

Version:
Black oxidised.

Sample order:
nlm 07775-10

Note:
Every swivel bale is load tested to 5x safety factor. The flat and light design make this swivel bale easier to use than similar swivel bales. The swivel bale is installed using a spanner or hexagon key depending on type.

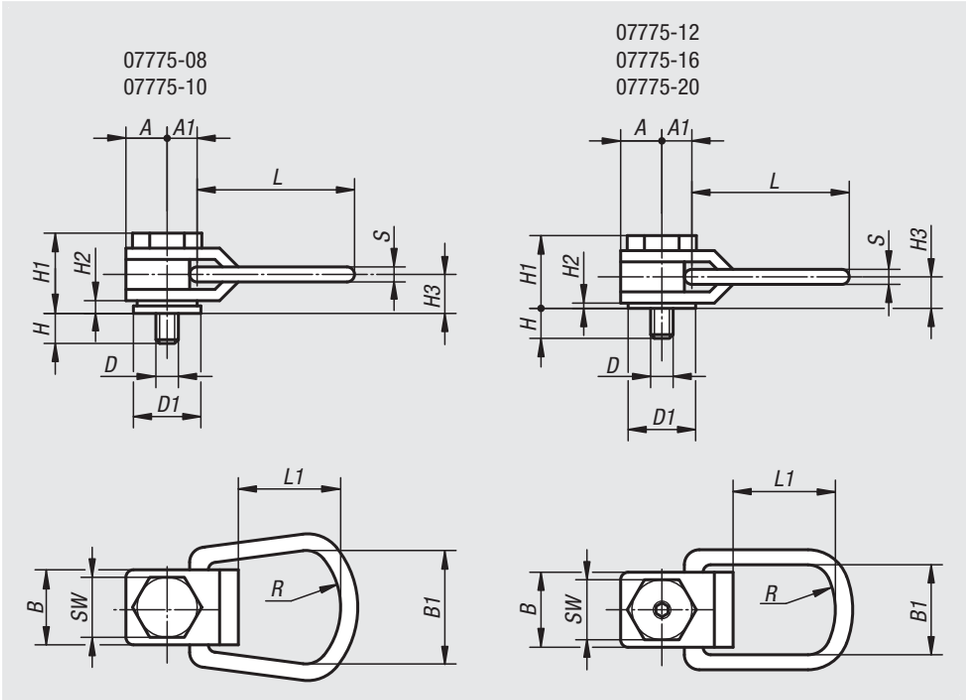

Order No.	A	A1	B	B1	D	D1	H	H1	H2	H3	L	L1	R	S	SW	hexagon socket	max. permissible load kg
07775-08	13	13	25	44	M8	21	16	33	3	14	76	52	25	8	19	-	325
07775-10	13	13	25	44	M10	21	20	33	3	14	76	52	25	8	19	-	500
07775-12	22	19	44	51	M12	35	24	48	4	21	110	75	38	13	32	6	725
07775-16	22	19	44	51	M16	35	32	48	4	21	110	75	38	13	32	8	1400
07775-20	29	25	57	67	M20	48	40	59	6	26	145	102	51	16	44	10	2290

Lifting pins

self-locking

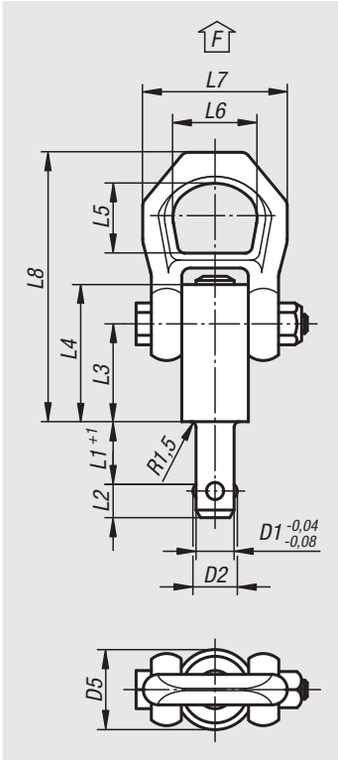

Material:
Steel.
Push button in aluminium.

Version:
Steel, manganese phosphate treated.

Sample order:
nlm 07780-2110X50

Note:
Self-locking lifting pins are quick and easy lifting devices with swing shackles.
The ball are unlocked by pressing the push button. After releasing the push button the ball is securely locked.
Corrosion protected.

TÜV tested.

Values X min, F1, F2 and F3 with 5x safety factor.

Temperature range:
max. +250 °C.

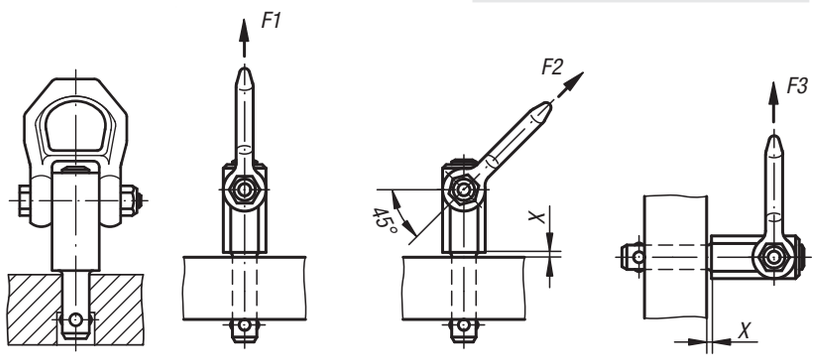

Order No.	D1	D2	D5	L1	L2	L3	L4	L5	L6	L7	L8	X min.	X max.	Receiving hole H11	F1 kN	F2 kN	F3 kN
07780-2108X10	8	9,35	21,5	10	8,75	25,7	36	27	30	49	87,5	1,5	5	8	1,5	1,2	0,5
07780-2108X15	8	9,35	21,5	15	8,75	25,7	36	27	30	49	87,5	1,5	10	8	1,5	1,2	0,5
07780-2108X25	8	9,35	21,5	25	8,75	25,7	36	27	30	49	87,5	1,5	15	8	1,5	1,2	0,5
07780-2108X35	8	9,35	21,5	35	8,75	25,7	36	27	30	49	87,5	1,5	15	8	1,5	1,2	0,5
07780-2110X15	10	11,7	21,5	15	10,2	25,7	36	27	30	49	87,5	1,5	10	10	2,7	2,4	2,1
07780-2110X25	10	11,7	21,5	25	10,2	25,7	36	27	30	49	87,5	1,5	10	10	2,7	2,4	2,1
07780-2110X35	10	11,7	21,5	35	10,2	25,7	36	27	30	49	87,5	1,5	10	10	2,7	2,4	2,1
07780-2110X50	10	11,7	21,5	50	10,2	25,7	36	27	30	49	87,5	1,5	10	10	2,7	2,4	2,1
07780-2112X15	12	14,2	21,5	15	11	25,7	36	27	30	49	87,5	1,5	10	12	3,5	3,2	2,8
07780-2112X25	12	14,2	21,5	25	11	25,7	36	27	30	49	87,5	1,5	15	12	3,5	3,2	2,8
07780-2112X35	12	14,2	21,5	35	11	25,7	36	27	30	49	87,5	1,5	15	12	3,5	3,2	2,8
07780-2112X50	12	14,2	21,5	50	11	25,7	36	27	30	49	87,5	1,5	15	12	3,5	3,2	2,8
07780-2516X25	16	18,6	25	25	15,1	31	44,5	27	30	49	92,8	1,5	15	16	4,8	4,5	4,1
07780-2516X50	16	18,6	25	50	15,1	31	44,5	27	30	49	92,8	1,5	35	16	4,8	4,5	4,1
07780-2516X75	16	18,6	25	75	15,1	31	44,5	27	30	49	92,8	1,5	40	16	4,8	4,5	4,1
07780-2520X50	20	24,5	30	50	19,7	36,5	52	32,6	36	56	114	1,5	25	20	10	8,5	6,5
07780-2520X75	20	24,5	30	75	19,7	36,5	52	32,6	36	56	114	1,5	30	20	10	8,5	6,5

Lifting pins

self-locking, stainless steel

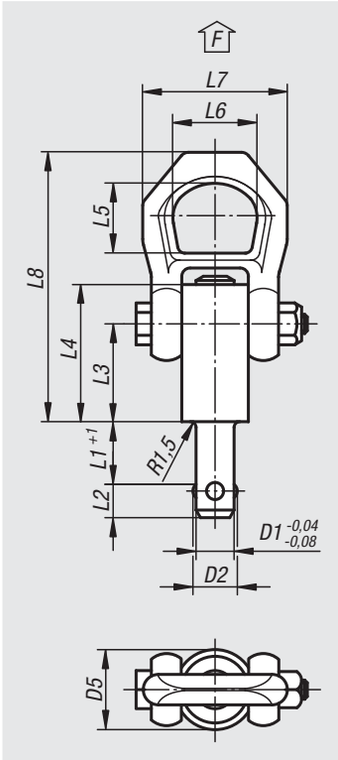

Material:
Pin stainless steel 1.4542.
Shackle stainless steel 1.4571.
Push button aluminium.

Version:
Pin hardened.

Sample order:
nlm 07780-12110X50

Note:
Ball lifting pins are quick and simple lifting devices with swing shackles.
The balls are unlocked by pressing the push button.
After releasing the push button, the ball is securely locked.
– Protected against corrosion and weather-resistant
– High-strength, hardened, extremely durable pin.
– TÜV-tested.

Values X min., F1, F2 and F3 with 5x safety factor.

Temperature range:
max. +250 °C.

Accessories:
Receiver bushes 07781.

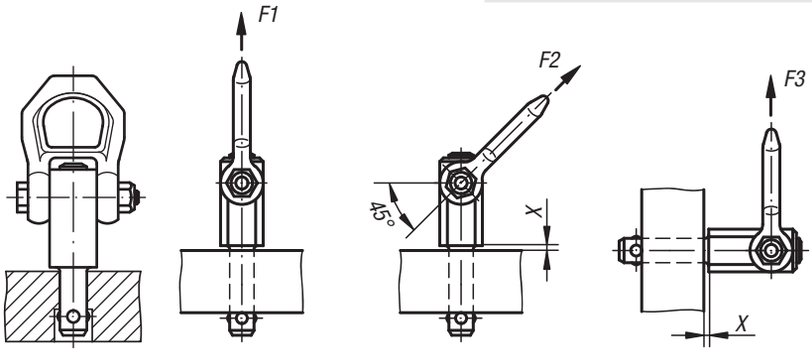

Order No.	D1	D2	D5	L1	L2	L3	L4	L5	L6	L7	L8	X min.	X max.	Receiving hole H11	F1 kN	F2 kN	F3 kN
07780-12108X10	8	9,35	21,5	10	8.75	25,7	36	27	30	49	87,5	1,5	5	8	1.5	1,2	0.5
07780-12108X15	8	9,35	21,5	15	8.75	25,7	36	27	30	49	87,5	1,5	10	8	1.5	1,2	0.5
07780-12108X25	8	9,35	21,5	25	8.75	25,7	36	27	30	49	87,5	1,5	15	8	1.5	1,2	0.5
07780-12108X35	8	9,35	21,5	35	8.75	25,7	36	27	30	49	87,5	1,5	15	8	1.5	1,2	0.5
07780-12110X15	10	11,7	21,5	15	10,2	25,7	36	27	30	49	87,5	1,5	10	10	2,7	2,4	2,1
07780-12110X25	10	11,7	21,5	25	10,2	25,7	36	27	30	49	87,5	1,5	10	10	2,7	2,4	2,1
07780-12110X35	10	11,7	21,5	35	10,2	25,7	36	27	30	49	87,5	1,5	10	10	2,7	2,4	2,1
07780-12110X50	10	11,7	21,5	50	10,2	25,7	36	27	30	49	87,5	1,5	10	10	2,7	2,4	2,1
07780-12112X15	12	14,2	21,5	15	11	25,7	36	27	30	49	87,5	1,5	10	12	3,5	3,2	2,8
07780-12112X25	12	14,2	21,5	25	11	25,7	36	27	30	49	87,5	1,5	15	12	3,5	3,2	2,8
07780-12112X35	12	14,2	21,5	35	11	25,7	36	27	30	49	87,5	1,5	15	12	3,5	3,2	2,8
07780-12112X50	12	14,2	21,5	50	11	25,7	36	27	30	49	87,5	1,5	15	12	3,5	3,2	2,8
07780-12516X25	16	18,6	25	25	15,1	31	44,5	27	30	49	92,8	1,5	15	16	4,8	4,5	4,1
07780-12516X50	16	18,6	25	50	15,1	31	44,5	27	30	49	92,8	1,5	35	16	4,8	4,5	4,1
07780-12516X75	16	18,6	25	75	15,1	31	44,5	27	30	49	92,8	1,5	40	16	4,8	4,5	4,1
07780-13020X50	20	24,5	30	50	19,7	36,5	52	32,6	36	56	114	1,5	25	20	10	8,5	6,5
07780-13020X75	20	24,5	30	75	19,7	36,5	52	32,6	36	56	114	1,5	30	20	10	8,5	6,5

Receiver bushes

for ball lifting pins, stainless steel

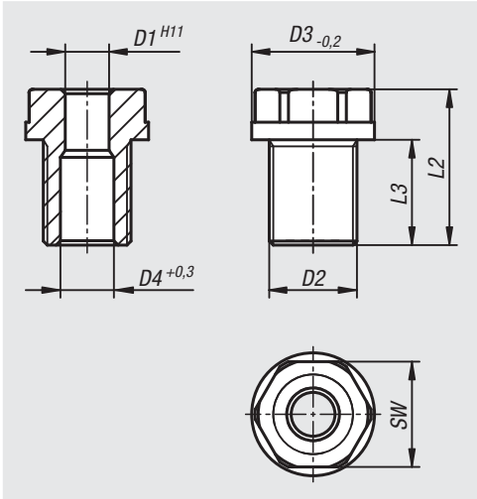

Material:
Stainless steel 1.4542

Version:
Hardened.

Sample order:
nlm 07781-0810

Note:
The receiver bush is for quick and safe insertion of ball operated lifting pins. They offer an easy and reliable installation in a variety of lifting materials. Also for use with thin walled materials and blind holes.
They are corrosion resistant with low wearing.

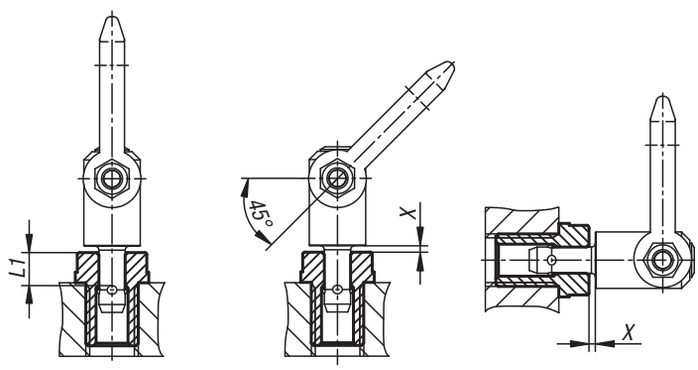

Order No.	D1	D2	D3	D4	L1	L2	L3	X	SW	Tightening torque Nm
07781-0810	8	M16x1,5	24	9,8	10	27,5	20	1.5	19	90
07781-0815	8	M16x1,5	24	9,8	15	27,5	20	1.5	19	90
07781-0825	8	M16	24	9,8	25	37,5	25	1.5	19	75
07781-0835	8	M16	24	9,8	35	47,5	35	1.5	19	75
07781-1015	10	M20x1,5	28	12,2	15	35,5	24	1.5	24	145
07781-1025	10	M20x1,5	28	12,2	25	35,5	24	1.5	24	145
07781-1035	10	M20	28	12,2	35	46	29	1.5	24	130
07781-1050	10	M20	28	12,2	50	65	49	1.5	24	130
07781-1215	12	M24x1,5	32	14,7	15	35,5	24	1.5	27	220
07781-1225	12	M24x1,5	32	14,7	25	36,5	24	1.5	27	220
07781-1235	12	M24	32	14,7	35	48.5	36	1.5	27	200
07781-1250	12	M24	32	14,7	50	72.5	60	1.5	27	200
07781-1625	16	M30x2	39	19,2	25	44	29	1.5	30	440
07781-1650	16	M30	39	19,2	50	66	44	1.5	30	400
07781-1675	16	M30	39	19,2	75	96	74	1.5	30	400
07781-2050	20	M36x2	43	26	50	70	55	1.5	36	440
07781-2075	20	M36x2	43	26	75	95	80	1.5	36	440

Locating bushes

for ball lifting pins stainless steel, flat

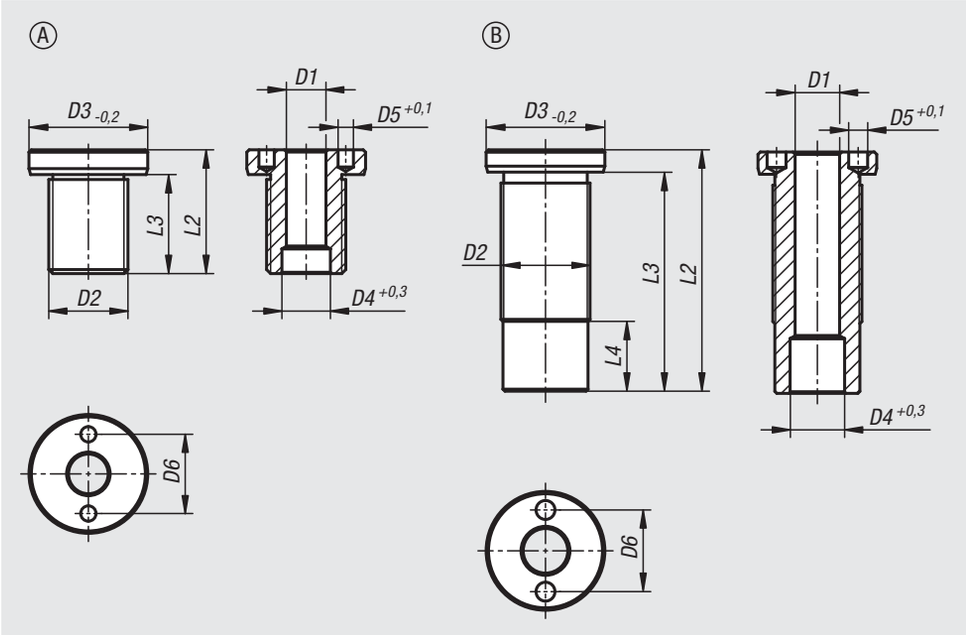

Material:
Stainless steel 1.4542

Version:
Hardened.

Sample order:
nlm 07781-10810

Note:
The locating bushes offer a safe and quick option for holding the ball lifting pins. They ensure that installation in a range of supporting materials can be carried out easily and reliably. Can also be used with thin-walled parts and blind holes.
This version is suitable for applications which require a flat surface after having been screwed in.
They are corrosion-resistant and do not wear easily.

Accessories:
Adjustable face pin spanner 96651.

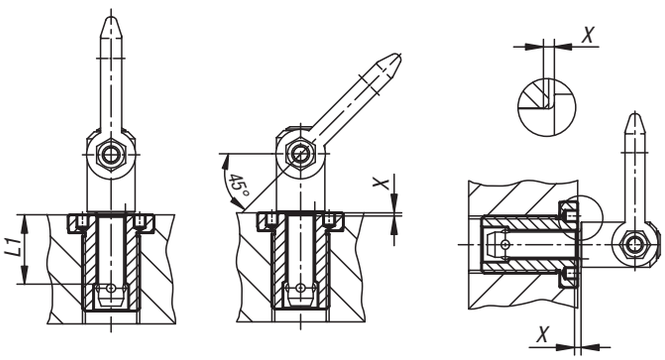

Order No.	Form	D1	D2	D3	D4	D5	D6	L1	L2	L3	L4	X	Tightening torque Nm	Order No. assembly key
07781-10810	A	8	M16x1,5	24	9,8	3,1	16	10	25	20	-	1.5	75	96651-08
07781-10815	A	8	M16x1,5	24	9,8	3,1	16	15	25	20	-	1.5	75	96651-08
07781-10825	A	8	M16	24	9,8	3,1	16	25	35	30	-	1.5	75	96651-08
07781-10835	A	8	M16	24	9,8	3,1	16	35	45	40	-	1.5	75	96651-08
07781-11015	A	10	M20x1,5	28	12,2	5,1	20	15	30	24	-	1.5	100	96651-08
07781-11025	A	10	M20x1,5	28	12,2	5,1	20	25	35	29	-	1.5	100	96651-08
07781-11035	A	10	M20	28	12,2	5,1	20	35	45	39	-	1.5	100	96651-08
07781-11050	A	10	M20	28	12,2	5,1	20	50	60	54	-	1.5	100	96651-08
07781-11215	A	12	M24x1,5	32	14,7	5,1	22	15	32	26	-	1.5	150	96651-08
07781-11225	A	12	M24x1,5	32	14,7	5,1	22	25	40	34	-	1.5	150	96651-08
07781-11625	A	16	M30x2	39	19,2	5,1	30	25	45	39	-	1.5	200	96651-16
07781-11235	B	12	M24	32	14,7	5,1	22	35	50	44	3,8	1.5	150	96651-08
07781-11250	B	12	M24	32	14,7	5,1	22	50	65	59	18,8	1.5	150	96651-08
07781-11650	B	16	M30	39	19,2	5,1	30	50	65	59	6	1.5	200	96651-16
07781-11675	B	16	M30	39	19,2	5,1	30	75	90	84	31	1.5	200	96651-16
07781-12050	B	20	M36x2	43	26	5,1	30	50	70	63	3,5	1.5	200	96651-16
07781-12075	B	20	M36x2	43	26	5,1	30	75	95	88	28,5	1.5	200	96651-16

Lifting pins

self-locking, stainless steel

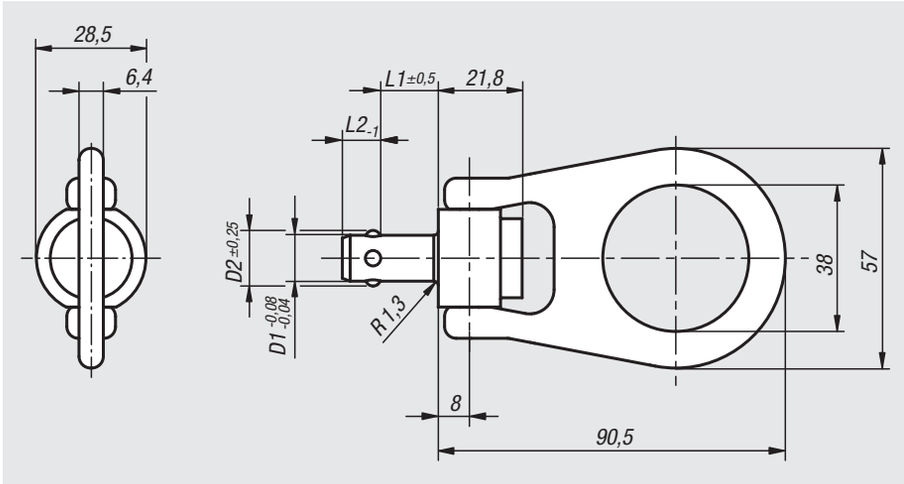

Material:
Pin and shackle stainless steel 1.4542;
Push button stainless steel 1.4305;
Ball stainless steel 1.4125;
Spring stainless steel 1.4310

Version:
Pin and balls hardened and passivated

Sample order:
nlm 07782-2812X15
(include length L1)

Note:
Quick and easy lifting device with swing shackle and safety bar against unintended release. The balls are unlocked by pressing the push button. When the push button is released the balls are securely locked.

Corrosion and weather resistant.
High tensile, hardened pin for extreme loads with the high wear resistance. Temperature range max. 250 °C.

CE certified.

Values X max, and F1 with 5x safety factor.

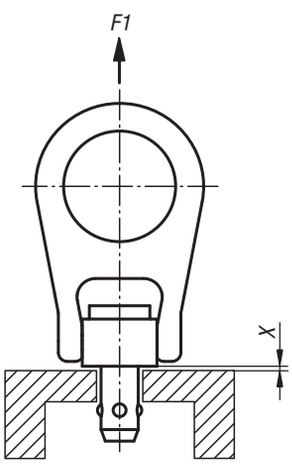

Order No.	D1	D2	L1	L2	X max.	F1 kN	Receiving hole
07782-2810X	10	12	15/20/25/30/35/40/75	9	1,5	4,4	10 +0,1
07782-2812X	12	14,27	15/20/25/30/35/40/50/75/100	10	1,5	5,5	12 +0,1
07782-2816X	16	19	15/20/25/30/35/40/50/75/100	14	1,5	6,2	16 +0,1

Receiver bush

stainless steel, for lifting pins

Material:
Stainless steel 1.4542

Version:
Hardened and passivated.

Sample order:
nlm 07784-1015

Note:
The receiver bush is for quick and safe insertion of ball operated lifting pins. They offer an easy and reliable installation in a variety of lifting materials. Also for use with thin walled materials and blind holes.
They are corrosion resistant with low wearing.

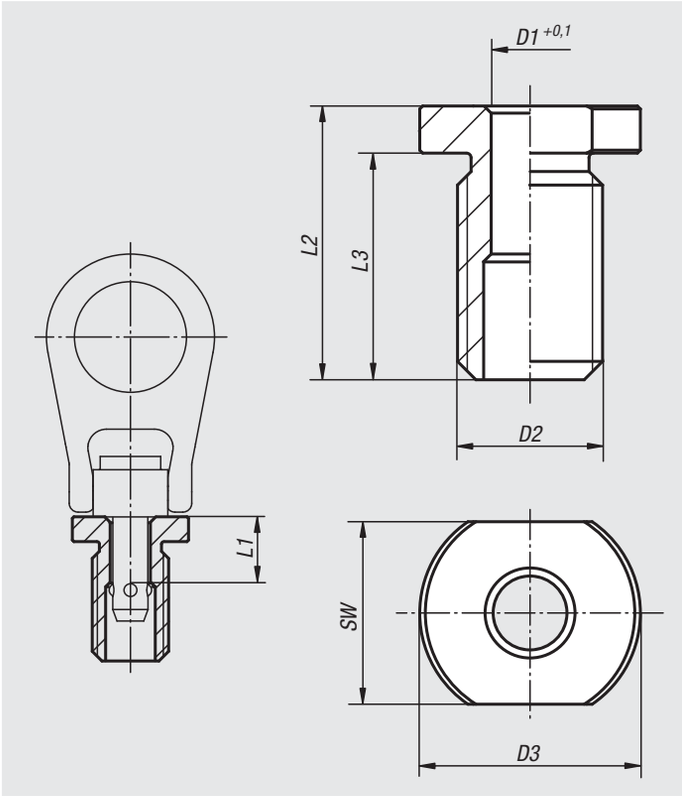

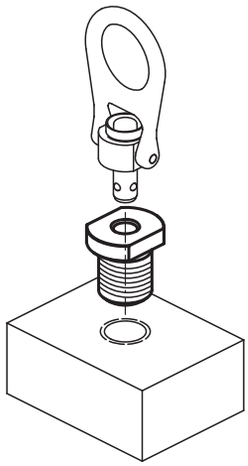

Order No.	D1	D2	D3	L1	L2	L3	SW	Tightening torque Nm	Suitable for
07784-1015	10	M20x2,5	34,8	15	29	22	26	36	07780-2110x15 / 07782-2810x15
07784-1215	12	M22x2,5	34,8	15	37	28	30	50	07780-2112x15 / 07782-2812x15
07784-1615	16	M27x3	41,2	15	41	31	32	69	07782-2816X15

Lifting bolts with ring lock

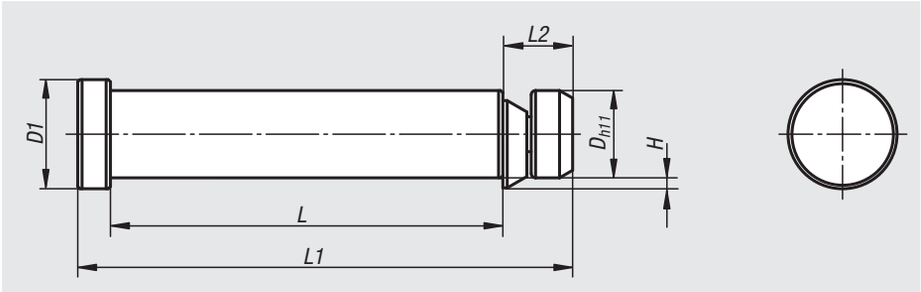

Material:
Bolts, ring nut and safety ring:
Ø 12, 16 and 20 = 16MnCrS5 1.7139
Ø 25 and 32 = 42CrMoS4 1.7227
strip spring: CK75 1.1248

Version:
Black oxidised.

Sample order:
nlm 07790-12055

Note:
The lifting bolts are used for safely hoisting loads with the aid of end flanges similar to VDI 3366. Recommended tolerance for mounting hole is H13.

The retaining ring is compelled into position by a spring band - the lifting bolt can only be released by conscious movement of the retaining ring.

With CE marking.

Detailed operating instructions are included.

Order No.	D	D1	L	L1	L2	H min.	max. permissible load kg
07790-12055	12	15	55	69	10	1,2	300
07790-16072	16	20	72	89	13	1,6	600
07790-20090	20	25	90	113	16	2,1	900
07790-25115	25	32	115	143	20	3	2000
07790-32145	32	40	145	180	25	3,5	3200

Slip hooks

grade 10

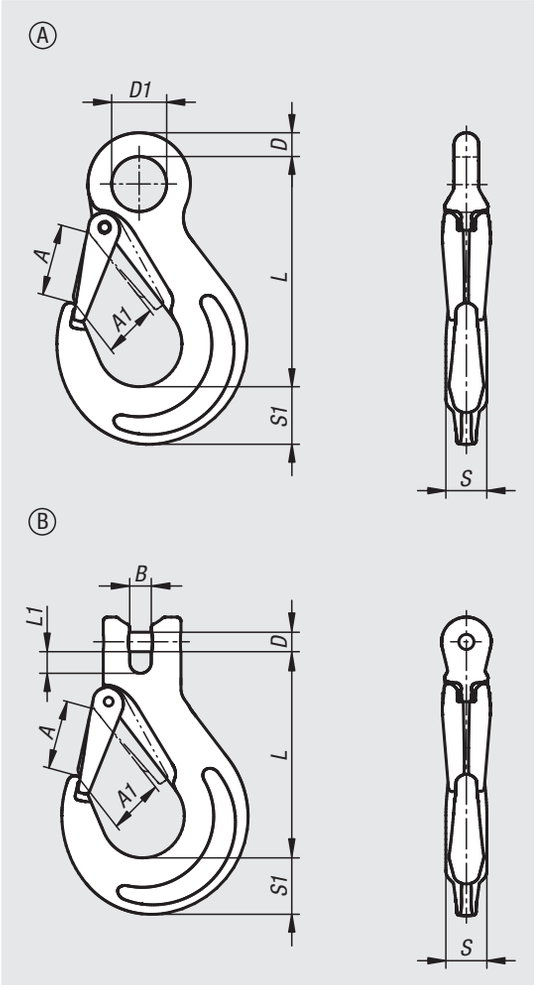

Material:
Steel.

Version:
Grade 10.
Plastic-coated, red.
Latch forged and galvanized.

Sample order:
nlm 07791-11001400

Note:
Slip hooks with forged latch.

The hooks correspond to the Machinery Directive and are BG certified (H stamp).

Temperature range:
From -40°C to 200°C = 100% permissible load
Up to 300°C = 90% permissible load
Up to 400°C = 75% permissible load

Drawing reference:
Form A: eye hook.
Form B: clevis hook.

Order No.	Version	Form	for chain mm	A	A1	B	D	D1	L	L1	S	S1	Permissible load kg
07791-11001400	eye hook	A	6	26	19	-	10	20,5	85	-	16	20	1400
07791-11002500	eye hook	A	7-8	33	26	-	11	25	105	-	19	29	2500
07791-11004000	eye hook	A	10	40	31	-	16	34	131	-	26	33	4000
07791-11006700	eye hook	A	13	51	40	-	19	43	163	-	33	45	6700
07791-11010000	eye hook	A	16	66	45	-	24,5	50	183	-	40	50	10000
07791-21001400	clevis hook	B	6	26	19	7,2	7,5	-	69	8	15	20	1400
07791-21001900	clevis hook	B	7	34	26	9,5	9	-	95	10	19	28	1900
07791-21002500	clevis hook	B	8	34	26	9,5	10	-	95	10	19	28	2500
07791-21004000	clevis hook	B	10	40	31	12	13	-	110	13,5	25	33	4000
07791-21006700	clevis hook	B	13	51	40	15	16	-	136	17	30	40	6700
07791-21010000	clevis hook	B	16	56	45	18	20	-	155	22	37	48	10000

Self-locking hooks

grade 10

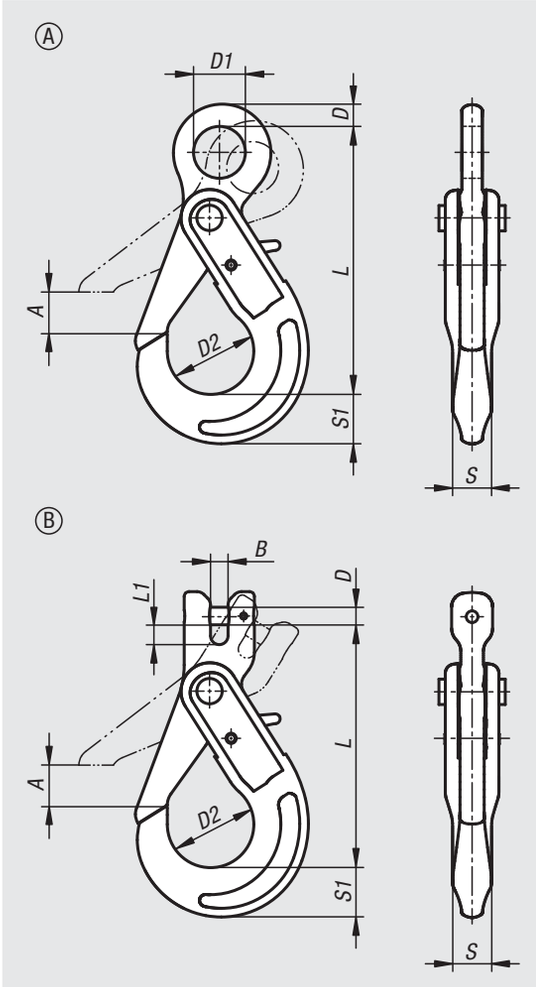

Material:
Steel.

Version:
Grade 10.
Plastic-coated, red.

Sample order:
nlm 07792-11001400

Note:
When lifting the load, the safety latch closes automatically and is securely locked by a locking mechanism at the rear of the hook. To open the latch, the locking mechanism must be unlocked manually.

The hooks correspond to the Machinery Directive and are BG certified (H stamp).

Temperature range:
From -40°C to 200°C = 100% permissible load
Up to 300°C = 90% permissible load
Up to 400°C = 75% permissible load

Drawing reference:
Form A: eye hook.
Form B: clevis hook.

Order No.	Version	Form	for chain mm	A	B	D	D1	D2	L	L1	S	S1	Permissible load kg
07792-11001400	eye hook	A	6	28	-	11	21	35	109	-	16	21	1400
07792-11002500	eye hook	A	7-8	34	-	12	25	43	135	-	20	26	2500
07792-11004000	eye hook	A	10	45	-	16	33	56	168	-	25	30	4000
07792-11006700	eye hook	A	13	51	-	20	40	69	205	-	35	40	6700
07792-11010000	eye hook	A	16	60	-	27	50	80	251	-	36	50	10000
07792-21001400	clevis hook	B	6	28	7	7,5	-	35	94	8	16	21	1400
07792-21001900	clevis hook	B	7	34	9	9	-	43	123	10	20	26	1900
07792-21002500	clevis hook	B	8	34	9	10	-	43	123	10	20	26	2500
07792-21004000	clevis hook	B	10	45	12	13	-	56	143	14	25	30	4000
07792-21006700	clevis hook	B	13	51	15	16	-	69	180	17	35	40	6700
07792-21010000	clevis hook	B	16	60	19	21	-	80	215	19	36	50	10000

Shortening hooks

grade 10

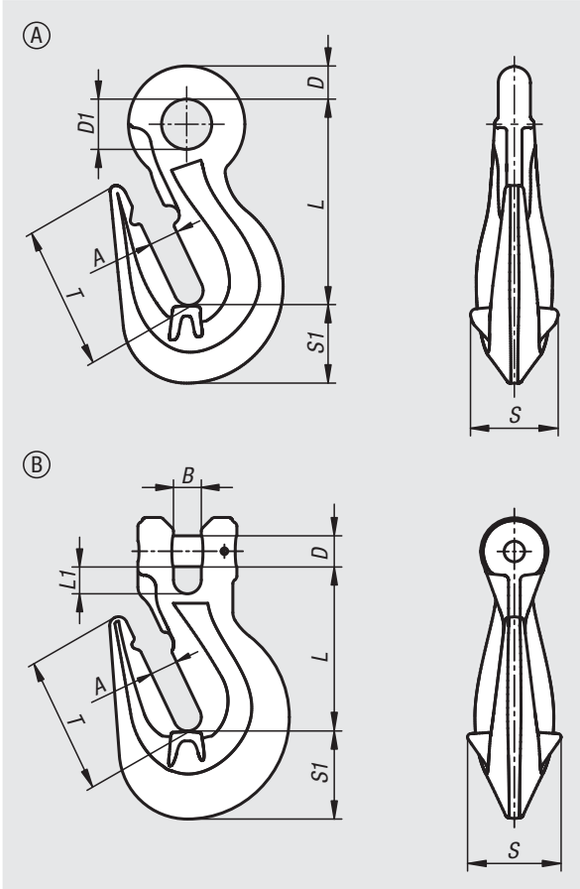

Material:
Steel.

Version:
Grade 10.
Plastic-coated, red.

Sample order:
nlm 07793-11001400

Note:
The shortening hook is for incorporating into single or multiple strand chains and is used to shorten the chain.

Shortening hooks are permissible for lifting, but not for lashing since they do not have a latch to prevent unintentional unhooking.

The shortening hooks correspond to the Machinery Directive and are BG certified (H stamp).

Temperature range:
From -40°C to 200°C = 100% permissible load
Up to 300°C = 90% permissible load
Up to 400°C = 75% permissible load

Drawing reference:
Form A: eye hook.
Form B: clevis hook.

Order No.	Version	Form	for chain mm	A	B	D	D1	L	L1	S	S1	T	Permissible load kg
07793-11001400	eye hook	A	6	8	-	8,5	12	51,5	-	22	22	35,5	1400
07793-11002500	eye hook	A	7-8	10	-	11	17	69	-	30	28	47	2500
07793-11004000	eye hook	A	10	13	-	15	22	86,5	-	44	34	55	4000
07793-11006700	eye hook	A	13	17	-	18	26	110,5	-	53	47	81	6700
07793-11010000	eye hook	A	16	19	-	21	32	129	-	64	60	92	10000
07793-21001400	clevis hook	B	6	8	8	7,5	-	51	8,8	22	22	36	1400
07793-21001900	clevis hook	B	7	10	10	9	-	66	11	30	28	47	1900
07793-21002500	clevis hook	B	8	10	10	10	-	65	11	30	28	47	2500
07793-21004000	clevis hook	B	10	13	13	13	-	80	15	44	34	55	4000
07793-21006700	clevis hook	B	13	17	17	16	-	105	18	53	47	81	6700
07793-21010000	clevis hook	B	16	19	19	21	-	112	18	64	60	92	10000

Swivel hooks

grade 10

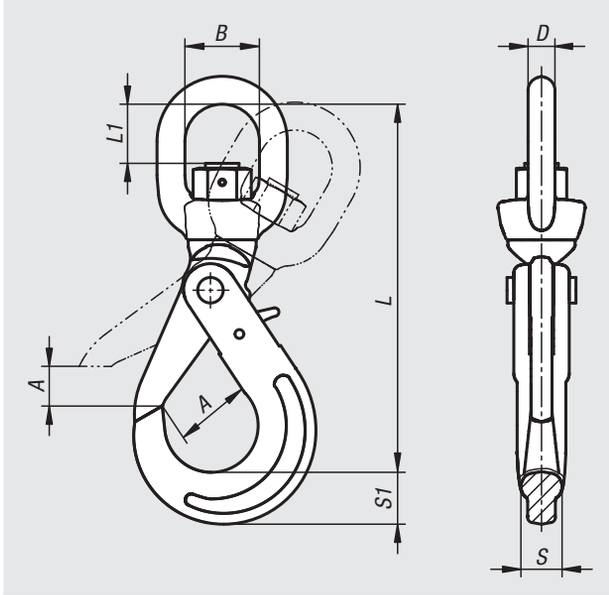

Material:
Steel.

Version:
Grade 10.
Plastic-coated, red.

Sample order:
nlm 07794-11001400

Note:
Fitted with smooth-running plain bearings. Not suitable for swivelling while under load.

When lifting the load, the safety latch closes automatically and is securely locked by a locking mechanism at the rear of the hook. To open the latch, the locking mechanism must be unlocked manually.

The swivel hooks correspond to the Machinery Directive and are BG certified (H stamp).

Temperature range:
From -40°C to 200°C = 100% permissible load
Up to 300°C = 90% permissible load
Up to 400°C = 75% permissible load

Order No.	for chain mm	A	B	D	L	L1	S	S1	Permissible load kg
07794-11001400	6	28	36	13	158	27	16	21	1400
07794-11002500	7-8	34	36	13	182	27	20	26	2500
07794-11004000	10	45	42	16	217	35	25	30	4000
07794-11006700	13	54	50	21	271	43	35	40	6700
07794-11010000	16	62	62	24	320	58	38	50	10000

Connecting links

grade 10

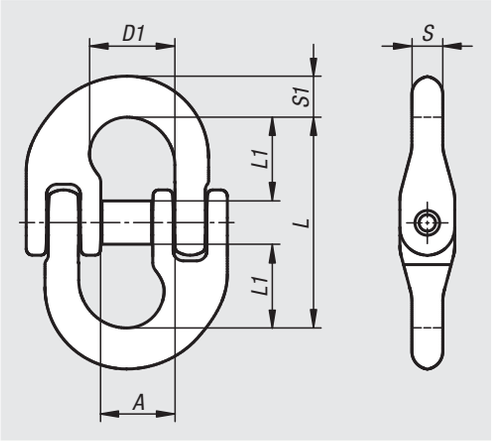

Material:
Steel.

Version:
Grade 10.
Plastic-coated, red.

Sample order:
nlm 07795-1001400

Note:
The connecting links are inserted as a coupling link in a chain sling between suspension link/chain, chain/chain or load hook/ chain.

The connecting links correspond to the Machinery Directive and are BG certified (H stamp).

Temperature range:
From -40°C to 200°C = 100% permissible load
Up to 300°C = 90% permissible load
Up to 400°C = 75% permissible load

Order No.	for chain mm	A	D1	L	L1	S	S1	Permissible load kg
07795-1001400	6	14	18	45	18	7,5	8	1400
07795-1001900	7	17,8	20,5	50,5	20	9	10,2	1900
07795-1002500	8	19	23,5	62	25,5	10	11,5	2500
07795-1004000	10	23,8	27,5	72	30	12,6	12,6	4000
07795-1006700	13	28	33,3	87,3	36	16,7	19	6700
07795-1010000	16	34,3	39,5	102	40,5	20,6	20,6	10000

Round sling hooks

grade 8

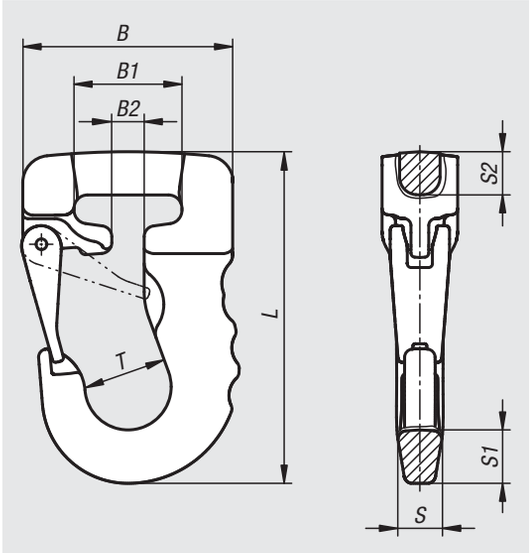

Material:
Steel.

Version:
Grade 8.
Plastic-coated.

Sample order:
nlm 07796-801000

Note:
Round sling hooks for quick suspension of textile lifting equipment such as hoist belts or round slings. The round sling hook is fitted with a robust, forged safety latch. All edges are rounded to protect the textile slings.

The colour of the round sling hook corresponds to the colour code assigned to textile lifting equipment that signifies the permissible loads.

The round sling hooks correspond to the Machinery Directive and are BG certified (H stamp).

Temperature range:
From -40°C to 200°C = 100% permissible load
Up to 300°C = 90% permissible load
Up to 400°C = 75% permissible load

Order No.	Main colour	B	B1	B2	L	S	S1	S2	T	Permissible load kg
07796-801000	violet	78	41	12	123	17	20	16	31	1000
07796-802000	green	91	44	19	148	21	26	17	40	2000
07796-803000	yellow	113	55	21	175	25	32	25	50	3000
07796-804000	grey	133	76	40	223	36	40	36	59,5	4000
07796-805000	red	133	76	40	223	36	40	36	59,5	5000
07796-806000	brown	133	76	40	223	36	40	36	59,5	6000
07796-808000	blue	185	100	50	317	45	63	55	80	8000
07796-810000	orange	185	100	50	317	45	63	55	80	10000

Round sling links

grade 8

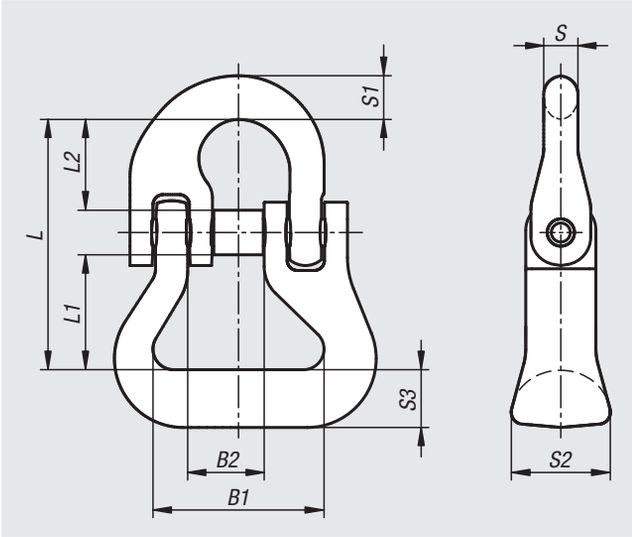

Material:
Steel.

Version:
Grade 8.
Plastic-coated, red.

Sample order:
nlm 07797-802000

Note:
For joining hoist belts or round slings to chain components such as chain links or suspension rings.

The round sling links correspond to the Machinery Directive and are BG certified (H stamp).

Temperature range:
From -40°C to 200°C = 100% permissible load
Up to 300°C = 90% permissible load
Up to 400°C = 75% permissible load

Order No.	for chain mm	B1	B2	L	L1	L2	S	S1	S2	S3	Permissible load kg
07797-802000	7-8	40	19	58	27	20	9	10	24	14	2000
07797-803150	10	40	25	77	34	30	11	13	30	12	3150
07797-805300	13	55	28	96	44	36	16	16	36	16	5300
07797-808000	16	67	36	115	53	40	21	21	44	24	8000

Shaft collars set screw

DIN 705, steel

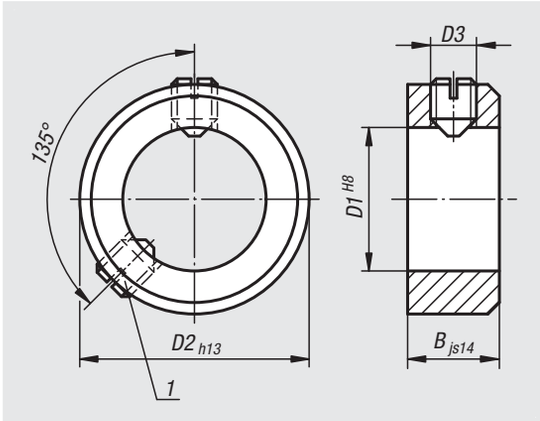

Material:
Steel.

Version:
Bright.

Sample order:
nlm 07800-100301

Note:
Form A: with grub screw DIN 553 (recess)
Form E: with grub screw DIN 914 (hexagon socket)

Drawing reference:
1) Second grub screw from D1 ≥ 75

Order No. Form A	Order No. Form E	D1	B	D2	D3 set screw
07800-100301	07800-300301	3	5	7	M2x3
07800-100401	07800-300401	4	5	8	M2,5x3
07800-100501	07800-300501	5	6	10	M3x4
07800-100601	07800-300601	6	8	12	M4x5
07800-100701	07800-300701	7	8	12	M4x5
07800-100801	07800-300801	8	8	16	M4x6
07800-100901	07800-300901	9	10	18	M5x8
07800-101001	07800-301001	10	10	20	M5x8
07800-101101	07800-301101	11	10	20	M5x8
07800-101201	07800-301201	12	12	22	M6x8
07800-101401	07800-301401	14	12	25	M6x8
07800-101501	07800-301501	15	12	25	M6x8
07800-101601	07800-301601	16	12	28	M6x8
07800-101801	07800-301801	18	14	32	M6x8
07800-102001	07800-302001	20	14	32	M6x8
07800-102401	07800-302401	24	16	40	M8x12
07800-102501	07800-302501	25	16	40	M8x10
07800-102601	07800-302601	26	16	40	M8x10
07800-102801	07800-302801	28	16	45	M8x12
07800-103001	07800-303001	30	16	45	M8x10
07800-103201	07800-303201	32	16	50	M8x12
07800-103501	07800-303501	35	16	56	M8x12

Order No. Form A	Order No. Form E	D1	B	D2	D3 grub screw
07800-103601	07800-303601	36	16	56	M8x12
07800-103801	07800-303801	38	16	56	M8x12
07800-104001	07800-304001	40	18	63	M10x16
07800-104201	07800-304201	42	18	63	M10x16
07800-104501	07800-304501	45	18	70	M10x16
07800-104801	07800-304801	48	18	70	M10x16
07800-105001	07800-305001	50	18	80	M10x16
07800-105201	07800-305201	52	18	80	M10x16
07800-105501	07800-305501	55	18	80	M10x16
07800-105601	07800-305601	56	18	80	M10x16
07800-105801	07800-305801	58	20	90	M10x16
07800-106001	07800-306001	60	20	90	M10x16
07800-106301	07800-306301	63	20	90	M10x16
07800-106501	07800-306501	65	20	100	M10x20
07800-106801	07800-306801	68	20	100	M10x20
07800-107001	07800-307001	70	20	100	M10x20
07800-107201	07800-307201	72	22	110	M10x20
07800-107501	07800-307501	75	22	110	M12x20
07800-108001	07800-308001	80	22	110	M12x20
07800-108501	07800-308501	85	22	125	M12x25
07800-109001	07800-309001	90	22	125	M12x20
07800-110001	07800-310001	100	25	140	M12x25

Shaft collars set screw

DIN 705, stainless steel

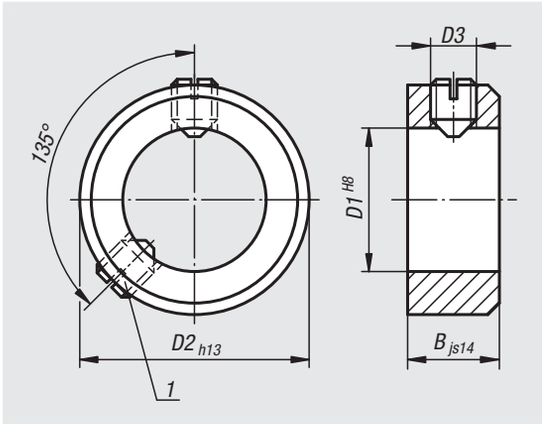

Material:
Stainless steel 1.4305.

Version:
Bright.

Sample order:
nlm 07800-100302

Note:
Form A: with grub screw DIN 553 (recess)
Form E: with grub screw DIN 914 (hexagon socket)

Drawing reference:
1) Second grub screw from D1 ≥ 75

Order No. Form A	Order No. Form E	D1	B	D2	D3 set screw
07800-100302	07800-300302	3	5	7	M2x3
07800-100402	07800-300402	4	5	8	M2,5x3
07800-100502	07800-300502	5	6	10	M3x4
07800-100602	07800-300602	6	8	12	M4x5
07800-100702	07800-300702	7	8	12	M4x5
07800-100802	07800-300802	8	8	16	M4x6
07800-100902	07800-300902	9	10	18	M5x8
07800-101002	07800-301002	10	10	20	M5x8
07800-101102	07800-301102	11	10	20	M5x8
07800-101202	07800-301202	12	12	22	M6x8
07800-101402	07800-301402	14	12	25	M6x8
07800-101502	07800-301502	15	12	25	M6x8
07800-101602	07800-301602	16	12	28	M6x8
07800-101802	07800-301802	18	14	32	M6x8
07800-102002	07800-302002	20	14	32	M6x8
07800-102402	07800-302402	24	16	40	M8x12
07800-102502	07800-302502	25	16	40	M8x10
07800-102602	07800-302602	26	16	40	M8x10
07800-102802	07800-302802	28	16	45	M8x12
07800-103002	07800-303002	30	16	45	M8x10
07800-103202	07800-303202	32	16	50	M8x12
07800-103502	07800-303502	35	16	56	M8x12

Order No. Form A	Order No. Form E	D1	B	D2	D3 grub screw
07800-103602	07800-303602	36	16	56	M8x12
07800-103802	07800-303802	38	16	56	M8x12
07800-104002	07800-304002	40	18	63	M10x16
07800-104202	07800-304202	42	18	63	M10x16
07800-104502	07800-304502	45	18	70	M10x16
07800-104802	07800-304802	48	18	70	M10x16
07800-105002	07800-305002	50	18	80	M10x16
07800-105202	07800-305202	52	18	80	M10x16
07800-105502	07800-305502	55	18	80	M10x16
07800-105602	07800-305602	56	18	80	M10x16
07800-105802	07800-305802	58	20	90	M10x16
07800-106002	07800-306002	60	20	90	M10x16
07800-106302	07800-306302	63	20	90	M10x16
07800-106502	07800-306502	65	20	100	M10x20
07800-106802	07800-306802	68	20	100	M10x20
07800-107002	07800-307002	70	20	100	M10x20
07800-107202	07800-307202	72	22	110	M10x20
07800-107502	07800-307502	75	22	110	M12x20
07800-108002	07800-308002	80	22	110	M12x20
07800-108502	07800-308502	85	22	125	M12x25
07800-109002	07800-309002	90	22	125	M12x20
07800-110002	07800-310002	100	25	140	M12x25

Shaft collars one-piece

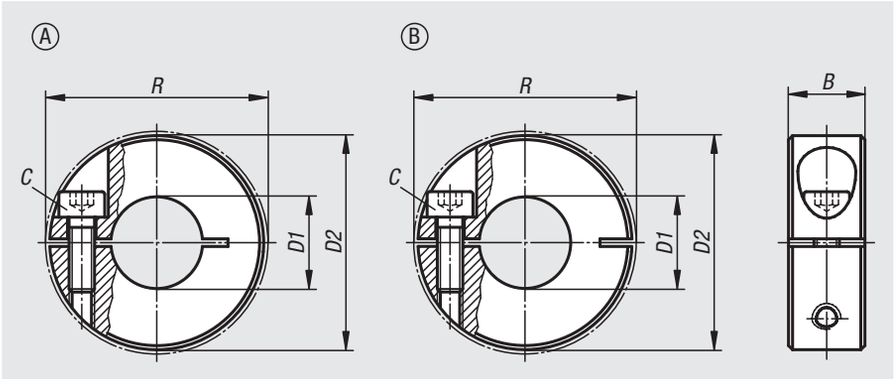

Material:
Steel 1.0718
Stainless steel 1.4305
Aluminium.

Version:
Steel black oxidised, screw steel 12.9.
Stainless steel bright, screw stainless steel A2-70.
Aluminium bright, screw stainless steel A2-70.

Sample order:
nlm 07810-01001

Note:
One-piece shaft collars surround the shaft with a uniformly distributed clamping force. This leads to a dimensionally precise fit and very high retaining forces without damaging the shaft.

The shaft tolerance should lie within h11.

Form A: Standard shaft collar.
Form B: Shaft collar with a ca. 15% higher clamping force than the standard version by the same tightening torque on the locking screw. The bore remains cylindrical which means that the shaft is precisely enclosed. Less imbalance.

Temperature range:
-40 °C to +175 °C.

On request:
Other dimensions.

Order No. steel	Order No. stainless steel	Order No. aluminium	Form	B	C (DIN 912)	D1	D2	R
07810-00401	07810-00402	07810-00403	A	9	M3x8	4	16	20,7
07810-00501	07810-00502	07810-00503	A	9	M3x8	5	16	20,7
07810-00601	07810-00602	07810-00603	A	9	M3x8	6	16	20,7
07810-00801	07810-00802	07810-00803	A	9	M3x8	8	18	22,4
07810-01001	07810-01002	07810-01003	A	9	M3x10	10	24	26
07810-01201	07810-01202	07810-01203	A	11	M4x12	12	28	31,8
07810-01501	07810-01502	07810-01503	A	13	M5x16	15	34	39,4
07810-01601	07810-01602	07810-01603	A	13	M5x16	16	34	39,4
07810-01801	07810-01802	07810-01803	A	13	M5x16	18	36	41,1
07810-02001	07810-02002	07810-02003	A	15	M6x18	20	40	46,4
07810-02201	07810-02202	07810-02203	A	15	M6x18	22	42	48,1
07810-02501	07810-02502	07810-02503	A	15	M6x18	25	45	50,8
07810-02801	07810-02802	07810-02803	A	15	M6x18	28	48	53,7
07810-03001	07810-03002	07810-03003	A	15	M6x18	30	54	58,6
07810-04001	07810-04002	07810-04003	A	15	M6x18	40	60	65
07810-05001	07810-05002	07810-05003	A	19	M8x25	50	78	87
07810-100401	07810-100402	07810-100403	B	9	M3x8	4	16	20,7
07810-100501	07810-100502	07810-100503	B	9	M3x8	5	16	20,7
07810-100601	07810-100602	07810-100603	B	9	M3x8	6	16	20,7
07810-100801	07810-100802	07810-100803	B	9	M3x8	8	18	22,4
07810-101001	07810-101002	07810-101003	B	9	M3x10	10	24	26
07810-101201	07810-101202	07810-101203	B	11	M4x12	12	28	31,8
07810-101501	07810-101502	07810-101503	B	13	M5x16	15	34	39,4
07810-101601	07810-101602	07810-101603	B	13	M5x16	16	34	39,4
07810-101801	07810-101802	07810-101803	B	13	M5x16	18	36	41,1
07810-102001	07810-102002	07810-102003	B	15	M6x18	20	40	46,4
07810-102201	07810-102202	07810-102203	B	15	M6x18	22	42	48,1
07810-102501	07810-102502	07810-102503	B	15	M6x18	25	45	50,8
07810-102801	07810-102802	07810-102803	B	15	M6x18	28	48	53,7
07810-103001	07810-103002	07810-103003	B	15	M6x18	30	54	58,6
07810-104001	07810-104002	07810-104003	B	15	M6x18	40	60	65
07810-105001	07810-105002	07810-105003	B	19	M8x25	50	78	87

Shaft collar

one-piece, with clamping lever

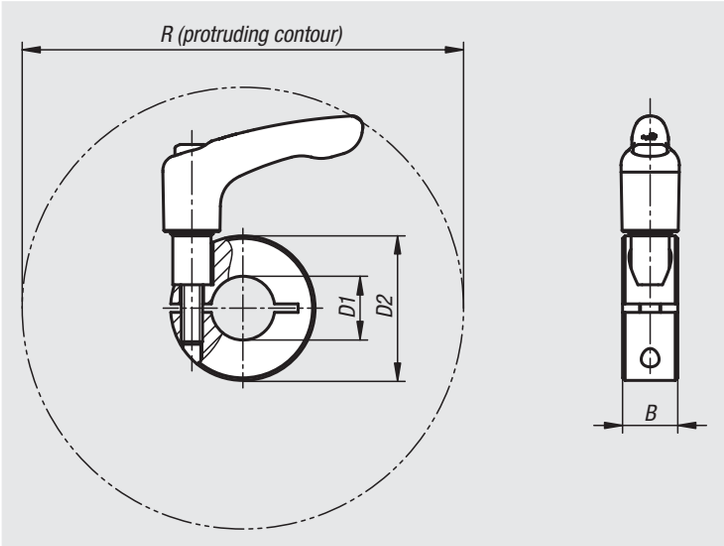

Material:
Steel 1.0718.
Stainless steel 1.4305.

Version:
Steel black oxidised.
Stainless steel bright.
Insert stainless-steel.

Sample order:
nlm 07810-11001

Note:
One-piece shaft collars surround the shaft with an equal distribution of the clamping force. This leads to a very precise fit and high retaining force without damaging the shaft.

The shaft tolerance should lie within h11.

On request:
Other dimensions.

Order No. steel	Order No. stainless steel	B	D1	D2	R
07810-11001	**07810-11002**	9	10	24	44,1
07810-11201	**07810-11202**	11	12	28	90,4
07810-11501	**07810-11502**	13	15	34	105
07810-11601	**07810-11602**	13	16	34	105
07810-11801	**07810-11802**	13	18	36	105,7
07810-12001	**07810-12002**	15	20	40	103,8
07810-12201	**07810-12202**	15	22	42	104,2
07810-12501	**07810-12502**	15	25	45	104,8
07810-12801	**07810-12802**	15	28	48	106,8
07810-13001	**07810-13002**	15	30	54	112,6
07810-14001	**07810-14002**	15	40	60	113,2
07810-15001	**07810-15002**	19	50	78	150,2

Shaft collars one-piece

wide

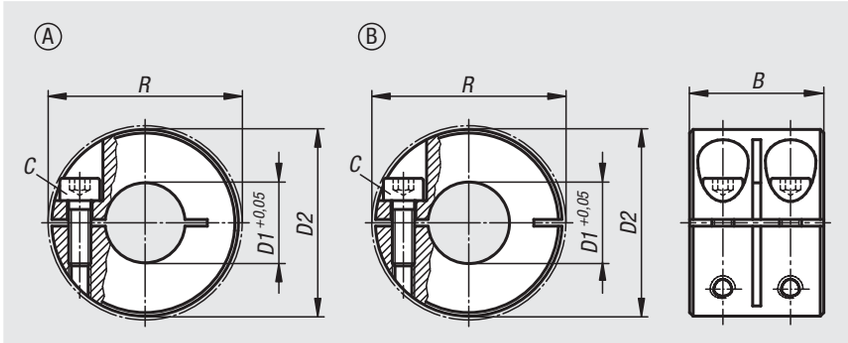

Material:
Steel 1.0718.
Stainless steel 1.4305.

Version:
Steel black oxidised.
Screw 12.9 steel.
Stainless steel brig.ht
Screw A2-70 stainless-steel.

Sample order:
nlm 07811-01201

Note:
One-piece shaft collars surround the shaft with a uniformly distributed clamping force. This leads to a dimensionally precise fit and very high retaining forces without damaging the shaft.

The shaft tolerance should lie within h11.

Form A: Standard shaft collar.
Form B: Shaft collar with a ca. 15% higher clamping force than the standard version by the same tightening torque on the locking screw. The bore remains cylindrical which means that the shaft is precisely enclosed. Less imbalance.

Temperature range:
-40 °C to +175 °C.

On request:
Other dimensions.

Order No. steel	Order No. stainless steel	Form	B	C (DIN 912)	D1	D2	R
07811-00801	**07811-00802**	A	20	M3x8	8	18	22,4
07811-01001	**07811-01002**	A	20	M3x10	10	24	26
07811-01201	**07811-01202**	A	24	M4x12	12	28	31,8
07811-01601	**07811-01602**	A	29	M5x16	16	34	39,4
07811-02001	**07811-02002**	A	33	M6x18	20	40	46,4
07811-02501	**07811-02502**	A	33	M6x18	25	45	50,8
07811-03001	**07811-03002**	A	33	M6x18	30	54	58,6
07811-04001	**07811-04002**	A	33	M6x18	40	60	65
07811-05001	**07811-05002**	A	41	M8x25	50	78	87
07811-100801	**07811-100802**	B	20	M3x8	8	18	22,4
07811-101001	**07811-101002**	B	20	M3x10	10	24	26
07811-101201	**07811-101202**	B	24	M4x12	12	28	31,8
07811-101601	**07811-101602**	B	29	M5x16	16	34	39,4
07811-102001	**07811-102002**	B	33	M6x18	20	40	46,4
07811-102501	**07811-102502**	B	33	M6x18	25	45	50,8
07811-103001	**07811-103002**	B	33	M6x18	30	54	58,6
07811-104001	**07811-104002**	B	33	M6x18	40	60	65
07811-105001	**07811-105002**	B	41	M8x25	50	78	87

Shaft collars two-piece

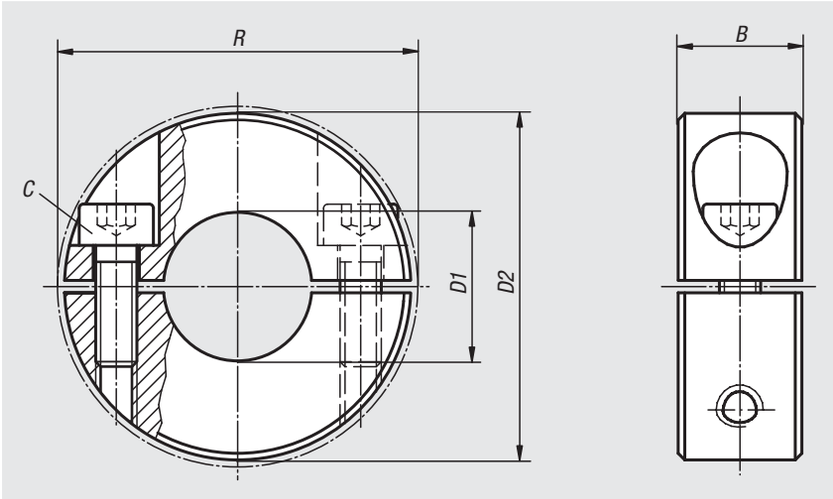

Material:
Steel 1.0718
Stainless steel 1.4305
Aluminium.

Version:
Steel black oxidised, screw steel 12.9.
Stainless steel bright, screw stainless steel A2-70.
Aluminium bright, screw stainless steel A2-70.

Sample order:
nlm 07812-01001

Note:
Two-piece shaft collars surround the shaft with a uniformly distributed clamping force. This leads to a dimensionally precise fit and very high retaining forces without damaging the shaft.

The shaft tolerance should lie within h11.

Two-piece shaft collars can be quickly and easily mounted or removed without dismantling other components.

Temperature range:
-40 °C to +175 °C.

On request:
Other dimensions.

Order No. steel	Order No. stainless steel	Order No. aluminium	B	C (DIN 912)	D1	D2	R
07812-00401	**07812-00402**	**07812-00403**	9	M3x8	4	16	20,7
07812-00501	**07812-00502**	**07812-00503**	9	M3x8	5	16	20,7
07812-00601	**07812-00602**	**07812-00603**	9	M3x8	6	16	20,7
07812-00801	**07812-00802**	**07812-00803**	9	M3x8	8	18	22,4
07812-01001	**07812-01002**	**07812-01003**	9	M3x10	10	24	26
07812-01201	**07812-01202**	**07812-01203**	11	M4x12	12	28	31,8
07812-01501	**07812-01502**	**07812-01503**	13	M5x16	15	34	39,4
07812-01601	**07812-01602**	**07812-01603**	13	M5x16	16	34	39,4
07812-01801	**07812-01802**	**07812-01803**	13	M5x16	18	36	41,1
07812-02001	**07812-02002**	**07812-02003**	15	M6x18	20	40	46,4
07812-02201	**07812-02202**	**07812-02203**	15	M6x18	22	42	48,1
07812-02501	**07812-02502**	**07812-02503**	15	M6x18	25	45	50,8
07812-02801	**07812-02802**	**07812-02803**	15	M6x18	28	48	53,7
07812-03001	**07812-03002**	**07812-03003**	15	M6x18	30	54	58,6
07812-04001	**07812-04002**	**07812-04003**	15	M6x18	40	60	65
07812-05001	**07812-05002**	**07812-05003**	19	M8x25	50	78	87

Shaft collars two-piece

wide

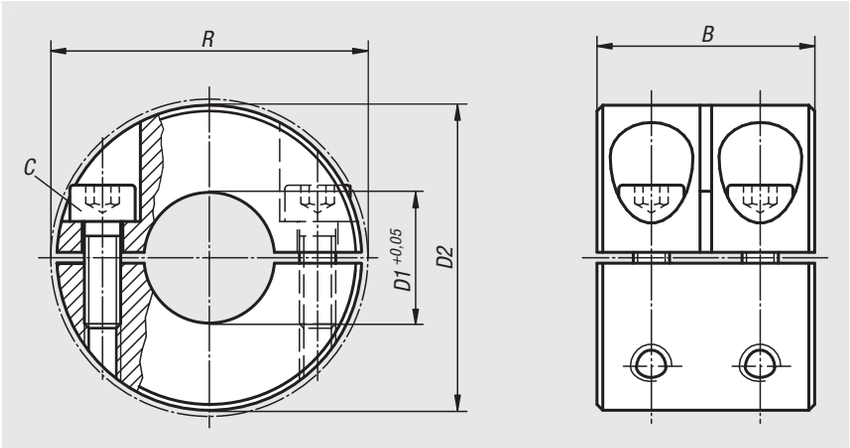

Material:
Steel 1.0718.
Stainless steel 1.4305.

Version:
Steel black oxidised.
Screw 12.9 steel.
Stainless steel brig.ht
Screw A2-70 stainless-steel.

Sample order:
nlm 07813-00801

Note:
One-piece shaft collars surround the shaft with a uniformly distributed clamping force. This leads to a dimensionally precise fit and very high retaining forces without damaging the shaft.

The shaft tolerance should lie within h11.

Temperature range:
-40 °C to +175 °C.

On request:
Other dimensions.

Order No. steel	Order No. stainless steel	B	C	D1	D2	R
07813-00801	**07813-00802**	20	M3x8	8	18	22,4
07813-01001	**07813-01002**	20	M3x10	10	24	26
07813-01201	**07813-01202**	24	M4x12	12	28	31,8
07813-01601	**07813-01602**	29	M5x16	16	34	39,4
07813-02001	**07813-02002**	33	M6x18	20	40	46,4
07813-02501	**07813-02502**	33	M6x18	25	45	50,8
07813-03001	**07813-03002**	33	M6x18	30	54	58,6
07813-04001	**07813-04002**	33	M6x18	40	60	65
07813-05001	**07813-05002**	41	M8X25	50	78	87

Shaft collars

with thread

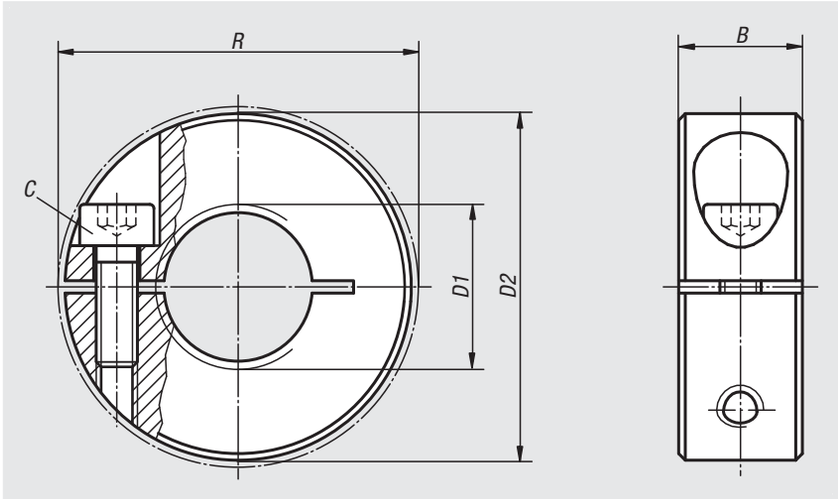

Material:
Steel 1.0718.
Stainless steel 1.4305.

Version:
Steel black oxidised.
Screw 12.9 steel.
Stainless steel brig.ht
Screw A2-70 stainless-steel.

Sample order:
nlm 07814-0601

Note:
Shaft collars with thread surround the shaft with an equal distribution of clamping forces.
The shaft collars can be used on threaded rods or shafts with a thread tolerance of 6g.

Temperature range:
-40 °C to +175 °C.

Order No. steel	Order No. stainless steel	B	C	D1	D2	R
07814-0401	**07814-0402**	9	M3x8	M4	16	20,7
07814-0501	**07814-0502**	9	M3x8	M5	16	20,7
07814-0601	**07814-0602**	9	M3x8	M6	16	20,7
07814-0801	**07814-0802**	9	M3x8	M8	18	22,4
07814-1001	**07814-1002**	9	M3x10	M10	24	26
07814-1201	**07814-1202**	11	M4x12	M12	28	31,8
07814-1601	**07814-1602**	13	M5x16	M16	34	39,4
07814-2001	**07814-2002**	15	M6x18	M20	40	46,4

Shaft collars

wide, for flat-milled shafts

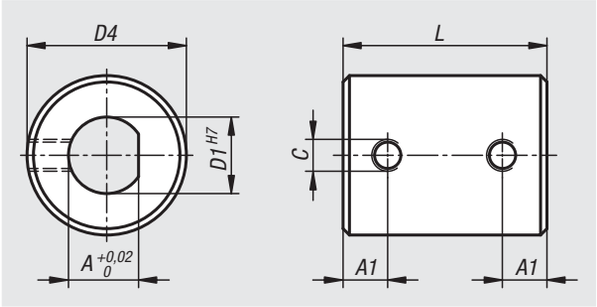

Material:
Aluminium.
Grub screw stainless steel (A2).

Version:
Bright.

Sample order:
nlm 07815-05

Note:
Shaft collars together with flat milled shafts can safely transfer very high torques without damaging the shaft.

The shaft tolerance should be within h7.

Order No.	A	A1	C	D1	D4	L
07815-05	4	5	M4x5	5	17	24
07815-06	5	5	M4x5	6	17	24
07815-10	9	7	M5x6	10	25	32
07815-12	11	7	M5x6	12	25	32
07815-16	14	8	M6x8	16	34	40
07815-18	16	8	M6x8	18	34	40
07815-20	18	10	M6x10	20	45	45
07815-22	20	10	M6x10	22	45	45
07815-25	22	10	M8x12	25	50	48

Notes

08000

Drilling jigs
Drill bushes
Jig elements

08000

Drilling plates

Material:
1.0036

Version:
Bright.

Sample order:
nlm 08000-02

Note:
Spring, pin and shim washers are supplied.

Drawing reference:
1) drill bush

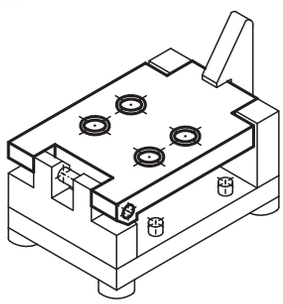

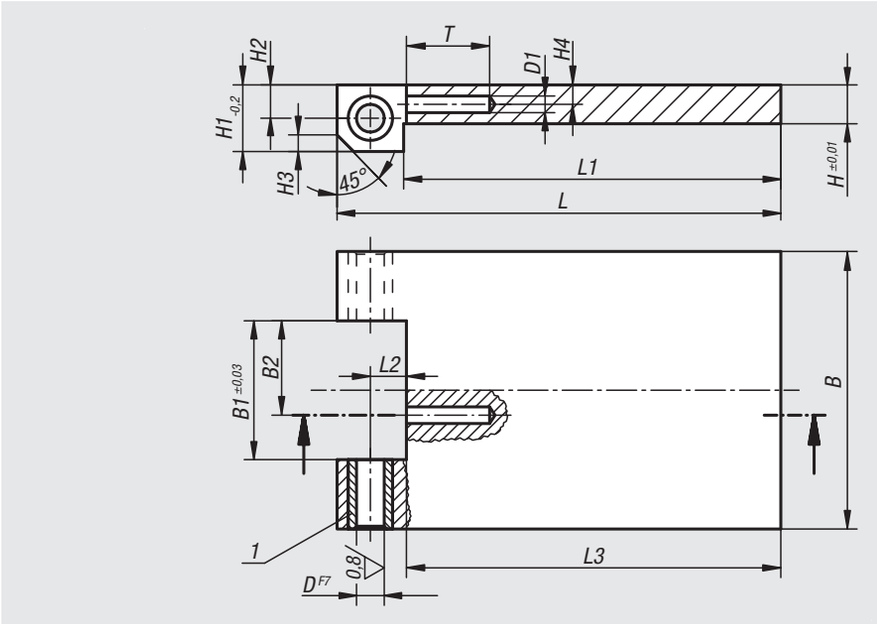

Order No.	L	L1	L2	L3	B	B1	B2	H	H1	H2	H3	H4	D	D1	T
08000-01	80	68	6,5	67,5	50	25	17	7	11,5	6	4	2,5	5	3	10
08000-02	100	84	8,5	83,5	65	32	22	9	14,5	8	5,5	3	6	3	10
08000-03	150	130	10,5	129,5	100	50	33	16	19,5	10	7,5	5	8	3	15

08050

Hinge blocks long

Material:
1.0036

Version:
Black oxidised.

Sample order:
nlm 08050-01

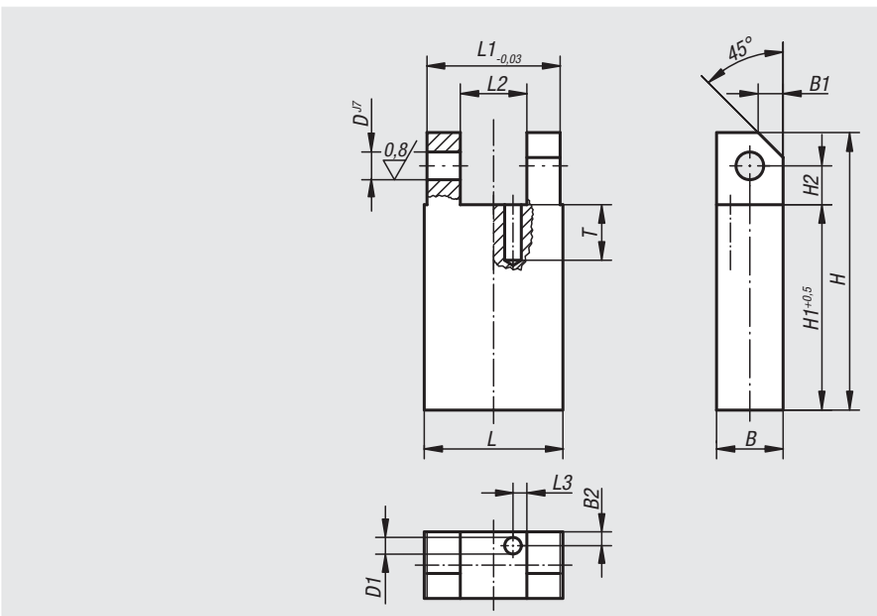

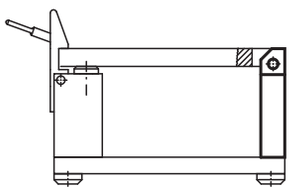

Order No.	L	L1	L2	L3	B	B1	B2	H	H1	H2	D	D1	T
08050-01	25	24	12	2,5	12	4,5	2,5	50	37	7	5	3	10
08050-02	32	31	16	2,5	16	6	2,5	63	46	9	6	3	10
08050-03	50	49	20	2,5	20	8	2,5	100	79	11	8	3	10

Hinge blocks short

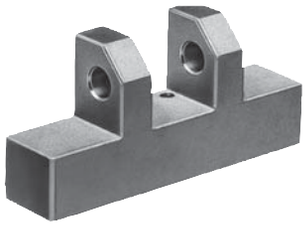

Material:
1.0036

Version:
Phosphated

Sample order:
nlm 08100-02

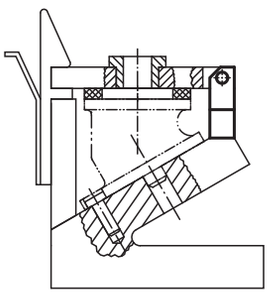

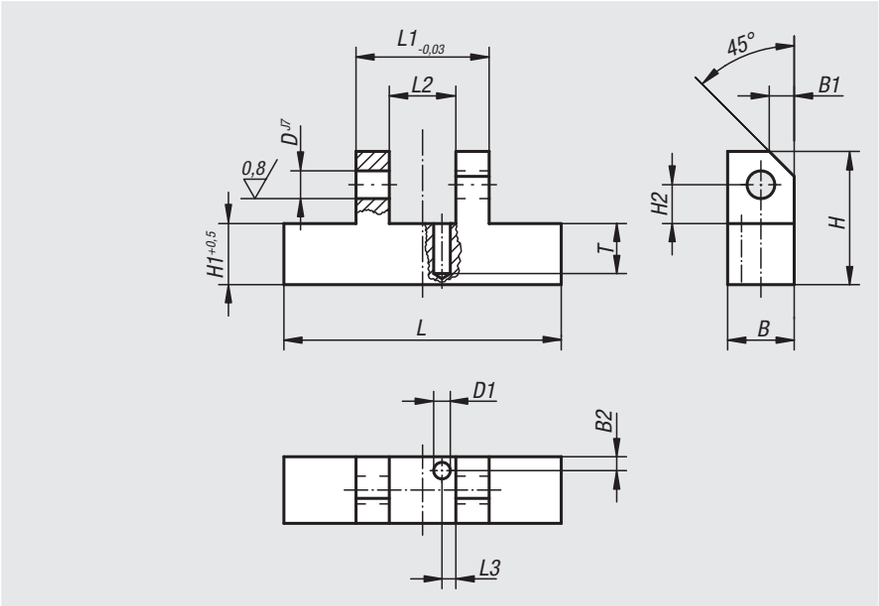

Order No.	L	L1	L2	L3	B	B1	B2	H	H1	H2	D	D1	T
08100-01	50	24	12	2,5	12	4,5	2,5	24	11	7	5	3	9
08100-02	65	31	16	2,5	15	6	2,5	30	13	9	6	3	10
08100-03	100	49	20	2,5	20	8	2,5	48	27	11	8	3	10

Notes

Latch

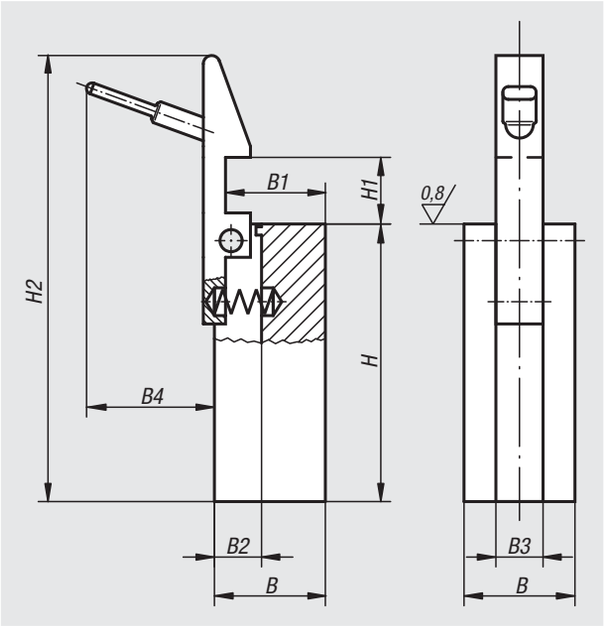

Material:
Body 1.0036, snapper 1.0503

Version:
Body phosphated, snapper black oxidised.

Sample order:
nlm 08150-01

Note:
Missing dimensions for snapper see 07560.

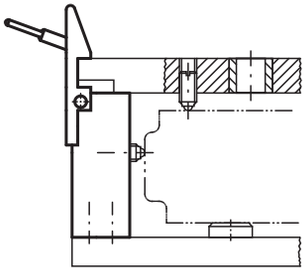

Order No.	B	B1	B2	B3	B4	H	H1	H2
08150-01	20	18	9	8,5	23	50	12	77
08150-02	30	28	11	10,5	24	63	16	99
08150-03	40	36	14	14,5	24	100	25	145

Rest pads

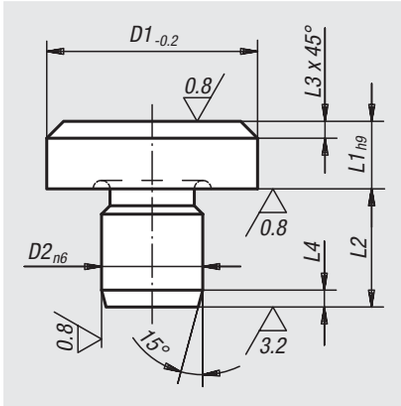

Material:
Tool steel.

Version:
Hardened and ground.
Top face without centerbore.

Sample order:
nlm 02010-041

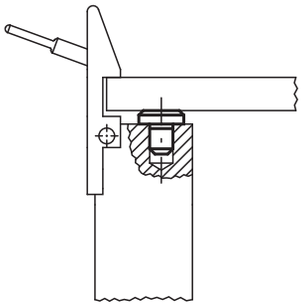

Order No.	D1	L1	D2	L2	L3	L4
02010-041	6	2,5	4	6,5	0,7	1,2
02010-042	6	4,5	4	8,5	0,7	1,2
02010-061	10	4,5	6	8,5	0,9	1,5

08180

Thrust washers

Material:
Steel.

Version:
Carbonitrided and tempered, black oxidised.
Bottom face ground.

Sample order:
nlm 08180-01

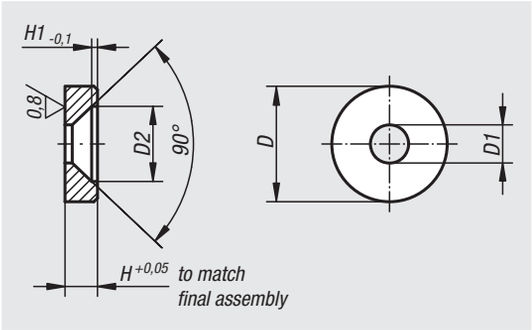

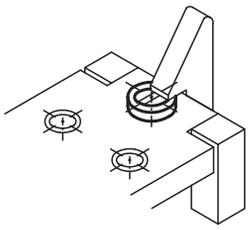

Order No.	D	D1	D2	H	H1
08180-01	12	4,3	8,3	2,5	0,4
08180-02	16	5,3	10,4	4,5	0,8

08270

Drilling plates

with short hinge block

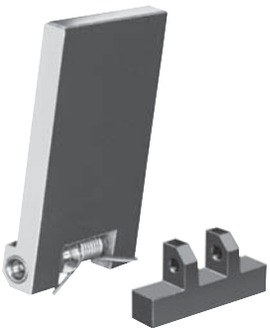

Material:
See 08000 - 08180

Sample order:
nlm 08270-01

Order No.	drilling plate	short hinge block	shim washers and pins
08270-01	08000-01	08100-01	1 set
08270-02	08000-02	08100-02	1 set
08270-03	08000-03	08100-03	1 set

Drilling plates

with long hinge block

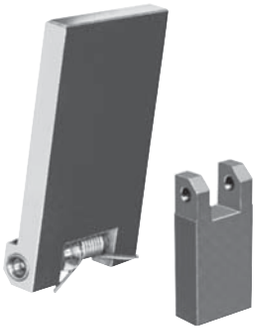

Material:
See 08000 - 08180

Sample order:
nlm 08280-02

Order No.	drilling plate	long hinge block	shim washers and pins
08280-01	08000-01	08050-01	1 set
08280-02	08000-02	08050-02	1 set
08280-03	08000-03	08050-03	1 set

Handle

for drilling jigs

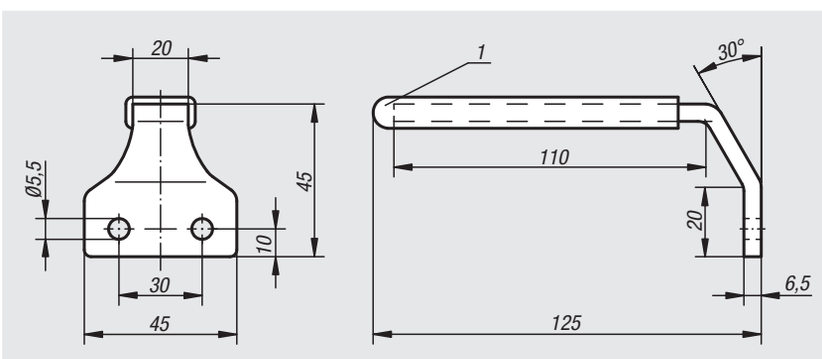

Material:
Light metal

Version:
black powder-coated.

Sample order:
nlm 08300-01

Drawing reference:
1) plastic handle

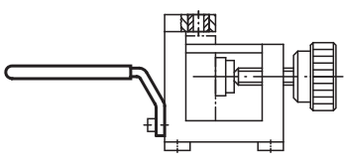

Order No.	Dimensions
08300-01	see drawing

Technical information for DIN 6348 drilling jigs

Using norelem drilling jigs, down times and machine costs can be saved by significantly reducing the clamping times. The stress is removed from the design department and toolmaking through the universal ability to use the drilling jigs, even for small-scale production runs.

The drill and support plates are prepared dependent on the bore spacing of the part to be machined. While the corresponding drill bushes are placed in the drill plate, fixing pins are attached to the support plate to enable quick and easy positioning of the part for machining. Since the drill and supporting plates can be changed quickly, the drilling jig is immediately available for another part to be machined.

Version:
The drilling jigs are supplied in 9 sizes. They differ in terms of the position of the working area relative to the columns. In the case of sizes 0 to 3 the working area is in front of the columns, in sizes 3 to 5 the working area is between the columns.

Operating method:
The worm shaft has cones at both ends. The axial force of the helical gear drive pulls the cone of the shaft into a tapered bore in the casing. The pair of cones at the ends of the worm shaft work in opposition to the powerful and consistent clamping top and bottom; as a result, the drill plate cannot fall onto hands when the part to be machined is changed. The clamp holds perfectly and safely, even with vibration. The clamping element can be taken apart and put together by anyone, even those with no technical training. The clamping lever can be changed from left to right-hand use by loosening the screw in the right-hand cone. The worm shaft can now be used with the adjustable clamping lever on the right-hand side.

The clamp is activated by pressing the lever down and released by lifting the lever up. The best working position can be engaged using the adjustable clamping lever, so the operator can work in a standing or seated position.

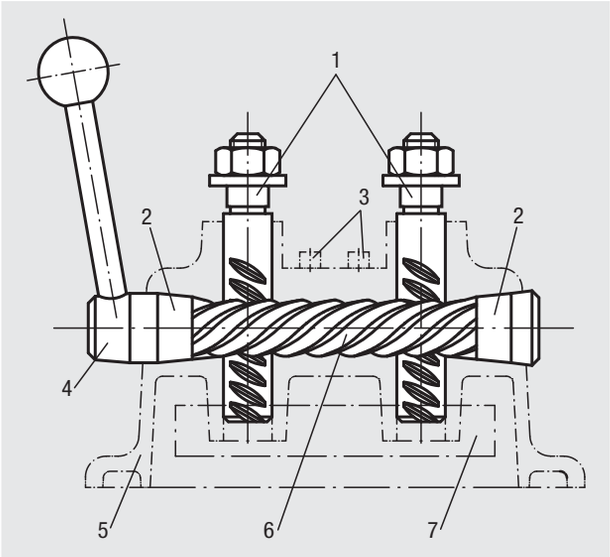

Drawing reference:
1. worm column
2. cone
3. locating pins
4. adjustable clamping lever
5. housing
6. worm shaft
7. grip

Force tables

Hand force N	Size							
	0	1	2	2S	3S	3	4	5
	Clamping force N							
100	600	1200	1250	1250	1300	2800	2900	3800
200	1100	2100	2150	2150	2200	5500	5600	7500

Drilling jigs

DIN 6348

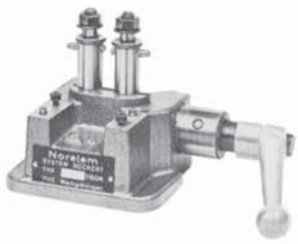

Size 0: 60 x 32 x 34 mm

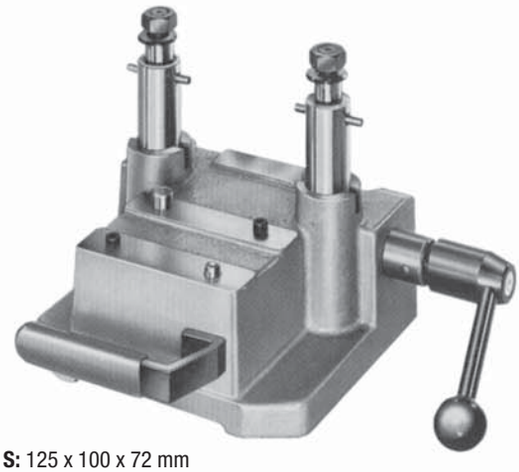

Size 3 S: 125 x 100 x 72 mm

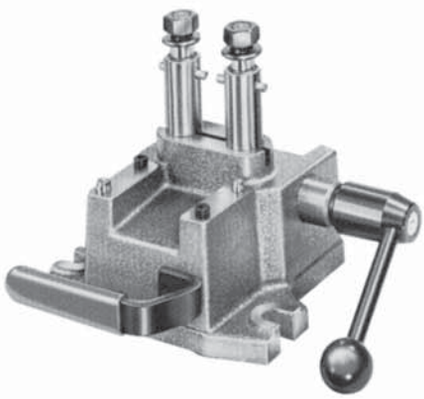

Size 1: 80 x 50 x 60 mm
Size 2: 100 x 60 x 70 mm

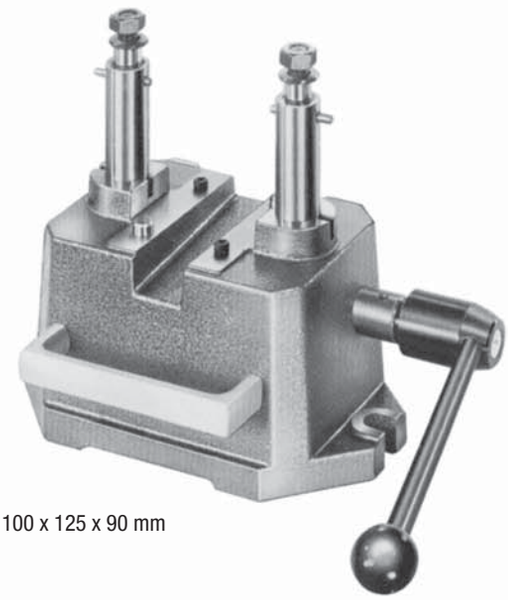

Size 3: 100 x 125 x 90 mm

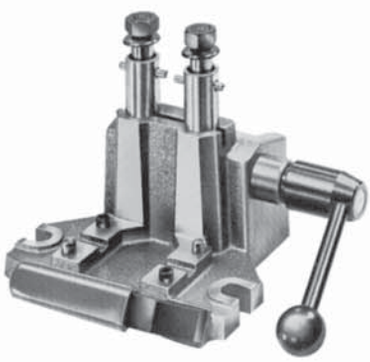

Size 2 S:
a size with expanded working area: 100 x 60 x 125 mm

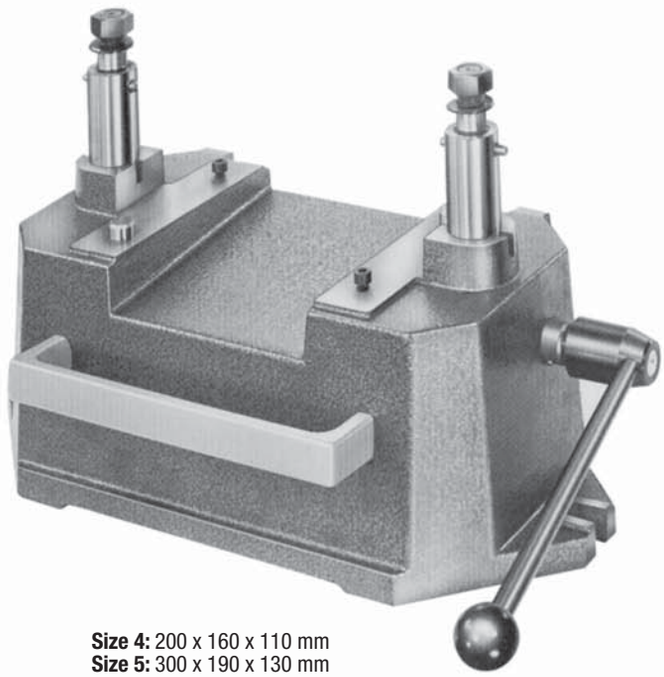

Size 4: 200 x 160 x 110 mm
Size 5: 300 x 190 x 130 mm

Drilling jigs size 0 to 3 S

DIN 6348 enhanced

Sample order:
nlm 08550-02

Note:
Accessories, see 08570 - 08610 and 08640 - 08710.
Force table, see technical information for DIN 6348 drilling jigs.

working area

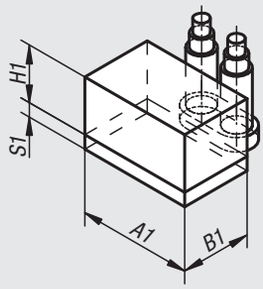

The working area can be expanded:
By A1 and B1 with larger drilling plates or support plates.
By H1 with extension columns 08600 and 08610.

size 0 to 2 S

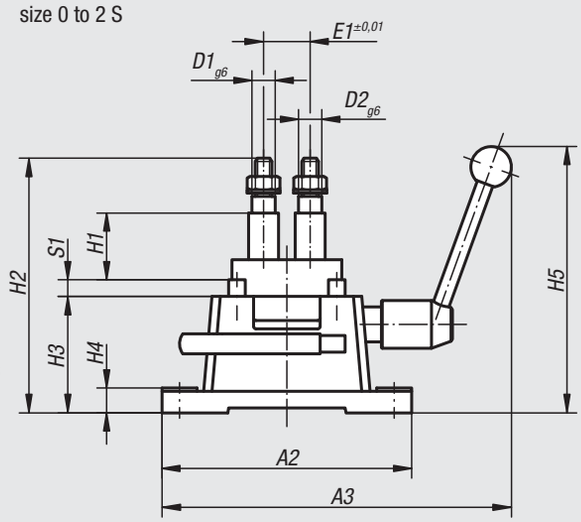

size 3 S

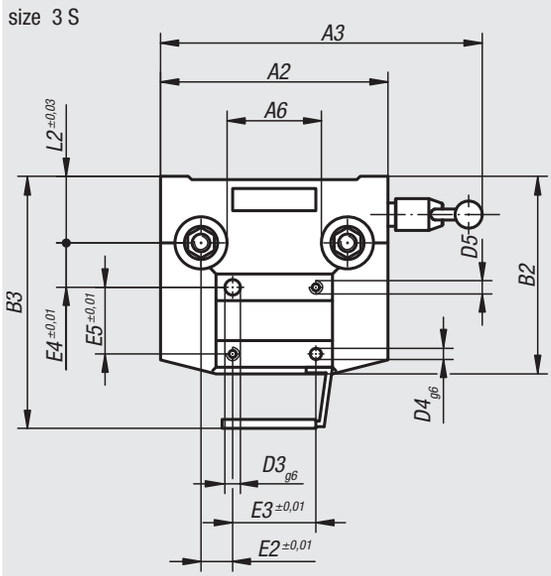

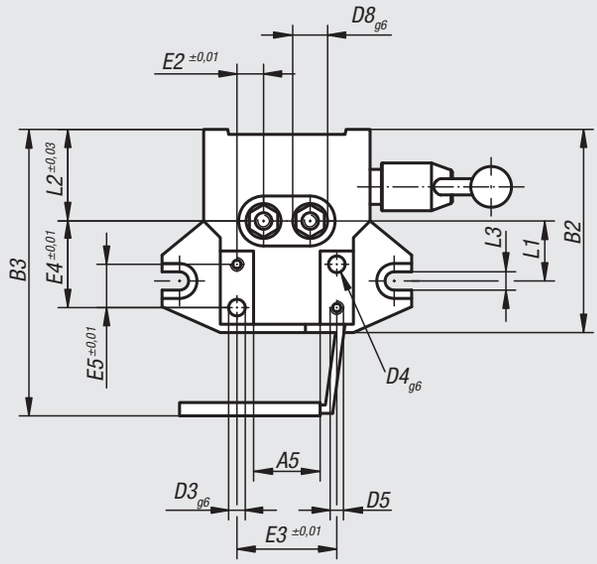

Order No.	Size	Size DIN 6348	A1	A2	A3	A5	A6	B1	B2	B3	D1	D2	D3	D4	D5	D8
08550-00	0	60x32	63	100	190	35	-	32	86	-	10	9	4	5	M4	15
08550-01	1	80x50	80	150	250	40	-	50	122	172	14	14	10	8	M6	18
08550-02	2	100x60	100	180	270	56	-	60	146	200	16	16	10	8	M6	25
08550-12	2S	100x60x115	100	180	275	50	-	60	152	200	16	16	10	8	M6	25
08550-13	3S	125x100	125	205	400	-	95	85	178	228	20	18	14	10	M6	30

Order No.	E1	E2	E3	E4	E5	H1 min.	H1 max.	H2 min.	H2 max.	H3	H4	H5	L1	L2	L3	S1	Stroke at 210°
08550-00	24	13	50	40	18	3	28	73,5	100	48	9	125	31	35	-	6	42
08550-01	28	16	60	46	20	8	50	109,5	153	70	16	200	36	55	12	10	42
08550-02	50	15	80	70	40	8	60	125	180	80	18	210	50	60	15	10	42
08550-12	50	15	80	70	40	63	115	125	180	25	19	210	50	60	15	10	42
08550-13	132	28,5	75	40	60	10	62	138	196	85	22	390	-	60	-	10	42

Drilling jigs size 3 to 5

DIN 6348

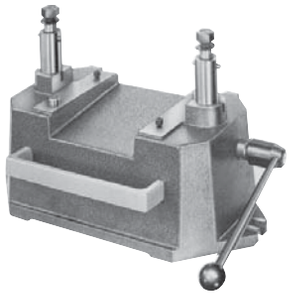

Sample order:
nlm 08550-05

Note:
Accessories see 08570 – 08610.
Force table, see technical information for DIN 6348 drilling jigs.

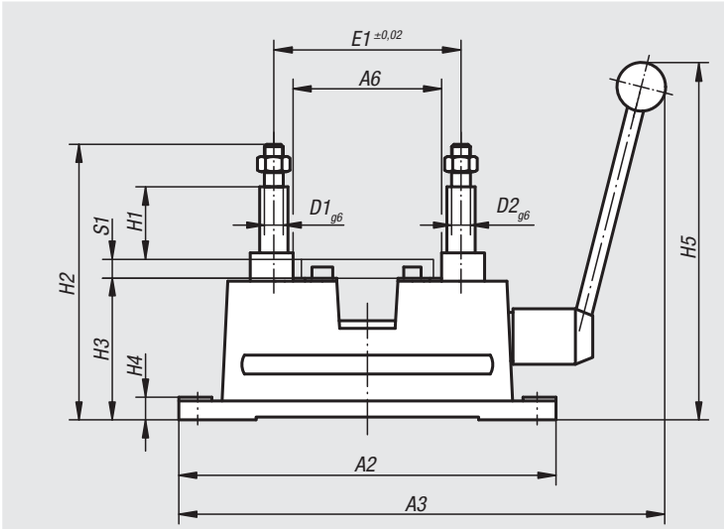

working area

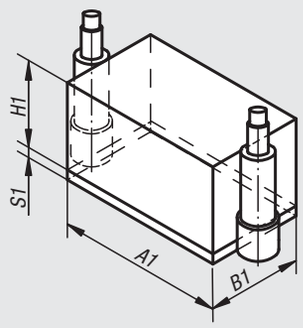

The working area can be expanded:
By A1 and B1 with larger drilling plates or support plates.
By H1 with extension columns 08600 and 08610.

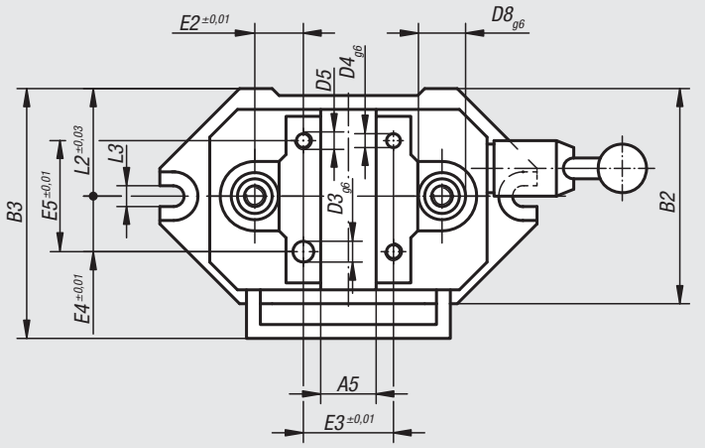

Order No.	Size	Size DIN 6348	A1	A2	A3	A5	A6	B1	B2	B3	D1	D2	D3	D4	D5	D8
08550-03	3	100x125	85	270	340	39	95	125	155	195	20	18	14	10	M6	30
08550-04	4	200x160	188	400	480	120	195	160	195	235	20	18	14	10	M8	30
08550-05	5	300x190	278	530	660	180	285	190	238	278	24	22	20	18	M8	40

Order No.	E1	E2	E3	E4	E5	H1 min.	H1 max.	H2 min.	H2 max.	H3	H4	H5	L2	L3	S1	Stroke at 210°
08550-03	132	36	60	37,5	75	10	80	194	264	130	24	400	80	16	10	42
08550-04	236	43	150	50	100	5	95	205	295	152	24	420	100	16	15	42
08550-05	335	57,5	220	62,5	125	15	115	255	355	180	24	550	120	16	15	42

Drilling plates

DIN 6348 enhanced

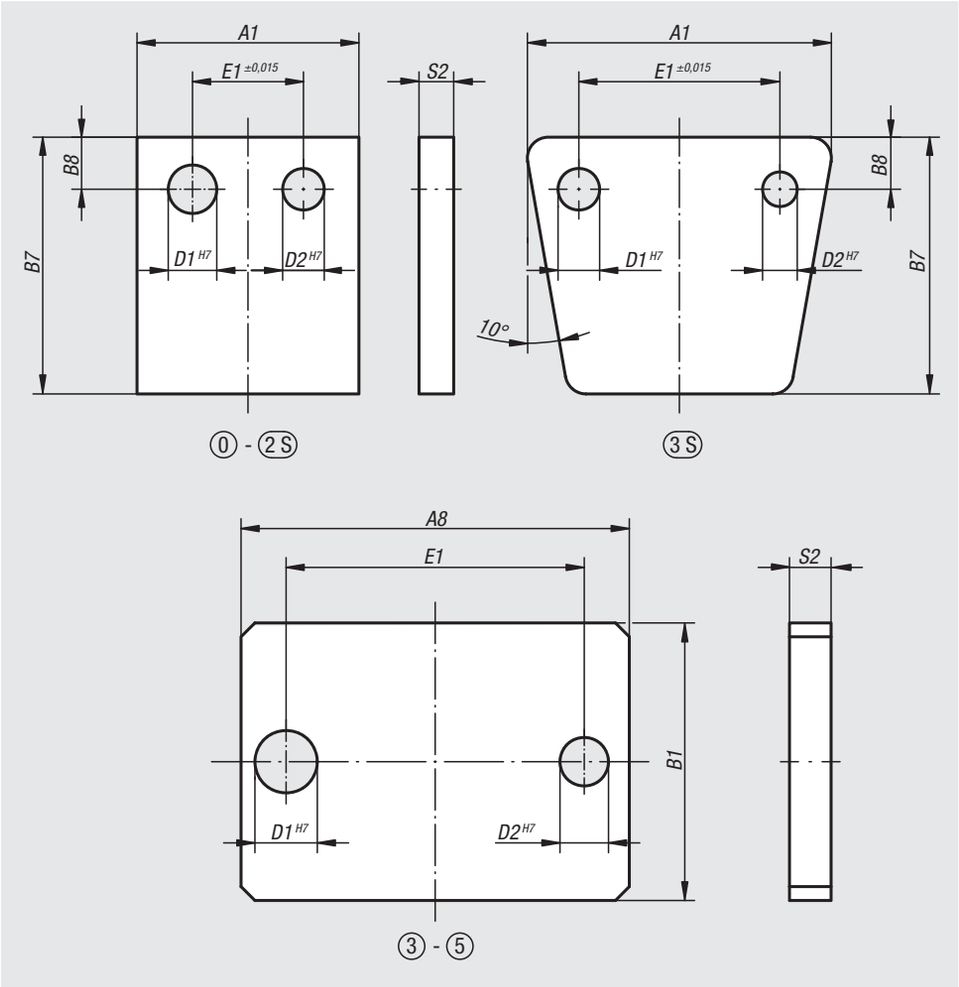

Material:
Steel.

Version:
Black oxidised.
08570-13 bright.

Sample order:
nlm 08570-03

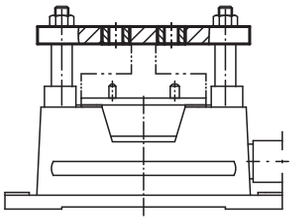

Order No.	Size	Suitable for jig size	Jig dimensions	A1	B7	B8	E1	D1	D2	S2
08570-00	0 - 3S	0	60 x 32	50	56	9	24	10	9	8
08570-01	0 - 3S	1	80 x 50	80	80	14	28	14	14	12
08570-02	0 - 3S	2	100 x 60	100	96	16	50	16	16	14
		2 S	100 x 60 x 115							
08570-13	0 - 3S	3S	125 x 100	168	130	17	132	20	18	15

Order No.	Size	Suitable for jig size	Jig dimensions	A8	B1	E1	D1	D2	S2
08570-03	3 - 5	3	100 x 125	170	125	132 ±0,015	20	18	16
08570-04	3 - 5	4	200 x 160	275	160	236 ±0,015	20	18	16
08570-05	3 - 5	5	300 x 190	380	190	335 ±0,015	24	22	20

Base plates

DIN 6348

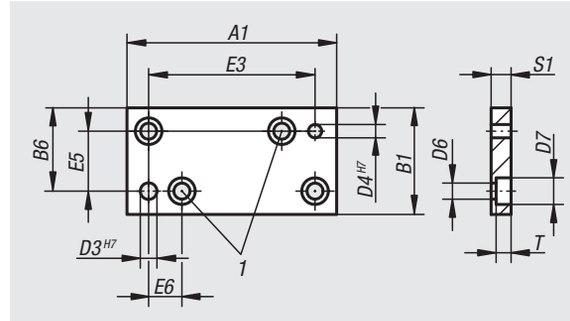

Material:
Steel.

Version:
Black oxidised.

Sample order:
nlm 08580-05

Drawing reference:
1) these two holes only with size 6

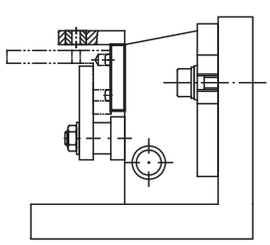

Order No.	Suitable for jig size	Jig dimensions	A1	B1	B6	D3	D4	D6	D7	E3	E5	E6	S1	T
08580-00	0	60 x 32	63	32	25	4	5	4,5	8	50 ±0,01	18 ±0,01	-	6	4,6
08580-01	1	80 x 50	80	50	30	10	8	6,6	11	60 ±0,01	20 ±0,01	-	10	6,8
08580-02	2	100 x 60	100	60	50	10	8	6,6	11	80 ±0,01	40 ±0,01	-	10	6,8
	2 S	100 x 60 x 115												
08580-03	3	100 x 125	85	125	100	14	10	6,6	11	60 ±0,015	75 ±0,015	-	10	6,8
	3 S	125 x 100												
08580-04	4	200 x 160	188	160	130	14	10	9	15	150 ±0,015	100 ±0,015	-	15	9
08580-05	5	300 x 190	278	190	157,5	20	18	9	15	220 ±0,015	125 ±0,015	-	15	9
08580-06	6	400 x 250	400	250	225	20	18	13,5	20	320 ±0,015	200 ±0,015	40	18	13

08600

Extension columns

short

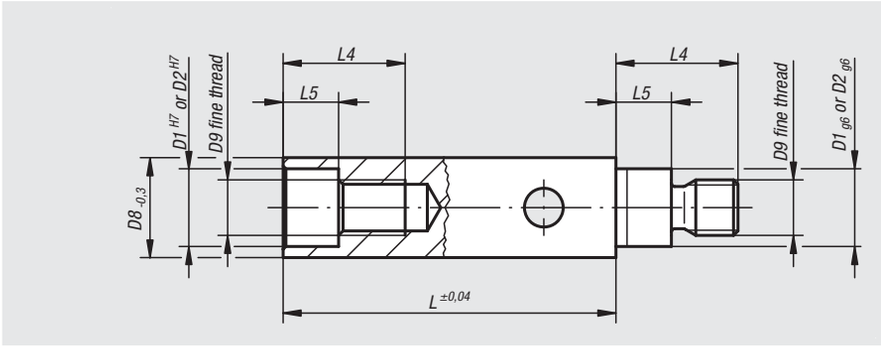

Material:
Hardened steel 1.7139

Version:
Hardened, black oxidised.

Sample order:
nlm 08600-01 (in pairs)

Note:
Supplied in pairs.

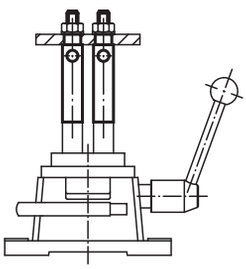

Order No.	Suitable for jig size	D1	D2	D8	D9	L	L4	L5
08600-01	1	14	14	22	M10x1	60	22	10
08600-02	2 + 2S	16	16	25	M14x1,5	60	28	12
08600-03	3 + 3S + 4	20	18	30	M14x1,5	60	32	14,5
08600-05	5	24	22	40	M20x1,5	60	43	18
08600-06	6	26	24	40	M20x1,5	70	46	22

08610

Extension columns

long

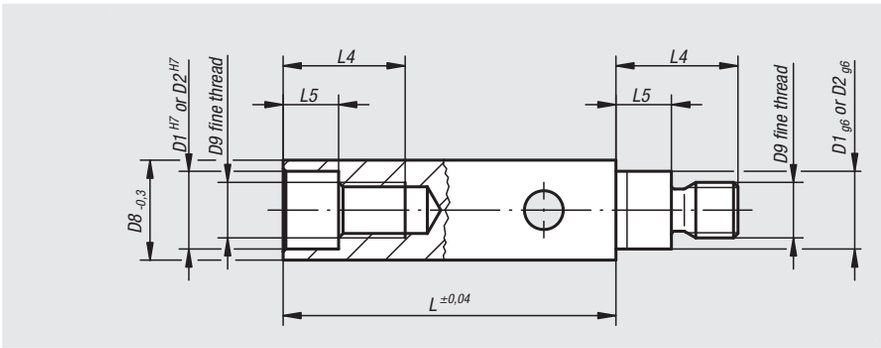

Material:
Hardened steel 1.7139

Version:
Hardened, black oxidised.

Sample order:
nlm 08610-03 (in pairs)

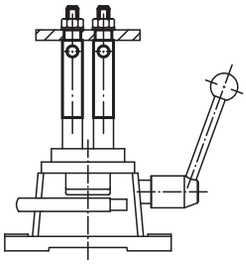

Order No.	Suitable for jig size	D1	D2	D8	D9	L	L4	L5
08610-02	2 + 2S	16	16	25	M14x1,5	120	28	12
08610-03	3 + 3S + 4	20	18	30	M14x1,5	120	32	14,5
08610-05	5	24	22	40	M20x1,5	120	43	18
08610-06	6	26	24	40	M20x1,5	120	46	22

Examples of diverse drilling jigs using almost exclusively norelem parts:

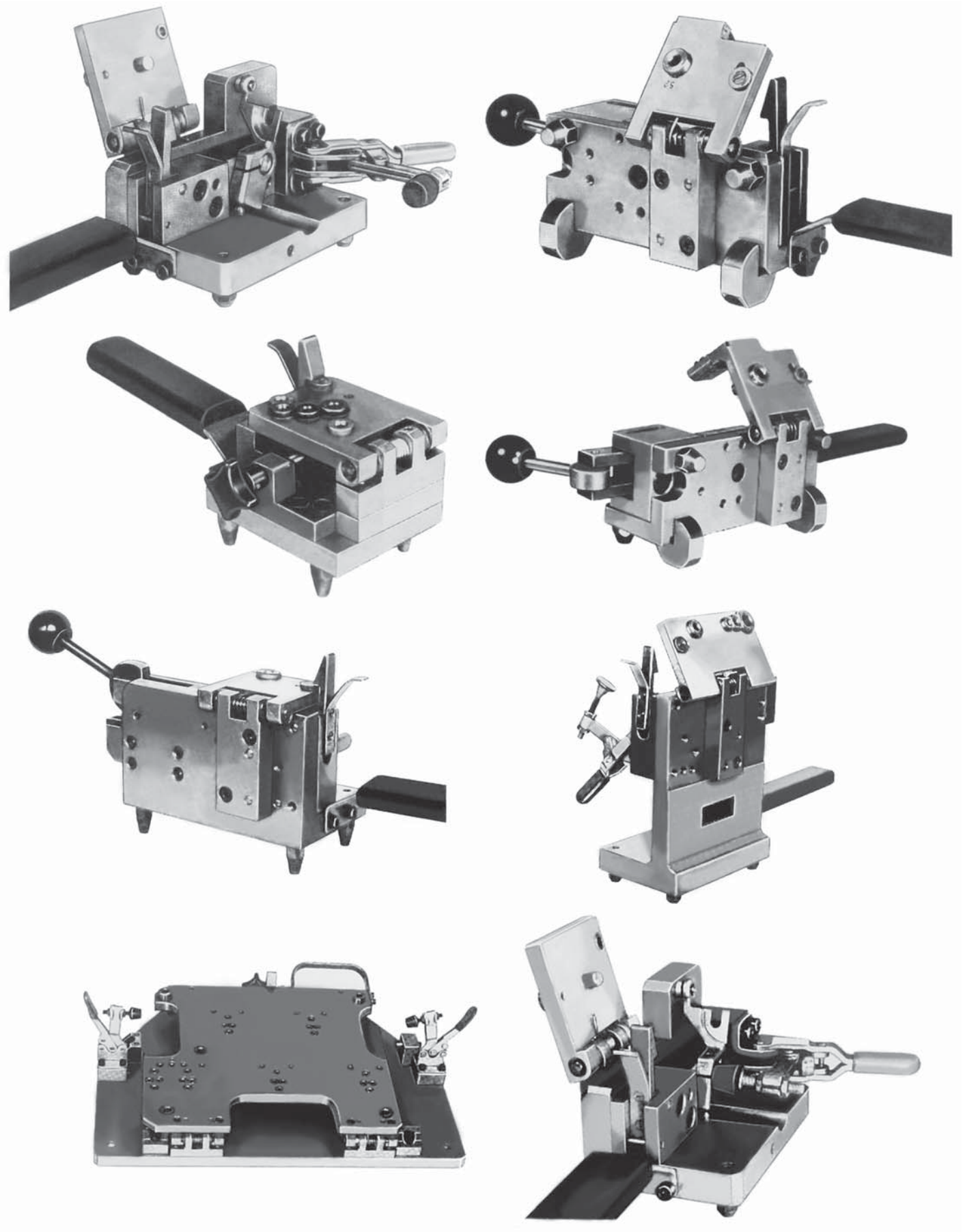

Drilling jigs for cylindrical parts

Version:
A consisting of:
– 08550 drilling jig DIN 6348
– 08710 V-block with stop
– 08640 Index drilling disc with 16 common drill bush diameters, see table. Intermediate sizes can be partially achieved using DIN 173 push-in drill bushes.

B consisting of:
– 08550 drilling jig DIN 6348
– 08710 V-block with stop
– 08650 drill bush holder plate with 4 bush holders size 5-8, Ø 8, Ø 10, Ø 12 and Ø 15. Intermediate sizes can be partially achieved using DIN 173 push-in drill bushes. See table for choice of drill bush holders sizes 1 to 4. All drill bush holders can be used for holder plates size 0 and 2.

Sample order:
nlm 08630-12

Note:
Drilling jigs for cylindrical parts are particularly rational for producing transverse holes in round bars. The drilling jigs DIN 6348 size 0 and 2 are used as the basic elements.
A V-block with adjustable stop with mm divisions and nonius is used in place of the standard support plate. The index drilling discs or drilling bush holders are mounted on the columns. Set-up is very easy and can be done without special technical knowledge.
All parts can be individually supplied at a later date. They are produced true to gauge enabling Forms A and B to be interchangeable. A clamped part can be drilled, reamed, counterbored and tapped using push-in bushes.

Size 0
for workpieces Ø 2 to 28 mm

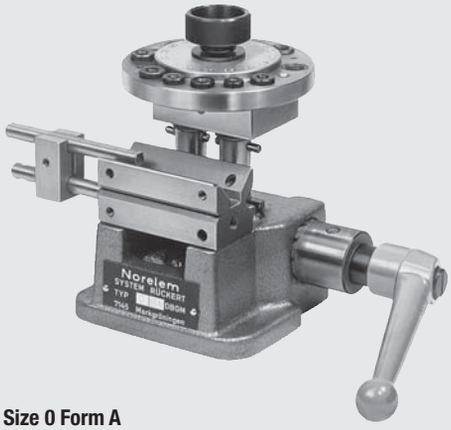

Size 0 Form A
with V-block and index drilling disc

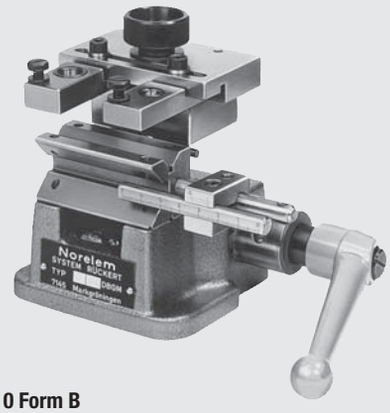

Size 0 Form B
with V-block and bush holders,
adjustment range of holders: 64 mm

Size 2
for workpieces Ø 6 to 60 mm

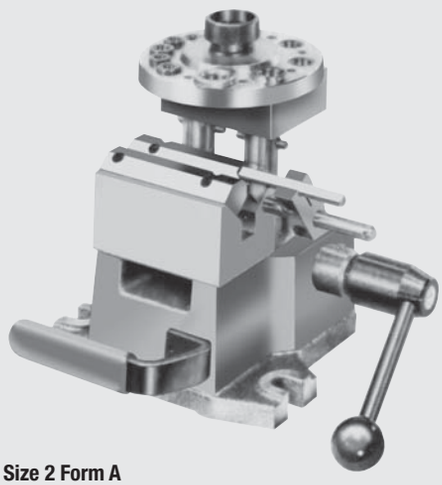

Size 2 Form A
with V-block and index drilling disc

Insert a Ø10 mm shaft to align the upper prism rail then tighten the cap screws

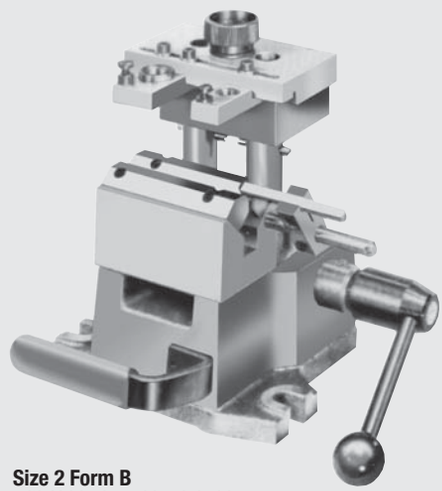

Size 2 Form B
with V-block and bush holders,
adjustment range of holders: 100 mm

Order No.	Size	Form
08630-10	0	A
08630-12	2	A
08630-20	0	B
08630-22	2	B

Index drilling discs

for drilling jig for cylindrical parts

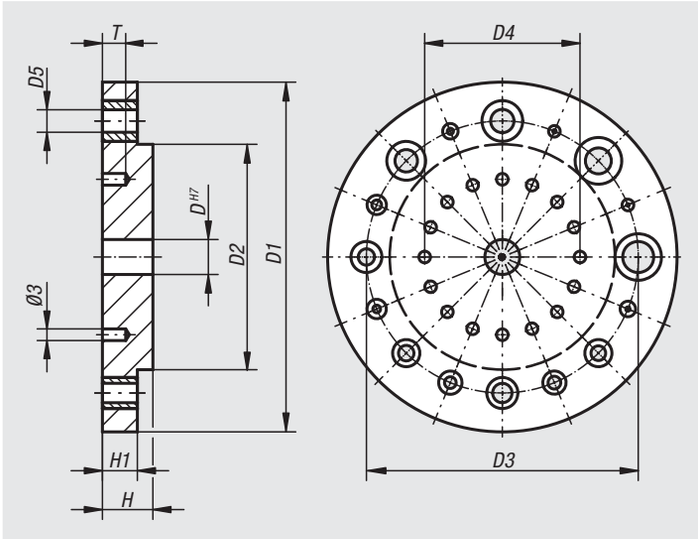

Material:
Steel 1.0036

Version:
Bright.

Sample order:
nlm 08640-00

Note:
On request we can prepare the index drilling disc according to your specifications or supply them pre-bored and reamed to 4 mm.

Pressed-in drill bushes 08900 D5 by 08640-00 0,7 / 0,9 / 1,1 / 1,6 / 2 / 2,5 / 3 / 3,3 / 3,8 / 4 / 4,2 / 5 / 5,8 / 6 / 6,7 / 8*
Pressed-in drill bushes 08900 D5 by 08640-02 3 / 3,3 / 3,8 / 4 / 4,2 / 5 / 5,8 / 6* / 6,7 / 8* / 8,4 / 10* / 11,8 / 12* / 13,8 / 15*

* Standard bushes for replaceable drill bushes

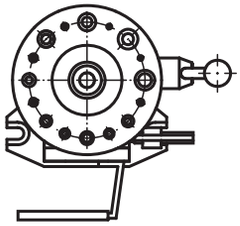

Order No.	Suitable for cylinder jig size	D	D1	D2	D3	D4	H	H1	T
08640-00	0	9	88	57	70	40	12,5	9	8
08640-02	2	16	123	67	94	60	18	12	8

Drill bush holder plates

for drilling jig for cylindrical parts

Material:
Steel 1.0036

Version:
Bright.

Sample order:
nlm 08650-02: Drill bush holder plates
nlm 08650-12X3.9 (include dimension D): Drill bush holder

Note:
The drill bush holders suitable for the drill bush holder plates must also be ordered.

* Basic bush for push-in drill bushes.

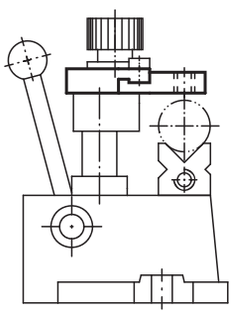

Drill bush holder plate

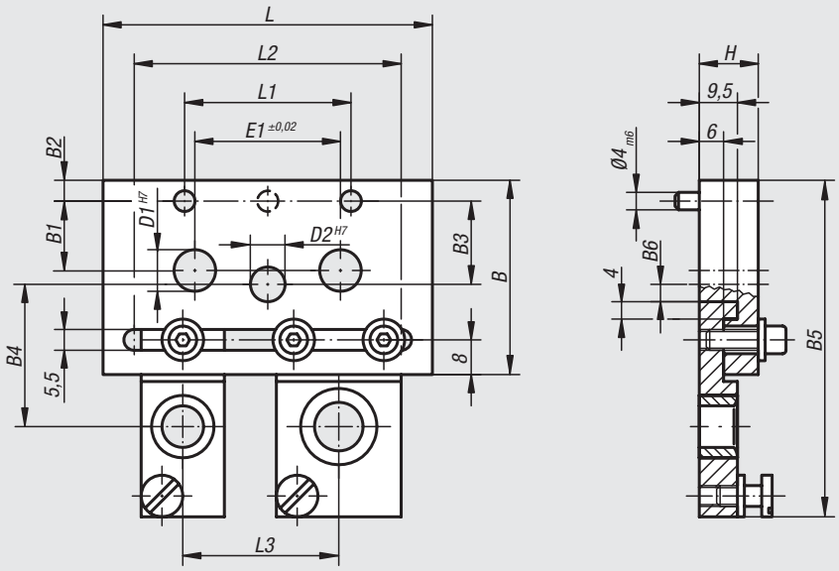

Drill bush holder

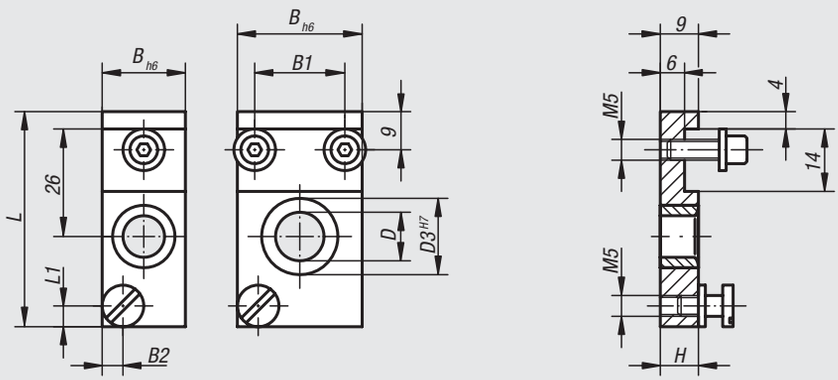

smallest hole spacing L3 = $\frac{\text{“B” of 1}^{st}\text{ drill bush holder + “B” of 2}^{nd}\text{ drill bush holder}}{2}$

Order No.	Description	Suitable for cylinder jig size	D1	D2	E1	L	L1	L2	B	B1	B2	B3	B4	B5 with bush holder size 1 and 2	B5 with bush holder size 3 to 8	B6	H
08650-00	Drill bush holder plate	0	-	9	-	80	40	65	47	-	5	20	35	66	82	5	14
08650-02	Drill bush holder plate	2	16	16	50	120	80	100	68	30	4	30	47	87	103	17	19

Order No.	Description	Size	D applicable drill bush	D applicable bush from	D applicable for bush to	D3	L	L1	B	B1	B2	H
08650-10	Drill bush holder	1	-	0,4	3,3	3	36	-	8	-	-	10
08650-12	Drill bush holder	2	-	3,4	6	4	36	-	12	-	-	10
08650-13	Drill bush holder	3	-	6,1	10	4	52	-	20	-	-	10
08650-14	Drill bush holder	4	-	10,1	15	4	52	-	30	20	-	10
08650-15	Drill bush holder	5	8*	-	-	-	52	5	20	-	5	10
08650-16	Drill bush holder	6	10*	-	-	-	52	5	20	-	5	12
08650-17	Drill bush holder	7	12*	-	-	-	52	5	30	20	5	12
08650-18	Drill bush holder	8	15*	-	-	-	52	5	30	20	5	12

V-blocks

with stop

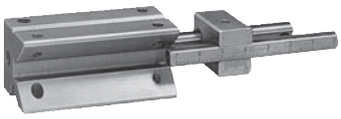

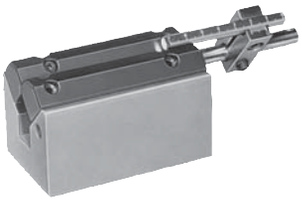

Material:
Prism 1.0531.
Slides steel.

Version:
Prism bright.
Slides black oxidised and ground.

Sample order:
nlm 08710-02

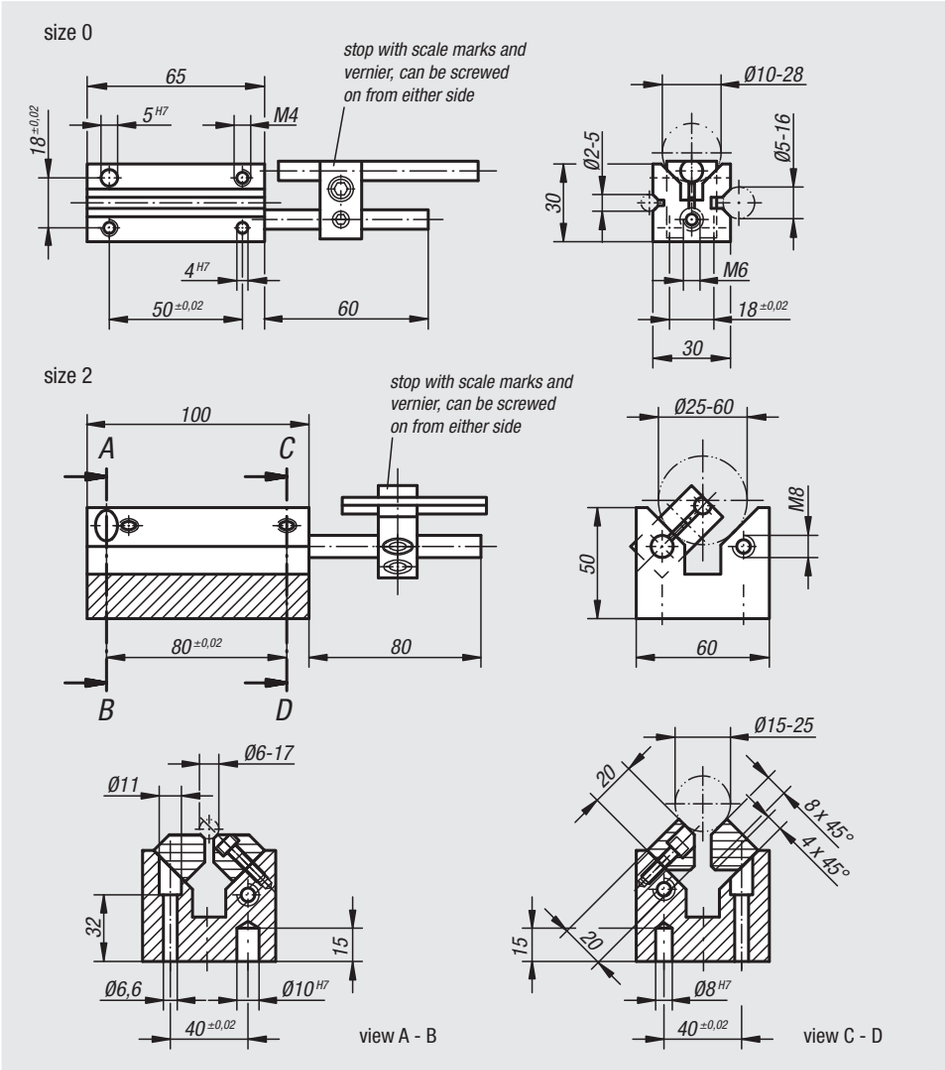

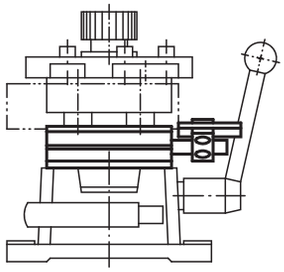

Order No.	Suitable for cylinder jig size
08710-00	0
08710-02	2

Drill bushes cylindrical

DIN 179

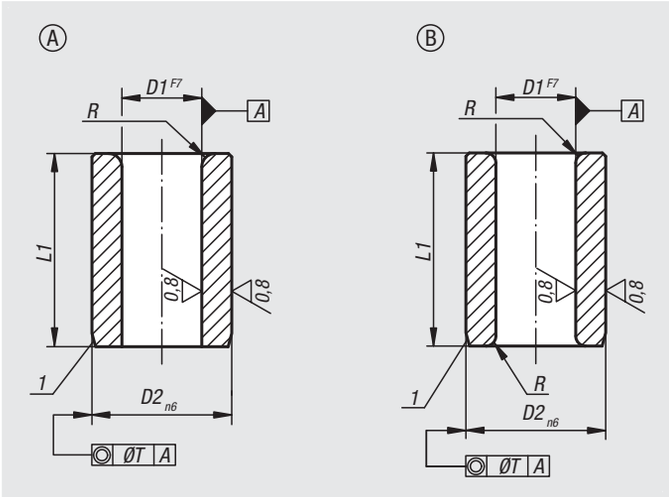

Material:
Special low carbon steel

Version:
Hardened to 740 ±80 HV 10 and ground.

Sample order:
nlm 08900-A0120X06
(bush Form A D1 = 1.2 mm and L1 = 6 mm)

Note:
From diameter D1 over 15 mm size increases are 0.5 mm.

Drawing reference:
Form A: hole rounded one end
Form B: hole rounded both ends

1) Chamfer for insert

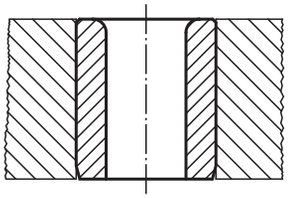

D1	D2	L1	Version	R	T
from 0.4 to 0.8	3	6	short	1	0,01
from 0.9 to 1.0	3	6/9	short/medium	1	0,01
from 1.1 to 1.8	4	6/9	short/medium	1	0,01
from 1.9 to 2.6	5	6/9	short/medium	1	0,01
from 2.7 to 3.3	6	8/12/16	short/medium/long	1	0,01
from 3.4 to 4.0	7	8/12/16	short/medium/long	1	0,01
from 4.1 to 5.0	8	8/12/16	short/medium/long	1	0,01
from 5.1 to 6.0	10	10/16/20	short/medium/long	1,5	0,02
from 6.1 to 8.0	12	10/16/20	short/medium/long	1,5	0,02
from 8.1 to 10.0	15	12/20/25	short/medium/long	2	0,02
from 10.1 to 12.0	18	12/20/25	short/medium/long	2	0,02
from 12.1 to 15.0	22	16/28/36	short/medium/long	2	0,02
from 15.5 to 18.0	26	16/28/36	short/medium/long	2	0,02
from 18.5 to 22.0	30	20/36/45	short/medium/long	3	0,02
from 22.5 to 26.0	35	20/36/45	short/medium/long	3	0,02
from 26.5 to 30.0	42	25/45/56	short/medium/long	3	0,02
from 30.5 to 35.0	48	25/45/56	short/medium/long	3	0,04
from 35.5 to 42.0	55	30/56/67	short/medium/long	3,5	0,04
from 42.5 to 48.0	62	30/56/67	short/medium/long	3,5	0,04

Drill bushes with collar

DIN 172

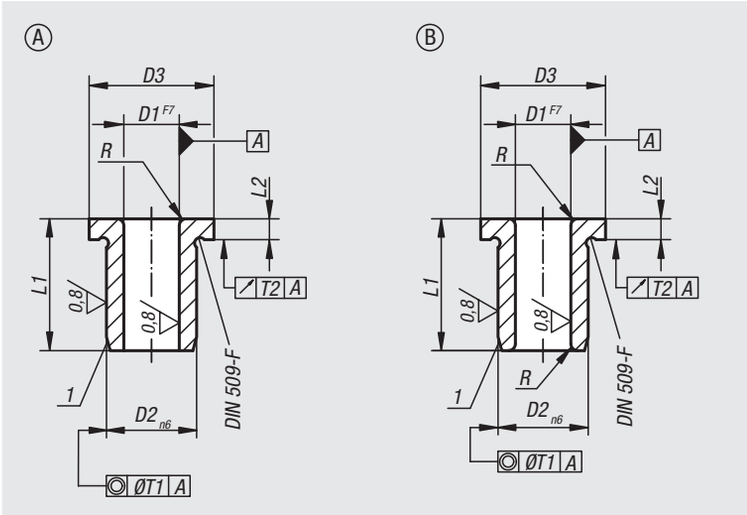

Material:
Special low carbon steel

Version:
Hardened to 740 ±80 HV 10 and ground.

Sample order:
nlm 08910-A0120X09
(bush Form A D1 = 1.2 mm and L1 = 9 mm)

Note:
From diameter D1 over 15 mm size increases are 0.5 mm.

Drawing reference:
Form A: hole rounded one end
Form B: hole rounded both ends

1) Chamfer for insert

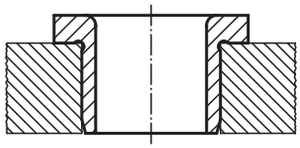

D1	D2	D3	L1	Version	L2	R	T1	T2
from 0.4 to 0.8	3	6	6	short	2	1	0,01	0,03
from 0.9 to 1.0	3	6	6/9	short/medium	2	1	0,01	0,03
from 1.1 to 1.8	4	7	6/9	short/medium	2	1	0,01	0,03
from 1.9 to 2.6	5	8	6/9	short/medium	2	1	0,01	0,03
from 2.7 to 3.3	6	9	8/12/16	short/medium/long	2,5	1	0,01	0,03
from 3.4 to 4.0	7	10	8/12/16	short/medium/long	2,5	1	0,01	0,03
from 4.1 to 5.0	8	11	8/12/16	short/medium/long	2,5	1	0,01	0,03
from 5.1 to 6.0	10	13	10/16/20	short/medium/long	3	1,5	0,02	0,03
from 6.1 to 8.0	12	15	10/16/20	short/medium/long	3	1,5	0,02	0,03
from 8.1 to 10.0	15	18	12/20/25	short/medium/long	3	2	0,02	0,03
from 10.1 to 12.0	18	22	12/20/25	short/medium/long	4	2	0,02	0,03
from 12.1 to 15.0	22	26	16/28/36	short/medium/long	4	2	0,02	0,03
from 15.5 to 18.0	26	30	16/28/36	short/medium/long	4	2	0,02	0,03
from 18.5 to 22.0	30	34	20/36/45	short/medium/long	5	3	0,02	0,03
from 22.5 to 26.0	35	39	20/36/45	short/medium/long	5	3	0,02	0,05
from 26.5 to 30.0	42	46	25/45/56	short/medium/long	5	3	0,02	0,05
from 30.5 to 35.0	48	52	25/45/56	short/medium/long	5	3	0,04	0,05
from 35.5 to 42.0	55	59	30/56/67	short/medium/long	5	3,5	0,04	0,05
from 42.5 to 48.0	62	66	30/56/67	short/medium/long	6	3,5	0,04	0,05

Drill bushes push-in

DIN 173

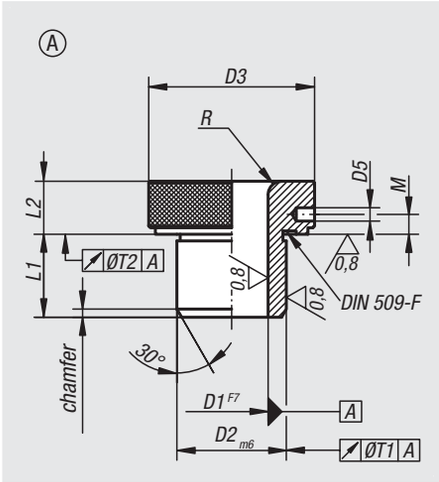

Material:
Special steel

Version:
Hardened to 780 ±40 HV 10 and ground.
Without lead-in groove.

Sample order:
nlm 08920-A1000X15 (bush Form A with D1 = 10 mm and D2 = 15 mm)

Note:
All bushes have the bore size marked on the upper face, e.g. 10. Diameters D1 over 15 mm increase in size by 0.5 mm. Supplied with matching retaining pin.

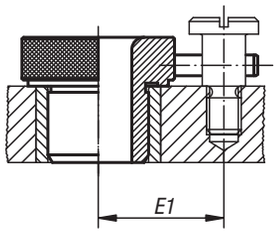

D1	D2	D3	D5	M	L1	L2	E1 centre spacing to shoulder screws	R	T1	T2
from 2.5 to 4.0	8	16	2,5	4	10	10	15	3	0,02	0,005
from 4.1 to 6.0	10	19	2,5	4	12	10	16,5	3	0,02	0,005
from 6.1 to 8.0	12	22	3	4	12	12	19,5	4	0,02	0,005
from 8.1 to 10.0	15	26	3	4	16	12	21,5	5	0,02	0,005
from 10.1 to 12.0	18	30	3	4	16	12	23,5	5	0,02	0,005
from 12.1 to 15.0	22	35	5	5	20	16	28	5	0,02	0,005
from 15.5 to 18.0	26	40	5	5	20	16	30,5	5	0,02	0,005
from 18.5 to 22.0	30	47	5	5	20	16	34	6	0,02	0,005
from 22.5 to 26.0	35	55	6	6	25	20	38	6	0,04	0,008
from 26.5 to 30.0	42	62	6	6	25	20	41,5	6	0,04	0,008
from 30.5 to 35.0	48	69	6	6	30	20	45	8	0,04	0,008
from 35.5 to 42.0	55	77	6	6	30	20	49	8	0,04	0,008
from 42.5 to 48.0	62	85	8	7,5	35	20	53	8	0,04	0,008

Drill bushes push-in

DIN 173-1

Material:
Special steel

Version:
Hardened to 780 ±40 HV 10 and ground.

Sample order:
nlm 08920-K0400X16 (bush Form K D1 = 4 mm and L1 = 16 mm)

Note:
All bushes have the bore size marked on the upper face, e.g. 15 F7.
Form K are quick-change bushes. Dowels or coiled spring pins together with DIN 173-1 flathead screws can be used in place of the stop pin.

The bayonet mount is secured with DIN 173-1 drill bush clamps together with DIN 912 socket head screws.

E2 = Hole spacing when using dowels or coiled spring pins.

Diameter D1 over 15 mm increase in size by 0.5 mm.

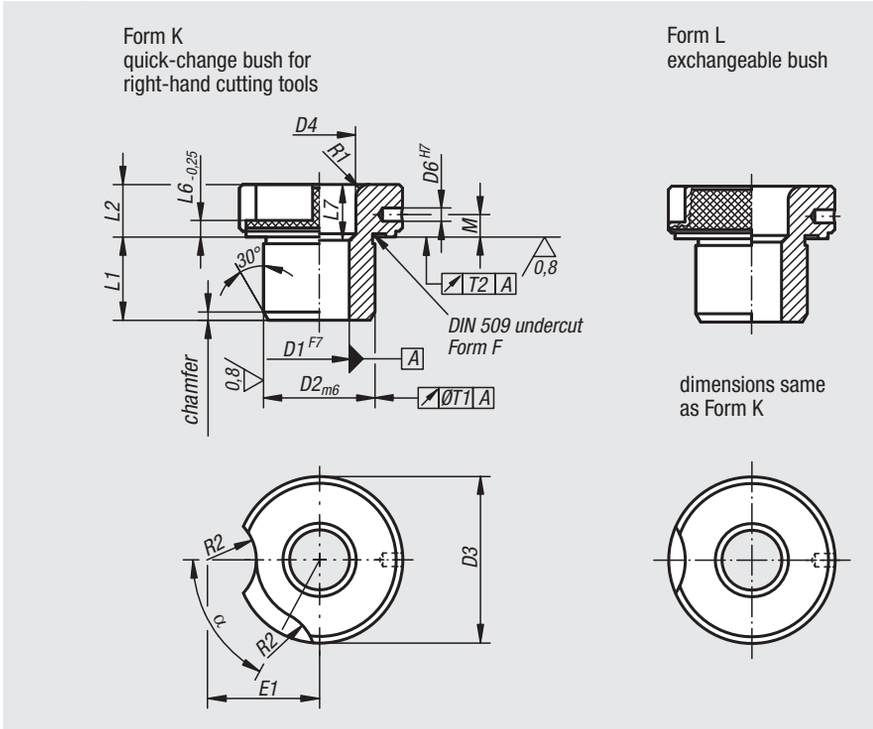

D1	Version	D2	D3	D4	D6	L1	L2	L6	L7	M	T1	T2	R1	R2	E1	E2	α
from 2.3 to 4.0	short	8	15	-	2,5	10	8	3	-	4,25	0,02	0,005	1,5	7	11,5	15	65°
from 2.3 to 4.0	medium	8	15	4,5	2,5	16	8	3	6	4,25	0,02	0,005	1,5	7	11,5	15	65°
from 4.1 to 6.0	short	10	18	-	2,5	12	8	3	-	4,25	0,02	0,005	2	7	13	17	65°
from 4.1 to 6.0	medium	10	18	6,5	2,5	20	8	3	8	4,25	0,02	0,005	2	7	13	17	65°
from 4.1 to 6.0	long	10	18	6,5	2,5	25	8	3	13	4,25	0,02	0,005	2	7	13	17	65°
from 6.1 to 8.0	short	12	22	-	3	12	10	4	-	6	0,02	0,005	2	8,5	16,5	20	60°
from 6.1 to 8.0	medium	12	22	8,5	3	20	10	4	8	6	0,02	0,005	2	8,5	16,5	20	60°
from 6.1 to 8.0	long	12	22	8,5	3	25	10	4	13	6	0,02	0,005	2	8,5	16,5	20	60°
from 8.1 to 10.0	short	15	26	-	3	16	10	4	-	6	0,02	0,005	2	8,5	18	22	50°
from 8.1 to 10.0	medium	15	26	10,5	3	28	10	4	12	6	0,02	0,005	2	8,5	18	22	50°
from 8.1 to 10.0	long	15	26	10,5	3	36	10	4	20	6	0,02	0,005	2	8,5	18	22	50°
from 10.1 to 12.0	short	18	30	-	3	16	10	4	-	6	0,02	0,005	2	8,5	20	24	50°
from 10.1 to 12.0	medium	18	30	12,5	3	28	10	4	12	6	0,02	0,005	2	8,5	20	24	50°
from 10.1 to 12.0	long	18	30	12,5	3	36	10	4	20	6	0,02	0,005	2	8,5	20	24	50°
from 12.1 to 15.0	short	22	34	-	5	20	12	5,5	-	7	0,02	0,005	3	10,5	23,5	28	35°
from 12.1 to 15.0	medium	22	34	15,5	5	36	12	5,5	16	7	0,02	0,005	3	10,5	23,5	28	35°
from 12.1 to 15.0	long	22	34	15,5	5	45	12	5,5	25	7	0,02	0,005	3	10,5	23,5	28	35°
from 15.5 to 18.0	short	26	39	-	5	20	12	5,5	-	7	0,02	0,005	3	10,5	26	31	35°
from 15.5 to 18.0	medium	26	39	19	5	36	12	5,5	16	7	0,02	0,005	3	10,5	26	31	35°
from 15.5 to 18.0	long	26	39	19	5	45	12	5,5	25	7	0,02	0,005	3	10,5	26	31	35°
from 18.5 to 22.0	short	30	46	-	5	25	12	5,5	-	7	0,02	0,005	3	10,5	29,5	35	30°
from 18.5 to 22.0	medium	30	46	23	5	45	12	5,5	20	7	0,02	0,005	3	10,5	29,5	35	30°
from 18.5 to 22.0	long	30	46	23	5	56	12	5,5	31	7	0,02	0,005	3	10,5	29,5	35	30°
from 22.5 to 26.0	short	35	52	-	6	25	12	5,5	-	7	0,04	0,008	3	10,5	32,5	37	30°
from 22.5 to 26.0	medium	35	52	27	6	45	12	5,5	20	7	0,04	0,008	3	10,5	32,5	37	30°
from 22.5 to 26.0	long	35	52	27	6	56	12	5,5	31	7	0,04	0,008	3	10,5	32,5	37	30°
from 26.5 to 30.0	short	42	59	-	6	30	12	5,5	-	7	0,04	0,008	3	10,5	36	41	30°
from 26.5 to 30.0	medium	42	59	31	6	56	12	5,5	26	7	0,04	0,008	3	10,5	36	41	30°
from 26.5 to 30.0	long	42	59	31	6	67	12	5,5	37	7	0,04	0,008	3	10,5	36	41	30°

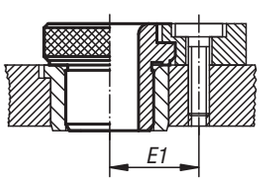

Quick-change drill bush Form K
with DIN 172 bush with collar
or DIN 179 bush

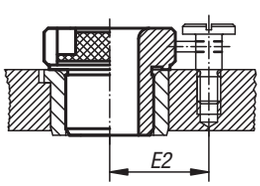

Quick-change drill bush Form K
with DIN 172 bush with collar
or DIN 179 bush

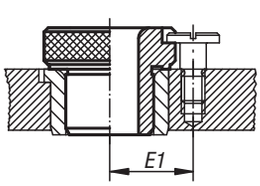

Exchangeable drill bush Form L
with DIN 172 bush with collar
or DIN 179 bush

08926

Drill bush clamps

DIN 173-1

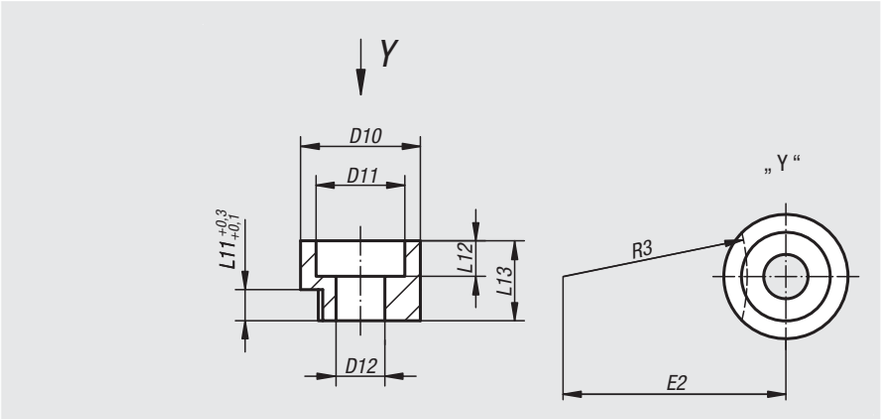

Material:
Bush clamp 1.0711.
Cap screw steel.

Version:
Bright.

Sample order:
nlm 08926-061X10 (clamping bush D12= 6.1 mm and L13 = 10 mm)

Note:
A DIN 912 cap screw is supplied.

Order No.	D12	for drill bushes (D1)	D10	D11	L11	L12	L13	E2	R3	Socket head screw DIN 912
08926-051X08	5,1	≤ 6.0	13	10	3	4	8	13,2	9,5	M5x16
08926-061X10	6,1	> 6.0 ≤ 12.0	16	12	4	5	10	19,7	15	M6x20
08926-081X12	8,1	> 12.0 ≤ 30.0	20	15	5,5	5	12	36,2	30	M8x25

08927

Shoulder screws flathead

for DIN 173 drill bushes

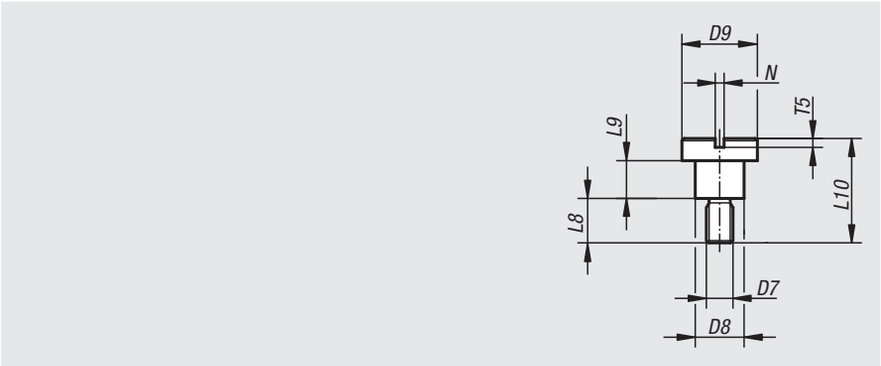

Material:
Steel.

Version:
Bright, grade 10.9

Sample order:
nlm 08927-06X04 (DIN 173-1 screw D7 = M6 and L9 = 4 mm)

Order No.	Version	D7	for drill bushes (D1)	L8	L9	L10	D8	D9	N	T5
08927-05X03	short	M5	≤ 6.0	9	3	15	7,5	13	1,6	2
08927-06X04	short	M6	>6.0≤12.0	10	4	18	9,5	16	2	2,5
08927-08X55	short	M8	>12.0≤30.0	11,5	5,5	22	12	20	2,5	3
08927-05X06	long	M5	≤6.0	9	6	18	7,5	13	1,6	2
08927-06X08	long	M6	>6.0≤12.0	10	8	22	9,5	16	2	2,5
08927-08X105	long	M8	>12.0≤30.0	11,5	10,5	27	12	20	2,5	3

09000

Magnets

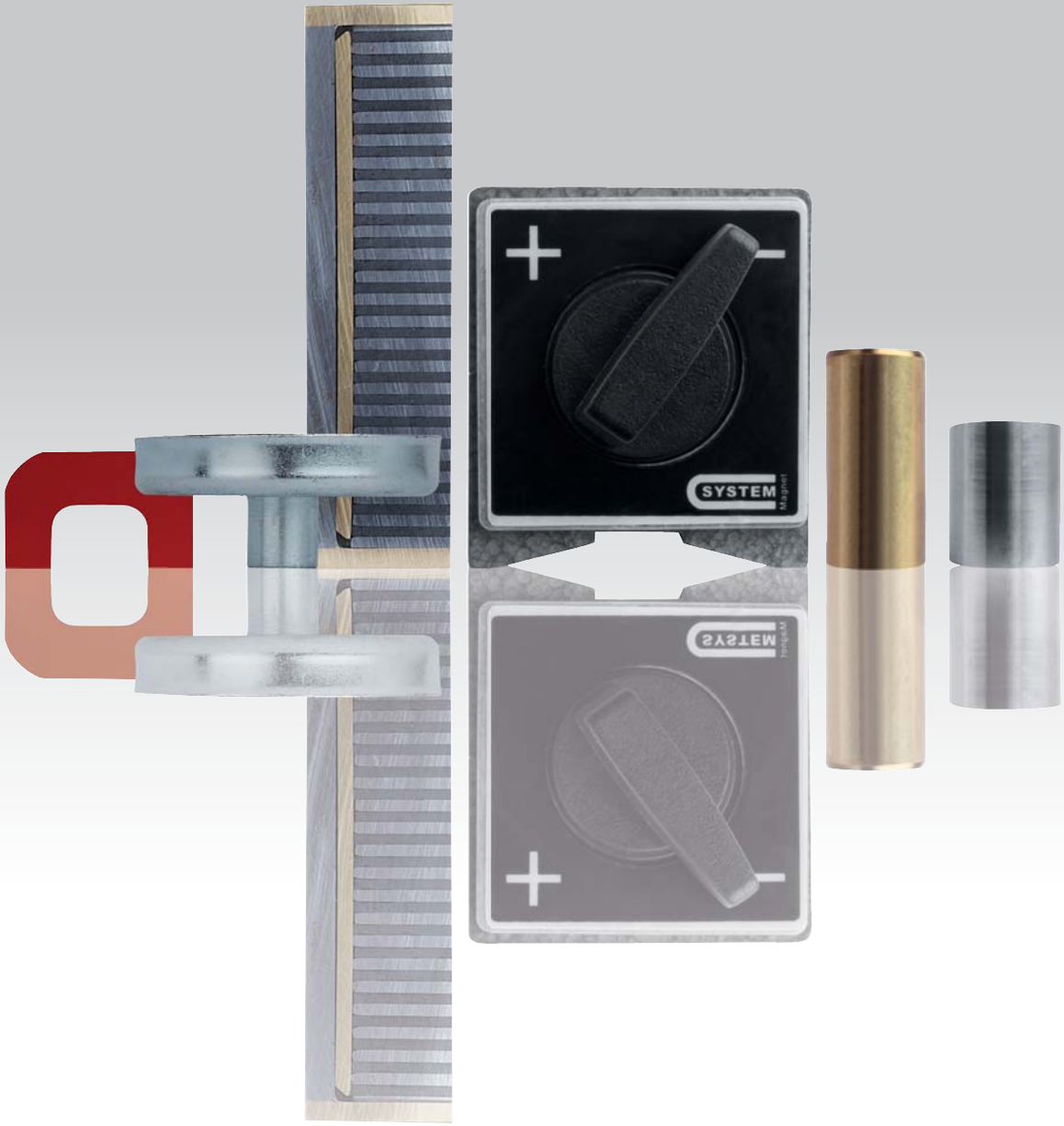

Permanent workholding magnets

with fine pole division

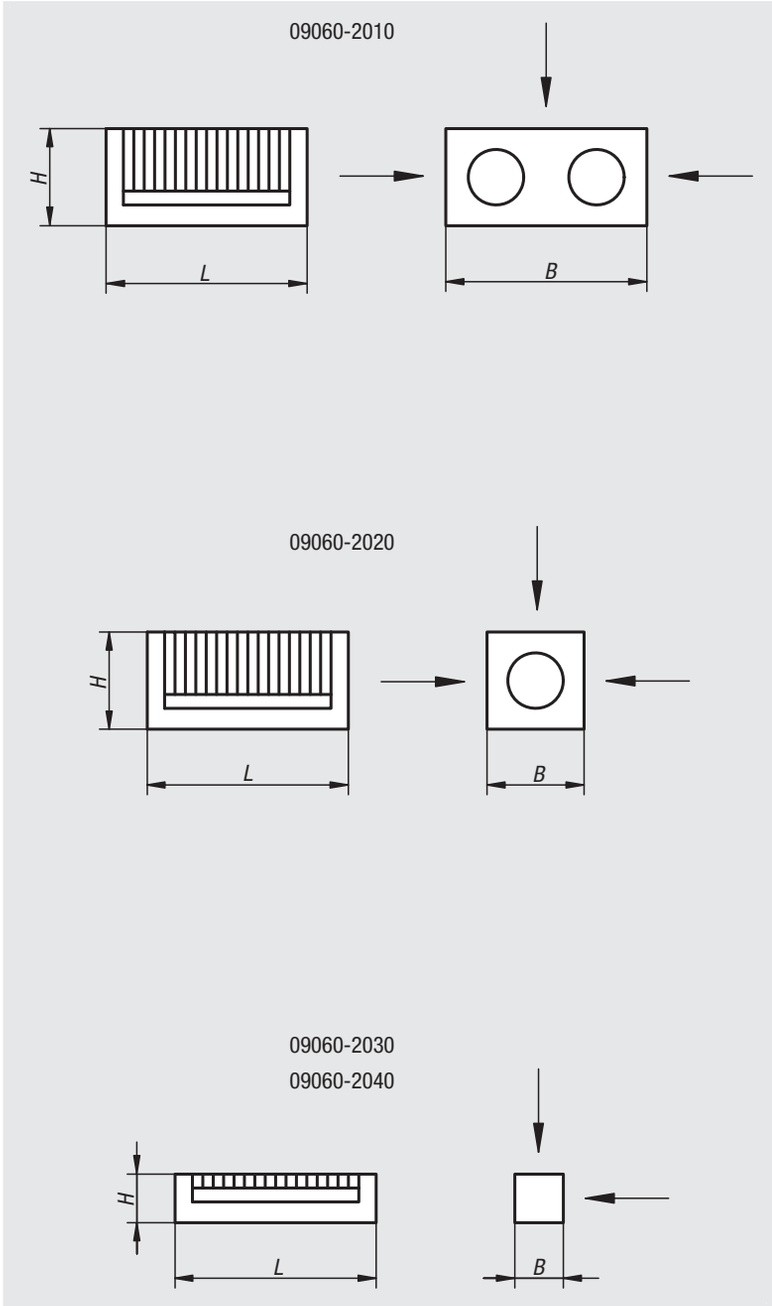

Sample order:
nlm 09060-2020

Note:
The workholding magnets 09060-2010 to 09060-2030 consist of a permanent magnetic system with fine pole divisions (4 mm) which are effective on two or three faces.
To clamp extremely thin steel parts we recommend the magnet 09060-2040 with the finest pole division of 1.3 mm. The magnetic lifespan of the workholding magnets under conditions prevailant in industrial machining is unlimited.
Approximately half the height of the workholding magnets can be ground down or polished away with no significant impairment of the magnetic strength.

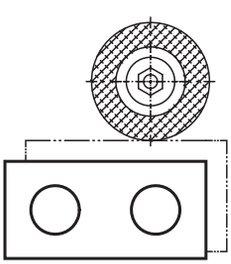

Order No.	L	B	H	Max. angular deviation	Magnetic faces mm
09060-2010	100	100	50	10‘	1 face 100 x 100 2 faces 100 x 50
09060-2020	100	50	50	10‘	3 faces 100x50
09060-2030	100	25	25	10‘	2 faces 100x25
09060-2040	100	25	25	10‘	2 faces 100x25

Technical data for pot magnets

Structure:
Pot magnets are magnets that, due to their structure have only one attracting surface. No other surface is magnetic. This construction makes it possible to limit the three-dimensional affect of the magnetic field so that no unintentional magnetization of the entire workpiece in contact with the pot magnet, or of the machine elements surrounding the magnet occurs.

Designs:
The deep pot magnets series:
09060, 09061 and 09063
have a core made of the permanent magnetic material AlNiCo, which is inserted for magnetic shielding into a soft iron pot with an intervening sleeve made of a non-magnetic material.
The shallow pot magnets series:
09064 and 09065
have a core made of the permanent magnetic ceramic material SrFE (hard ferrite) . This is also inserted into soft iron pot to create the desired magnetic shielding.
The pot magnets series:
09066 and 09067
have an SmCo core, an alloy of rare metallic elements together with cobalt. SmCo increases the magnetic force by three to five times that of AlNiCo or hard ferrit magnets by the same magnet size.

Magnetic strengths:
The values indicated in the table are minimum values that are achieved for a vertical pull-down with full-surface contact of the pot magnets on soft iron or low-carbon steel workpieces of sufficient thickness. By unclean pole faces or uneven workpieces, air gaps are formed which sharply decrease the attractive force. It is therefore advisable to always ensure a clean pole face and to clean it from time to time if necessary.

Diagram:
Reduction of the magnetic strength of a deep pot magnet with increasing air gap (non-magnetic intermediate layers have the same effect as air gaps).

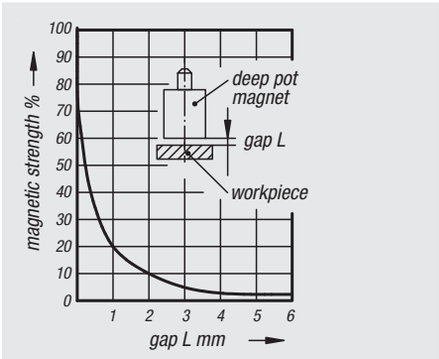

Mounting instructions for shielded pot magnets without pins

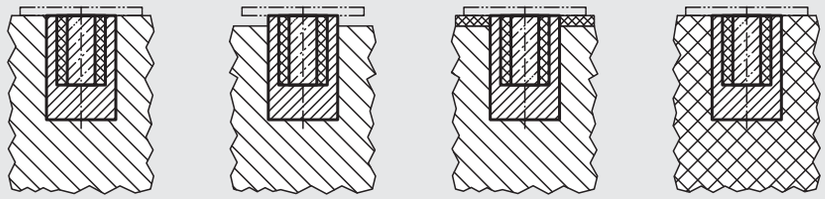

not correct | correct | correct | correct

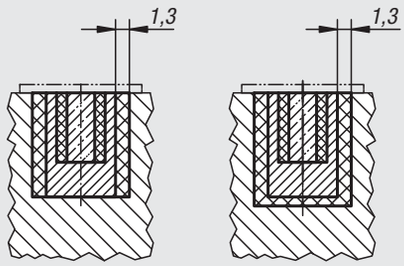

not correct | correct

SmCo pot magnets (deep or shallow) must not be mounted directly in iron, but must be screwed, glued, pressed or cast into a sleeve of non-magnetic material (see illustration below).

workpiece to be held

iron

Non-magnetic material such as MS, Al, Cu or plastic

Magnet series
shielded system

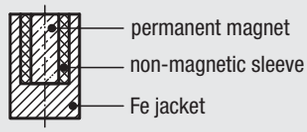

Installation or fastening possibilities of pot magnets

	Order No.	Description	System	Temperature* max. °C	Fastening possibility
from to	**09060-01** **09060-10**	deep pot magnet	shielded	450	Pressing in/shrink-fitting Gluing in
from to	**09061-01** **09061-09**	deep pot magnet	shielded	450	Soldering in (soft soldering)/ Gluing in
from to	**09063-01** **09063-10**	deep pot magnet	shielded	450	Riveting the pin in/ Screwing in
from to	**09064-01** **09064-10**	shallow pot magnet	shielded	100	Pressing in/gluing in
from to	**09065-01** **09065-26**	shallow pot magnet	shielded	100	Screwing in
from to	**09066-01** **09066-18**	shallow pot magnet	shielded	200	Pressing in/gluing in
from to	**09067-01** **09067-15**	deep pot magnet	shielded	200	Pressing in/gluing in/ Screwing in

* Long-term heating or alternating thermal stresses may lead to mechanical changes in the magnet system. In many cases they have no influence on the function. The same applies for chemical stresses (chemical baths, aggressive gases, etc).

09060

Magnets deep pot

AlNiCo with fitting tolerance

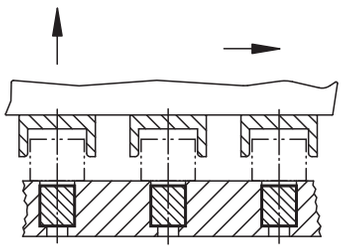

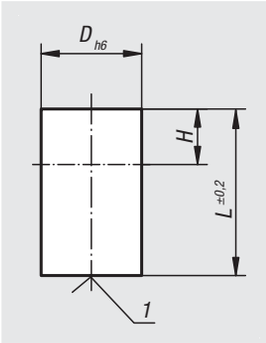

Material:
Housing, steel.
Magnetic core AlNiCo.

Version:
Bright.

Sample order:
nlm 09060-01

Note:
Shielded system. Diameter "D" ground to a h6 tolerance. Fastening possibilities by pressing, shrink-fit or gluing. Deep pot magnets can be shortened by the dimension "H" with no loss of attracting force.

Temperature range:
max. 450°C.

Drawing reference:
1) magnetic face

Order No.	D	L	H	Magnetic force N
09060-01	6	10	2	1,5
09060-02	8	12	3	3,5
09060-03	10	16	6	7
09060-04	13	18	7	10
09060-05	16	20	5	18
09060-06	20	25	6	42
09060-07	25	30	5	96
09060-08	32	35	3	180
09060-09	40	45	5	240
09060-10	50	50	2	420

09061

Magnets deep pot

AlNiCo without fitting tolerance

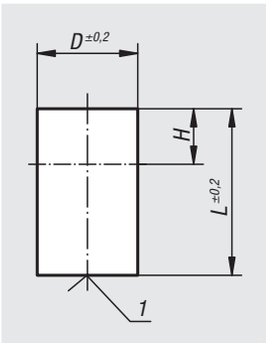

Material:
Housing, steel.
Magnetic core AlNiCo.

Version:
galvanized.

Sample order:
nlm 09061-01

Note:
Shielded system. Diameter "D" without fitting tolerance. Fastening possibilities are pressing, shrink-fit or gluing. Deep pot magnets can be shortened by the dimension "H" with no loss of attracting force.

Temperature range:
max. 450°C.

Drawing reference:
1) magnetic face

Order No.	D	L	H	Magnetic force N
09061-01	6	20	12	1,5
09061-02	8	20	11	3,5
09061-03	10	20	10	7
09061-04	13	20	9	10
09061-05	16	20	5	18
09061-06	20	25	6	42
09061-07	25	35	10	96
09061-08	32	40	8	180
09061-09	40	50	10	240

Magnets deep pot with pin

AlNiCo

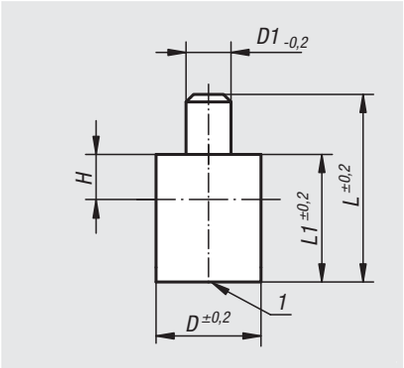

Material:
Housing, steel.
Magnetic core AlNiCo.

Version:
galvanized.

Sample order:
nlm 09063-01

Note:
Deep pot magnets with smooth pin, shielded system. The magnets can be shortened by the dimension "H" (to lengthen the pin) with no loss of attracting force.

Temperature range:
max. 450°C.

Drawing reference:
1) magnetic face

Order No.	D	D1	L	L1	H	Magnetic force N
09063-01	6	3	28	20	2	1,7
09063-02	8	3	28	20	3	4
09063-03	10	4	28	20	6	8,5
09063-04	13	4	28	20	7	12
09063-05	16	5	28	20	5	20
09063-06	20	6	33	25	6	50
09063-07	25	8	45	35	5	115
09063-08	32	10	50	40	3	200
09063-09	40	15	70	50	5	240
09063-10	50	18	85	60	2	420

Magnets shallow pot

hard ferrite

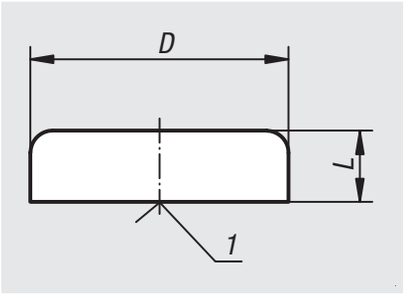

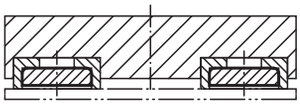

Material:
Housing, steel.
Magnetic core hard ferrite.

Version:
Housing, galvanized.

Sample order:
nlm 09064-01

Note:
Shallow pot magnets without threaded bush. These magnets are pressed or glued into the receiving holes.

Hairline cracks in the magnetic material are unavoidable for technical reasons in the D=80 version. They do not impair the attracting function of the magnets in any way.

Temperature range:
max. 200°C.

Drawing reference:
1) magnetic face

Order No.	D	L	Magnetic force N
09064-01	10 ±0,15	4,5	4
09064-02	13 ±0,15	4,5	10
09064-03	16 ±0,15	4,5	18
09064-04	20 ±0,15	6	30
09064-05	25 ±0,15	7	40
09064-06	32 ±0,20	7	80
09064-07	40 ±0,20	8	125
09064-08	50 ±0,20	10	220
09064-09	63 ±0,20	14	350
09064-10	80 ±0,25	18	600

09065

Magnets shallow pot with thread

hard ferrite

Material:
Housing, steel.
Magnetic core hard ferrite.

Version:
Housing, galvanized.

Sample order:
nlm 09065-01

Note:
Shallow pot magnets, shielded system.

Hairline cracks in the magnetic material are unavoidable for technical reasons in D=80, D=100 and D=125 versions. They do not impair the attracting function of the magnets in any way.

Temperature range:
max. 200°C.

Drawing reference:
1) magnetic face

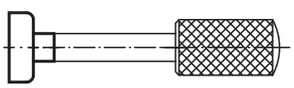

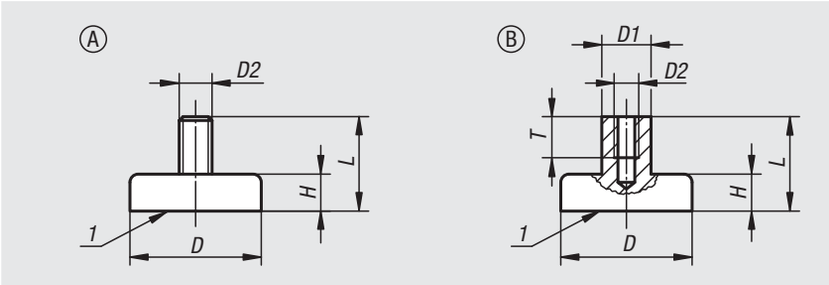

Order No. Form A	Order No. Form B	D	D1	D2	L	H	T	Magnetic force N
09065-21	**09065-01**	10 ±0,15	-/6	M3	11,5	4,5	-/5	4
09065-22	**09065-02**	13 ±0,15	-/6	M3	11,5	4,5	-/5	10
09065-23	**09065-03**	16 ±0,15	-/6	M3	11,5	4,5	-/5	18
09065-24	**09065-04**	20 ±0,15	-/6	M3	13	6	-/5	30
09065-25	**09065-05**	25 ±0,15	-/8	M4	15	7	-/6	40
09065-26	**09065-06**	32 ±0,20	-/8	M4	15	7	-/6	80
-	**09065-07**	40 ±0,20	10	M5	18	8	8	125
-	**09065-08**	50 ±0,20	12	M6	22	10	10	220
-	**09065-09**	63 ±0,20	15	M8	30	14	14	350
-	**09065-10**	80 ±0,25	20	M10	34	18	14	600
-	**09065-11**	99 ±0,25	22	M12	42	22	17	900
-	**09065-12**	125 ±0,25	25	M14	50	26	20	1300

09066

Magnets shallow pot

SmCo

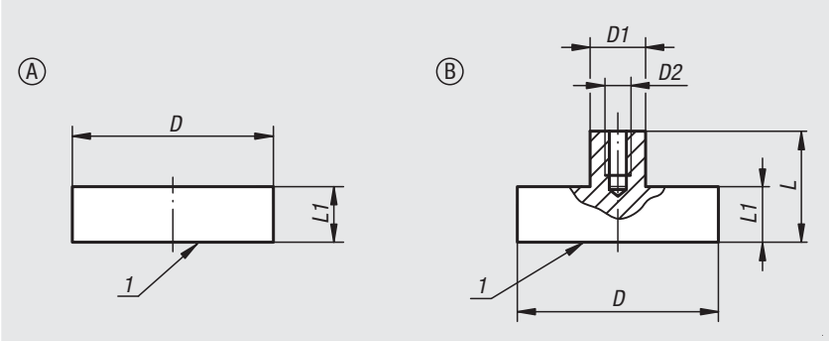

Material:
Housing, steel.
Magnetic core, SmCo.

Version:
Housing, galvanized.

Sample order:
nlm 09066-01

Note:
Shallow pot magnets, shielded system. Magnets with an SmCo core have three to five times the attracting force of AlNiCo or hard ferrite magnets.

Temperature range:
max. 200°C.

Drawing reference:
1) magnetic face

Order No. Form A	Order No. Form B	D	D1	D2	L	L1	Magnetic force N
09066-01	**09066-11**	6 ±0,15	-/6	-/M3	-/11,5	4,5	5
09066-02	**09066-12**	8 ±0,15	-/6	-/M3	-/11,5	4,5	11
09066-03	**09066-13**	10 ±0,15	-/6	-/M3	-/11,5	4,5	20
09066-04	**09066-14**	13 ±0,15	-/6	-/M3	-/11,5	4,5	40
09066-05	**09066-15**	16 ±0,15	-/6	-/M4	-/11,5	4,5	60
09066-06	**09066-16**	20 ±0,15	-/8	-/M4	-/13	6	90
09066-07	**09066-17**	25 ±0,15	-/8	-/M4	-/14	7	150
09066-08	**09066-18**	32 ±0,20	-/10	-/M5	-/15,5	7	220

Magnets deep pot

SmCo

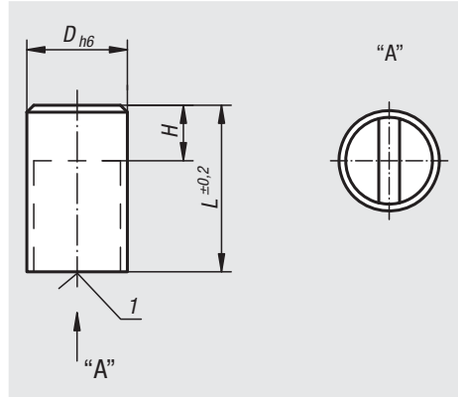

Material:
Housing brass.
Magnetic core SmCo.

Sample order:
nlm 09067-01

Note:
Smooth design, shielded system. Diameter "D" ground with h6 tolerance. Under no circumstances may SmCo magnets be pressed directly into iron, as otherwise loss of attractive force due to magnetic short circuits occurs. SmCo magnets are especially suitable for direct use in spot-welding machines, as no demagnetisation occurs.
Deep pot magnets can be shortened by the dimension "H" with no loss of attractive force.

Temperature range:
max. 200°C.

Drawing reference:
1) magnetic face

Order No.	D	L	H	Magnetic force N	Distance to iron wall/mm
09067-01	6	20	10	8	1,5
09067-03	8	20	10	22	1,5
09067-05	10	20	8	40	2
09067-07	13	20	6	60	2,5
09067-09	16	20	2	125	3
09067-11	20	25	5	250	4
09067-13	25	35	7	400	5
09067-15	32	40	4,5	600	6

Magnets deep pot with internal thread

NdFeB

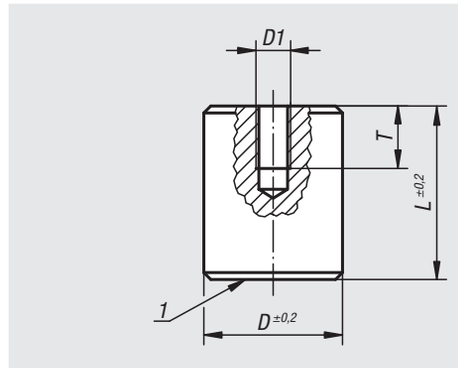

Material:
Housing, steel.
Magnetic core NdFeB.

Version:
Housing, galvanized.

Sample order:
nlm 09068-01

Note:
Shielded system. Deep pot magnets are used for mounting in steel and iron. This requirement is principally stipulated in plant and machine construction.
Can also be used in blind holes.

Size D=50 has 4 magnets Ø18 mm.

Temperature range:
max. 80°C.

Drawing reference:
1) magnetic face

Order No.	D	D1	L	T	Can be shortened by (mm)	Magnetic force N
09068-01	8	M3	12	5	3	12
09068-02	10	M4	16	7	7	24
09068-03	13	M4	18	7	3	60
09068-04	16	M4	20	7	6	90
09068-05	20	M5	25	9	9	135
09068-06	25	M6	30	9	10	190
09068-07	35	M8	40	13	10	300
09068-08	50	M12	50	13	13	550

Magnets shallow pot

NdFeB

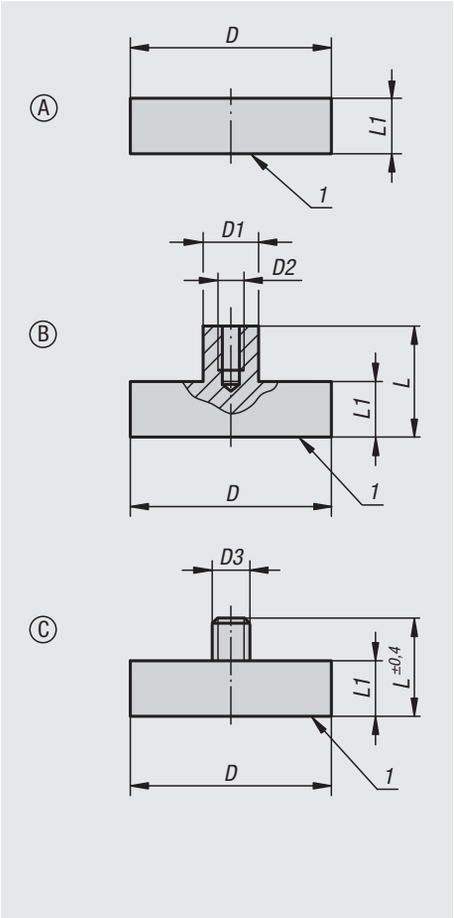

Material:
Housing, steel.
Magnetic core NdFeB.

Version:
Housing, galvanized.

Sample order:
nlm 09069-01

Note:
Shielded system. With the permanent magnetic material NdFeB the attracive force increases by ca. 10-20% compared with SmCo.

Temperature range:
max. 80°C.

Drawing reference:
1) magnetic face

Order No.	Form	D	D1	D2	D3	L	L1	Magnetic force N
09069-01	A	6 ±0,15	-	-	-	-	4,5	5
09069-02	A	8 ±0,15	-	-	-	-	4,5	13
09069-03	A	10 ±0,15	-	-	-	-	4,5	25
09069-04	A	13 ±0,15	-	-	-	-	4,5	60
09069-05	A	16 ±0,15	-	-	-	-	4,5	95
09069-06	A	20 ±0,15	-	-	-	-	6	140
09069-07	A	25 ±0,15	-	-	-	-	7	200
09069-08	A	32 ±0,20	-	-	-	-	7	350
09069-11	B	6 ±0,15	6	M3	-	11,5	4,5	5
09069-12	B	8 ±0,15	6	M3	-	11,5	4,5	13
09069-13	B	10 ±0,15	6	M3	-	11,5	4,5	25
09069-14	B	13 ±0,15	6	M3	-	11,5	4,5	60
09069-15	B	16 ±0,15	6	M4	-	11,5	4,5	95
09069-16	B	20 ±0,15	8	M4	-	13	6	140
09069-17	B	25 ±0,15	8	M4	-	14	7	200
09069-18	B	32 ±0,20	10	M5	-	15,5	7	350
09069-23	C	10 ±0,15	-	-	M3	11,5	4,5	25
09069-24	C	13 ±0,15	-	-	M5	12,5	4,5	60
09069-25	C	16 ±0,15	-	-	M6	12,5	4,5	95
09069-26	C	20 ±0,15	-	-	M6	16	6	140
09069-27	C	25 ±0,15	-	-	M6	17	7	200
09069-28	C	32 ±0,20	-	-	M6	17	7	350

09070

Magnets shallow pot with counterbore

hard ferrite

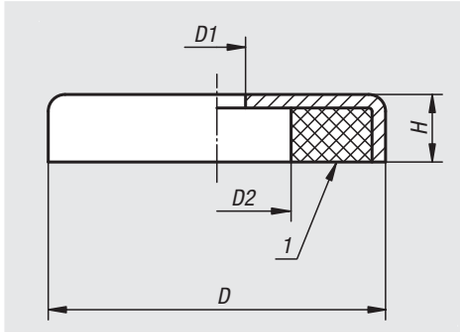

Material:
Housing, steel.
Magnetic core hard ferrite.

Version:
Housing, galvanized.

Sample order:
nlm 09070-50

Note:
Shielded system.

Temperature range:
max. 200°C.

Drawing reference:
1) magnetic face

Order No.	D	D1	D2	H	Magnetic force N
09070-50	50 ±0,20	8,5	22	10	180
09070-63	63 ±0,20	6,5	24	14	290
09070-80	80 ±0,25	6,5	11,5	18	540

09071

Magnets shallow pot with countersink

hard ferrite

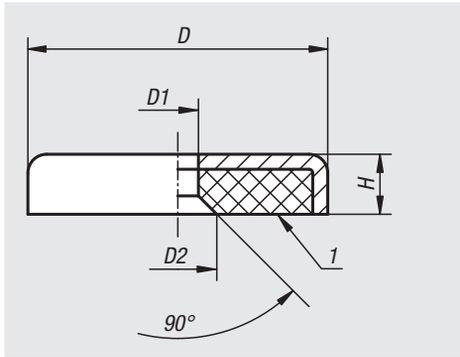

Material:
Housing, steel.
Magnetic core hard ferrite.

Version:
Housing, galvanized.

Sample order:
nlm 09071-01

Note:
Shielded system.

Temperature range:
max. 200°C.

Drawing reference:
1) magnetic face

Order No.	D	D1	D2	H	Magnetic force N
09071-01	16 ±0,15	3,3	7	4,5	14
09071-02	20 ±0,15	4,2	9	6	27
09071-03	25 ±0,15	5,5	11	7	36
09071-04	32 ±0,20	5,5	11	7	72
09071-05	40 ±0,20	5,5	11	8	90

09072

Magnets shallow pot with internal thread

NdFeB

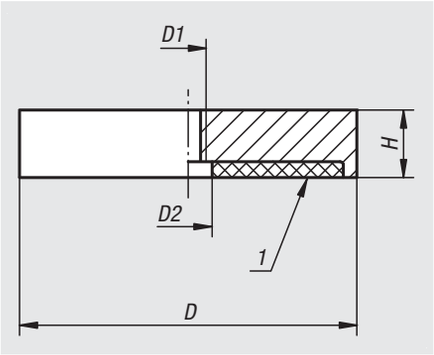

Material:
Housing, steel.
Magnetic core NdFeB.

Version:
Housing, galvanized.

Sample order:
nlm 09072-01

Note:
Shielded system

Temperature range:
max. 80°C.

Drawing reference:
1) magnetic face

Order No.	D	D1	D2	H	Magnetic force N
09072-01	32	M5	5,5	7	330
09072-02	40	M5	10,5	8	550
09072-03	63	M10	11,7	14	1100
09072-04	75	M10	13	15	1750

09094

Magnets deep pot

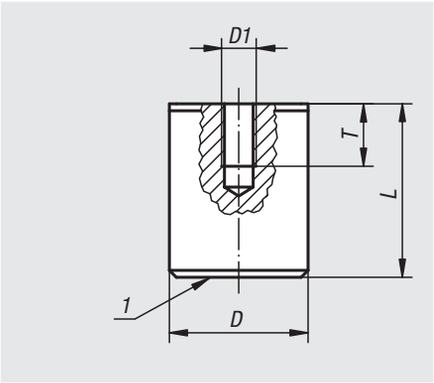

Material:
Housing, steel.
Magnetic core AlNiCo.

Version:
Housing painted red.

Sample order:
nlm 09094-01

Note:
Hard magnet in aluminium housing and steel jacket. Shielded system. Pot magnets are used for retaining, lifting and mounting in fixtures. Due to the painted surface, the diameter D can be up to +0.8 mm.

Temperature range:
max. 450°C.

Drawing reference:
1) magnetic face

Order No.	D	D1	L	T	Magnetic force N
09094-01	17	M6	16	4	18
09094-02	21	M6	19	5	28
09094-03	27	M6	25	6	65
09094-04	35	M6	30	9	115
09094-05	65	M12	43	13	400

Magnets shallow pot

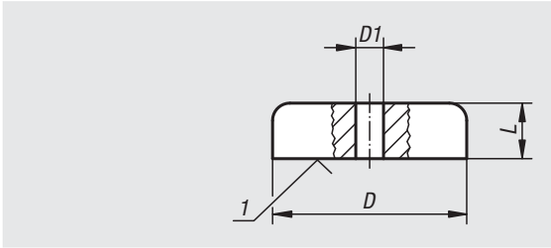

Material:
Housing, steel.
Magnetic core AlNiCo.

Version:
Housing painted red.

Sample order:
nlm 09096-01

Note:
Shielded system. Shallow pot magnets are used in fixtures with minimal space.

Temperature range:
max. 450°C.

On request:
Other colours.

Drawing reference:
1) magnetic face

Order No.	D	D1	L	Magnetic force N
09096-01	19	3,5	8	30
09096-02	29	5	9	55
09096-03	38	5	10,5	95

Magnets button

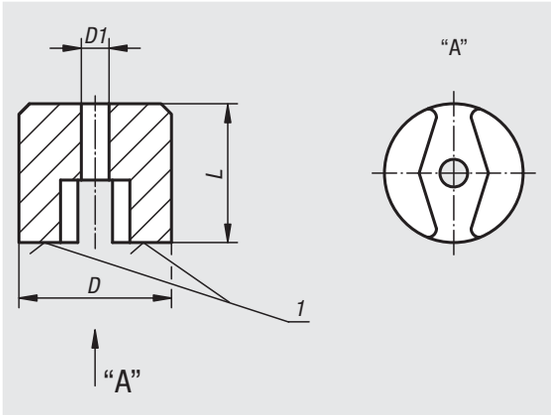

Material:
Magnetic core AlNiCo.

Version:
painted red.

Sample order:
nlm 09098-01

Note:
Split attractive surface with through hole. Non-shielded system. Button magnets are used in laboratories, inspection rooms and for holding metal objects.

Temperature range:
max. 450°C.

Drawing reference:
1) magnetic face

Order No.	D	D1	L	Magnetic force N
09098-01	13	4,2	10	7
09098-02	19	5,4	13	19
09098-03	25	5,4	16	29
09098-04	32	7	25	66

09100

Magnets strong

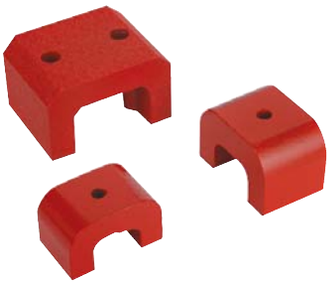

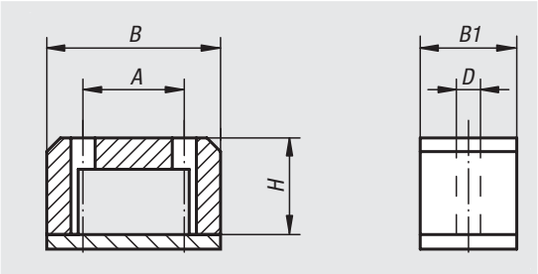

Material:
Magnetic core AlNiCo.

Version:
painted red.

Sample order:
nlm 09100-01

Note:
Horseshoe magnets with high attractive force. Non-shielded system. The magnets are supplied with a galvanised protective plating and are used for holding, sorting and lifting.
Sizes 1, 2 and 3 have only one attachment hole in the centre.

Temperature range:
max. 450°C.

Order No.	Size	A	B	B1	D	H	Magnetic force N
09100-01	1	-	30	20	5	20	45
09100-02	2	-	40	25	5	25	90
09100-03	3	-	45	29	5	30	120
09100-04	4	32	57	45	8	35	230
09100-05	5	38	70	57	8	41	320

09110

Protective rubber caps

for shallow pot magnets

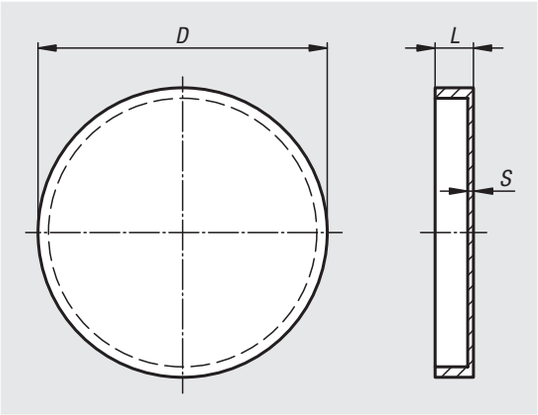

Material:
Synthetic rubber.

Version:
black.

Sample order:
nlm 09110-50

Note:
For protecting sensitive surfaces. The rubber protective caps are slipped over the magnetic surfaces. The shear force with which the magnet can be displaced is doubled and achieves almost the original attractive force of the magnet.

Temperature range:
max. 60°C.

Order No.	D	L	S
09110-50	52	6	0,5
09110-63	65	8	0,5
09110-80	83	11	0,5

Magnets shallow pot with internal thread

NdFeB, with rubber protective jacket

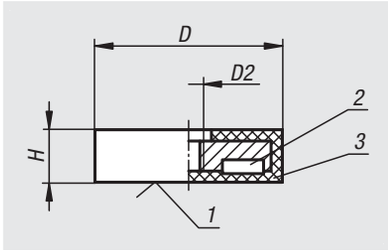

Material:
Housing, steel.
Magnetic core NdFeB (neodym).
Protective rubber jacket, synthetic rubber.

Version:
Housing, galvanized.
Black protective rubber jacket.

Sample order:
nlm 09112-01

Note:
Magnet with internal thread. Shielded system. With rubber protective jacket for protecting sensitive surfaces. The coefficient of friction is increased by the rubber jacket so that high lateral friction is achieved.

Temperature range:
max. 60°C.

Drawing reference:
1) magnetic face
2) magnet
3) rubber

Order No.	D	D2	H	Magnetic force N
09112-01	22	M4	6	35
09112-02	31	M5	6	75
09112-03	43	M4	6	85
09112-04	66	M6	8,5	180
09112-05	88	M6	8	420

Magnets shallow pot with tapped pin

NdFeB, with rubber protective jacket

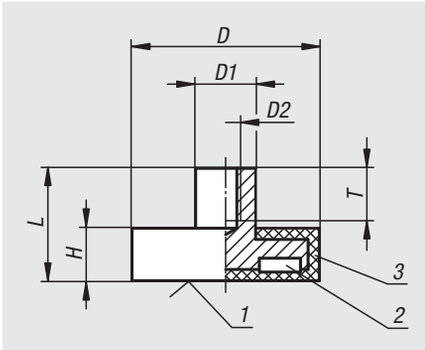

Material:
Housing, steel.
Magnetic core NdFeB (neodym).
Protective rubber jacket, synthetic rubber.

Version:
Housing, galvanized.
Black protective rubber jacket.

Sample order:
nlm 09114-01

Note:
Shallow pot magnets with tapped pin, shielded system. With rubber protective jacket for protecting sensitive surfaces. The coefficient of friction is increased by the rubber jacket so that high lateral friction is achieved.

Temperature range:
max. 60°C.

Drawing reference:
1) magnetic face
2) magnet
3) rubber

Order No.	D	D1	D2	H	L	T	Magnetic force N
09114-01	12	8	M4	7	14,8	6	10
09114-02	22	8	M4	6	11,5	6	50
09114-03	31	8	M4	6	11,5	5	75
09114-04	43	8	M4	6	10,5	5	85
09114-05	66	10	M5	8,2	15	8	180
09114-06	88	12	M8	8,2	17	11	420

09116

Magnets shallow pot with threaded pin

NdFeB, with rubber protective jacket

Material:
Housing, steel.
Magnetic core NdFeB (neodym).
Protective rubber jacket, synthetic rubber.

Version:
Housing, galvanized.
Black protective rubber jacket.

Sample order:
nlm 09116-01

Note:
Shallow pot magnets with threaded pin, shielded system. With rubber protective jacket for protecting sensitive surfaces. The coefficient of friction is increased by the rubber jacket, so that high lateral friction is achieved.

Temperature range:
max. 60°C.

Drawing reference:
1) magnetic face
2) magnet
3) rubber

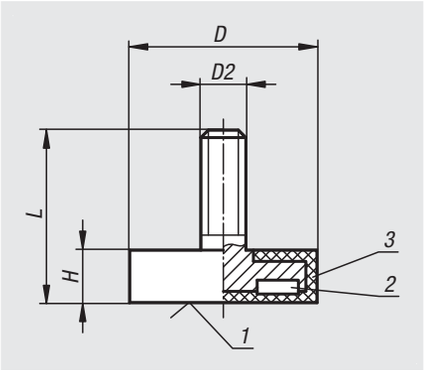

Order No.	D	D2	H	L	Magnetic force N
09116-01	22	M4	6	12,5	50
09116-02	43	M6	6	21	85
09116-03	66	M8	8,2	23	180
09116-04	88	M8	8,2	23,5	420

09118

Magnets shallow pot with through hole

NdFeB, with rubber protective jacket

Material:
Housing, steel.
Magnetic core NdFeB (neodym).
Protective rubber jacket, synthetic rubber.

Version:
Housing, galvanized.
Black protective rubber jacket.

Sample order:
nlm 09118-01

Note:
Shallow pot magnets, shielded system. With rubber protective jacket for protecting sensitive surfaces. The coefficient of friction is increased by the rubber jacket so that high lateral friction is achieved.

Temperature range:
max. 60°C.

Drawing reference:
1) magnetic face
2) magnet
3) rubber

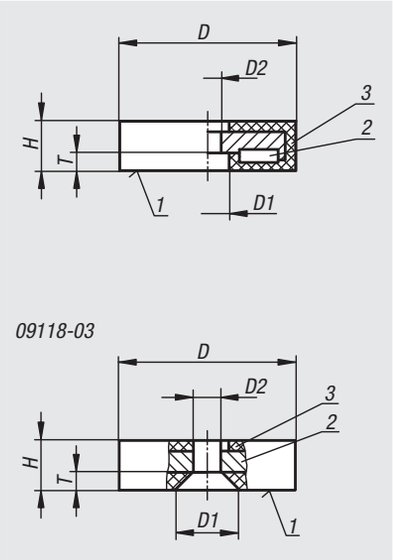

Order No.	D	D1	D2	H	T	Magnetic force N
09118-01	22	8,2	4	6	3,5	35
09118-02	31	9	6	6	3,5	75
09118-03	43	12,8	7,5	6	-	85
09118-04	57	25,3	8	7,6	3,3	175
09118-05	66	22	5,5	8,5	3,2	210

09150

Magnetic Pickup

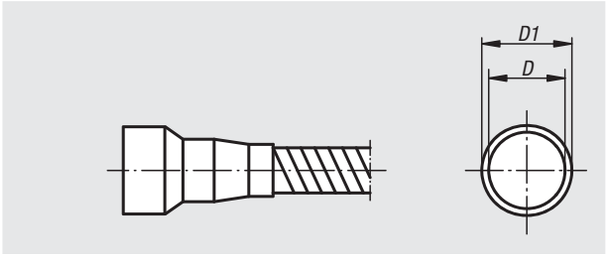

Version:
Strong permanent magnet with flexible brass tube and black plastic grip. Surface chromed.

Sample order:
nlm 09150-04

Note:
Pickup magnets are primarily used for removing or searching for steel parts in inaccessible places.

Order No.	Size	D	D1	total length mm	Magnetic force N
09150-01	1	6	8	450	5
09150-02	2	10	12	450	10
09150-03	3	13	15	520	18
09150-04	4	17	19	520	30

09210

Magnetic base permanent

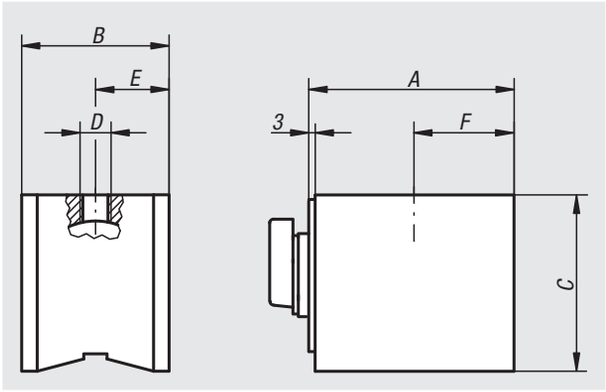

Version:
Permanent magnetic base with high magnetic force.
On/Off switch.
Surface black.

Sample order:
nlm 09210-03

Note:
Permanent magnetic bases are used in fixtures as retaining magnets, as gauge stands etc.

Order No.	A	B	C	D	E	F	Magnetic force N
09210-01	61	50	55	M8 x 8	25	29	600
09210-02	76	50	55	M8 x 8	25	36,5	900
09210-03	76	50	55	M10 x 8	25	36,5	900

Notes

10000

Aluminium profiles
Connectors
Covers
Special elements

Technical information for aluminium profiles

Type I and Type B

Tolerances:
Form deviations such as straightness and flatness tolerance acc. to DIN EN 12020 Part 2.

Surface:
The aluminium profiles are natural colour anodized making them permanently scratch-resistant and corrosion proof. The all-round anodize film makes saw cuts particularly low burr.
Anodizing: E6EV1
Film thickness: 10 µm

Mechanical values:
(apply only in thrust axis)
Tensile strength Rm: min. 245 N/mm^2
Yield point Rp 0.2: min. 195 N/mm^2
A5: 10% rupture stress
A10: 8% rupture stress
Density: 2.7 kg/dm^3
Linear expansion coefficient: 23.6x10-6 1/K
Elasticity module E: approximately 70,000 N/mm^2
Hardness: approximately 75 HB -2.5/187.5

Slot sizes and grid pitches

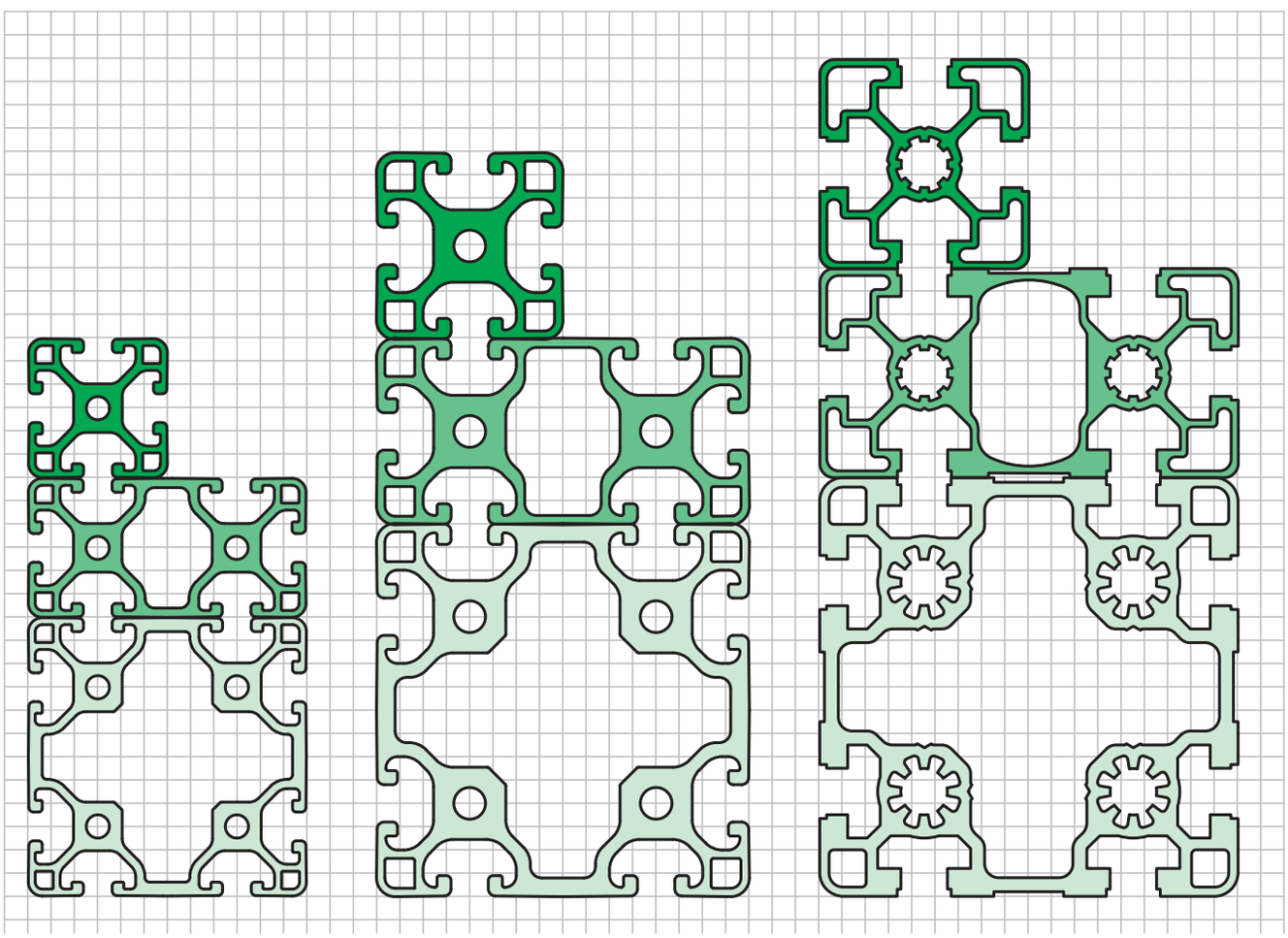

Aluminium profiles 30x30 light

Type I

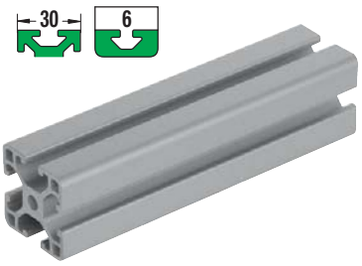

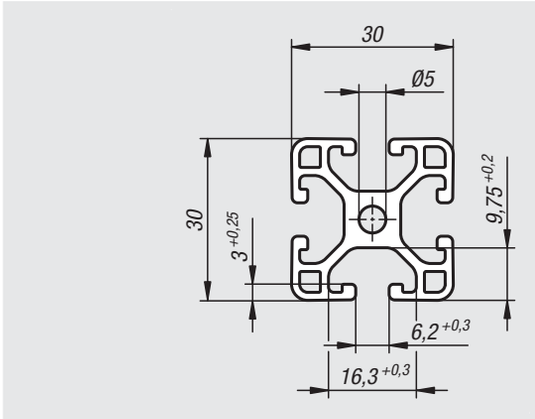

Material:
Aluminium EN AW-6063 T66 (AlMgSi 0.5 F25)

Version:
Artificially aged, natural colour anodized.

Sample order:
nlm 10025-063030X*
* Include length only in full mm increments.
Maximum available length 6000 mm.

Note:
Lightweight aluminium profile for weight-optimised constructions.

On request:
Mitre cuts 15°, 30° and 45°.

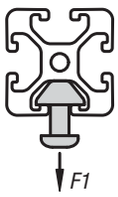

Order No.	Slot width	Profile	Ix cm^4	Iy cm^4	Wx cm^3	Wy cm^3	Profile area cm^2	F1 max. kN	Approx. weight kg/m
10025-063030X****	6	30x30	2,9	2,9	1,94	1,94	3,43	0,5	0,93

Aluminium profiles 30x60 light

Type I

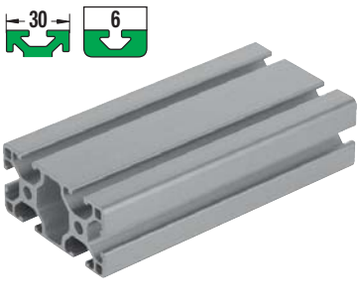

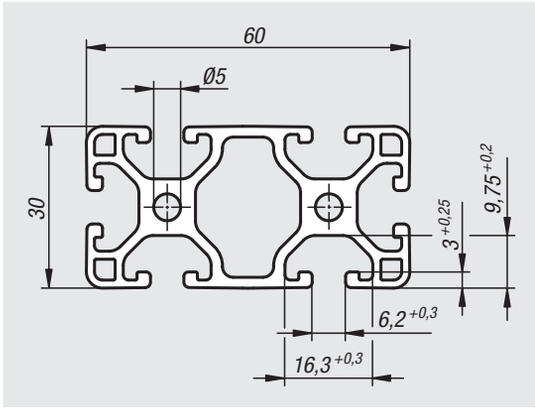

Material:
Aluminium EN AW-6063 T66 (AlMgSi 0.5 F25)

Version:
Artificially aged, natural colour anodized.

Sample order:
nlm 10025-063060X*
* Include length only in full mm increments.
Maximum available length 6000 mm.

Note:
Lightweight aluminium profile for weight-optimised constructions.

On request:
Mitre cuts 15°, 30° and 45°.

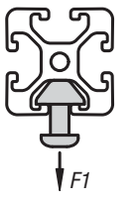

Order No.	Slot width	Profile	Ix cm^4	Iy cm^4	Wx cm^3	Wy cm^3	Profile area cm^2	F1 max. kN	Approx. weight kg/m
10025-063060X****	6	30x60	5,54	21,22	3,69	7,07	6,13	0,5	1,65

Aluminium profiles 60x60 light

Type I

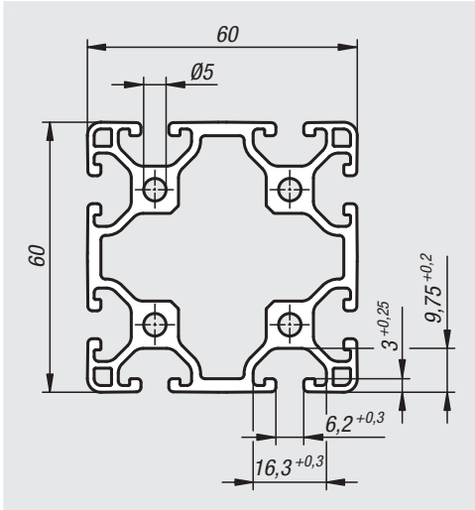

Material:
Aluminium EN AW-6063 T66 (AlMgSi 0.5 F25)

Version:
Artificially aged, natural colour anodized.

Sample order:
nlm 10025-066060X*
* Include length only in full mm increments.
Maximum available length 6000 mm.

Note:
Lightweight aluminium profile for weight-optimised constructions.

On request:
Mitre cuts 15°, 30° and 45°.

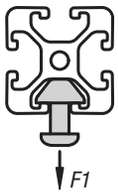

Order No.	Slot width	Profile	Ix cm^4	Iy cm^4	Wx cm^3	Wy cm^3	Profile area cm^2	F1 max. kN	Approx. weight kg/m
10025-066060X****	6	60x60	39,47	39,47	13,16	13,16	10,01	0,5	2,70

Notes

Aluminium profiles 40x40 light

Type I

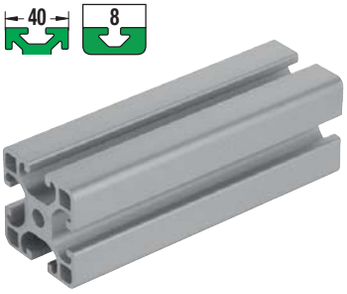

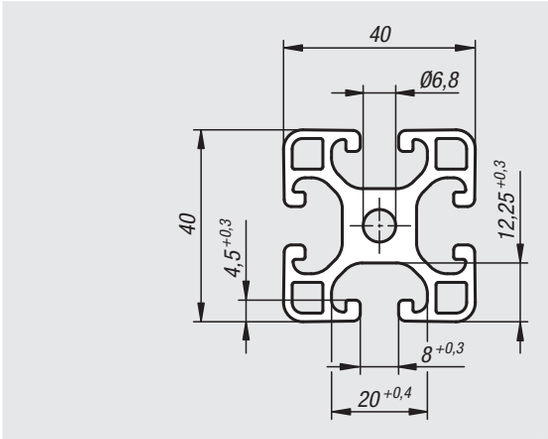

Material:
Aluminium EN AW-6063 T66 (AlMgSi 0.5 F25)

Version:
Artificially aged, natural colour anodized.

Sample order:
nlm 10045-084040X*
* Include length only in full mm increments.
Maximum available length 6000 mm.

Note:
Lightweight aluminium profile for weight-optimised constructions.

On request:
Mitre cuts 15°, 30° and 45°.

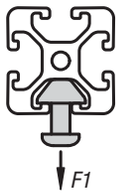

Order No.	Slot width	Profile	Ix cm⁴	Iy cm⁴	Wx cm³	Wy cm³	Profile area cm²	F1 max. kN	Approx. weight kg/m
10045-084040X****	8	40x40	9,1	9,1	4,55	4,55	6,47	2,5	1,75

10045

Aluminium profiles 40x80 light

Type I

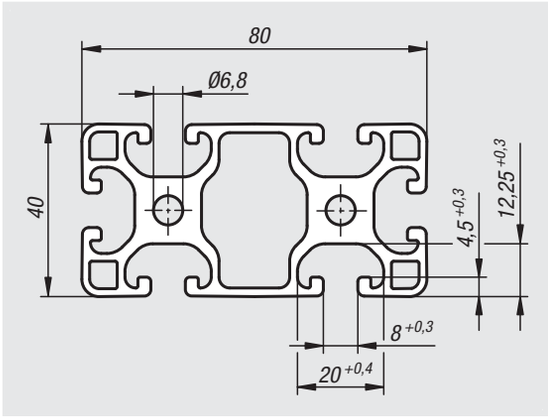

Material:
Aluminium EN AW-6063 T66 (AlMgSi 0.5 F25)

Version:
Artificially aged, natural colour anodized.

Sample order:
nlm 10045-084080X*
* Include length only in full mm increments.
Maximum available length 6000 mm.

Note:
Lightweight aluminium profile for weight-optimised constructions.

On request:
Mitre cuts 15°, 30° and 45°.

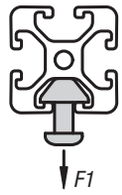

Order No.	Slot width	Profile	Ix cm⁴	Iy cm⁴	Wx cm³	Wy cm³	Profile area cm²	F1 max. kN	Approx. weight kg/m
10045-084080X****	8	40x80	16,77	70,2	8,45	17,56	11,3	2,5	3,08

Aluminium profiles 80x80 light

Type I

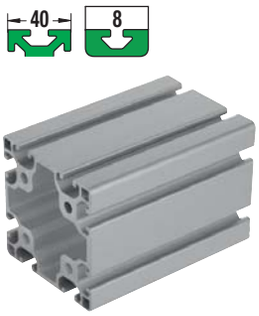

Material:
Aluminium EN AW-6063 T66 (AlMgSi 0.5 F25)

Version:
Artificially aged, natural colour anodized.

Sample order:
nlm 10045-088080X*
* Include length only in full mm increments.
Maximum available length 6000 mm.

Note:
Lightweight aluminium profile for weight-optimised constructions.

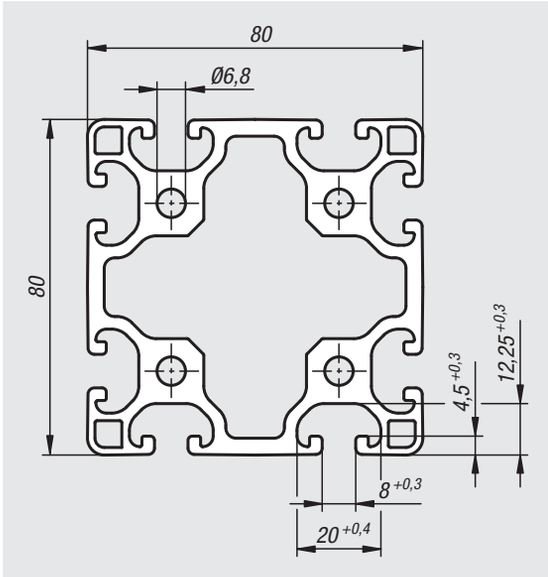

On request:
Mitre cuts 15°, 30° and 45°.

Order No.	Slot width	Profile	Ix cm^4	Iy cm^4	Wx cm^3	Wy cm^3	Profile area cm^2	F1 max. kN	Approx. weight kg/m
10045-088080X****	8	80x80	130,1	130,1	33,2	33,2	19,3	2,5	2,17

Notes

Aluminium profiles 16x40

Type I

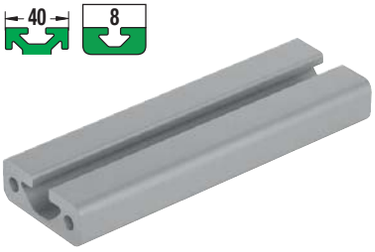

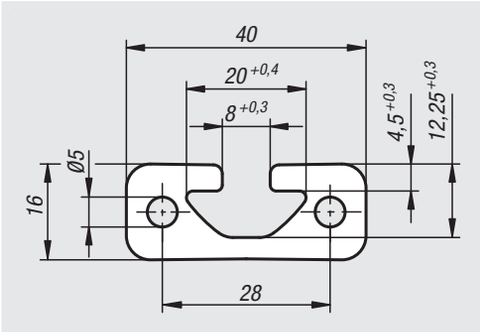

Material:
Aluminium EN AW-6063 T66 (AlMgSi 0.5 F25)

Version:
Artificially aged, natural colour anodized.

Sample order:
nlm 10048-081640X*
* Include length only in full mm increments.
Maximum available length 6000 mm.

Note:
Aluminium profile for general constructions.

On request:
Mitre cuts 15°, 30° and 45°.

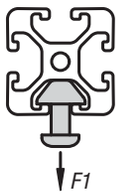

Order No.	Slot width	Profile	Ix cm⁴	Iy cm⁴	Wx cm³	Wy cm³	Profile area cm²	F1 max. kN	Approx. weight kg/m
10048-081640X****	8	16x40	1,06	6,75	1,25	3,37	4,15	5	1,12

10048

Aluminium profiles 40x40

Type I

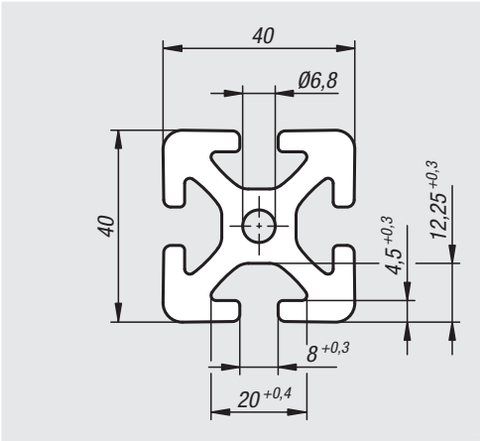

Material:
Aluminium EN AW-6063 T66 (AlMgSi 0.5 F25)

Version:
Artificially aged, natural colour anodized.

Sample order:
nlm 10048-084040X*
* Include length only in full mm increments.
Maximum available length 6000 mm.

Note:
Aluminium profile for general constructions.

On request:
Mitre cuts 15°, 30° and 45°.

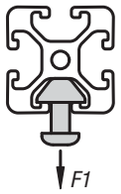

Order No.	Slot width	Profile	Ix cm⁴	Iy cm⁴	Wx cm³	Wy cm³	Profile area cm²	F1 max. kN	Approx. weight kg/m
10048-084040X****	8	40x40	13,85	13,85	6,95	6,95	9,05	2,5	2,45

Aluminium profiles 40x80

Type I

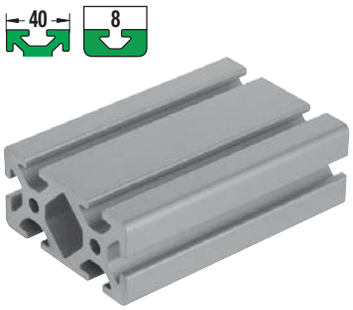

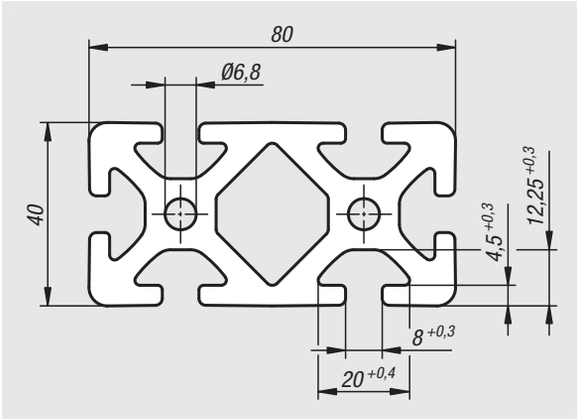

Material:
Aluminium EN AW-6063 T66 (AlMgSi 0.5 F25)

Version:
Artificially aged, natural colour anodized.

Sample order:
nlm 10048-084080X*
* Include length only in full mm increments.
Maximum available length 6000 mm.

Note:
Aluminium profile for general constructions.

On request:
Mitre cuts 15°, 30° and 45°.

Order No.	Slot width	Profile	Ix cm⁴	Iy cm⁴	Wx cm³	Wy cm³	Profile area cm²	F1 max. kN	Approx. weight kg/m
10048-084080X****	8	40x80	26,7	101,02	13,39	25,15	16,52	5	4,51

Aluminium profiles 80x80

Type I

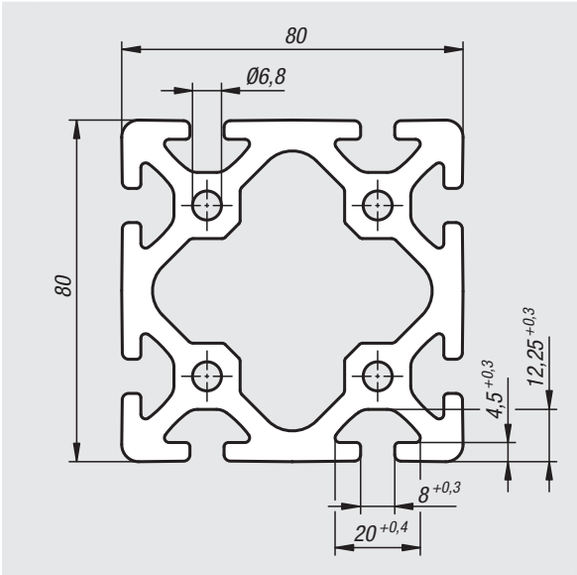

Material:
Aluminium EN AW-6063 T66 (AlMgSi 0.5 F25)

Version:
Artificially aged, natural colour anodized.

Sample order:
nlm 10048-088080X*
* Include length only in full mm increments.
Maximum available length 6000 mm.

Note:
Aluminium profile for general constructions.

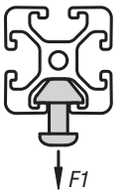

On request:
Mitre cuts 15°, 30° and 45°.

Order No.	Slot width	Profile	Ix cm⁴	Iy cm⁴	Wx cm³	Wy cm³	Profile area cm²	F1 max. kN	Approx. weight kg/m
10048-088080X****	8	80x80	187,8	187,8	46,93	46,93	26,65	2,5	7,20

Aluminium profiles D50

type I, tube

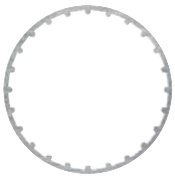

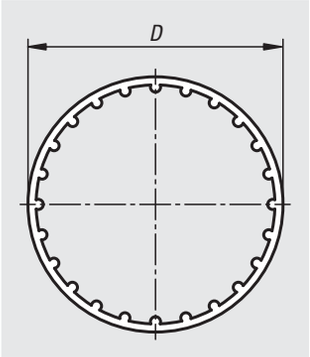

Material:
Aluminium EN AW-6063 T66 (AlMgSi 0.5 F25)

Version:
Artificially aged, natural colour anodized.

Sample order:
nlm 10050-50x1000

Note:
Aluminium profile for general structures.
The round tube, also referred to as a profile tube forms a feed roller when used in combination with bearing flanges (10400).

Order No.	Profile	D	L	Ix cm^4	Iy cm^4	Wx cm^3	Wy cm^3	Approx. weight kg/m
10050-50X1000	50	50	1000	8,16	8,16	3,26	3,26	0,760

Notes

Aluminium profiles 30x30

Type B

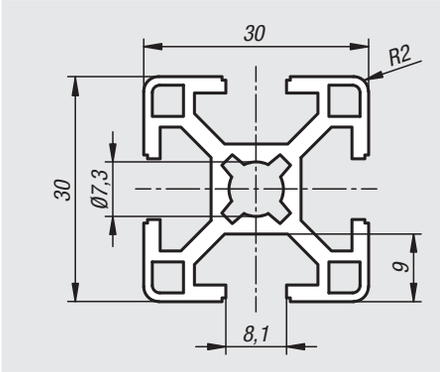

Material:
Aluminium EN AW-6063 T66 (AlMgSi 0.5 F25)

Version:
Artificially aged, natural colour anodized.

Sample order:
nlm 10140-083030X*
* Include length only in full mm increments.
Maximum available length 6000 mm.

Note:
Aluminium profile for general constructions.

On request:
Mitre cuts 15°, 30° and 45°.

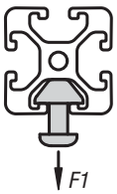

Order No.	Slot width	Profile	Ix cm^4	Iy cm^4	Wx cm^3	Wy cm^3	Profile area cm^2	F1 max. kN	Approx. weight kg/m
10140-083030X****	8	30x30	2,77	2,77	1,85	1,85	3,14	6	0,85

Aluminium profiles 30x60

Type B

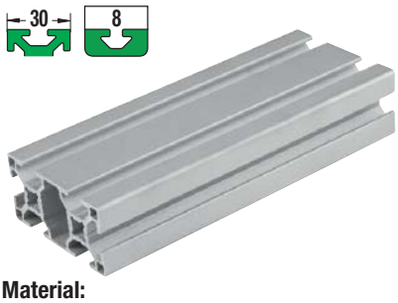

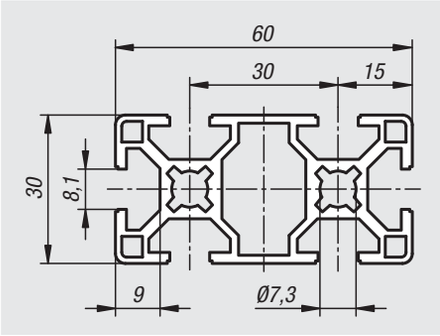

Material:
Aluminium EN AW-6063 T66 (AlMgSi 0.5 F25)

Version:
Artificially aged, natural colour anodized.

Sample order:
nlm 10140-083060X*
* Include length only in full mm increments.
Maximum available length 6000 mm.

Note:
Aluminium profile for general constructions.

On request:
Mitre cuts 15°, 30° and 45°.

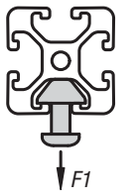

Order No.	Slot width	Profile	Ix cm^4	Iy cm^4	Wx cm^3	Wy cm^3	Profile area cm^2	F1 max. kN	Approx. weight kg/m
10140-083060X****	8	30x60	19,66	5,09	6,55	3,39	5,53	6	1,49

Aluminium profiles 40x40 light

Type B

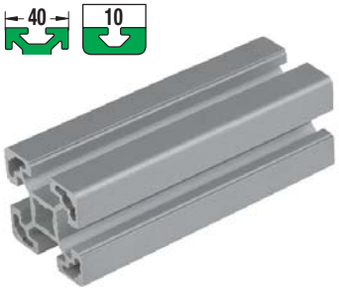

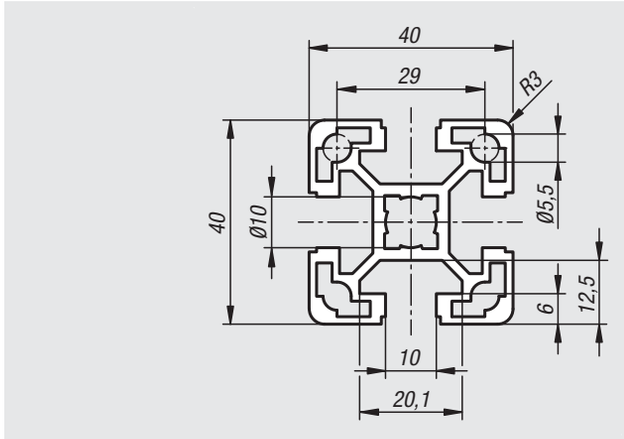

Material:
Aluminium EN AW-6063 T66 (AlMgSi 0.5 F25)

Version:
Artificially aged, natural colour anodized.

Sample order:
nlm 10142-104040X*
* Include length only in full mm increments.
Maximum available length 6000 mm.

Note:
Lightweight aluminium profile for weight-optimised constructions.

On request:
Mitre cuts 15°, 30° and 45°.

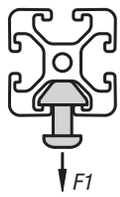

Order No.	Slot width	Profile	Ix cm^4	Iy cm^4	Wx cm^3	Wy cm^3	Profile area cm^2	F1 max. kN	Approx. weight kg/m
10142-104040X****	10	40x40	9,06	9,06	4,53	4,53	5,61	7	1,51

Aluminium profiles 40x80 light

Type B

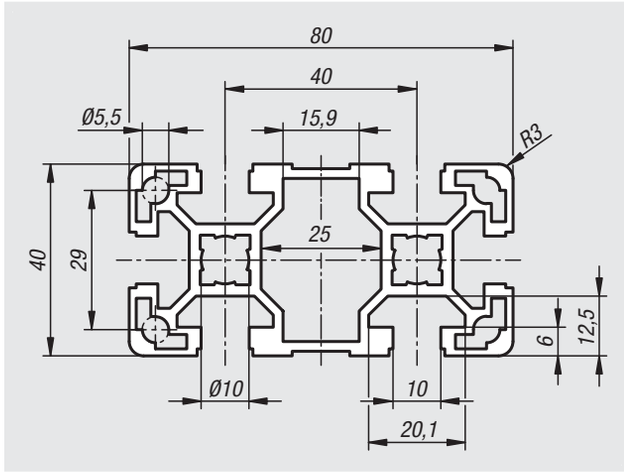

Material:
Aluminium EN AW-6063 T66 (AlMgSi 0.5 F25)

Version:
Artificially aged, natural colour anodized.

Sample order:
nlm 10142-104080X*
* Include length only in full mm increments.
Maximum available length 6000 mm.

Note:
Lightweight aluminium profile for weight-optimised constructions.

On request:
Mitre cuts 15°, 30° and 45°.

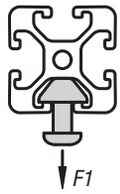

Order No.	Slot width	Profile	Ix cm^4	Iy cm^4	Wx cm^3	Wy cm^3	Profile area cm^2	F1 max. kN	Approx. weight kg/m
10142-104080X****	10	40x80	63,24	17,23	15,81	8,61	9,86	7	2,67

Aluminium profiles 45x45 light

Type B

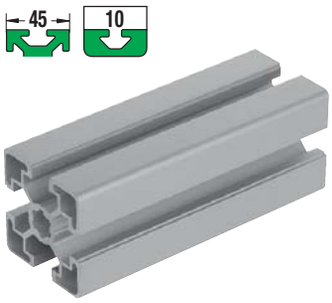

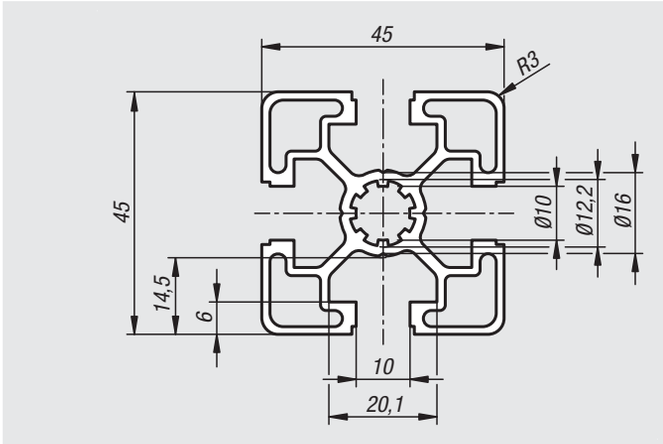

Material:
Aluminium EN AW-6063 T66 (AlMgSi 0.5 F25)

Version:
Artificially aged, natural colour anodized.

Sample order:
nlm 10157-104545X*
* Include length only in full mm increments.
Maximum available length 6000 mm.

Note:
Lightweight aluminium profile for weight-optimised constructions.

On request:
Mitre cuts 15°, 30° and 45°.

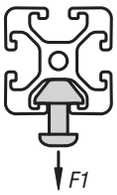

Order No.	Slot width	Profile	Ix cm^4	Iy cm^4	Wx cm^3	Wy cm^3	Profile area cm^2	F1 max. kN	Approx. weight kg/m
10157-104545X****	10	45x45	11	11	4,89	4,89	5,73	7	1,55

Aluminium profiles 45x90 light

Type B

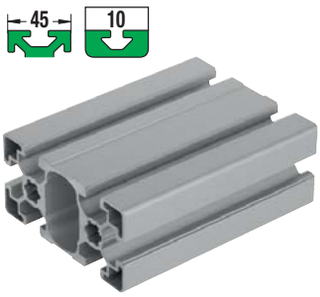

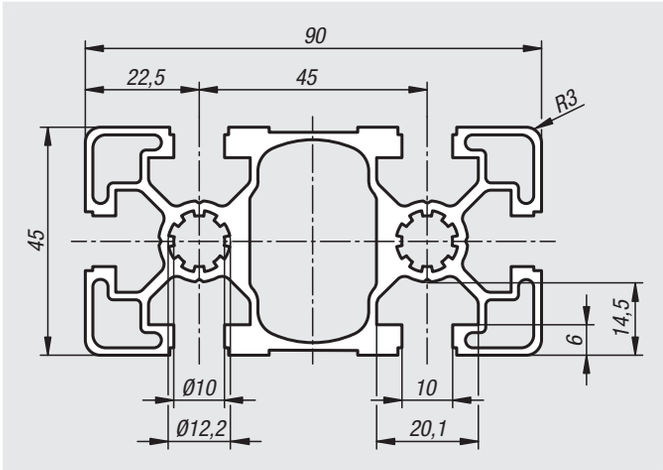

Material:
Aluminium EN AW-6063 T66 (AlMgSi 0.5 F25)

Version:
Artificially aged, natural colour anodized.

Sample order:
nlm 10157-104590X*
* Include length only in full mm increments.
Maximum available length 6000 mm.

Note:
Lightweight aluminium profile for weight-optimised constructions.

On request:
Mitre cuts 15°, 30° and 45°.

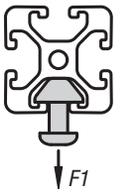

Order No.	Slot width	Profile	Ix cm^4	Iy cm^4	Wx cm^3	Wy cm^3	Profile area cm^2	F1 max. kN	Approx. weight kg/m
10157-104590X****	10	45x90	81,82	23,53	18,18	1,46	11,29	7	3,05

Aluminium profiles 90x90 light

Type B

Material:
Aluminium EN AW-6063 T66 (AlMgSi 0.5 F25)

Version:
Artificially aged, natural colour anodized.

Sample order:
nlm 10157-109090X*
* Include length only in full mm increments.
Maximum available length 6000 mm.

Note:
Lightweight aluminium profile for weight-optimised constructions.

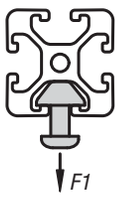

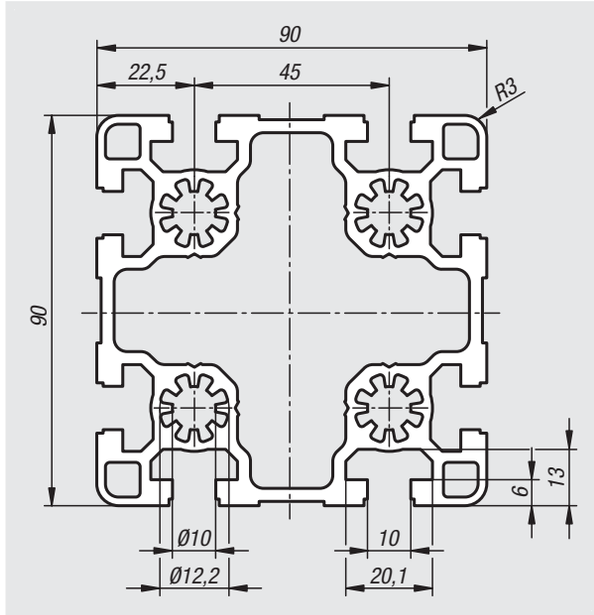

On request:
Mitre cuts 15°, 30° and 45°.

Order No.	Slot width	Profile	Ix cm^4	Iy cm^4	Wx cm^3	Wy cm^3	Profile area cm^2	F1 max. kN	Approx. weight kg/m
10157-109090X****	10	90x90	210,5	210,5	46,78	46,78	23,46	12	6,34

Notes

Aluminium profiles 45x45

Type B

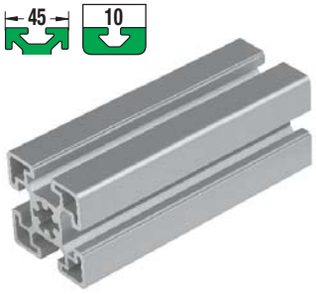

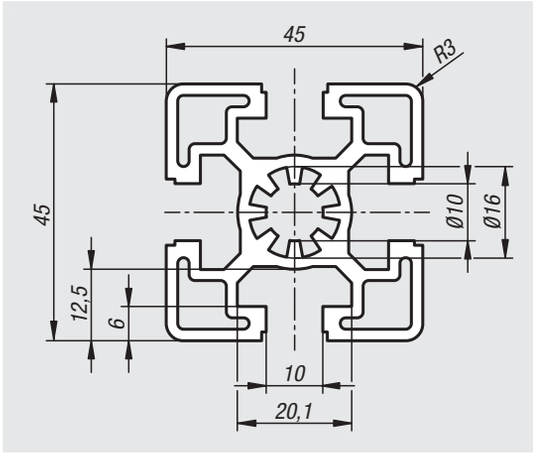

Material:
Aluminium EN AW-6063 T66 (AlMgSi 0.5 F25)

Version:
Artificially aged, natural colour anodized.

Sample order:
nlm 10160-104545X*
* Include length only in full mm increments.
Maximum available length 6000 mm.

Note:
Aluminium profile for general constructions.

On request:
Mitre cuts 15°, 30° and 45°.

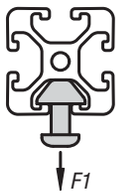

Order No.	Slot width	Profile	Ix cm^4	Iy cm^4	Wx cm^3	Wy cm^3	Profile area cm^2	F1 max. kN	Approx. weight kg/m
10160-104545X****	10	45x45	13,94	13,94	6,91	6,91	7,5	12	2,03

Aluminium profiles 45x60

Type B

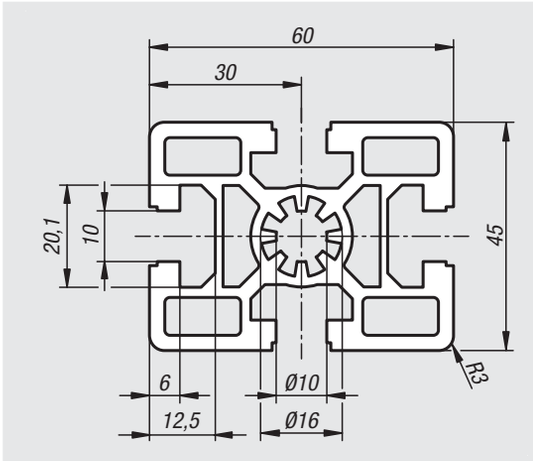

Material:
Aluminium EN AW-6063 T66 (AlMgSi 0.5 F25)

Version:
Artificially aged, natural colour anodized.

Sample order:
nlm 10160-104560X*
* Include length only in full mm increments.
Maximum available length 6000 mm.

Note:
Aluminium profile for general constructions.

On request:
Mitre cuts 15°, 30° and 45°.

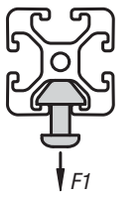

Order No.	Slot width	Profile	Ix cm^4	Iy cm^4	Wx cm^3	Wy cm^3	Profile area cm^2	F1 max. kN	Approx. weight kg/m
10160-104560X****	10	45x60	37,55	22,66	12,52	10,07	11,14	12	3,01

Aluminium profiles 45x90

Type B

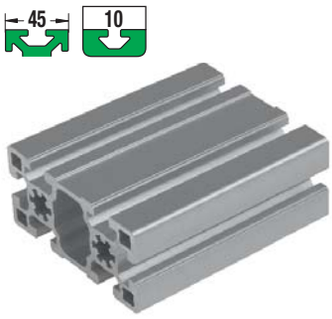

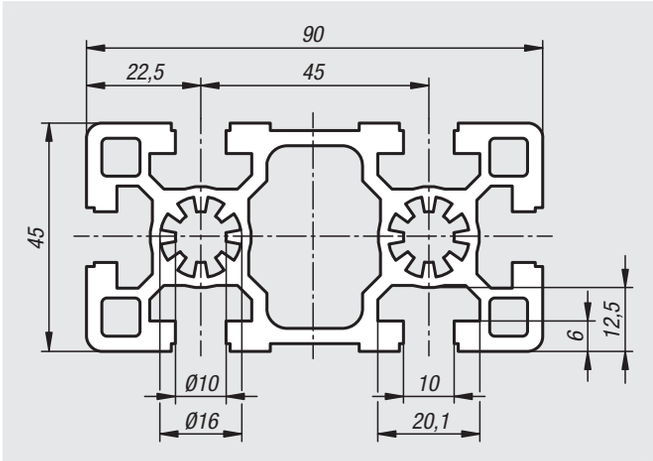

Material:
Aluminium EN AW-6063 T66 (AlMgSi 0.5 F25)

Version:
Artificially aged, natural colour anodized.

Sample order:
nlm 10160-104590X*
* Include length only in full mm increments.
Maximum available length 6000 mm.

Note:
Aluminium profile for general constructions.

On request:
Mitre cuts 15°, 30° and 45°.

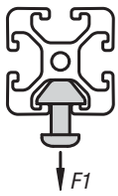

Order No.	Slot width	Profile	Ix cm⁴	Iy cm⁴	Wx cm³	Wy cm³	Profile area cm²	F1 max. kN	Approx. weight kg/m
10160-104590X****	10	45x90	124,05	32,25	27,57	14,33	15,24	12	4,12

Aluminium profiles 90x90

Type B

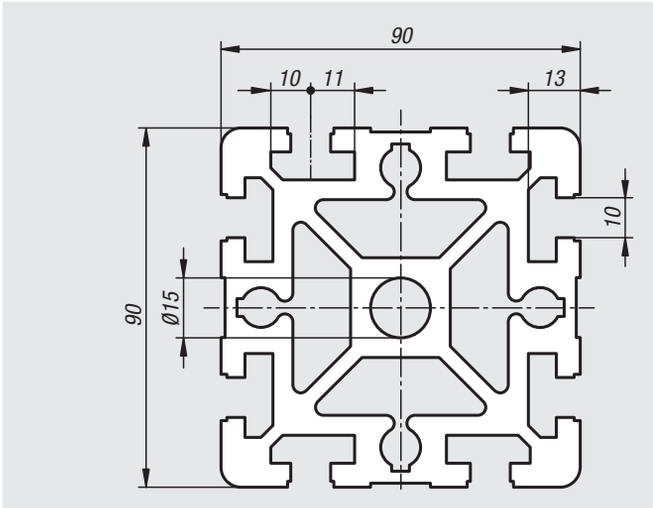

Material:
Aluminium EN AW-6063 T66 (AlMgSi 0.5 F25)

Version:
Artificially aged, natural colour anodized.

Sample order:
nlm 10160-109090X*
* Include length only in full mm increments.
Maximum available length 6000 mm.

Note:
Aluminium profile for general constructions.

On request:
Mitre cuts 15°, 30° and 45°.

Order No.	Slot width	Profile	Ix cm⁴	Iy cm⁴	Wx cm³	Wy cm³	Profile area cm²	F1 max. kN	Approx. weight kg/m
10160-109090X****	10	90x90	301,96	301,96	67,07	67,07	38,93	18	10,51

Connecting sets standard

Type I

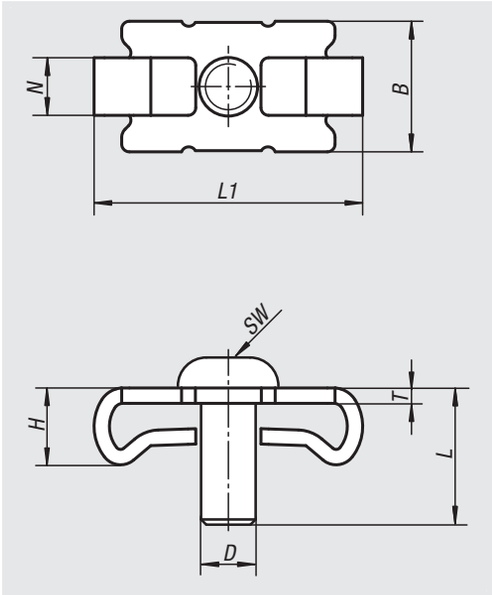

Material:
Steel.

Version:
galvanized.

Sample order:
nlm 10200-06

Note:
The connecting sets are used for connecting two aluminium profiles at right angles. The connection is non-rotating. For larger profiles several connecting sets can be mounted on the end for greater strength

Low workload. Cut a thread in the end face core hole. Drill a through hole for tightening the screw in the opposing profile.

1.

2.

3.

Order No.	Type	Slot width	D	B	H	L	L1	N	T	SW
10200-06	I	6	M6	13	7,3	14	27,5	6	2	4
10200-08	I	8	M8	17	9,5	20	35	8	2	5

Connecting sets universal

Type I

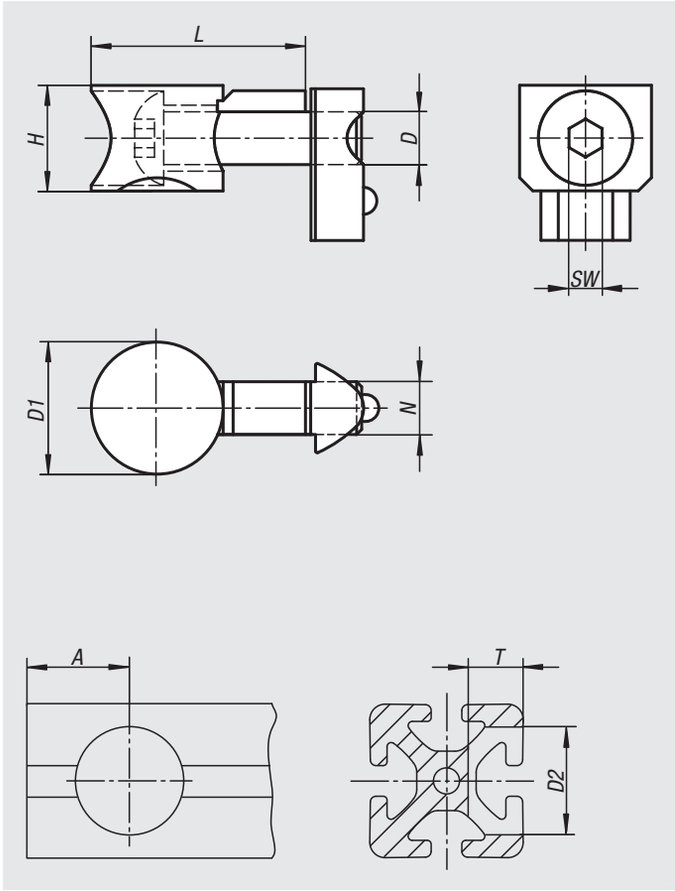

Material:
Connector die-cast zinc.
Screw and slot nuts steel.

Version:
galvanized.

Sample order:
nlm 10202-06

Note:
The connecting sets are used for connecting two aluminium profiles at right angles. They allow a free positioning of profiles. The connection is non-rotating (the rotation lock can be broken off). For larger profiles several connecting sets can be mounted on the end for greater strength. Retrofitting into existing constructions is possible.

Low workload. The connecting set requires only one hole drilled in one end.

Order No.	Type	Slot width	D	D1	H	L	N	SW	A	D2	T
10202-06	I	6	M6	16	12,5	25,2	6,2	4	15	16	12,7
10202-08	I	8	M8	20	16	33,5	8	5	20	20	16

Connecting sets central

Type I

Material:
Steel.

Version:
galvanized.

Sample order:
nlm 10204-0800

Note:
The connecting sets are used to connect two aluminium profiles at right angles. They allow free position of the profiles. The profile slots positioned at right-angles to each other remain free. Panel elements can be positioned in the profile grooves without additional machining.

Due to the reduced clamping force and ommited rotation locks, these connecting sets should only be used in combination with panel elements and lightly loaded constructions.

Low workload. To assemble a hole must be drilled into one of the profiles and the core hole must be drilled out.

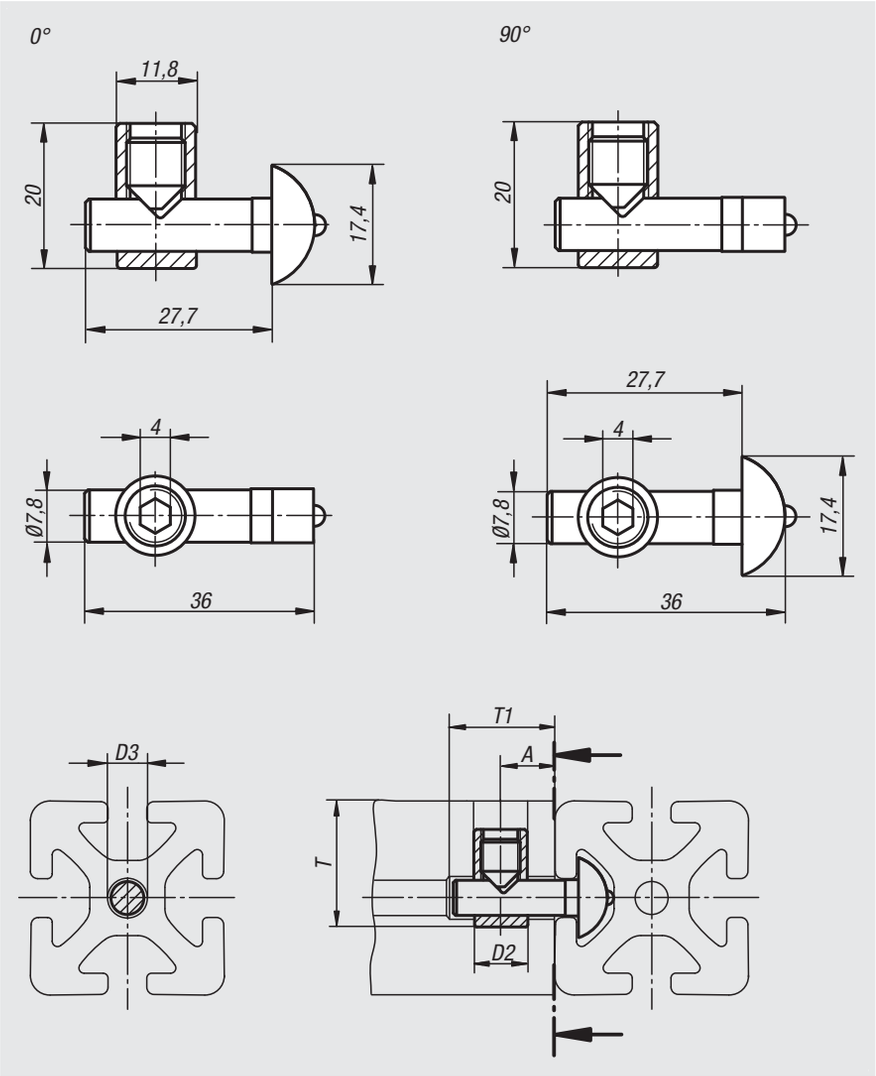

0°

90°

Order No.	Type	Slot width	Version	A	D2	D3	T	T1
10204-0800	I	8	0°	15	12	8	28	28
10204-0890	I	8	90°	15	12	8	28	28

Connecting sets central

Type B

Material:
Steel.

Version:
galvanized.

Sample order:
nlm 10205-1000

Note:
The connecting sets are used to connect two aluminium profiles at right angles. They allow free position of the profiles. The profile slots positioned at right-angles to each other remain free. Panel elements can be positioned in the profile slots without additional machining.

Due to the reduced clamping force and omitted rotation locks, these connecting sets should only be used in combination with panel elements and lightly loaded constructions.

Low workload. To assemble a hole must be drilled into one of the profiles. The D2 hole can also be drilled through.

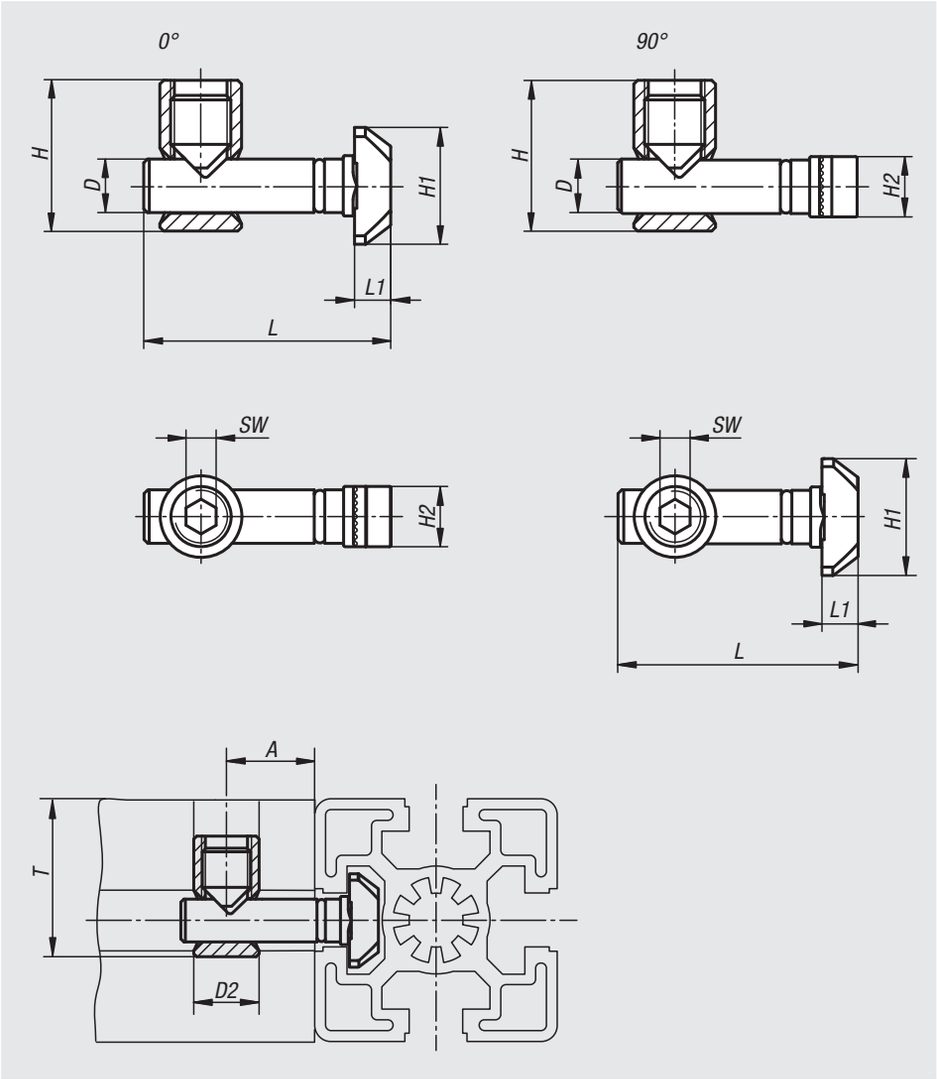

0°

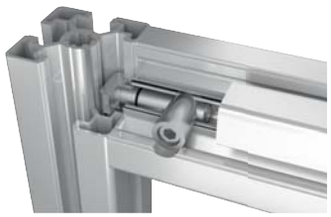

90°

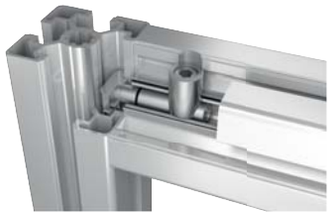

Order No.	Type	Slot width	Version	A	D	D2	H	H1	H2	L	L1	SW	T for profile 30	T for profile 40	T for profile 45	T for profile 50	T for profile 60
10205-0800	B	8	0°	18	7,1	11	20	15,5	8	33	4,8	4	22	-	-	-	-
10205-0890	B	8	90°	18	7,1	11	20	15,5	8	33	4,8	4	22	-	-	-	-
10205-1000	B	10	0°	22,5	9,7	17	28	19,5	10	45,5	5,5	6	-	31	34	36	41
10205-1090	B	10	90°	22,5	9,7	17	28	19,5	10	45,5	5,5	6	-	31	34	36	41

Connecting sets central

Type B

Material:
Steel.

Version:
galvanized.

Sample order:
nlm 10206-1000

Note:
The connecting sets are used to connect two aluminium profiles at right angles. They allow free position of the profiles. The profile slots positioned at right-angles to each other remain free. Panel elements can be positioned in the profile slots without additional machining.

Due to the reduced clamping force and omitted rotation locks, these connecting sets should only be used in combination with panel elements and lightly loaded constructions.

Low workload. To assemble a hole must be drilled into one of the profiles. Due to the reduced pin diameter the slot is not damaged and can be completely covered with a cover profile.

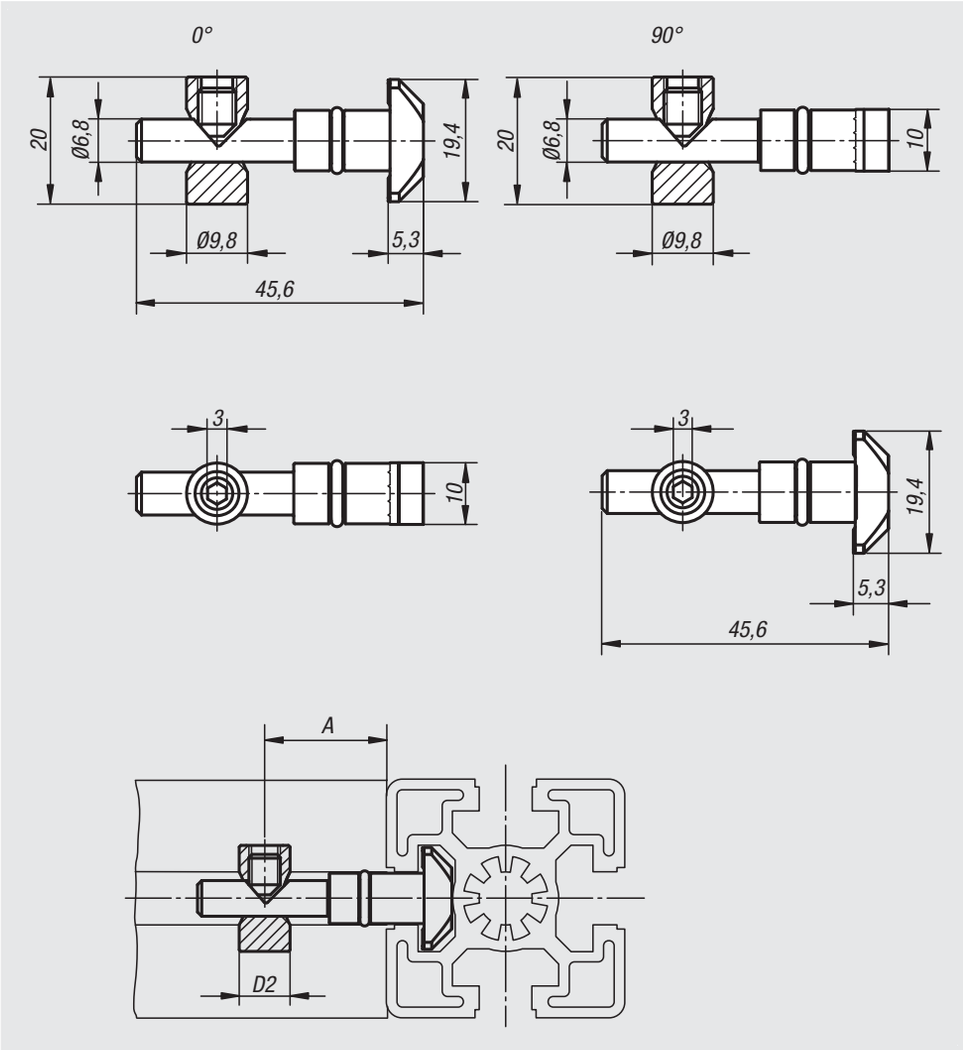

0°

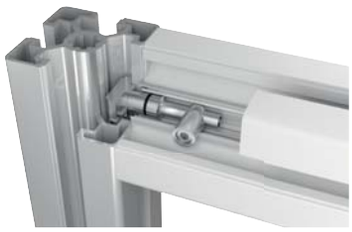

90°

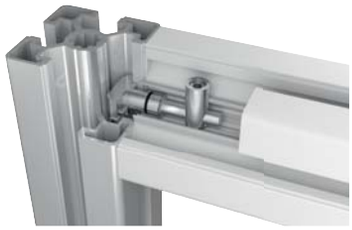

Order No.	Type	Slot width	Version	A	D2
10206-1000	B	10	0°	22,5	9,8
10206-1090	B	10	90°	22,5	9,8

Connecting sets automatic

Type I

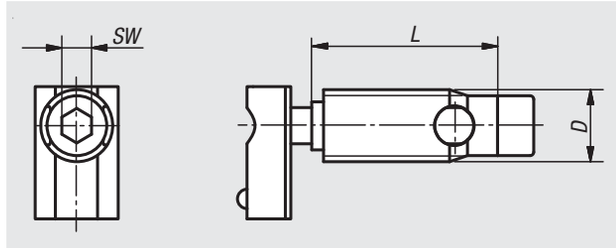

Material:
Steel.

Version:
galvanized.

Sample order:
nlm 10210-06

Note:
The connecting sets are used to connect two aluminium profiles at right angles. They allow free position of the profiles.

No profile machining is necessary. The connector is screwed into the profile slot from the front (left-hand thread). The connector has a self-tapping thread. The use of lubricants is recommended.

Connecting sets automatic should always be used opposite each other in pairs.

Order No.	Type	Slot width	D	L	SW
10210-06	I	6	10	27	4
10210-08	I	8	12	31	5

Connecting sets automatic

Type B

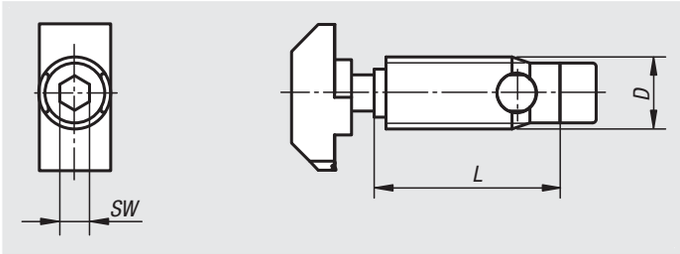

Material:
Steel.

Version:
galvanized.

Sample order:
nlm 10212-1012

Note:
The connecting sets are used to connect two aluminium profiles at right angles. They allow free position of the profiles.

No profile machining is necessary. The connector is screwed into the profile slot from the front (left-hand thread). The connector has a self-tapping thread. The use of lubricants is recommended.

Connecting sets automatic should always be used opposite each other in pairs.

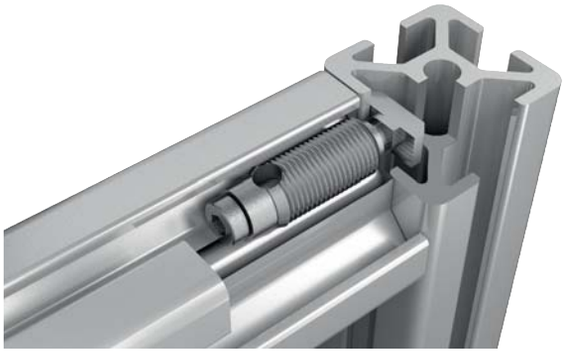

Order No.	Type	Slot width	D	L	SW
10212-0810	B	8	10,7	24	4
10212-1012	B	10	12	35	5
10212-1013	B	10 light	13	35	5

Pin connector sets

Type B

Material:
Pins, screws and T-nuts steel.
Locating pin und end caps polyamide, fibreglass reinforced.

Version:
Pins, screws and T-nuts galvanized.
Locating pin and end caps black.

Sample order:
nlm 10215-1040

Note:
The connecting sets are used to connect two aluminium profiles at right angles. They allow free position of the profiles. Suitable for high loads and torsional forces.

Low processing workload. The connecting set requires only one Ø17 mm hole drilled in one end for installation.
The connecting set 10215-0828 requires only one Ø11 mm hole drilled in one end for installation.

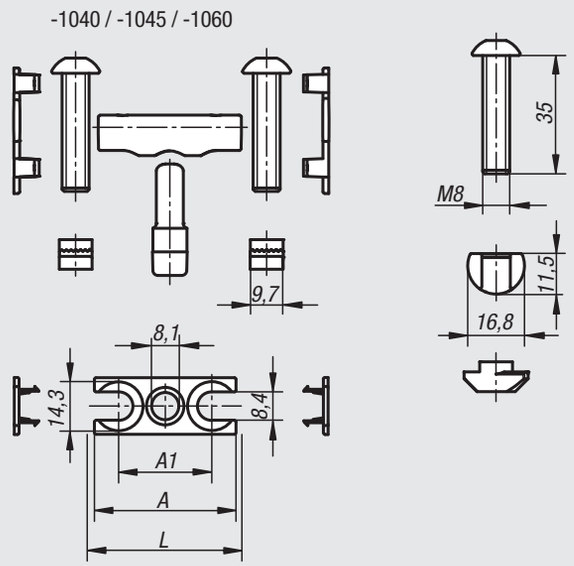

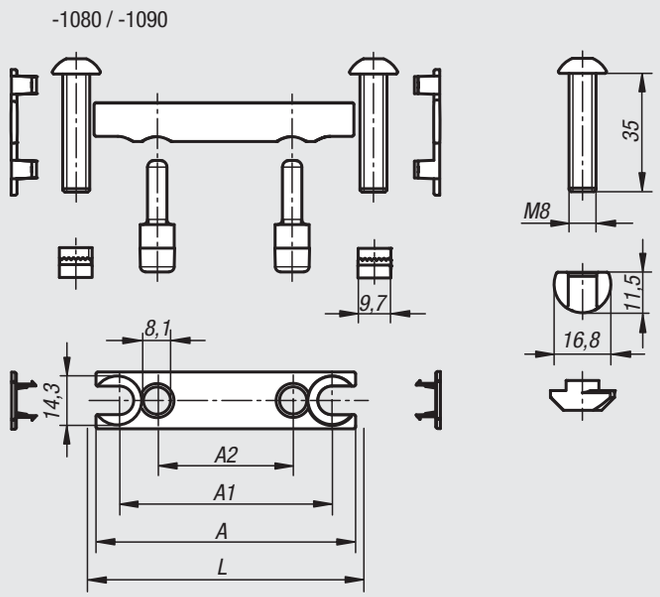

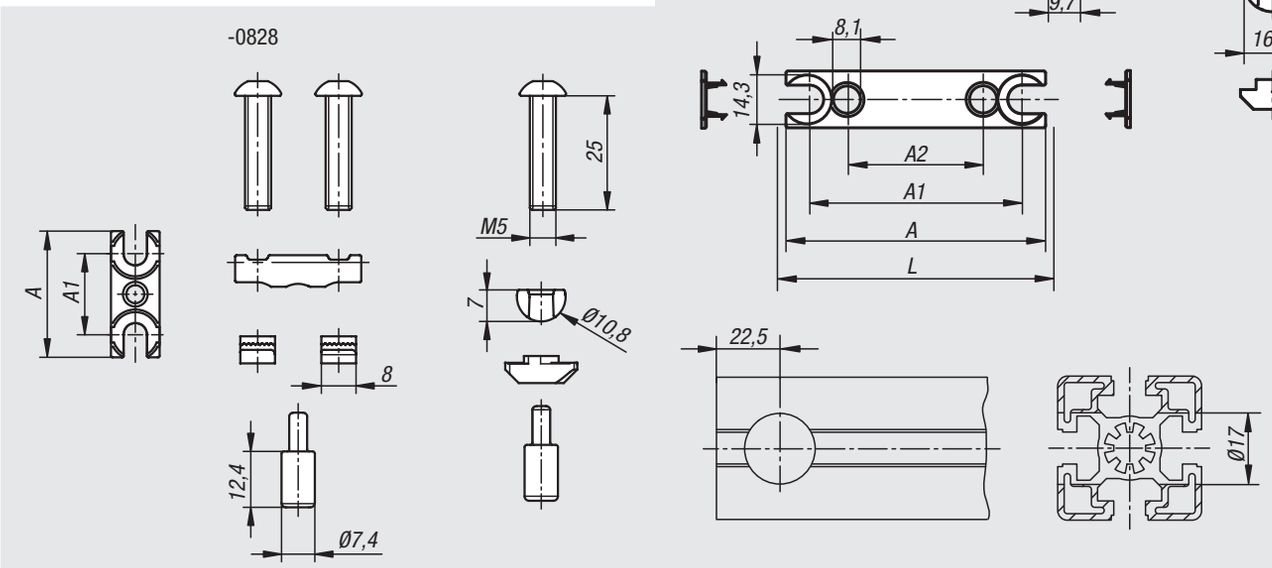

Order No.	Type	Slot width	A	A1	A2	L
10215-0828	B	8	28	18	-	-
10215-1040	B	10	37	23	-	40
10215-1045	B	10	42	28	-	45
10215-1060	B	10	57	43	-	60
10215-1080	B	10	77	63	40	80
10215-1090	B	10	87	73	45	90

Cube connector sets

Type B

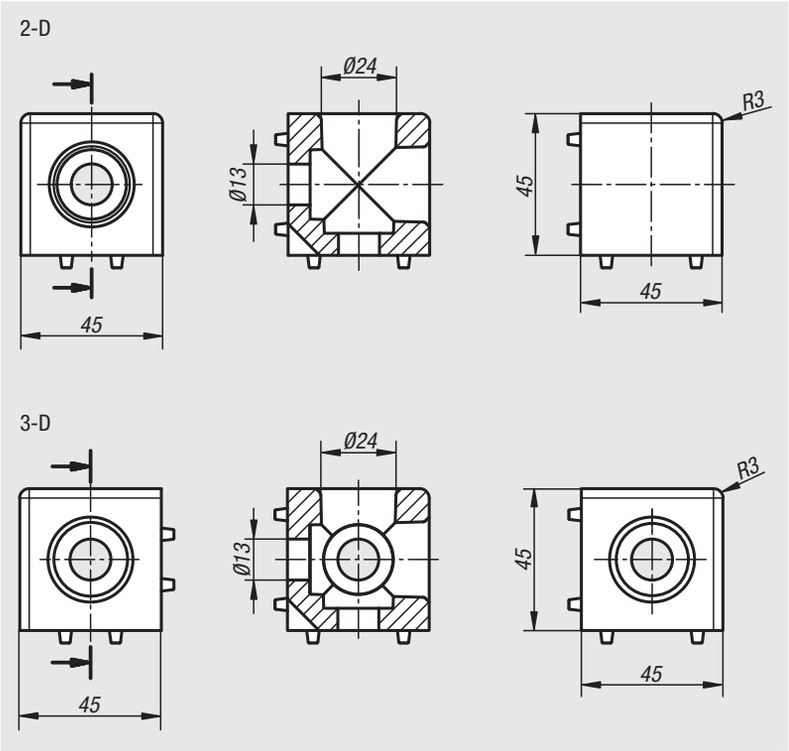

Material:
Cube die-cast aluminium.
Screws steel.
End caps polyamide.

Version:
Aluminium bright.
Screws with self-tapping thread.
End cap black.

Sample order:
nlm 10220-102

Note:
The cube connector can be used to connect two or three profiles to each other by the end faces. The cube connectors have guide lugs that ensure a perfect and secure installation. Fastening to the profile is carried out by self-tapping screws. The open holes can be closed off with the end caps.

The profile slots positioned at right-angles to each other remain free. Panel elements can be positioned in the profile slots without additional machining.

Order No.	Type	Slot width	Version
10220-102	B	10	2-D
10220-103	B	10	3-D

Central screws

Type B

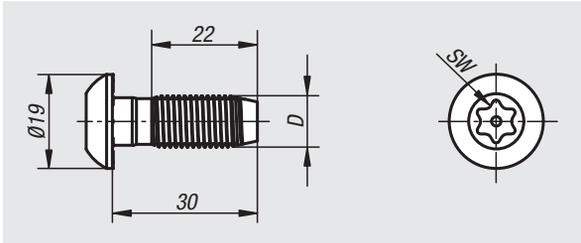

Material:
Steel.

Version:
galvanized.

Sample order:
nlm 10228-1012

Note:
Self-tapping screw for end face core hole. Ideal for fastenings without an angle or additional connectors not exposed to high loads.

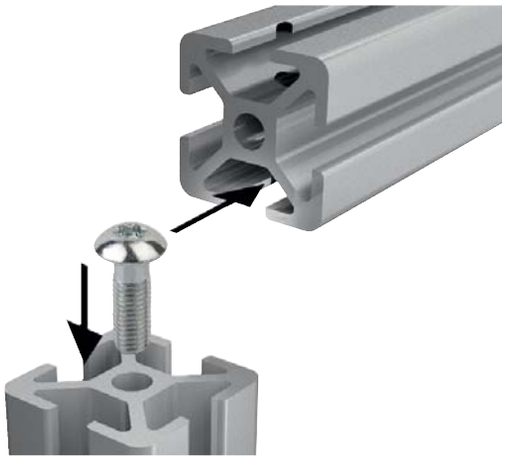

Order No.	Type	Slot width	D	SW
10228-1012	B	10	S12	T50

Butt connector sets automatic

Type I

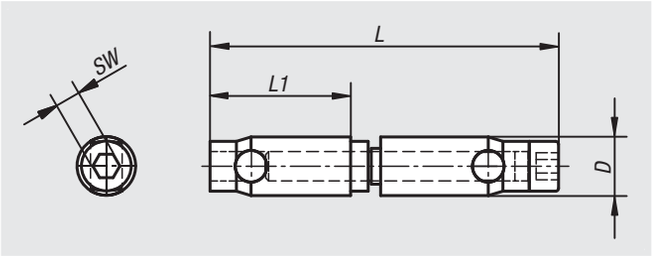

Material:
Steel.

Version:
galvanized.

Sample order:
nlm 10230-06

Note:
The connecting sets are used to connect two aluminum profiles of the same series from the front.

No machining of the profile is necessary. The connector is screwed into the profile slot from the front (connector with through hole left-hand thread. Connector with internal thread right-hand thread). The connector has a self-tapping thread. The use of lubricants is recommended.

Automatic connecting sets should always be used in pairs. More pairs are required for large profiles and loads.

Order No.	Type	Slot width	D	L	L1	SW
10230-06	I	6	10	60	24	4
10230-08	I	8	12	69	27	5

10240

Straps

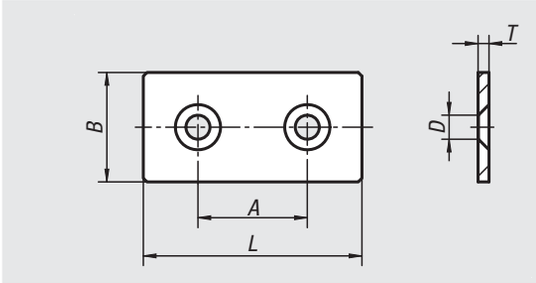

Material:
Steel.

Version:
black powder-coated.

Sample order:
nlm 10240-061

Note:
Universal fastening element for a rigid connection and linkage of profiles, panel elements or lightweight shelving.

Order No.	Type	Slot width	A	B	D for screw	L	T
10240-061	I	6	30	30	M6	60	3
10240-081	B & I	8/10	40	40	M8	80	5
10240-101	B	8/10	45	45	M8	90	5

10242

Angles

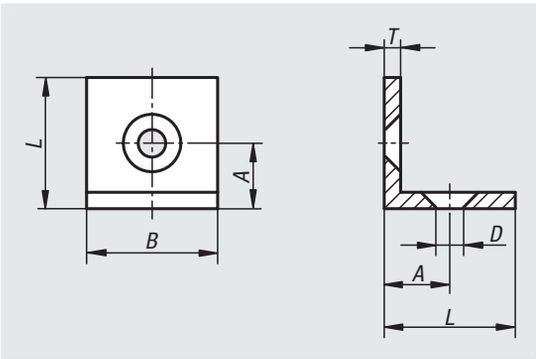

Material:
Steel.

Version:
black powder-coated.

Sample order:
nlm 10242-061

Note:
Universal fastening element for a rigid connection and linkage of profiles, panel elements or lightweight shelving.

Order No.	Type	Slot width	A	B	D for screw	L	T
10242-061	I	6	15	30	M6	30	3
10242-081	I	8/10	20	40	M8	40	5

Fastening sets

for straps und angles

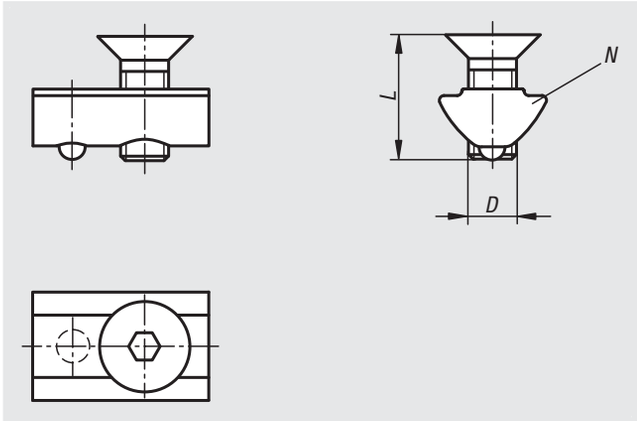

Material:
Steel.

Version:
galvanized.

Sample order:
nlm 10244-06

Note:
Consists of two DIN 7991 countersunk screws and two slot nuts.

Order No.	Type	Slot width	Version	D	L
10244-06	I	6	Slot key without step	M6	10
10244-08	I	8	Slot key with step	M8	14

Angle sets

Type I

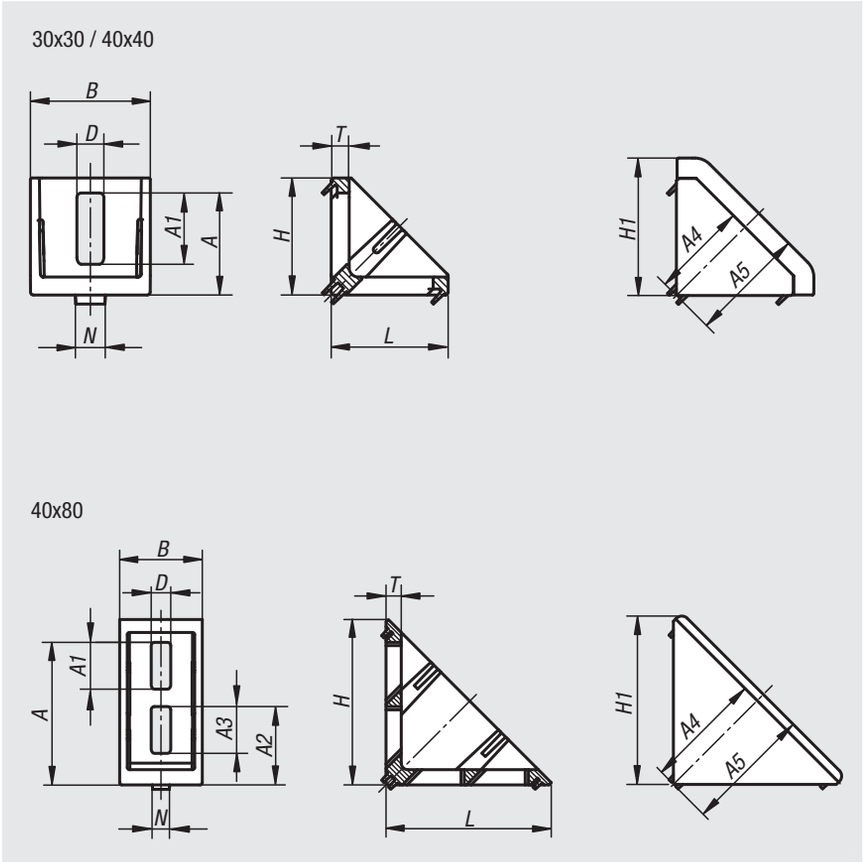

Material:
Angle die-cast zinc.
Screws and slot nuts steel.
End cap polyamide, fibreglass reinforced.

Version:
Angle painted aluminium tone.
Screws and slot nuts galvanized.
End cap black.

Sample order:
nlm 10250-063030

Note:
Suitable for reinforcing profile constructions and for frictional connection of profiles with each other without machining. Can also be used as fastening element (e.g. bracket) for any components.
The angles have centring lugs for accurate and twist-proof mounting. The centring lugs can be removed if necessary by breaking off i.e. for mounting plates. The open side can be closed off with the end cap.

Order No.	Type	Slot width	Version	A	A1	A2	A3	A4	A5	B	D	H	H1	L	N	T
10250-063030	I	6	30x30	22,5	11	-	-	23	27	28	6,5	28	32	28	6	4
10250-084040	I	8	40x40	34	24	-	-	32,5	39	40	9	39	46	39	8	6
10250-088080	I	8	40x80	65,5	21,5	36	21,5	54,5	58,5	38	9	76	78	76	8	7

Angle sets

Type B

Material:
Angle die-cast aluminium.

Screws and slot nuts steel.
End cap polyamide, fibreglass reinforced.

Version:
Angle bright.
Screws and slot nuts galvanized.
End cap black.

Sample order:
nlm 10252-104040

Note:
Suitable for reinforcing profile constructions and for frictional connection of profiles with each other without machining. Can also be used as fastening element (e.g. bracket) for any components.
The angles have centring lugs for accurate and twist-proof mounting.
The centring lugs can be removed if necessary by breaking off i.e. for mounting plates. The open side can be closed off with the end cap.

30x30 / 40x40 / 45x45

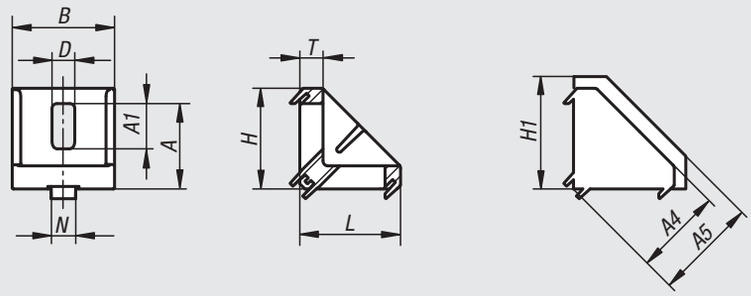

30x60 / 40x80 / 45x90

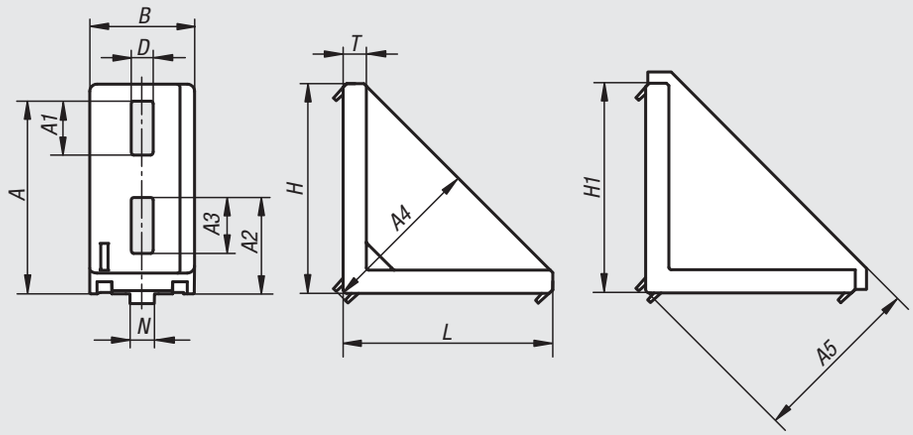

80x80 / 90x90

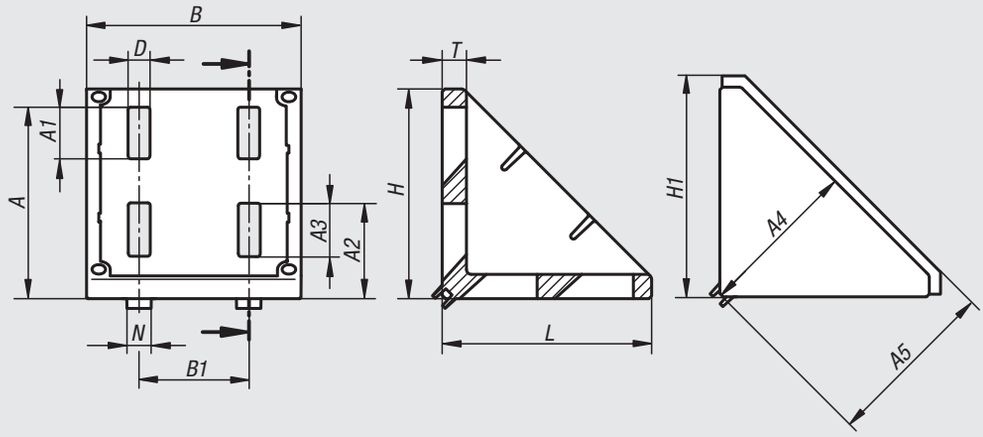

Order No.	Type	Slot width	Version	A	A1	A2	A3	A4	A5	B	B1	D	H	H1	L	N	T
10252-083030	B	8	30x30	22	9,5	-	-	23	29	28	-	6,4	27	30	27	8	6
10252-083060	B	8	30x60	51	11	23	11	44	49	28	-	6,4	57	61	57	8	5,5
10252-104040	B	10	40x40	29,5	20,5	-	-	29,5	36,5	38	-	9	36	41,5	36	10	5,5
10252-104545	B	10	45x45	35	18,5	-	-	35	44,5	42	-	9	41	50,5	41	10	9,5
10252-104080	B	10	40x80	68	20	35	23	59	64	38	-	9	76	80	76	10	8,5
10252-104590	B	10	45x90	79	22	39,5	23	67	72	43	-	9	86	90	86	10	9,5
10252-108080	B	10	80x80	68,5	20	35	20	58,5	65	74	40	9	76	82,5	76	10	8
10252-109090	B	10	90x90	78,5	21	39	22	67	75	88	45	9	86	94,5	86	10	10

Angle elements T1

Type I

Material:
Aluminium.

Version:
anodized.

Sample order:
nlm 10260-063030

Note:
Angle element for fastening a profile at a 45° angle and for making struts or ties.
The angle element can be fastened with a universal connector set (remove rotation lock) and with ISO 7380 round-head screws.

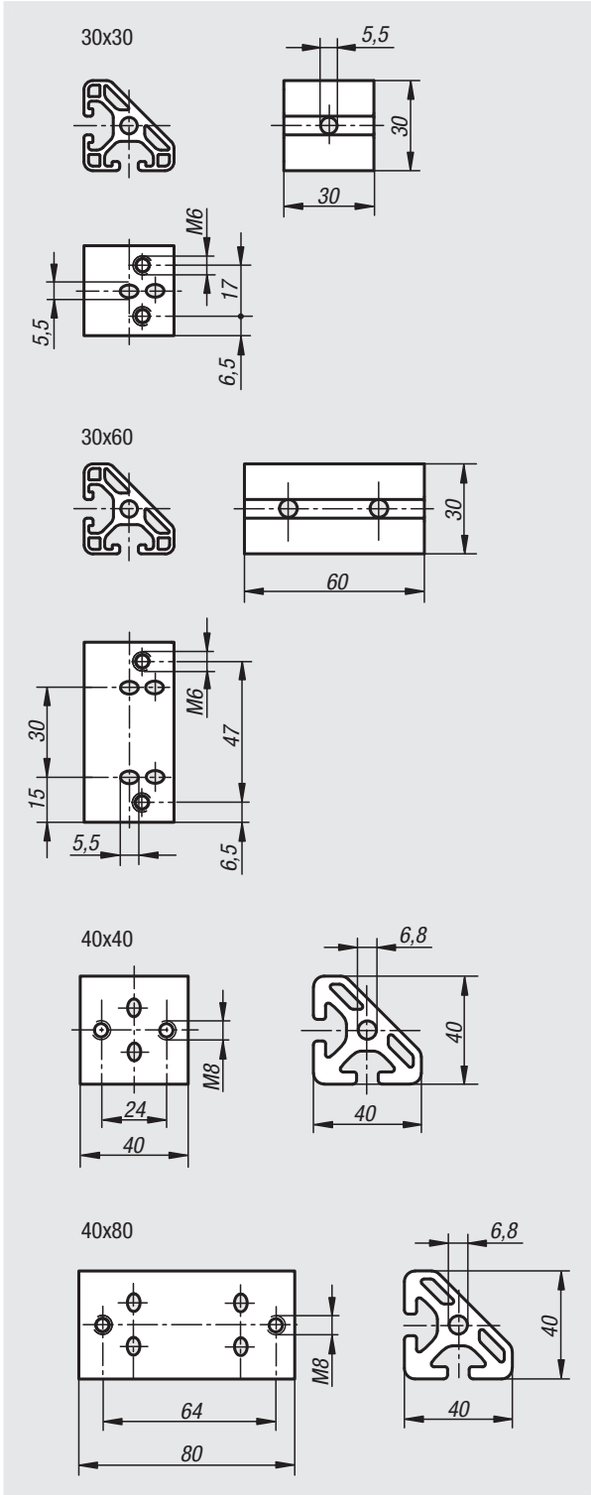

Order No.	Type	Slot width	Version
10260-063030	I	6	30x30
10260-063060	I	6	30x60
10260-084040	I	8	40x40
10260-084080	I	8	40x80

Angle elements T2

Type I

Material:
Aluminium.

Version:
anodized.

Sample order:
nlm 10261-063030

Note:
Angle element for fastening two profiles at a 45° angle and for making struts or ties.
The angle element can be fastened with universal connector sets and ISO 7380 round-head screws.

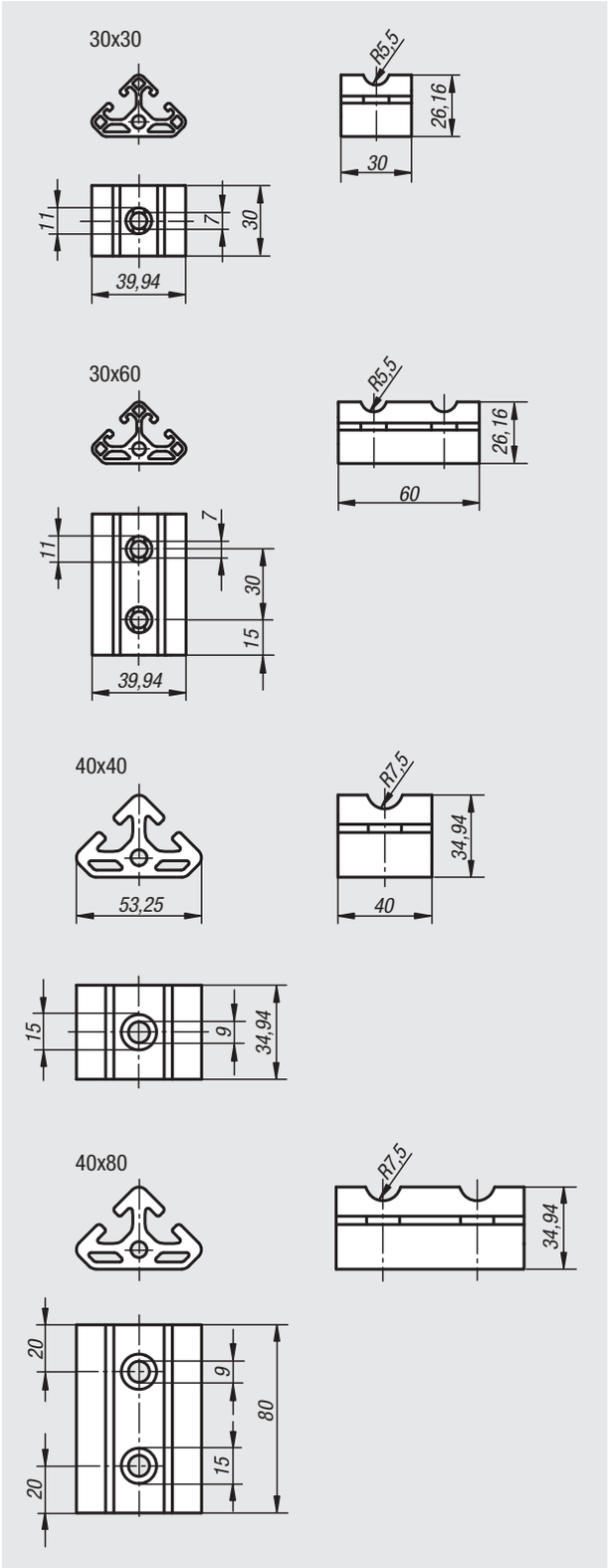

Order No.	Type	Slot width	Version
10261-063030	I	6	30x30
10261-063060	I	6	30x60
10261-084040	I	8	40x40
10261-084080	I	8	40x80

Clamping angles

Type I

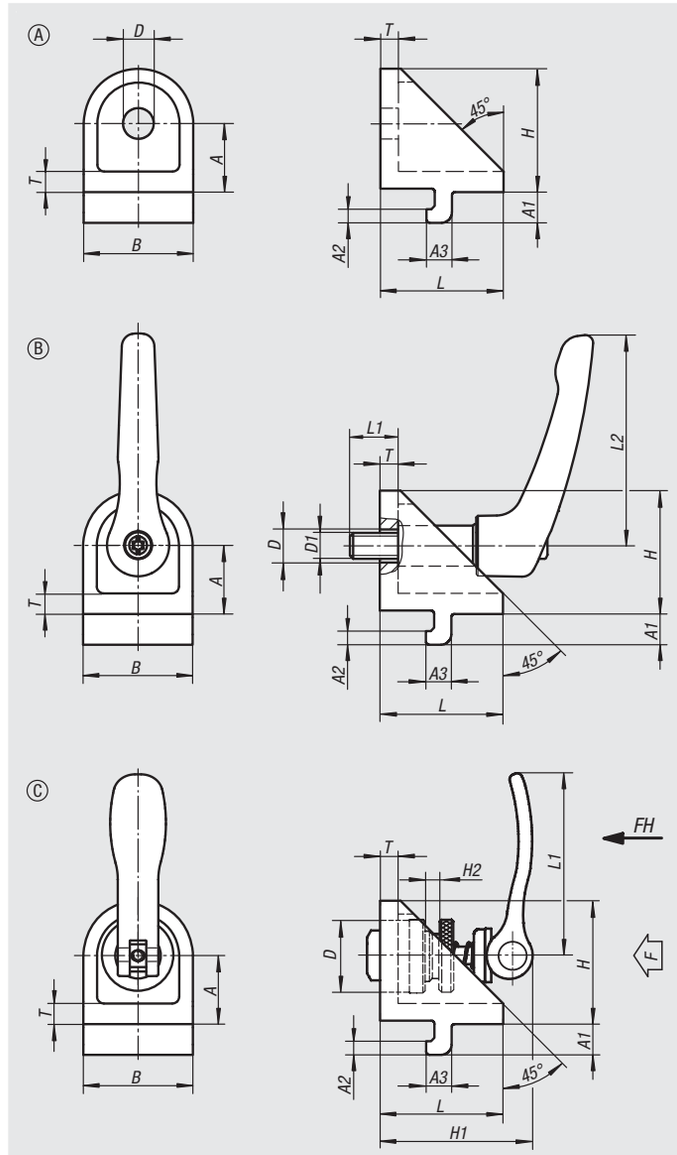

Material:
Clamping angle die-cast zinc.
Grip die-cast zinc DIN EN 12844. Steel parts stainless steel 1.4305.
Cam lever cast aluminium. Body steel.

Version:
Clamping angle painted aluminium tone.
Handle plastic-coated. Stainless steel bright.
Slot key galvanized.
Cam lever black powder-coated, steel parts black oxidised.

Sample order:
nlm 10265-06

Note:
The clamping angles are used for connecting two profiles of the same series that have contact on the side faces and cross at any angle.

Loosening the screw releases both clamps allowing free rotation and sliding along the slots.

The clamping angles are generally used in pairs or in combination with a joint angle.

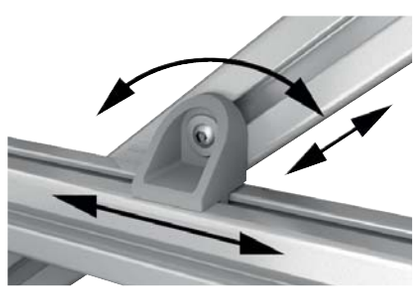

Order No.	Type	Slot width	Form	Version	A	A1	A2	A3	B	D	D1	H	L	L1	L2	T
10265-06	I	6	A	-	15	6,3	3	5,7	24	7	-	27	27	-	-	5
10265-08	I	8	A	-	20	9	4	7,5	32	9	-	36	36	-	-	6
10265-0606	I	6	B	with clamping lever	15	6,3	3	5,7	24	7	M6	27	27	13	40	5
10265-0808	I	8	B	with clamping lever	20	9	4	7,5	32	9	M8	36	36	18	65	6
10265-0615	I	6	C	with eccentric clamp	15	6,3	3	5,7	24	15	-	27	27	36,2	-	5
10265-0820	I	8	C	with eccentric clamp	20	9	4	7,5	32	20	-	36	36	52,3	-	6

Joint angles

Type I

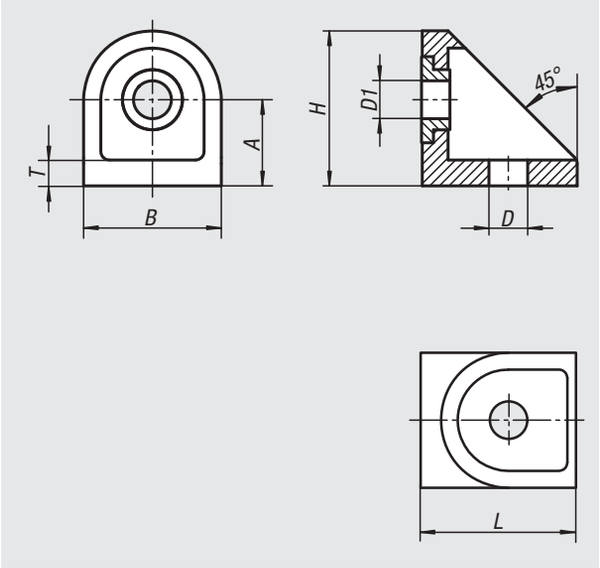

Material:
Joint angle die-cast zinc.
Pivot bush steel.

Version:
Joint angle painted aluminium tone.
Pivot bush galvanized.

Sample order:
nlm 10266-06

Note:
The joint angles are used for connecting two profiles of the same series that have contact on the side faces and cross at any angle.

The joint angle acts as a fixed pivot point for the crossed profiles. When the screw is tightened the profile can still be freely rotated around the pivot bush.

The joint angles are generally used in combination with a clamping angle.

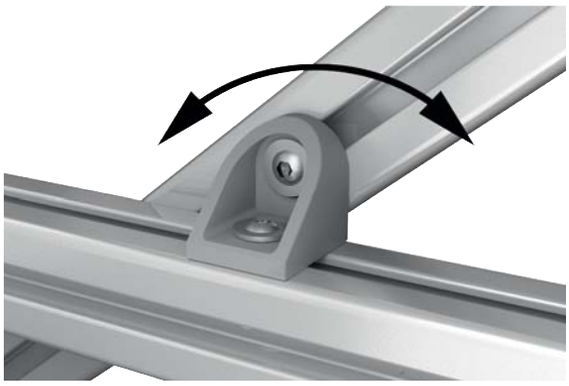

Order No.	Type	Slot width	A	B	D	D1	H	L	T
10266-06	I	6	15	24	7	6,5	27	27	5
10266-08	I	8	20	32	9	8,8	35,2	36	5,5

Notes

Joints

Type B and Type I

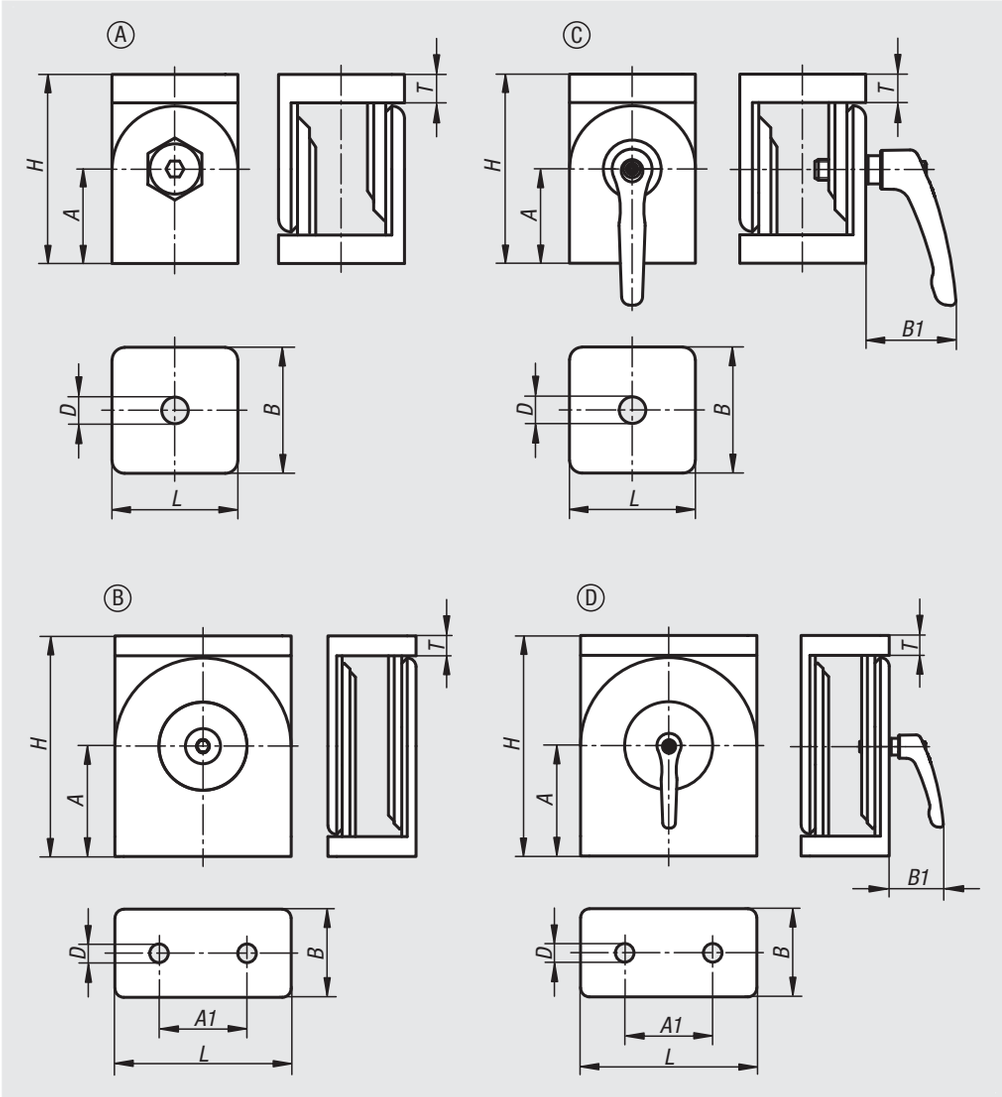

Material:
Joint die-cast zinc.
Fastenings die-cast zinc.
Spacer rings stainless steel.
Tapped bushes and countersunk screws steel.
Handle die-cast zinc DIN EN 12844. Metal parts stainless steel 1.4305.

Version:
Joint painted aluminium tone.
Fasteners galvanized.
Spacer rings bright.
Tapped bushes and countersunk screws galvanized.
Handle plastic-coated. Steel parts bright stainless steel.

Sample order:
nlm 10270-063030

Note:
Joints for connecting two profiles at any angle.
The adjustment range is 0° to 180°. The joint can also be used as a heavy hinge.

When the spacer rings are inserted, the joint can move freely. When these are removed, the joint can be used as a rigid angle element. The joints are particularly suitable for use as adjustable brackets, swivel arms or similar applications.

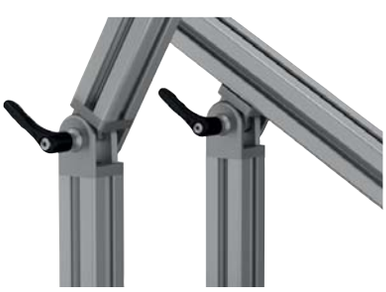

Joints

Type B and Type I

Joints without clamping levers

Order No.	Type	Slot width	Form	A	A1	B	D	H	L	T
10270-063030	I	6	A	22,5	-	30	6,4	45	30	7
10270-084040	I	8	A	30	-	40	8,4	60	40	9
10270-084080	I	8	B	50	40	40	8,4	100	80	9
10270-083030	B	8	A	22,5	-	30	8,3	45	30	7
10270-104545	B	10	A	30	-	45	8,5	60	45	8
10270-104590	B	10	B	50	45	45	8,5	100	90	9

Joints with clamping levers

Order No.	Type	Slot width	Form	A	A1	B	B1	D	H	L	T
10270-1063030	I	6	C	22,5	-	30	31	6,4	45	30	7
10270-1084040	I	8	C	30	-	40	31	8,4	60	40	9
10270-2084080	I	8	D	50	40	40	31	8,4	100	80	9
10270-1104545	B	10	C	30	-	45	42,5	8,5	60	45	8
10270-2104590	B	10	D	50	45	45	42,5	8,5	100	90	9

End caps

Type B and Type I

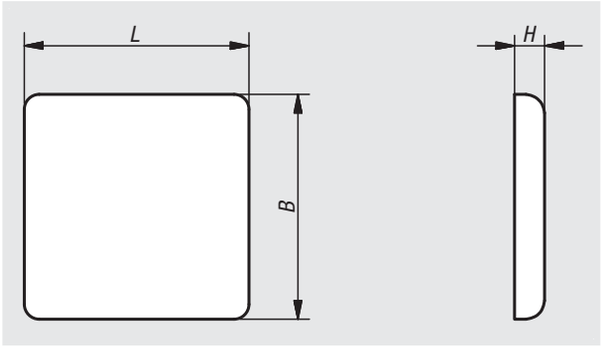

Material:
Polyamide fibreglass reinforced.

Version:
black.

Sample order:
nlm 10300-06303011

Note:
Round edged covers with rotation lock for covering the profile ends. Prevents dirt from penetrating and avoids injuries. Simple clip-on mounting.

Order No.	Type	Slot width	Profile	B	L	H
10300-06303011	I	6	30x30	30	30	3
10300-06306011	I	6	30x60	30	60	3
10300-06606011	I	6	60x60	60	60	3
10300-08164011	I	8	16x40	16	40	4
10300-08404011	I	8	40x40	40	40	4
10300-08408011	I	8	40x80	40	80	4
10300-08808011	I	8	80x80	80	80	4
10300-08303021	B	8	30x30	30	30	4
10300-08306021	B	8	30x60	30	60	4
10300-10404021	B	10	40x40	40	40	4
10300-10408021	B	10	40x80	40	80	4
10300-10454521	B	10	45x45	45	45	4
10300-10456021	B	10	45x60	45	60	4
10300-10459021	B	10	45x90	45	90	4
10300-10909021	B	10	90x90	90	90	4

Cover and adapter profiles

Type B and Type I

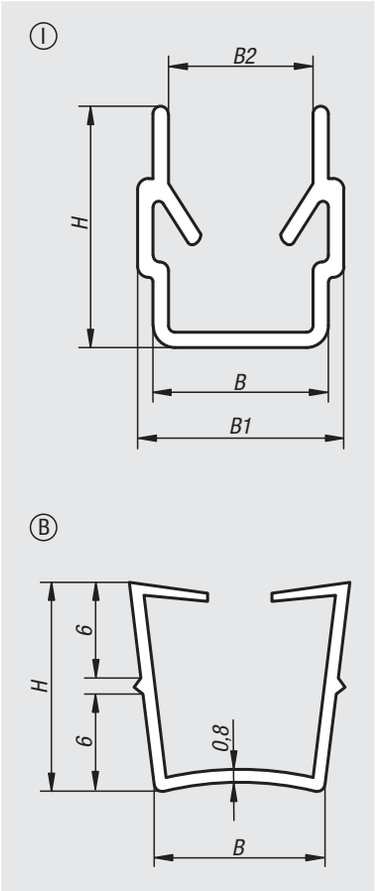

Material:
Type I polypropylene.
Type B polypropylene + TPE.

Version:
black or bright.

Sample order:
nlm 10315-06120351

Note:
The cover and adapter profile made of flexible plastic are used for two different applications. As a cover profile it seals the profile slots against dust and dirt. As an adapter profile with the open side facing out it is used to hold panel elements.

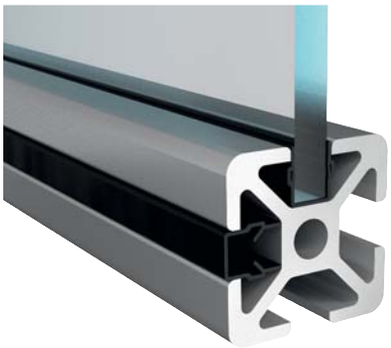

Order No.	Main colour	Type	Slot width	B	B1	B2	H	Length	Panel element
10315-06120351	black	I	6	6	7	4,4	9,1	2000	2,0 - 3,5
10315-06120350	natural	I	6	6	7	4,4	9,1	2000	2,0 - 3,5
10315-08120601	black	I	8	8	9,4	6,6	9,1	2000	2,0 - 6,0
10315-08140601	black	I	8	8	9,4	6,6	11	2000	4,0 - 6,0
10315-08140600	natural	I	8	8	9,4	6,6	11	2000	4,0 - 6,0
10315-10220601	black	B	10	10	-	-	13	2000	2,0 - 6,0

10320

Cover profiles

Type I

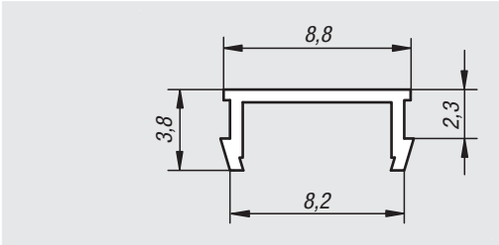

Material:
PVC.

Version:
black.

Sample order:
nlm 10320-0811

Note:
The cover profile made of flexible plastic is used as a cover for the profile slots to protect against dust and dirt.

Order No.	Type	Slot width	Length
10320-0811	I	8	2000

10330

Slide rails

Type I

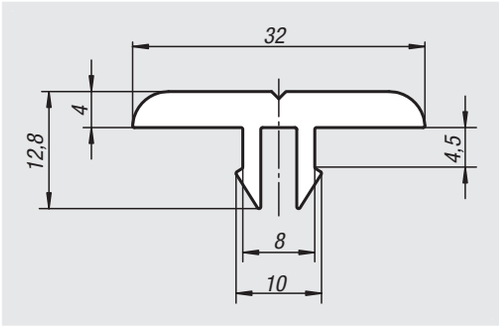

Material:
Polyethylene-HD.

Version:
black.

Sample order:
nlm 10330-081321

Note:
Low-wear slide rail with low slide friction for easy handling of goods. Slide rails can also be used as cover protection, impact protection and guide rails.

Order No.	Type	Slot width	Length
10330-081321	I	8	2000

Notes

Foot plates

Type B and Type I

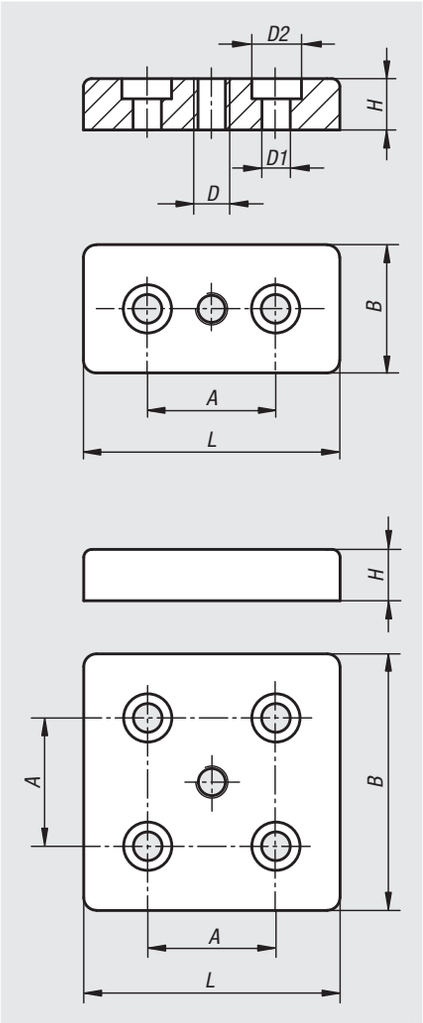

Material:
Die-cast zinc.

Version:
bright or black powder-coated.

Sample order:
nlm 10347-0630601081

Note:
Used to mount levelling feet, rollers, eye bolts and other elements. Can also be mounted to the side of a profile using slot nuts.

Order No.	Surface	Type	Slot width	Profile	B	L	H	A	D	D1	D2
10347-0840801080	bright	I	8	40x80	40	80	16	40	M8	9	15
10347-0840801100	bright	I	8	40x80	40	80	16	40	M10	9	15
10347-0840801120	bright	I	8	40x80	40	80	16	40	M12	9	15
10347-0840801160	bright	I	8	40x80	40	80	16	40	M16	9	15
10347-0880801080	bright	I	8	80x80	80	80	16	40	M8	9	15
10347-0880801100	bright	I	8	80x80	80	80	16	40	M10	9	15
10347-0880801120	bright	I	8	80x80	80	80	16	40	M12	9	15
10347-0880801160	bright	I	8	80x80	80	80	16	40	M16	9	15
10347-1040802080	bright	B	10	40x80	40	80	16	40	M8	14,5	20
10347-1040802100	bright	B	10	40x80	40	80	16	40	M10	14,5	20
10347-1040802120	bright	B	10	40x80	40	80	16	40	M12	14,5	20
10347-1040802160	bright	B	10	40x80	40	80	16	40	M16	14,5	20
10347-1045902100	bright	B	10	45x90	45	90	16	45	M10	14,5	20
10347-1045902120	bright	B	10	45x90	45	90	16	45	M12	14,5	20
10347-1045902140	bright	B	10	45x90	45	90	16	45	M14	14,5	20
10347-1045902160	bright	B	10	45x90	45	90	16	45	M16	14,5	20
10347-1045902200	bright	B	10	45x90	45	90	16	45	M20	14,5	20
10347-1090902100	bright	B	10	90x90	90	90	16	45	M10	14,5	20
10347-1090902120	bright	B	10	90x90	90	90	16	45	M12	14,5	20
10347-1090902140	bright	B	10	90x90	90	90	16	45	M14	14,5	20
10347-1090902160	bright	B	10	90x90	90	90	16	45	M16	14,5	20
10347-1090902200	bright	B	10	90x90	90	90	16	45	M20	14,5	20

Foot plates

Type B and Type I

Order No.	Surface	Type	Slot width	Profile	B	L	H	A	D	D1	D2
10347-0630601081	black powder-coated	I	6	30x60	30	60	12	30	M8	6,6	11
10347-0630601101	black powder-coated	I	6	30x60	30	60	12	30	M10	6,6	11
10347-0630601121	black powder-coated	I	6	30x60	30	60	12	30	M12	6,6	11
10347-0630601161	black powder-coated	I	6	30x60	30	60	12	30	M16	6,6	11
10347-0660601081	black powder-coated	I	6	60x60	60	60	12	30	M8	6,6	11
10347-0660601101	black powder-coated	I	6	60x60	60	60	12	30	M10	6,6	11
10347-0660601121	black powder-coated	I	6	60x60	60	60	12	30	M12	6,6	11
10347-0660601161	black powder-coated	I	8	60x60	60	60	16	40	M16	9	15
10347-0840801081	black powder-coated	I	8	40x80	40	80	16	40	M8	9	15
10347-0840801101	black powder-coated	I	8	40x80	40	80	16	40	M10	9	15
10347-0840801121	black powder-coated	I	8	40x80	40	80	16	40	M12	9	15
10347-0840801161	black powder-coated	I	8	40x80	40	80	16	40	M16	9	15
10347-0880801081	black powder-coated	I	8	80x80	80	80	16	40	M8	9	15
10347-0880801101	black powder-coated	I	8	80x80	80	80	16	40	M10	9	15
10347-0880801121	black powder-coated	I	8	80x80	80	80	16	40	M12	9	15
10347-0880801161	black powder-coated	I	8	80x80	80	80	16	40	M16	9	15
10347-0830602081	black powder-coated	B	8	30x60	30	60	12	30	M8	9	15
10347-0830602101	black powder-coated	B	8	30x60	30	60	12	30	M10	9	15
10347-0830602121	black powder-coated	B	8	30x60	30	60	12	30	M12	9	15
10347-1045902101	black powder-coated	B	10	45x90	45	90	16	45	M10	14,5	20
10347-1045902121	black powder-coated	B	10	45x90	45	90	16	45	M12	14,5	20
10347-1045902141	black powder-coated	B	10	45x90	45	90	16	45	M14	14,5	20
10347-1045902161	black powder-coated	B	10	45x90	45	90	16	45	M16	14,5	20
10347-1045902201	black powder-coated	B	10	45x90	45	90	16	45	M20	14,5	20
10347-1090902101	black powder-coated	B	10	90x90	90	90	16	45	M10	14,5	20
10347-1090902121	black powder-coated	B	10	90x90	90	90	16	45	M12	14,5	20
10347-1090902141	black powder-coated	B	10	90x90	90	90	16	45	M14	14,5	20
10347-1090902161	black powder-coated	B	10	90x90	90	90	16	45	M16	14,5	20
10347-1090902201	black powder-coated	B	10	90x90	90	90	16	45	M20	14,5	20

Bearing flange

for feed roller

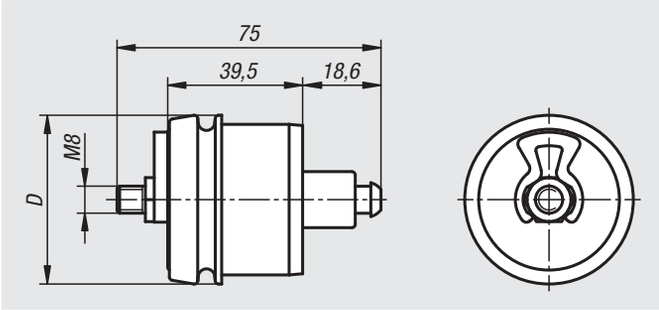

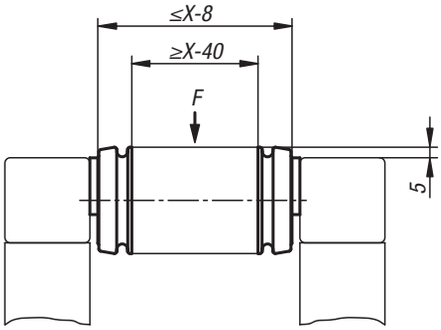

Material:
Bearing flanges and fastening pieces PA-GF.
Bolts steel.

Version:
Black.
Bolts galvanised.

Sample order:
nlm 10400-5008

Note:
Two bearing flanges combined with a D50 type I aluminium profile tube (10050) form a feed roller (load-bearing roller). The bearing flanges are simply pressed into the aluminium profile tube. These can be used for many conveyance tasks.
The bearing flanges have ball bearings and spring-loaded fastening spigots which enable transport rollers to be retrofitted into existing structures.
A roller conveyor is created when several transport rollers are mounted in series.

Two bearing flanges are required for a transport roller.

Accessories:
Aluminium profiles D50 10050
Slot key profile 07076

Order No.	Type	Slot width	D	F max. N	X min.	X max.
10400-5008	I	8	50	1000	160	800

Roller elements

Material:
Housing glass-bead reinforced polyamide.
Rollers POM.
Screws steel.

Version:
Housing and rollers black.
Screws galvanized.

Sample order:
nlm 10450-1000

Note:
The roller elements are ideal for constructing roller conveyors in any length and width. Suitable for aluminium profiles types B and I. The sprung guide tabs underneath universally match slots sized 8 and 10.

Mounting Form A
Insert the lower housing part with rollers into the aluminium profile slot. Set the spread pins on the upper housing part into the lower housing part and press down. The spread pins expand the clamps and locks the roller element in the slot.

Mounting Form B
Insert the lower housing part with rollers into the aluminium profile slot. Set the upper housing part on top and press down. Knocking or screwing the screws in locks and clamps the roller element in the slot.
Alternatively, the clamps under the lower housing part can be broken off and the roller element can be securely screwed to the aluminium profile using screws and slot keys.

Drawing reference:
1) lateral guide

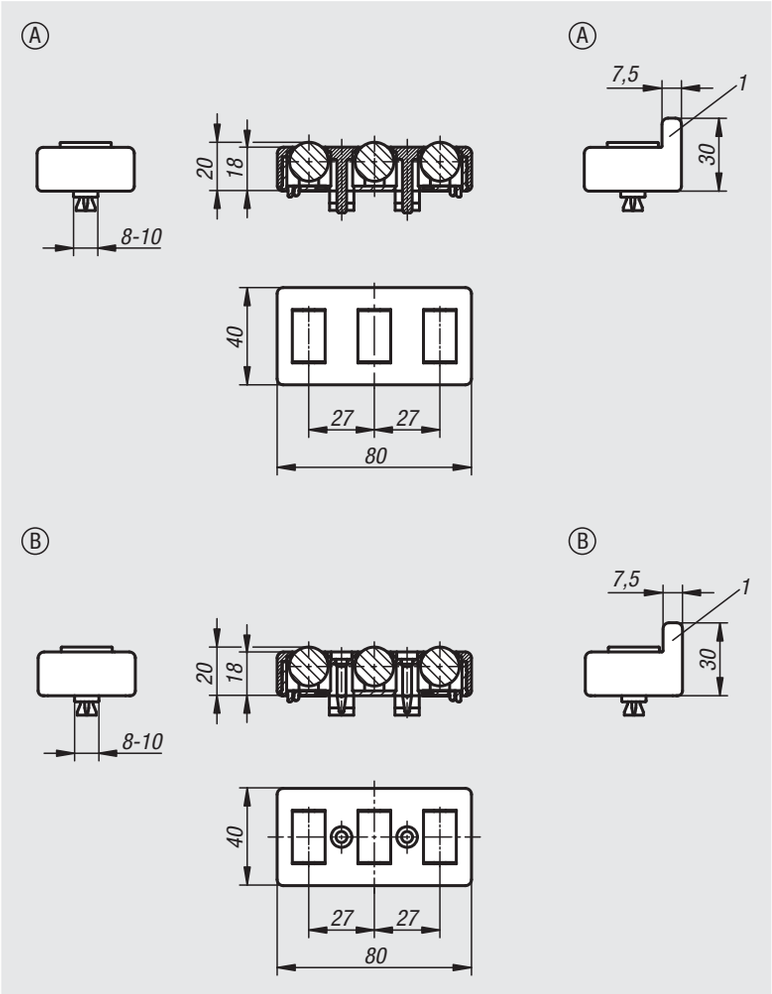

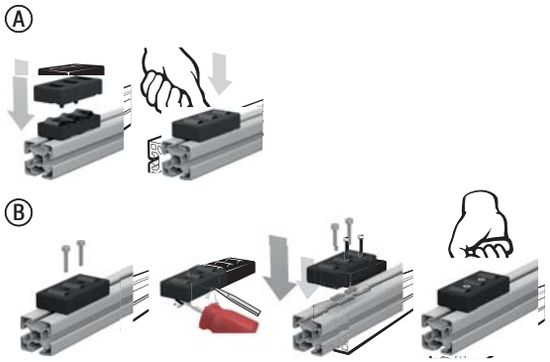

Order No.	Form	Version	Slot width	Load capacity N
10450-1000	A	without lateral guide	8/10	100
10450-1100	A	with lateral guide	8/10	100
10450-2000	B	without lateral guide	8/10	100
10450-2100	B	with lateral guide	8/10	100

10451

Cable tie block

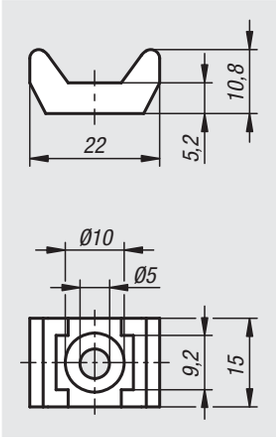

Material:
Polyamide fibreglass reinforced.

Version:
black.

Sample order:
nlm 10451-01

Note:
The cable tie block is a fastening component for cables and hoses. Can be mounted on panel elements or aluminium profiles (5 to 12 mm slots) with a cap screw or pan head screw and a slot key.

The cables and hoses are held in place using cable ties.

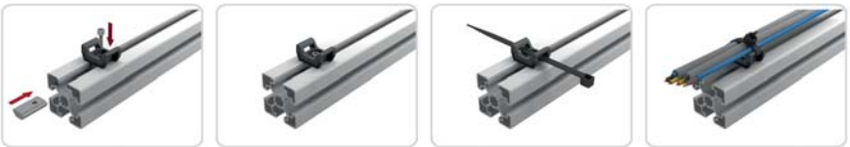

Order No.	Slot width
10451-01	5-12

10453

Cable clips

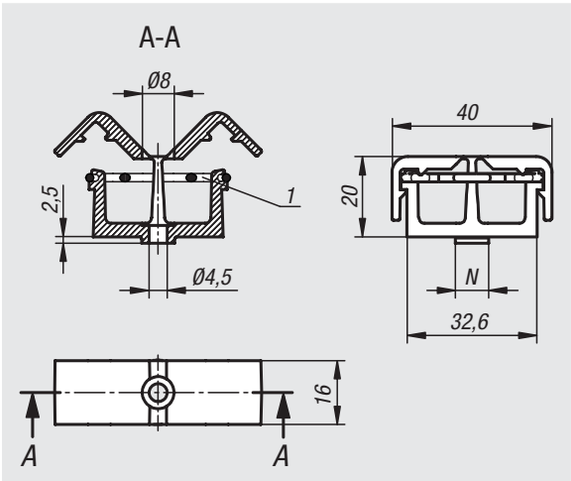

Material:
Polyamide.
O-ring FPM 70.

Version:
black.

Sample order:
nlm 10453-00

Note:
The cable clip is a fastening component for cables and hoses with a diameter of up to 12 mm.

Can be mounted on panel elements or aluminium profiles (8 or 10 mm slots) with a cap screw or pan head screw and a slot key. The cables are held in place by the stretched O-ring.

With two separate channels.

Drawing reference:
1) O-ring

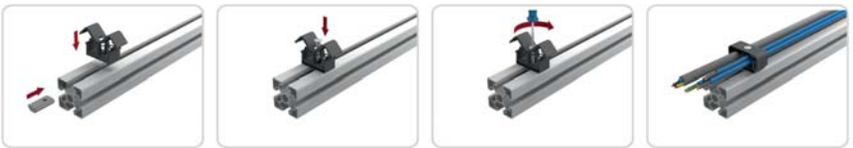

Order No.	Slot width	N
10453-00	-	-
10453-08	8	8
10453-10	10	10

Cable clips with T-slot key

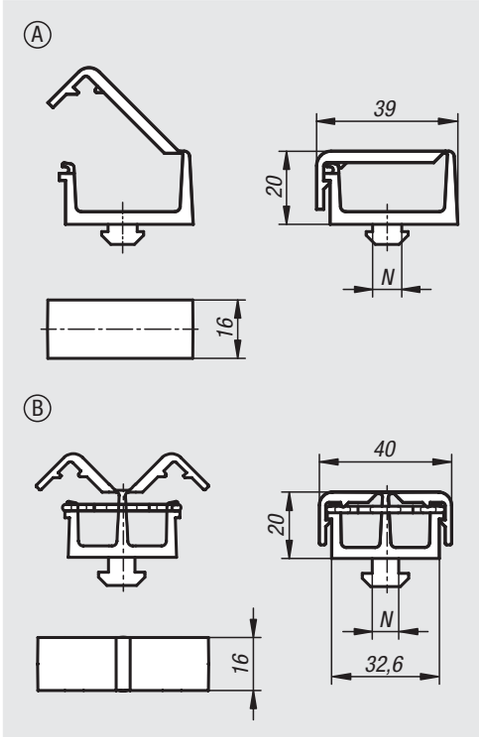

Material:
Polyamide.
O-ring FPM 70.

Version:
black.

Sample order:
nlm 10454-1108

Note:
The cable clip is a fastening component for cables and hoses with a diameter up to 12 mm.

The clip is mounted by inserting the T-key into a T-slot and twisting through 90°. The cables are held in place by the stretched O-ring.

Form A: with one channel.
Form B: with two separate channels.

Order No. Form A	Order No. Form B	Type	Slot width	N
10454-1108	**10454-2108**	I	8	8
10454-1208	**10454-2208**	B	8	8
10454-1210	**10454-2210**	B	10	10

Sensor holders

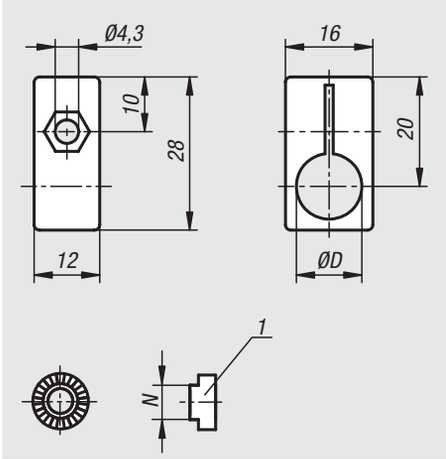

Material:
Polyamide fibreglass reinforced.

Version:
black.

Sample order:
nlm 10460-080

Note:
For fastening sensors and limit switches to aluminium profiles or panel elements.

Fastening pieces are available for various aluminium profile slot sizes. The fastening piece provides a positive rotation lock and can be adjusted in 15 increments. With no fastening piece the sensor holder can be infinitely adjusted in the angle.

Drawing reference:
1) Fastening piece

Order No.	Description	D	N
10460-080	sensor bracket	8	-
10460-120	sensor bracket	12	-
10460-905	locking piece	-	5
10460-906	locking piece	-	6
10460-908	locking piece	-	8
10460-910	locking piece	-	10

Earthing terminal

type I

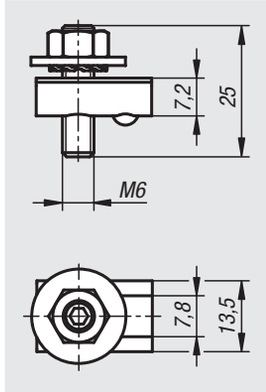

Material:
Slot key, grub screw and serrated washer, steel.
Nut and washer, brass.

Version:
Slot key, grub screw and serrated washer, galvanised.

Sample order:
nlm 10470-0806

Note:
For protecting installations and persons. Connectors for earthing aluminium profile structures and interconnecting the aluminium profiles by integrating them into the protective earth (PE) system. Conductive contact is established through defined destruction of the oxide layer in the slot base and on the slot flanks.

The cable lug must be positioned between the serrated washer and the washer during assembly.

Order No.	Type	Slot width
10470-0806	I	8

Potential equaliser

type I

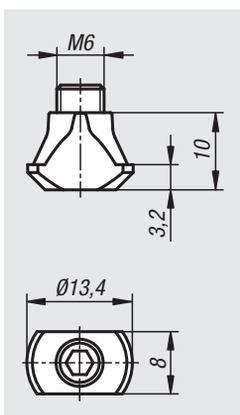

Material:
Steel.

Version:
galvanized.

Sample order:
nlm 10471-0806

Note:
For generating electrostatic discharge (ESD). For safely equalising electrostatic charge of profiles. It is swivelled into the slot and screwed against the profiles at a 45° angle. A conductive connection is established by breaking through the oxide layer.

Attention:
A potential equaliser is not an electrical connection of the protective earth (PE) system.

Order No.	Type	Slot width
10471-0806	I	8

Eccentric clamp modules

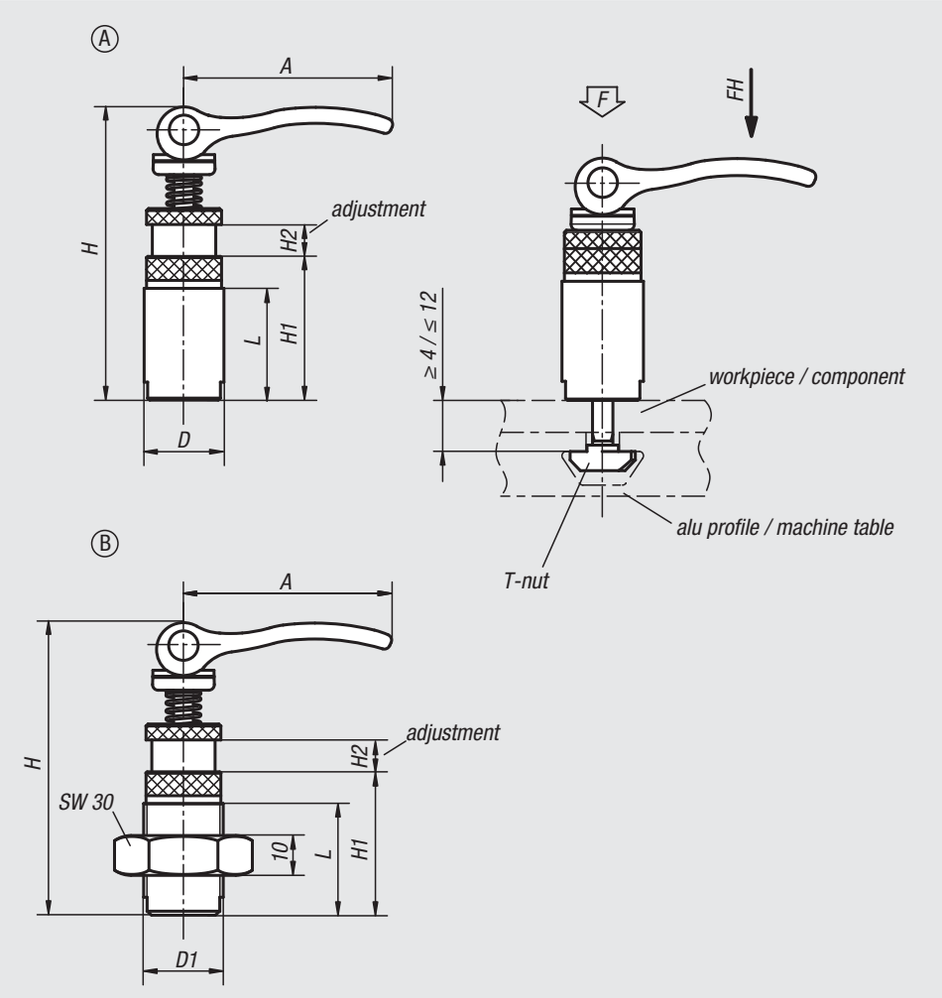

Material:
Body steel.
Cam levers cast aluminium.

Version:
Body black oxidised.
T-nut galvanized.
Cam levers black powder coated.

Sample order:
nlm 10500-00200808

Note:
The clamp module is inserted into the T-slot from above and secured using the cam lever, no other tools required.

Advantages:
The eccentric clamp modules can be used on conventional aluminium profile systems or on T-slot tables as stops, fasteners or clamps for components and workpieces.

Order No.	Form	D	D1	A	H	H1	H2	L	suitable for slot width	Clamping force F (kN)	Hand force FH N
10500-00200808	A	20	-	52,3	73,5	36	8	28	8	2,5	100
10500-10200808	B	-	M20x1,5	52,3	73,5	36	8	28	8	2,5	100

Eccentric clamp modules

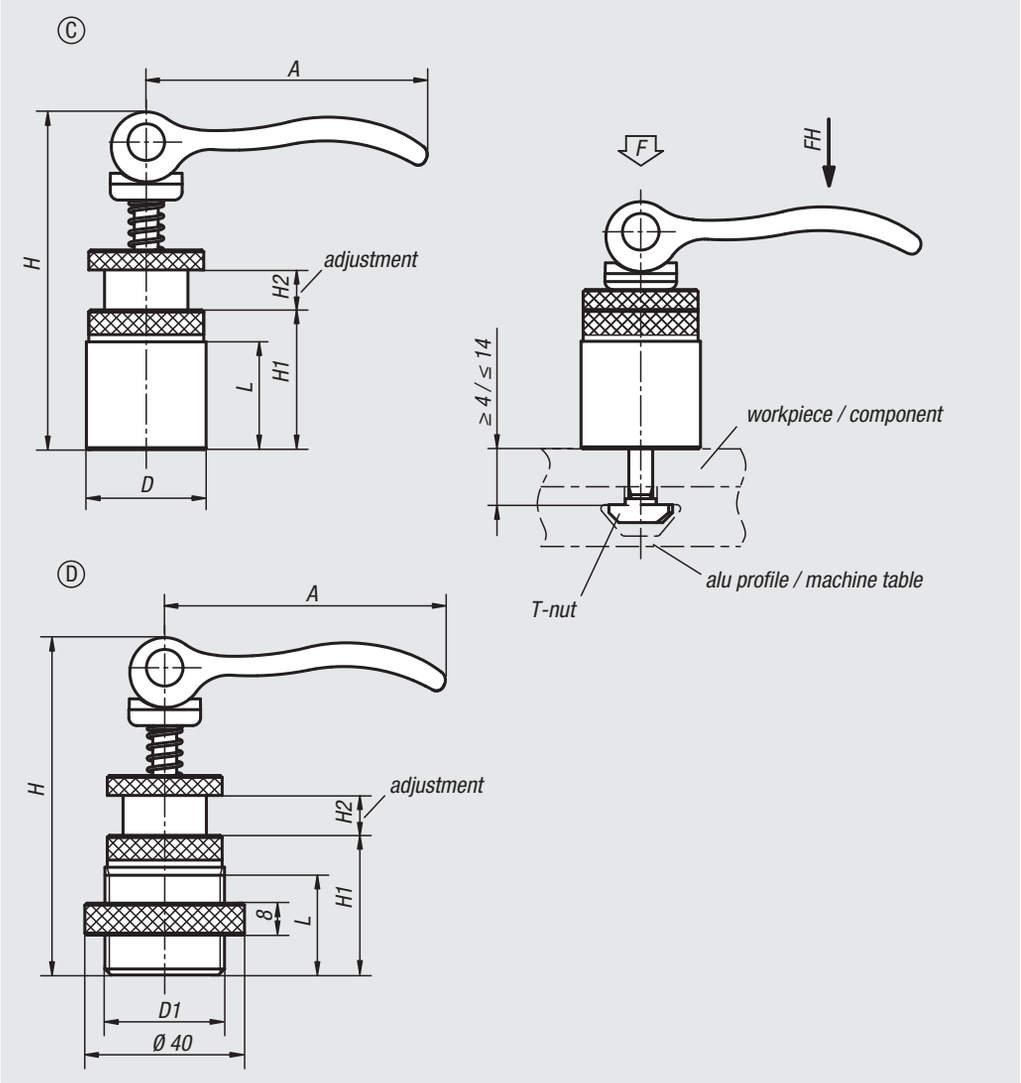

Order No.	Form	D	D1	A	H	H1	H2	L	suitable for slot width	Clamping force F (kN)	Hand force FH N
10500-21150606	C	15	-	35	34	10	6	7	6	1,5	90
10500-21201008	C	20	-	52	44	13	8	10	8	2,5	100
10500-21301008	C	30	-	70,4	84,6	35	10	25	8	4	120
10500-31301008	D	-	M30x2	70,4	84,6	35	10	25	8	4	120

10500

Eccentric clamp modules

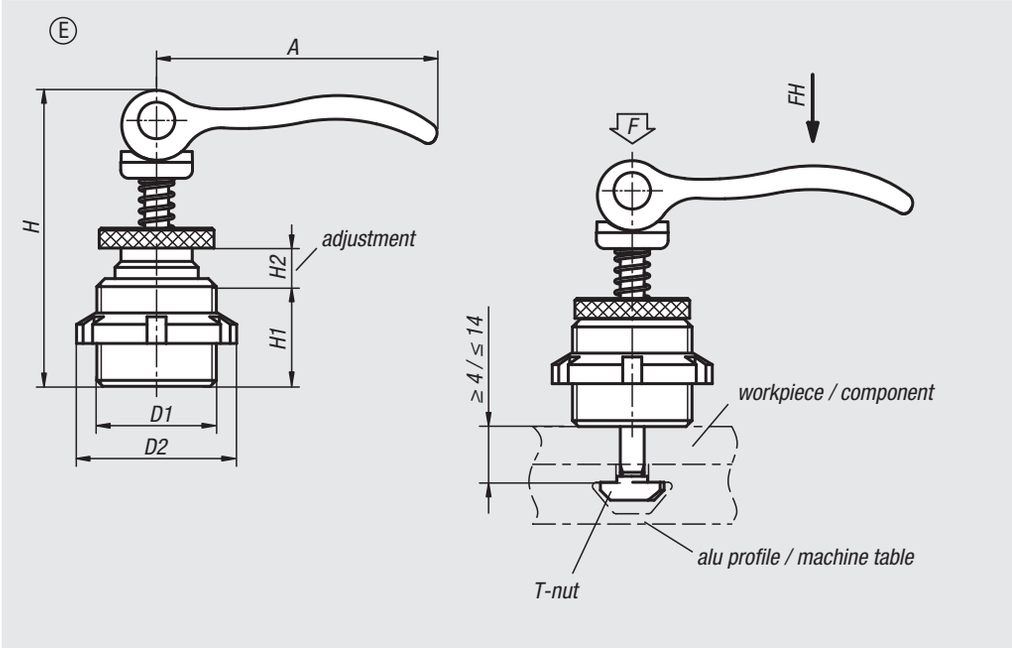

Order No.	Form	D1	D2	A	H	H1	H2	suitable for slot width	Clamping force F (kN)	Hand force FH N
10500-41150706	E	M15x1	25	35	39	14	7	6	1,5	90
10500-41200908	E	M20x1	32	52	50	18	9	8	2,5	100

10505

Cam clamp

for eccentric clamp modules

Material:
Steel.

Version:
Black oxidised.

Sample order:
nlm 10505-2008

Note:
Cam clamp for indirect clamping in combination with eccentric clamp modules 10500 Form C.

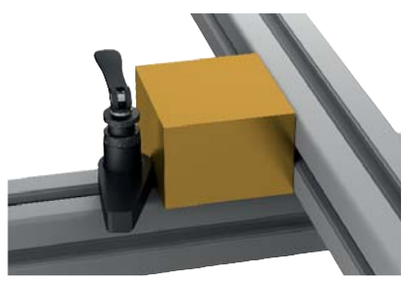

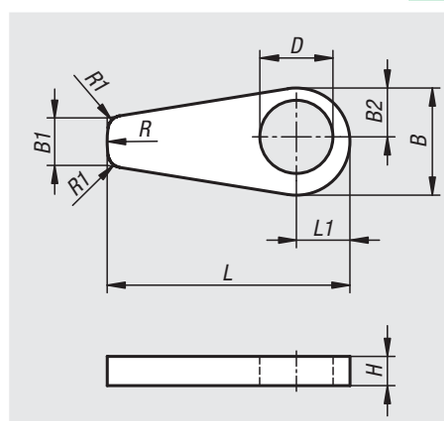

Order No.	B	B1	B2	D	H	L	L1	R	R1
10505-1506	22,1	10	10,05	15,1	6	50	11,05	22	3
10505-2008	29,4	13,34	13,37	20,1	8	66,67	14,7	29,4	3
10505-3010	44,1	20	20,05	30,1	10	100	22,05	44	3

Mounting instructions for eccentric clamp module

Insert by pushing and rotating

Swivel down to clamp

Notes

21000

Slides
Guide rails
Positioning tables
Linear guide systems
Position indicators

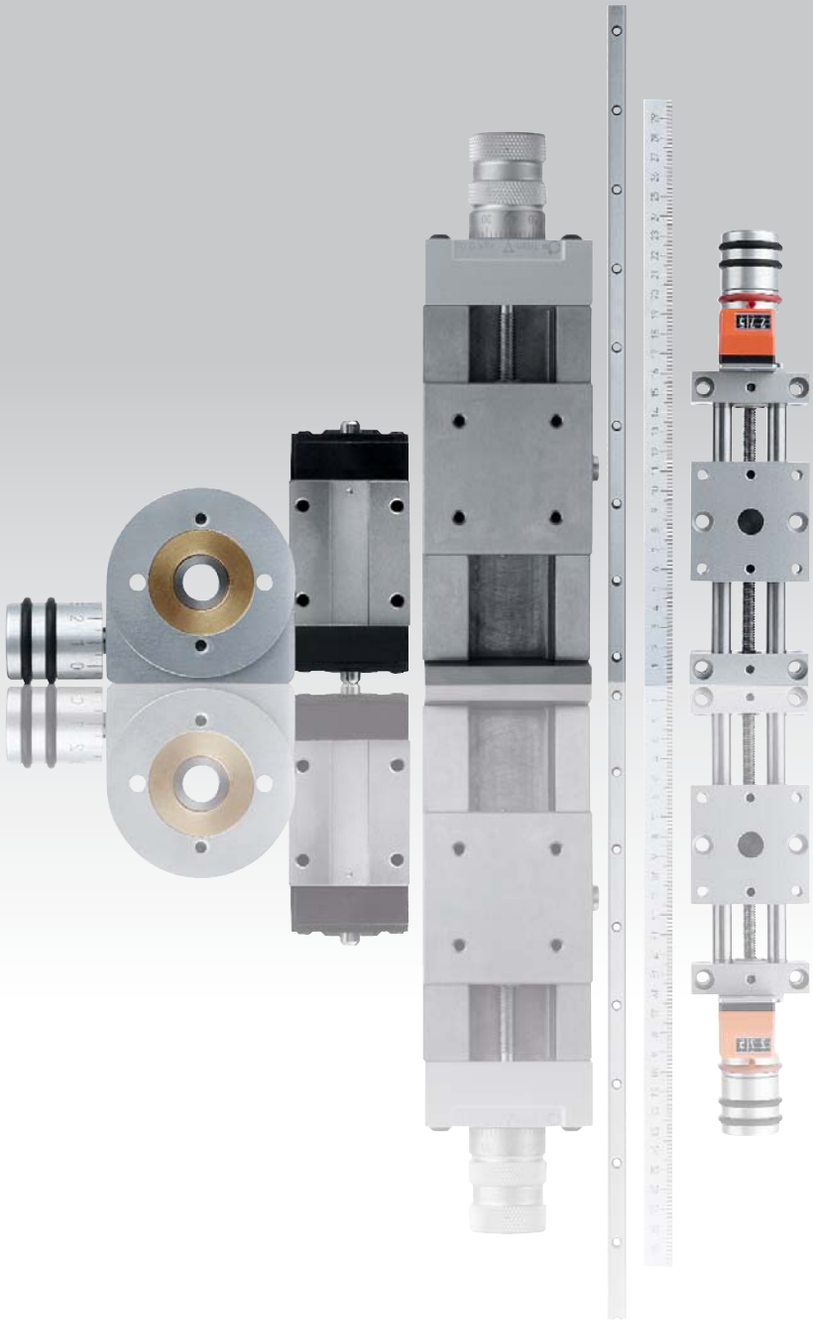

Dovetail slides

with micrometer spindle

Material:
Aluminium EN AW-6063

Sample order:
nlm 21000-050105

Note:
These precision dovetail slides find use in machine and fixture construction, metrology, optical instruments and fine mechanics.
The stated permissible load rating (F) is for static loads.
The torque values only apply for centred carriages.

M1 = counterbore for screw.
TI = number of fastening holes E1/E2/M1 inside
TA = number of fastening holes E/E1/MA outside

Advantages:
- Innovative and safe clamping system without height or lateral displacement.
- No play in guides.
- Rapid subsequent combination in X, Y and Z axes.

Applications:
- Adjustment of machining units, metrology cameras, mirrors, microscopes and laser heads (including the machining of surgical needles).
- Fine adjustment of brazing, plasma and welding heads.
- Focussing of flame nozzles.

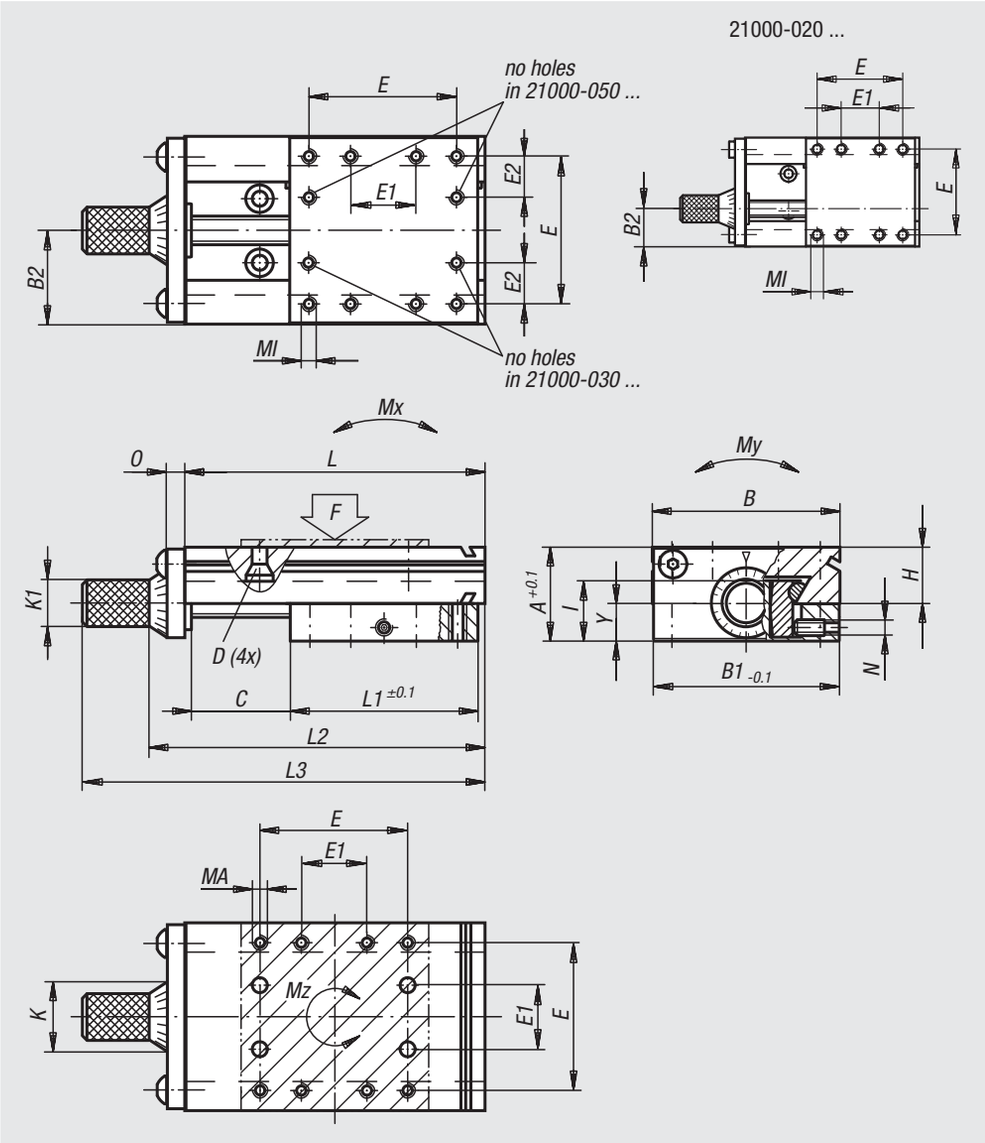

Dovetail slides

with micrometer spindle

Order No.	A	B	B1	B2	C travel	D for screw	E	E1	E2	TI	TA	H	I	K	K1
21000-020030	13	20 -0,3	19,5	8,1	5	M2	12	6	-	8	8	8	8,3	10	6,3
21000-020035	13	20 -0,3	19,5	8,1	10	M2	12	6	-	8	8	8	8,3	10	6,3
21000-020045	13	20 -0,3	19,5	8,1	20	M2	12	6	-	8	8	8	8,3	10	6,3
21000-030040	15	30 -0,3	29,5	13	5	M3	23	8	7,5	10	8	9,8	9,8	10	6,3
21000-030045	15	30 -0,3	29,5	13	10	M3	23	8	7,5	10	8	9,8	9,8	10	6,3
21000-030055	15	30 -0,3	29,5	13	20	M3	23	8	7,5	10	8	9,8	9,8	10	6,3
21000-050067	23	50 -0,3	49,5	25	12	M4	38	16	11	10	8	14,5	15,6	22	14,3
21000-050080	23	50 -0,3	49,5	25	25	M4	38	16	11	10	8	14,5	15,6	22	14,3
21000-050105	23	50 -0,3	49,5	25	50	M4	38	16	11	10	8	14,5	15,6	22	14,3
21000-080110	34	80 -0,5	79,5	40	25	M5	60	34	13	12	8	23	22,5	26	14,3
21000-080135	34	80 -0,5	79,5	40	50	M5	60	34	13	12	8	23	22,5	26	14,3
21000-080160	34	80 -0,5	79,5	40	75	M5	60	34	13	12	8	23	22,5	26	14,3
21000-080185	34	80 -0,5	79,5	40	100	M5	60	34	13	12	8	23	22,5	26	14,3
21000-120150	45	120 -0,5	119	60	25	M5	90	40	25	12	8	30	29	26	14,3
21000-120175	45	120 -0,5	119	60	50	M5	90	40	25	12	8	30	29	26	14,3
21000-120200	45	120 -0,5	119	60	75	M5	90	40	25	12	8	30	29	26	14,3
21000-120225	45	120 -0,5	119	60	100	M5	90	40	25	12	8	30	29	26	14,3

Order No.	L	L1	L2	L3	MI	MA	N	O	Y	Spindle	F N	Mx Nm	My Nm	Mz Nm
21000-020030	30	20	38,2	48,2	M2x3	M2x3	M3	3	5,2	M5x0,5	180	0,45	2	0,3
21000-020035	35	20	43,2	53,2	M2x3	M2x3	M3	3	5,2	M5x0,5	180	0,45	2	0,3
21000-020045	45	20	53,2	63,2	M2x3	M2x3	M3	3	5,2	M5x0,5	180	0,45	2	0,3
21000-030040	40	30	48,2	58,2	M3x4,5	M3x4,5	M4	3	5,8	M5x0,5	350	1,1	4	1
21000-030045	45	30	53,2	63,2	M3x4,5	M3x4,5	M4	3	5,8	M5x0,5	350	1,1	4	1
21000-030055	55	30	63,2	73,2	M3x4,5	M3x4,5	M4	3	5,8	M5x0,5	350	1,1	4	1
21000-050067	67	50	78,2	98,2	M4x6	M4x8	M4	5	11,5	M5x0,5	540	2,5	8	2,3
21000-050080	80	50	91,2	111,2	M4x6	M4x8	M4	5	11,5	M5x0,5	540	2,5	8	2,3
21000-050105	105	50	116,2	136,2	M4x6	M4x8	M4	5	11,5	M5x0,5	540	2,5	8	2,3
21000-080110	110	80	128,3	148,3	M5x7,5	M5x10	M6	8	14	M10x1	750	8	22	7
21000-080135	135	80	153,3	173,3	M5x7,5	M5x10	M6	8	14	M10x1	750	8	22	7
21000-080160	160	80	178,3	198,3	M5x7,5	M5x10	M6	8	14	M10x1	750	8	22	7
21000-080185	185	80	203,3	223,3	M5x7,5	M5x10	M6	8	14	M10x1	750	8	22	7
21000-120150	150	120	172,3	192,3	M5x10	M5x10	M6	12	18,5	M10x1	1500	30	45	18
21000-120175	175	120	197,3	217,3	M5x10	M5x10	M6	12	18,5	M10x1	1500	30	45	18
21000-120200	200	120	222,3	242,3	M5x10	M5x10	M6	12	18,5	M10x1	1500	30	45	18
21000-120225	225	120	247,3	267,3	M5x10	M5x10	M6	12	18,5	M10x1	1500	30	45	18

Straps

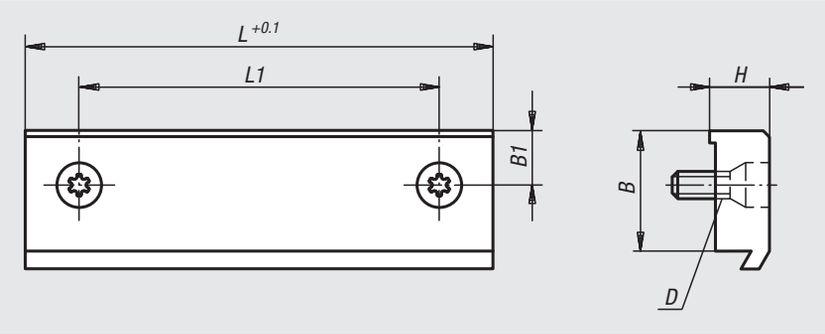

Material:
Aluminium EN AW-6063

Sample order:
nlm 21000-020 (1 strap with clamping screw)

Note:
The straps are used to clamp the dovetail slides in the X, Y and Z axes and to fix the slide unit in the machine. End mounting will reduce the travel.

Order No.	B	B1	D for screw	H	L	L1	travel reduction	suitable for slide
21000-020	5,7	3,7	M2	3,5	19,5	12	3,5	21000-020 ...
21000-030	5,7	2,85	M3	3,5	29,5	23	3,5	21000-030 ...
21000-050	11,5	5,25	M4	8	49,3	38	8	21000-050 ...
21000-080	11,5	6	M5	8	78,9	60	8	21000-080 ...
21000-120	15	10	M5	11	118,4	90	10	21000-120 ...

Fastening screws

for cross table mounting

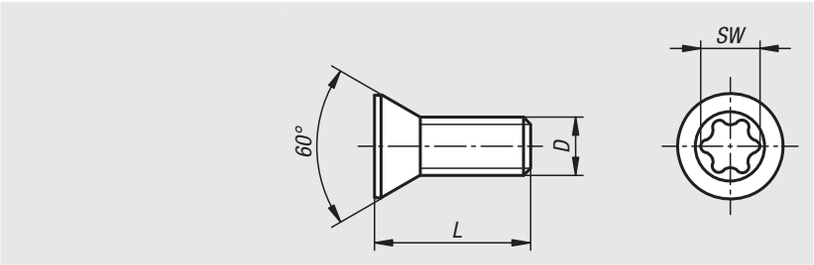

Material:
Steel.

Version:
tempered.

Sample order:
nlm 21000-02055
(Supplied in sets of four)

Note:
Mounting set for constructing a cross table.
Four fastening screws per set.

Order No.	D	L	SW	suitable for slide
21000-02055	M2	5	Torx T7	21000-020 ...
21000-03070	M3	9	Torx T9	21000-030 ...
21000-04100	M4	10	Torx T15	21000-050 ...
21000-05140	M5	17	Torx T20	21000-080 ... / 21000-120 ...

Dovetail slides

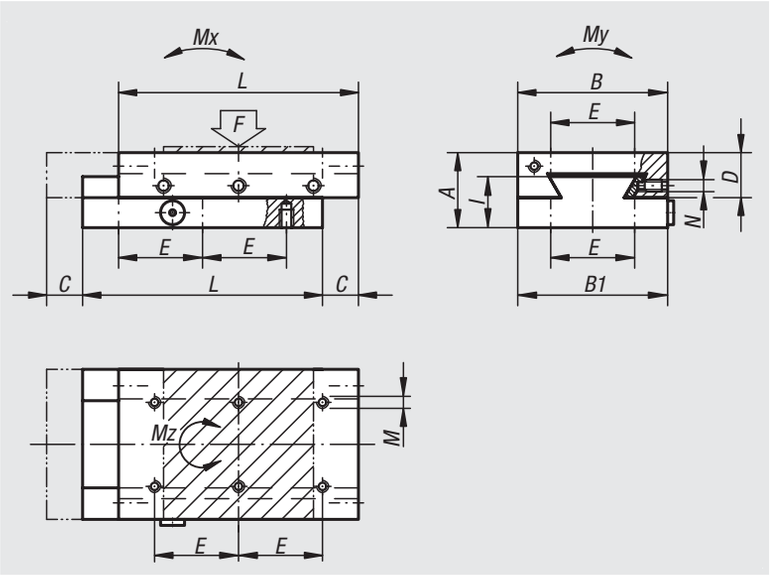

Material:
GJL 250

Version:
Bright, ground.

Sample order:
nlm 21030-050105

Note:
These precision dovetail slides find use in machine and fixture construction, metrology, optical instruments and fine mechanics.
The middle set screw “N” can be replaced by clamping lever Art. No. 06460.
The stated permissible load ratings (F) are designed for dynamic loads with a lifespan of 1 million travel cycles.
For static loads 10 times the F value is permitted.
The torque values apply only for centred carriages.

TI = number of fastening holes E/M inside
TA = number of fastening holes E/M outside

Order No.	A	B	B1	C	D	E	TI	TA	I	L	M	N	F N	Mx Nm	My Nm	Mz Nm
21030-050080	25	50	49,5	15	15	28	6	6	17,6	80	M4	M5	72	4	6	5
21030-050105	25	50	49,5	20	15	28	8	8	17,6	105	M4	M5	95	7	7	8
21030-050130	25	50	49,5	25	15	28	10	10	17,6	130	M4	M5	117	10	9	12
21030-075105	32	75	74,5	20	19,5	62	4	4	22,5	105	M5	M5	128	9	15	10
21030-075130	32	75	74,5	25	19,5	62	4	4	22,5	130	M5	M5	159	14	18	15
21030-100110	40	100	99,5	20	24	86	4	4	27,5	110	M6	M6	156	11	26	12
21030-100135	40	100	99,5	25	24	86	4	4	27,5	135	M6	M6	192	17	32	19
21030-100160	40	100	99,5	30	24	86	4	4	27,5	160	M6	M6	227	24	37	26

Dovetail slides

with end plates

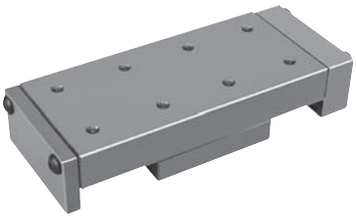

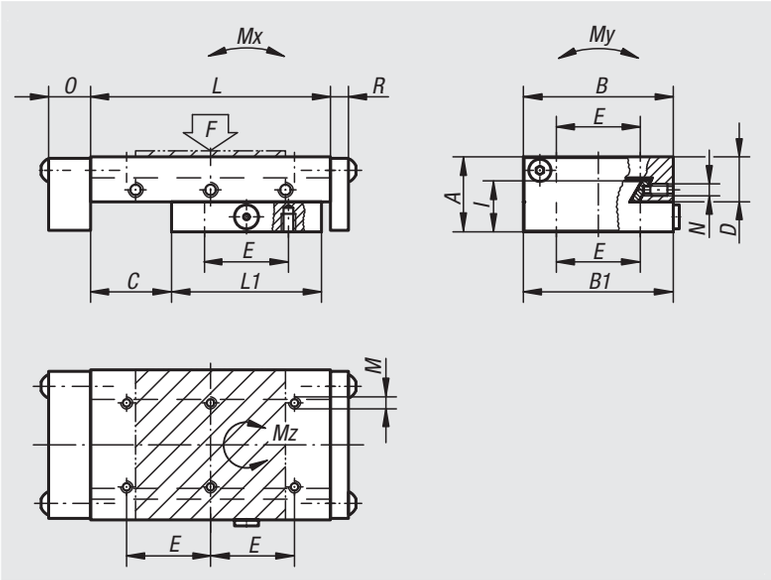

Material:
GJL 250

Version:
Bright, ground.

Sample order:
nlm 21031-100135

Note:
The central set screw “N” can be replaced by a clamping lever 06460.
The stated permissible load values (F) are designed for dynamic loads with a lifespan of 1 million travel cycles.
For static loads 10 times the value F is permitted.
The torque values apply only to centred carriages.

TI = number of fastening holes E/M inside
TA = number of fastening holes E/M outside

Order No.	A	B	B1	C	D	E	TI	TA	I	L	L1	M	N	O	R	F N	Mx Nm	My Nm	Mz Nm
21031-050080	25	50	49,5	25	15	28	4	6	17,6	80	50	M4	M5	14	6	109	2	6	2
21031-050105	25	50	49,5	50	15	28	4	8	17,6	105	50	M4	M5	14	6	61	2	6	2
21031-075105	32	75	74,5	25	19,5	62	4	4	22,5	105	75	M5	M5	15	6	290	5	19	6
21031-075130	32	75	74,5	50	19,5	62	4	4	22,5	130	75	M5	M5	15	6	168	5	19	6
21031-100135	40	100	99,5	25	24	86	4	4	27,5	135	100	M6	M6	15	6	586	11	43	12
21031-100160	40	100	99,5	50	24	86	4	4	27,5	160	100	M6	M6	15	6	351	11	43	12
21031-100260	40	100	99,5	100	24	86	4	6	27,5	260	150	M6	M6	15	6	395	23	63	26

Dovetail slides

with micrometer spindle

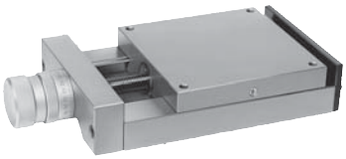

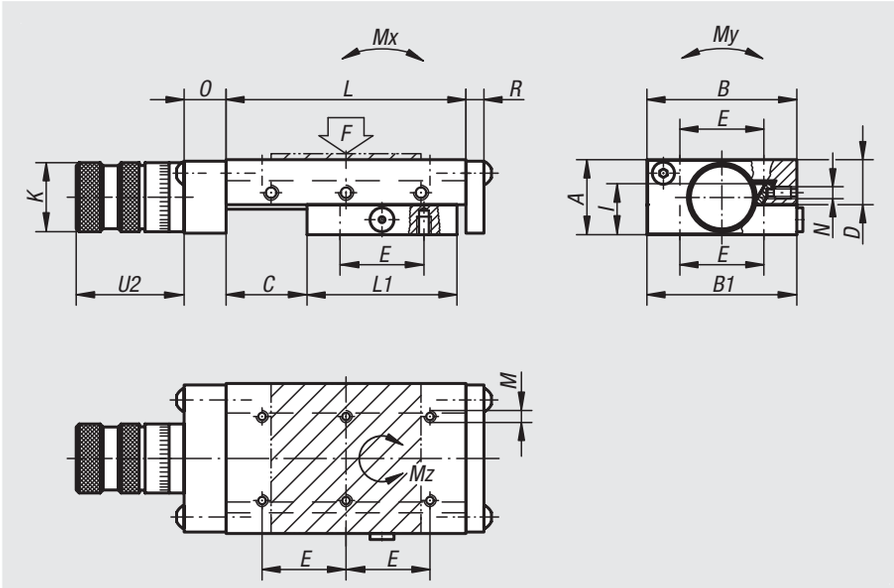

Material:
GJL 250

Version:
Bright, ground.

Sample order:
nlm 21032-075130

Note:
The central set screw “N” can be replaced by a clamping lever 06460. The scale ring is graduated in 0.02 mm increments. Other graduations available on request.
The stated permissible load values (F) are designed for dynamic loads with a lifespan of 1 million travel cycles.
For static loads 10 times the value F is permitted.
The torque values apply only to centred carriages.

TI = number of fastening holes E/M inside
TA = number of fastening holes E/M outside

Order No.	A	B	B1	C	D	E	TI	TA	I	K	L	L1	M	N	O	R	U2	Spindle	F N	Mx Nm	My Nm	Mz Nm
21032-050080	25	50	49,5	25	15	28	4	6	17,6	23	80	50	M4	M5	19	6	31	M6x1	109	2	6	2
21032-050105	25	50	49,5	50	15	28	4	8	17,6	23	105	50	M4	M5	19	6	31	M6x1	61	4	9	4
21032-050205	25	50	49,5	100	15	28	8	16	17,6	23	205	100	M4	M5	19	6	31	M6x1	114	7	12	8
21032-075105	32	75	74,5	25	19,5	62	4	4	22,5	30	105	75	M5	M5	21	6	38	M10x1	290	5	19	6
21032-075130	32	75	74,5	50	19,5	62	4	4	22,5	30	130	75	M5	M5	21	6	38	M10x1	168	5	19	6
21032-075155	32	75	74,5	75	19,5	62	4	4	22,5	30	155	75	M5	M5	21	6	38	M10x1	118	5	19	6
21032-100135	40	100	99,5	25	24	86	4	4	27,5	30	135	100	M6	M6	21	6	38	M10x1	586	11	43	12
21032-100160	40	100	99,5	50	24	86	4	4	27,5	30	160	100	M6	M6	21	6	38	M10x1	351	11	43	12
21032-100260	40	100	99,5	100	24	86	4	6	27,5	30	260	150	M6	M6	21	6	38	M10x1	395	23	63	26
21032-200310	60	200	199	100	37	170	4	4	41,5	47	310	200	M8	M8	28	8	53	Tr16x2	1078	66	283	71

Dovetail slides

with micrometer spindle and handwheel

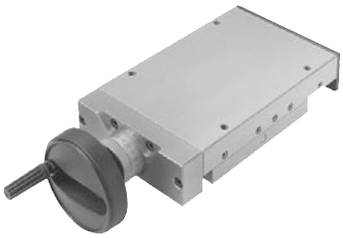

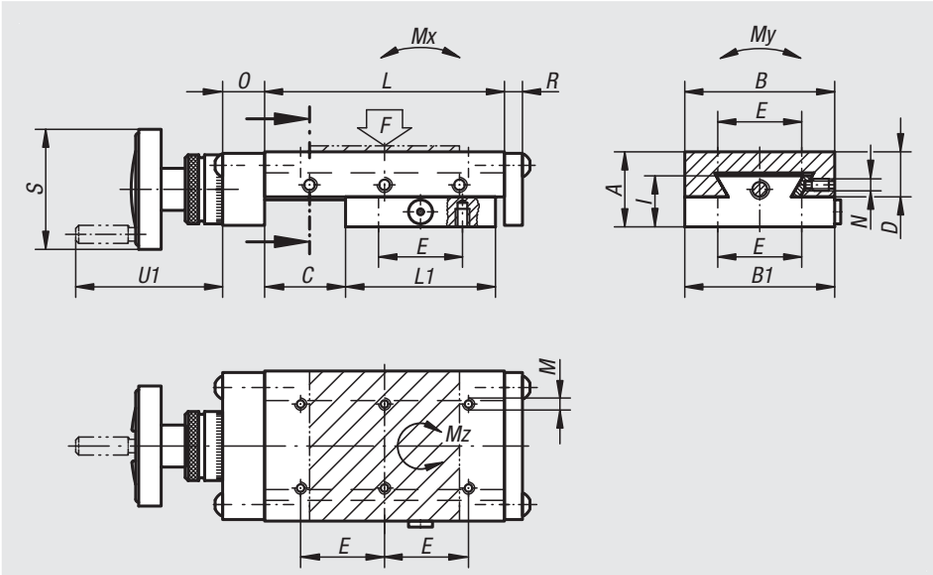

Material:
GJL 250

Version:
Bright, ground.

Sample order:
nlm 21033-150310

Note:
The central set screw “N” can be replaced by a clamping lever 06460. The micrometer scale is graduated in 0.02 mm increments. Other graduations available on request. The revolving grip on the handwheel can fold down.
The stated permissible load values (F) are designed for dynamic loads with a lifespan of 1 million travel cycles.
For static loads 10 times the value F is permitted.
The torque values apply only to centred carriages.

TI = number of fastening holes E/M inside
TA = number of fastening holes E/M outside

Order No.	A	B	B1	C	D	E	TI	TA	I	L	L1	M	N	O	R	S	U1	Spindle	F N	Mx Nm	My Nm	Mz Nm
21033-150210	50	150	149	50	29,5	130	4	4	35,5	210	150	M8	M8	28	8	80	100	Tr16x2	917	31	128	33
21033-150310	50	150	149	100	29,5	130	4	6	35,5	310	200	M8	M8	28	8	80	100	Tr16x2	868	53	169	58

Precision slides

roller mounted

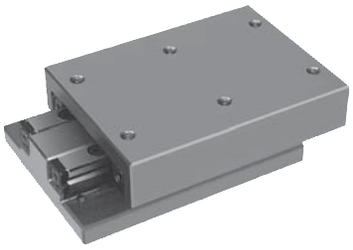

Material:
GJL 250

Version:
Ground

Sample order:
nlm 21034-050105

Note:
A clamp that acts on the side edge without loading the guide geometry can be supplied as an optional extra.
F = permissible dynamic or static load.
The stated permissible loads (F) are for a lifespan of 1 million travel cycles.
The torque values apply only to centred carriages.
Cross slides are also available on request.

TI = number of fastening holes E/M inside
TA = number of fastening holes E/M outside

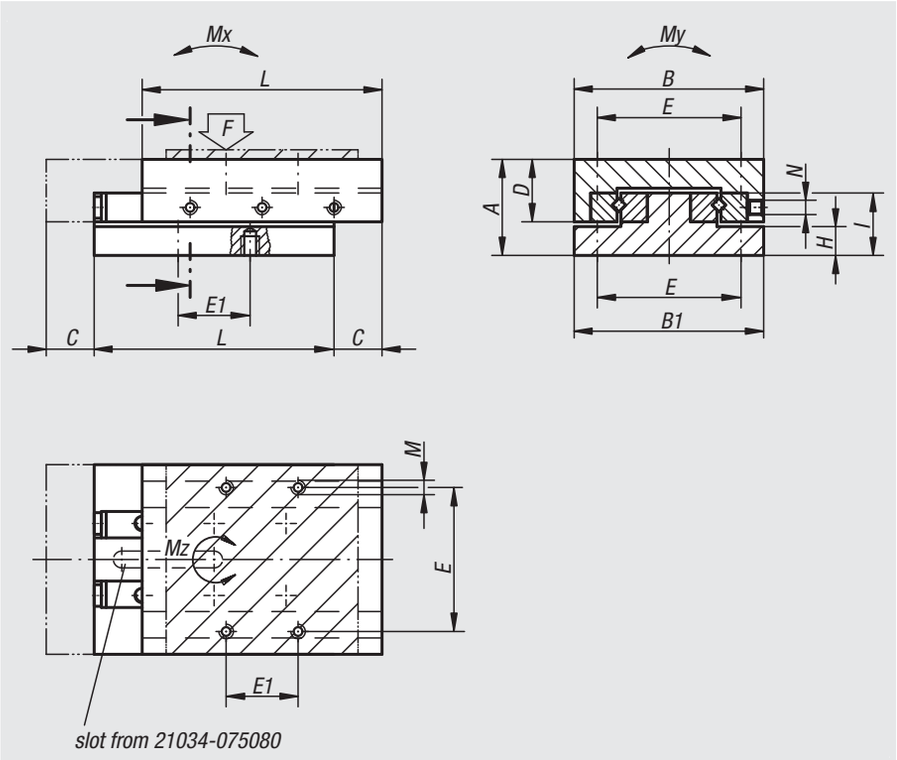

Order No.	A	B	B1	C	D	E	E1	TI	TA	H	I	L	M	N	F N	Mx Nm	My Nm	Mz Nm
21034-040050	20	40	39,5	10	13	30	15	4	4	6,5	13	50	M3	M3	206	1	4	3
21034-0400501	20	40	39,5	17,5	13	30	15	4	4	6,5	13	50	M3	M3	85	1	3	2
21034-040065	20	40	39,5	25	13	30	15	6	6	6,5	13	65	M3	M3	114	1	4	3
21034-040080	20	40	39,5	32,5	13	30	15	8	8	6,5	13	80	M3	M3	143	3	5	5
21034-050055	25	50	49,5	10	17	28	28	4	4	7,5	18	55	M4	M3	283	4	7	6
21034-050080	25	50	49,5	30	17	28	28	6	6	7,5	18	80	M4	M3	189	3	9	7
21034-050105	25	50	49,5	40	17	28	28	8	8	7,5	18	105	M4	M3	301	10	11	15
21034-050155	25	50	49,5	60	17	28	28	12	12	7,5	18	155	M4	M3	476	23	19	33
21034-060055	25	60	59,5	10	17	34	34	4	4	7,5	18	55	M4	M3	288	4	8	6
21034-060080	25	60	59,5	30	17	34	34	6	6	7,5	18	80	M4	M3	192	3	11	7
21034-060105	25	60	59,5	40	17	34	34	6	6	7,5	18	105	M4	M4	305	10	14	15
21034-060155	25	60	59,5	60	17	34	34	10	10	7,5	18	155	M4	M4	483	23	23	34
21034-075080	32	75	74,5	15	21	62	62	4	4	10,5	23	80	M5	M5	487	10	18	15
21034-075105	32	75	74,5	20	21	62	62	4	4	10,5	23	105	M5	M5	690	18	26	27
21034-075130	32	75	74,5	25	21	62	62	4	4	10,5	23	130	M5	M5	895	29	33	42
21034-100110	40	100	99,5	15	27,5	86	86	4	4	12	28	110	M6	M6	1284	43	59	63
21034-100160	40	100	99,5	52,5	27,5	86	86	4	4	12	28	160	M6	M6	946	37	79	68
21034-100210	40	100	99,5	80	27,5	86	86	6	6	12	28	210	M6	M6	1066	60	99	105
21034-100260	40	100	99,5	105	27,5	86	86	6	6	12	28	260	M6	M6	1228	89	119	151

Slides mini

roller mounted

Material:
Outer housing aluminium.
Carriage and bearing steel.

Version:
Outer housing black anodized.
Carriage and bearings ground.
Internal parts hardened.

Sample order:
nlm 21035-030080

Note:
Roller slides run very lightly and can be adjusted with the set screw “N”.
The fastening holes “K” can be used as tapped holes or through holes.
The stated permissible loads (F) are for a lifespan of 1 million travel cycles.
The torque values apply only to centred carriages.

F = permissible loading for dynamic and static loads.
TI = number of fastening holes E3/K inside
TA = number of fastening holes E1/M outside
GI = number of hole rows internal
K = thread M4 countersunk for M3 DIN 974-1

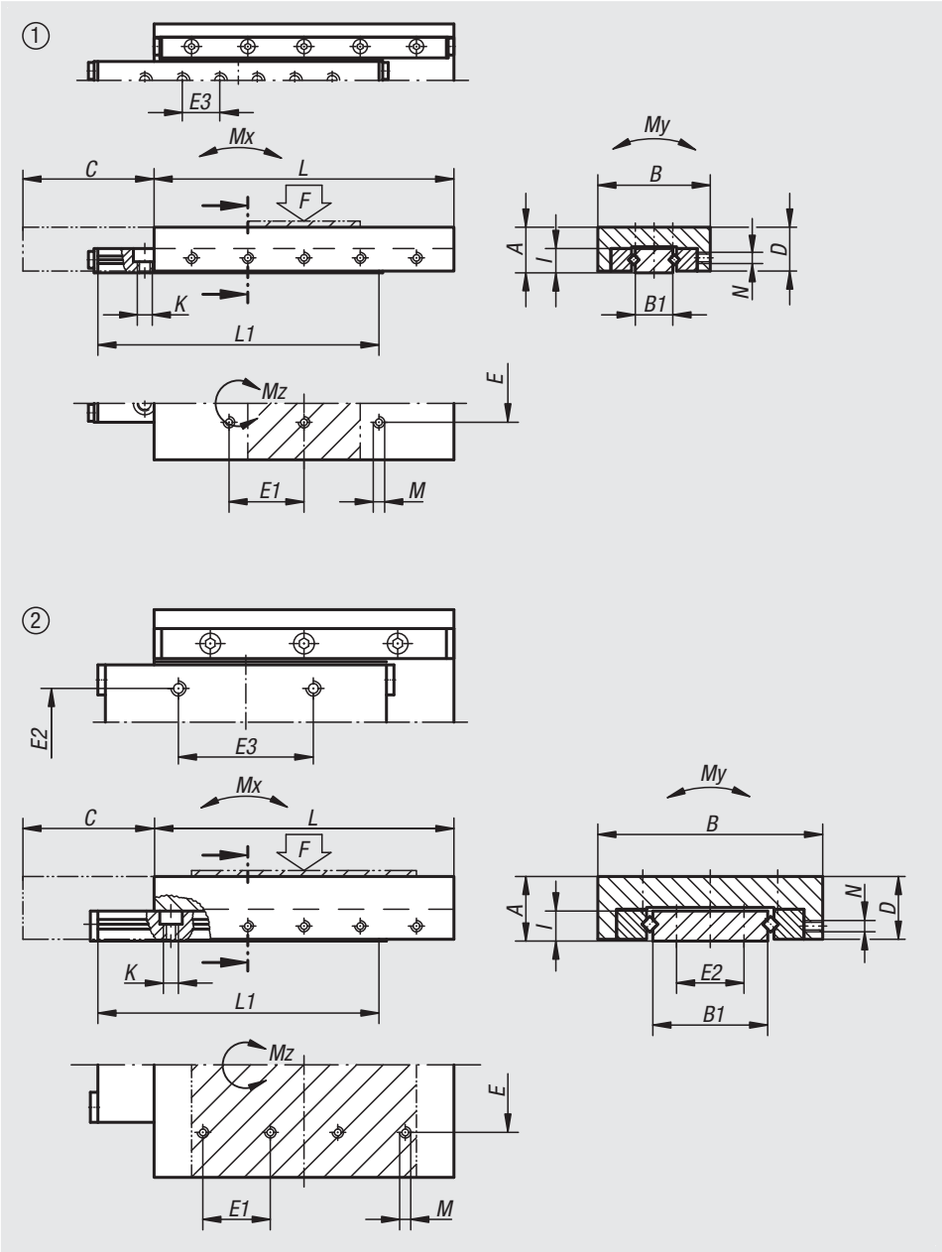

Order No.	Type	A	B	B1	C	D	E	E1	E2	E3	TI	TA	GI	I	K	L	L1	M	N	F N	Mx Nm	My Nm	Mz Nm
21035-030035	1	12	30	10	12	11,7	10	10	-	10	2	6	1	6,3	M4	35	30	M3	M3	168	1	1,9	2
21035-030050	1	12	30	10	18	11,7	10	10	-	10	2	6	1	6,3	M4	50	45	M3	M3	245	3,5	2,6	5,2
21035-030065	1	12	30	10	24	11,7	10	20	-	10	4	6	1	6,3	M4	65	60	M3	M3	361	4,7	3,9	7,9
21035-0300501	1	12	30	10	34	11,7	10	10	-	10	2	6	1	6,3	M4	50	45	M3	M3	131	2,2	1,9	3,3
21035-0300651	1	12	30	10	48	11,7	10	20	-	10	4	6	1	6,3	M4	65	60	M3	M3	161	3,5	2,6	5,2
21035-030080	1	12	30	10	30	11,7	10	20	-	10	6	6	1	6,3	M4	80	75	M3	M3	432	9,1	4,5	13,3
21035-030095	1	12	30	10	40	11,7	10	20	-	10	8	10	1	6,3	M4	95	90	M3	M3	466	11,6	5,1	16,9
21035-040055	1	15	40	14,4	20	14,7	20	20	-	20	2	6	1	8,3	M4	55	50	M3	M3	231	4,6	4,6	6,8
21035-040080	1	15	40	14,4	30	14,7	20	20	-	20	2	6	1	8,3	M4	80	75	M3	M3	487	10,3	7,6	15,3
21035-040105	1	15	40	14,4	40	14,7	20	20	-	20	4	10	1	8,3	M4	105	100	M3	M3	689	18,6	10,6	27,3
21035-040155	1	15	40	14,4	120	14,7	20	20	-	20	6	14	1	8,3	M4	155	150	M3	M3	489	23,7	12,2	34,8
21035-060055	2	17	60	30,6	20	16,7	36	18	18	18	4	4	2	8,3	M4	55	50	M3	M4	294	4,6	7	6,9
21035-060080	2	17	60	30,6	30	16,7	36	18	18	36	4	8	2	8,3	M4	80	75	M3	M4	492	10,4	11,6	15,5
21035-060105	2	17	60	30,6	40	16,7	36	18	18	36	4	12	2	8,3	M4	105	100	M3	M4	697	18,8	16,2	27,6

Precision slides

roller mounted with end plates

Material:
GJL 250

Version:
Ground

Sample order:
nlm 21038-040090

Note:
Slide is also available in aluminium on request.
The stated permissible loads (F) are for a lifespan of 1 million travel cycles.
The torque values apply only to centred carriages.

F = permissible loading for dynamic and static loads.
TI = number of fastening holes E1/M inside.
TA = number of fastening holes E1/M outside.

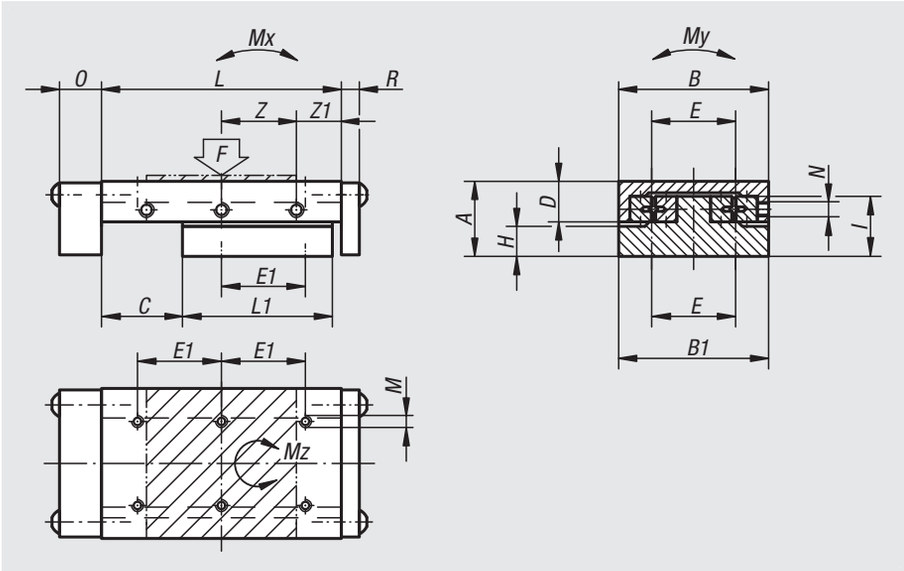

Order No.	A	B	B1	C	D	E	E1	TI	TA	H	I	L	L1	M	N	O	R	Z	Z1	F N	Mx Nm	My Nm	Mz Nm
21038-040090	20	40	39,5	40	13	30	15	6	8	6,5	13	90	45	M3	M3	12	3	15x2	30	77	1	3	2
21038-050105	25	50	49,5	25	17	28	28	6	8	7,5	18	105	75	M4	M3	14	6	25x2	27,5	623	9	14	15
21038-060180	25	60	59,5	75	17	34	34	6	12	7,5	18	180	100	M4	M4	14	6	25x3	52,5	349	9	17	16
21038-100260	40	100	99,5	100	27,5	86	86	4	6	12	28	260	150	M6	M6	15	6	50x2	80	990	37	80	69

Examples of dovetail slides

Example of slides mounted as a manual cross table

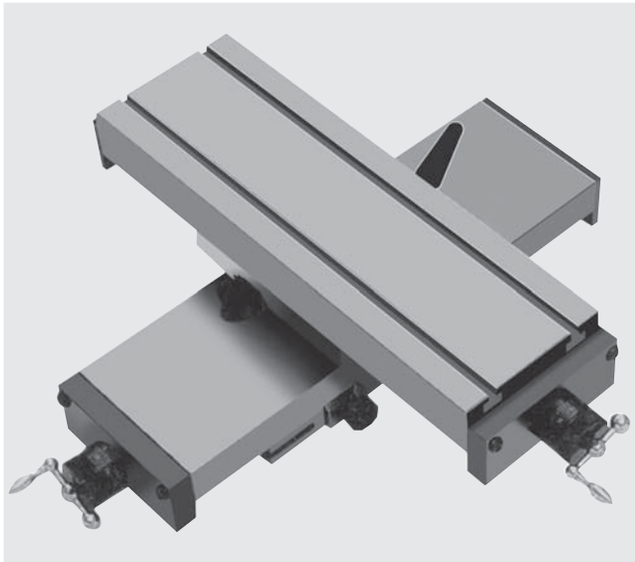

Precision slides

roller mounted with micrometer spindle

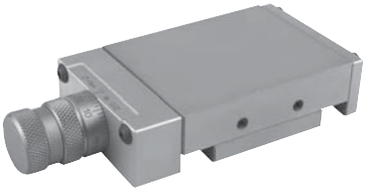

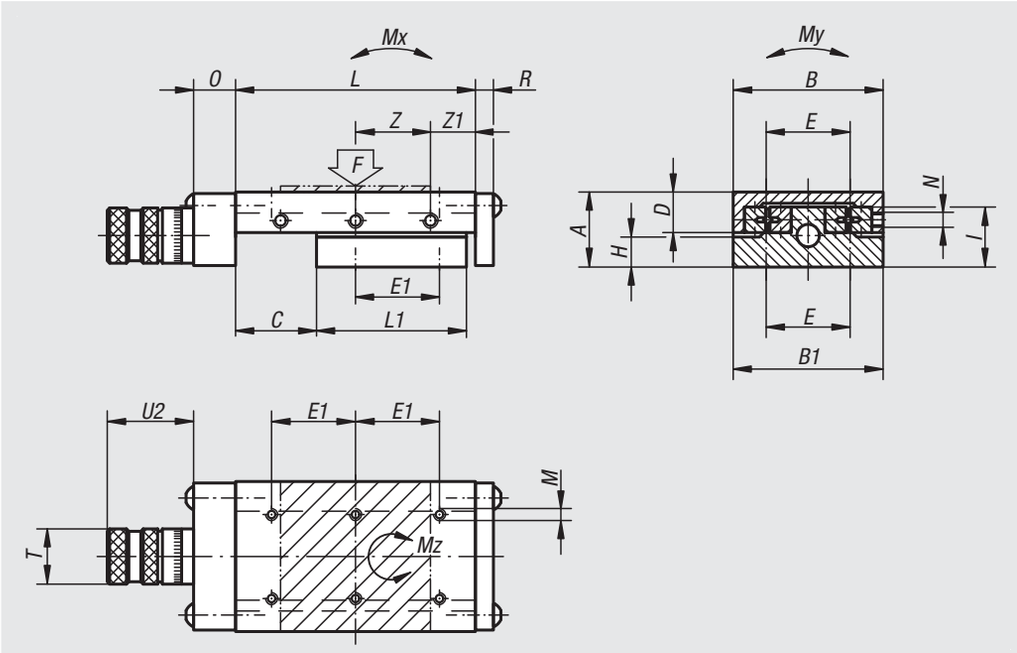

Material:
GJL 250

Version:
Bright, ground.

Sample order:
nlm 21040-040045

Note:
Slides available in aluminium on request. The scale ring is graduated in 0.02 mm increments. The version 21040-040045 is graduated in 0.01 mm increments. Other graduations are available on request.
The stated permissible loads (F) are for a lifespan of 1 million travel cycles.
The torque values apply only to centred carriages.

* Spacing of external fastening holes = 25 mm.

F = permissible loading for dynamic and static loads.
TI = number of fastening holes E1/M inside.
TA = number of fastening holes E1/M outside.

Order No.	A	B	B1	C	D	E	E1	TI	TA	H	I	L	L1	M	N	O	R	T	U2	Z	Z1	Spindle	F N	Mx Nm	My Nm	Mz Nm
21040-040045	20	40	39,5	10	13	30	15*	4	4	6,5	13	45	30	M3	M3	12	3	16	25	15x1	15	M5x0,5	183	1	3	2
21040-050075	25	50	49,5	20	17	28	28	4	6	7,5	18	75	50	M4	M3	14	6	23	36	25x1	25	M6x1	286	4	7	6
21040-060075	25	60	59,5	20	17	34	34	4	4	7,5	18	75	50	M4	M4	14	6	23	36	25x1	25	M6x1	289	4	8	6
21040-100360	40	100	99,5	150	27,5	86	86	6	8	12	28	360	200	M6	M6	15	6	30	44	50x3	105	M10x1	1130	61	100	107

Guide rails

with cross rollers

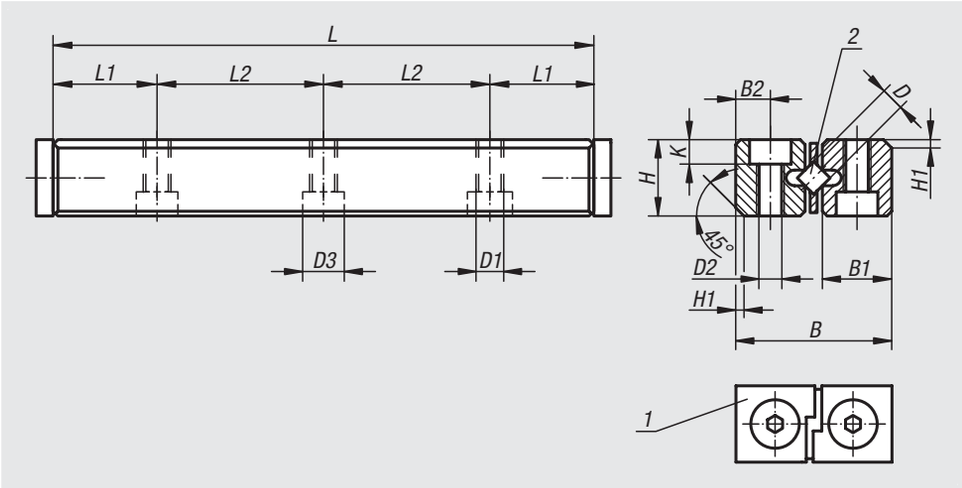

Material:
Guide rail tool steel 1.2842.
End pieces 1.0531.

Version:
Guide rails hardened (60-62 HRC) and ground.
End piece black oxidised.

Sample order:
nlm 21050-02030 (1 guide rail, without roller cage)

Note:
See 21052 for the suitable roller cage.
These guide rails are mounted on the slides 21034, 21035, 21038 and 21040 and can be used as replacement parts.

Drawing reference:
1) end part
2) without roller cage (21052)

Order No.	D	L	L1	L2	B	B1	B2	H	H1	K	D1	D2	D3
21050-02030	2	30	7,5	1x15	12	5,5	2,5	6	1	2,2	M3	2,55	4,4
21050-02045	2	45	7,5	2x15	12	5,5	2,5	6	1	2,2	M3	2,55	4,4
21050-02060	2	60	7,5	3x15	12	5,5	2,5	6	1	2,2	M3	2,55	4,4
21050-03050	3	50	12,5	1x25	18	8,3	3,5	8	1	3,2	M4	3,4	6
21050-03075	3	75	12,5	2x25	18	8,3	3,5	8	1	3,2	M4	3,4	6
21050-03100	3	100	12,5	3x25	18	8,3	3,5	8	1	3,2	M4	3,4	6
21050-03125	3	125	12,5	4x25	18	8,3	3,5	8	1	3,2	M4	3,4	6
21050-03150	3	150	12,5	5x25	18	8,3	3,5	8	1	3,2	M4	3,4	6
21050-06100	6	100	25	1x50	31	13,9	6	15	1,8	5,2	M6	5,4	10
21050-06150	6	150	25	2x50	31	13,9	6	15	1,8	5,2	M6	5,4	10
21050-06200	6	200	25	3x50	31	13,9	6	15	1,8	5,2	M6	5,4	10
21050-06250	6	250	25	4x50	31	13,9	6	15	1,8	5,2	M6	5,4	10
21050-06300	6	300	25	5x50	31	13,9	6	15	1,8	5,2	M6	5,4	10
21050-06350	6	350	25	6x50	31	13,9	6	15	1,8	5,2	M6	5,4	10

Roller cages

for guide rails

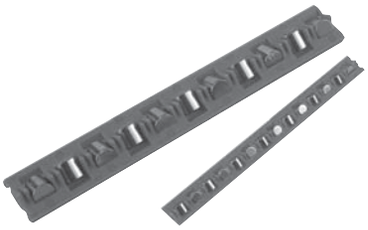

Dimensioning formula:

$$\text{number of rollers in cage} = \frac{\text{length of guide rail - ½ travel}}{\text{division T}}$$

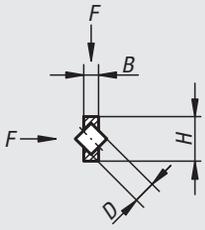

Material:
Cage plastic.
Rollers tool steel 1.2842

Sample order:
nlm 21052-02010 include number of rollers in cage (010 = 10 rollers).
Dimensioning formula see right.

Order No.	D	No. of rollers	B	H	T (division)	Load F N/roller
21052-02* **	2	2-200	0,5	4,5	4	60
21052-03* **	3	2-200	1	7,5	5	100
21052-06* **	6	2-200	2,4	15	9	400

Notes

Positioning tables short

with coaxial electric drive

Material:
Bearing block and carriage aluminium alloy.
Guide column and threaded spindle stainless steel.
Plain bearing for guide columns and spindle nut high-quality special plastic.
Claw coupling aluminium with polyurethane coupling spider.

Version:
Aluminium alloy anodized.
Stainless steel hardened and ground.
Threaded spindle with ball bearing.

Sample order:
nlm 21080-080

Note for ordering:
The unit is supplied with the position of cable outlet or control unit as shown in the drawing. Other combinations can be selected online with our configurator.

Note:
Positioning tables for motorised adjustment and positioning tasks. The plain bearings and spindle nuts are suitable for dry running, however lubrication with a grease for plastic plain bearings is recommended. The suitable programming software and interface cable for the stepper motor with positioning control are available as accessories (21088).
The stepper motor with a resolution of 200 increments per rotation allows a single direction calculated positioning accuracy of 0.005 mm. The absolute single direction positioning accuracy is 0.01 mm. The system can be operated with a switch-on time of 100%.

Can be combined with all other parts of the same size.

Technical data:
Threaded spindle pitch: 2 mm
Axial backlash of threaded spindle: <0.04 mm
Radial play of guides: <0.02 mm
Max. input speed: 600 rpm
Max. travel speed: 20 mm/s
Max. duty cycle: 100 %
Application temperature: +10 °C to +50 °C

Order No.	Size	Form	Version
21080-080	8	A	without motor
21080-0811	8	B	with stepper motor
21080-0821	8	C	with stepper motor with integrated positioning control
21080-120	12	A	without motor
21080-1211	12	B	with stepper motor
21080-1221	12	C	with stepper motor with integrated positioning control

Positioning tables short

with coaxial electric drive

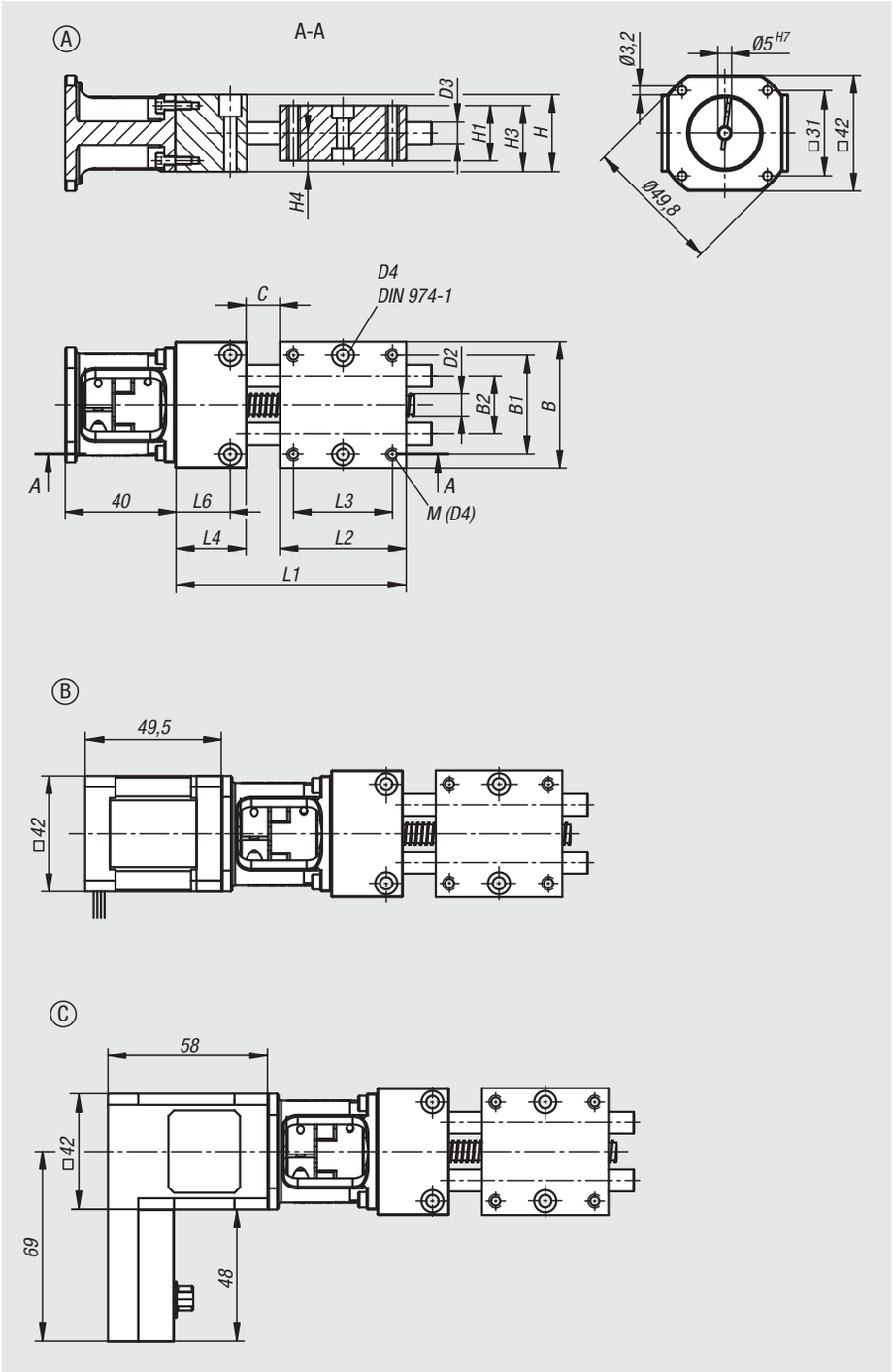

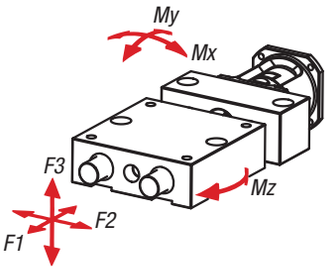

Specifications

Size	B	B1	B2	C (travel)	D2	D3	D4	H	H1	H3	H4	L1	L2	L3	L4	L6
8	46	36	21	24	8x2	8	4	28	20	24	14	93,5	46	36	26	20
12	75	60	38	30	8x2	12	6	29,5	25	28	15,5	133	75	60	30	15

Force tables

Size	F1 N	F2 N	F3 N	Mx Nm	My Nm	Mz Nm
8	60	60	30	0,5	0,5	2
12	60	100	60	0,8	0,8	3

Positioning tables short

with lateral electric drive

Material:
Bearing block and carriage aluminium alloy.
Guide column and threaded spindle stainless steel.
Plain bearing for guide columns and spindle nut high-quality special plastic.
Toothed belts neoprene, profile 3M.

Version:
Aluminium alloy anodized.
Stainless steel hardened and ground.
Threaded spindle with ball bearing.

Sample order:
nlm 21081-0810

Note for ordering:
The unit is supplied with the position of the drive unit, cable outlet or control unit as shown in the drawing. Other combinations can be selected online with our configurator.

Note:
Positioning tables for motorised adjustment and positioning tasks. The plain bearings and spindle nuts are suitable for dry running, however lubrication with a grease for plastic plain bearings is recommended. The suitable programming software and interface cable for the stepper motor with positioning control are available as accessories (21088).
The stepper motor with a resolution of 200 increments per rotation allows a single direction calculated positioning accuracy of 0.005 mm. The absolute single direction positioning accuracy is 0.01 mm. The system can be operated with a switch-on time of 100%.

Can be combined with all other parts of the same size.

Technical data:
Threaded spindle pitch: 2 mm
Axial backlash of threaded spindle: <0.04 mm
Radial play of guides: <0.02 mm
Max. input speed: 600 rpm
Max. travel speed: 20 mm/s
Max. duty cycle: 100 %
Application temperature: +10 °C to +50 °C

Order No.	Size	Form	Version
21081-0810	8	A	without motor
21081-08111	8	B	with stepper motor
21081-08121	8	C	with stepper motor with integrated positioning control
21081-1210	12	A	without motor
21081-12111	12	B	with stepper motor
21081-12121	12	C	with stepper motor with integrated positioning control

Positioning tables short

with lateral electric drive

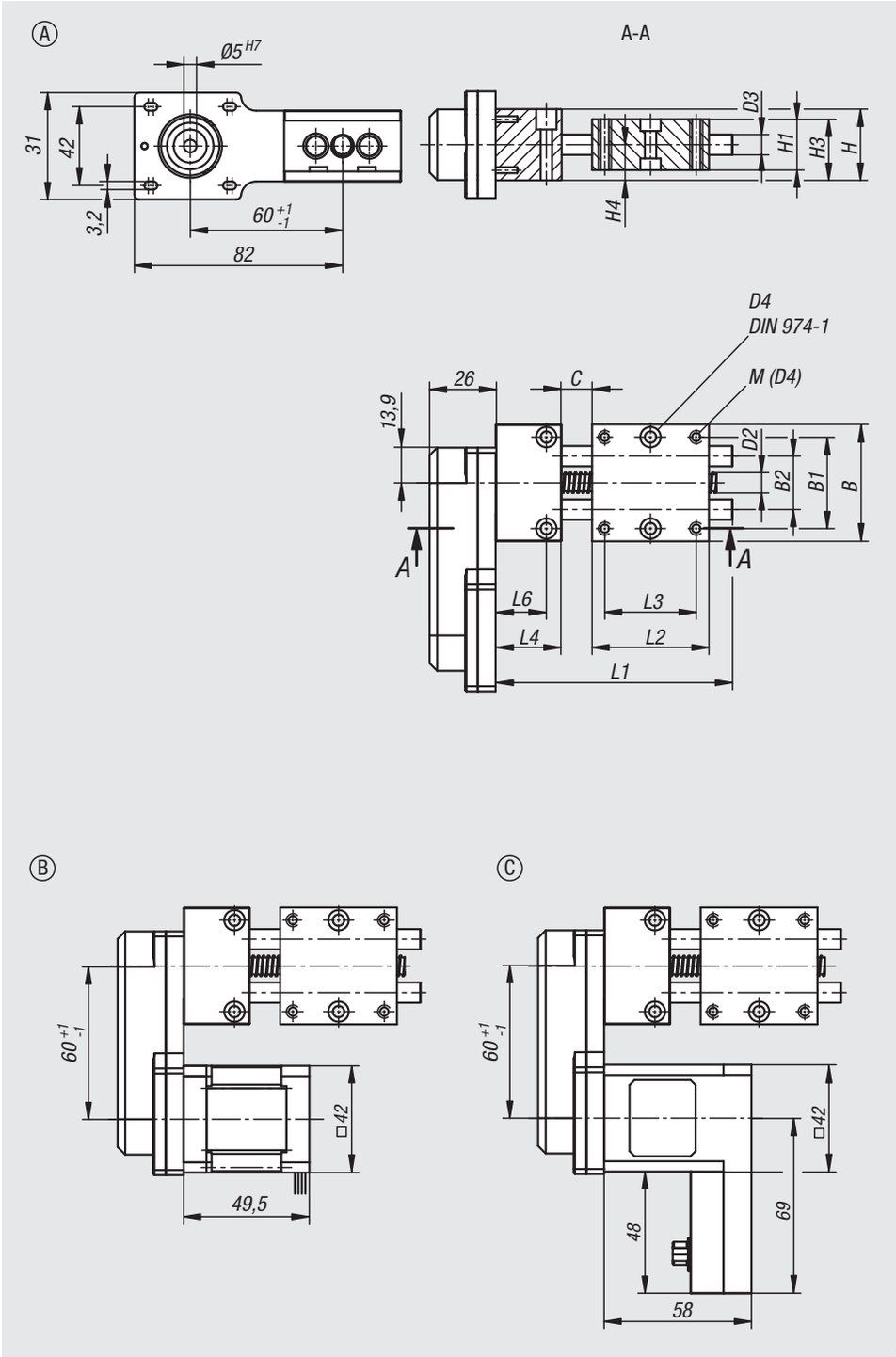

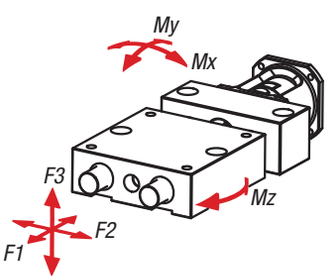

Specifications

Size	B	B1	B2	C (travel)	D2	D3	D4	H	H1	H3	H4	L1	L2	L3	L4	L6
8	46	36	21	24	8x2	8	4	28	20	24	14	93,5	46	36	26	20
12	75	60	38	30	8x2	12	6	29,5	25	28	15,5	133	75	60	30	15

Force tables

Size	F1 N	F2 N	F3 N	Mx Nm	My Nm	Mz Nm
8	60	60	30	0,5	0,5	2
12	60	100	60	0,8	0,8	3

Positioning tables long

with coaxial electric drive

Material:
Bearing block and carriage aluminium alloy.
Guide column and threaded spindle stainless steel.
Plain bearing for guide columns and spindle nut high-quality special plastic.
Claw coupling aluminium with polyurethane coupling spider.

Version:
Aluminium alloy anodized.
Stainless steel hardened and ground.
Threaded spindle with ball bearing.

Sample order:
nlm 21082-080

Note for ordering:
The unit is supplied with the position of cable outlet or control unit as shown in the drawing. Other combinations can be selected online with our configurator.

Note:
Positioning tables for motorised adjustment and positioning tasks. The plain bearings and spindle nuts are suitable for dry running, however lubrication with a grease for plastic plain bearings is recommended. The suitable programming software and interface cable for the stepper motor with positioning control are available as accessories (21088).
The stepper motor with a resolution of 200 increments per rotation allows a single direction calculated positioning accuracy of 0.005 mm. The absolute single direction positioning accuracy is 0.01 mm. The system can be operated with a switch-on time of 100%.

Can be combined with all other parts of the same size.

Technical data:
Threaded spindle pitch: 2 mm
Axial backlash of threaded spindle: <0.04 mm
Radial play of guides: <0.02 mm
Max. input speed: 600 rpm
Max. travel speed: 20 mm/s
Max. duty cycle: 100 %
Application temperature: +10 °C to +50 °C

Order No.	Size	Form	Version
21082-080	8	A	without motor
21082-0811	8	B	with stepper motor
21082-0821	8	C	with stepper motor with integrated positioning control
21082-120	12	A	without motor
21082-1211	12	B	with stepper motor
21082-1221	12	C	with stepper motor with integrated positioning control

Positioning tables long

with coaxial electric drive

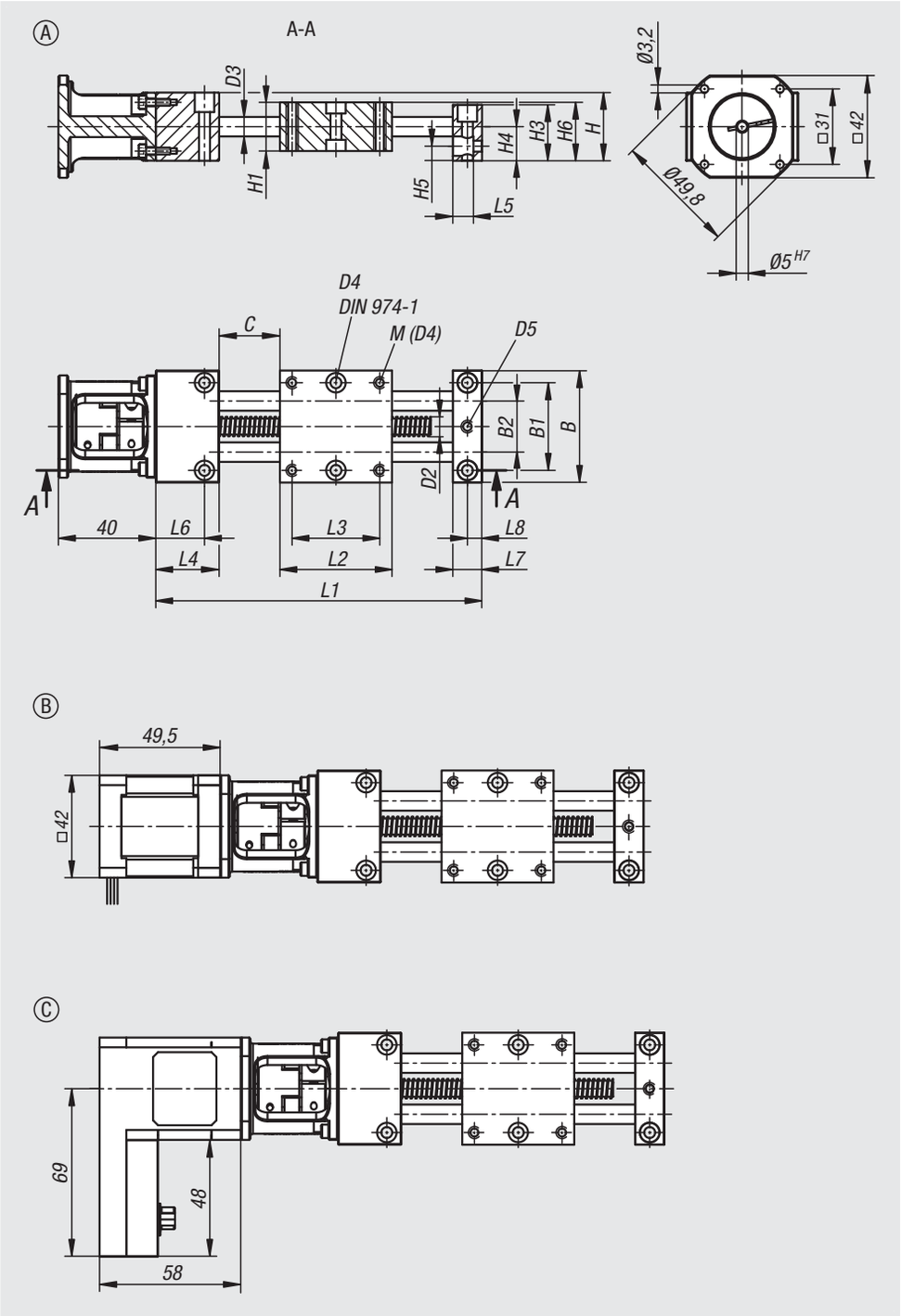

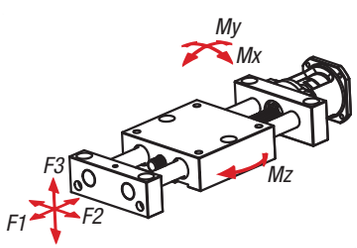

Specifications

Size	B	B1	B2	C (travel)	D2	D3	D4	D5	H	H1	H3	H4	H5	H6	L1	L2	L3	L4	L5	L6	L7	L8
8	46	36	21	50	8x2	8	4	M4	28	20	23	14	6	24	134	46	36	26	8,5	20	12	6
12	75	60	38	75	8x2	12	6	M4	29,5	25	27	15,5	7	28	180	75	60	15	11	7,5	15	7,5

Force tables

Size	F1 N	F2 N	F3 N	Mx Nm	My Nm	Mz Nm
8	60	80	60	0,7	0,7	2
12	60	120	100	1	1	3

Positioning tables long

with lateral electric drive

Material:
Bearing block and carriage aluminium alloy.
Guide column and threaded spindle stainless steel.
Plain bearing for guide columns and spindle nut high-quality special plastic.
Toothed belts neoprene, profile 3M.

Version:
Aluminium alloy anodized.
Stainless steel hardened and ground.
Threaded spindle with ball bearing.

Sample order:
nlm 21083-0810

Note for ordering:
The unit is supplied with the position of the drive unit, cable outlet or control unit as shown in the drawing. Other combinations can be selected online with our configurator.

Note:
Positioning tables for motorised adjustment and positioning tasks. The plain bearings and spindle nuts are suitable for dry running, however lubrication with a grease for plastic plain bearings is recommended. The suitable programming software and interface cable for the stepper motor with positioning control are available as accessories (21088).
The stepper motor with a resolution of 200 increments per rotation allows a single direction calculated positioning accuracy of 0.005 mm. The absolute single direction positioning accuracy is 0.01 mm. The system can be operated with a switch-on time of 100%.

Can be combined with all other parts of the same size.

Technical data:
Threaded spindle pitch: 2 mm
Axial backlash of threaded spindle: <0.04 mm
Radial play of guides: <0.02 mm
Max. input speed: 600 rpm
Max. travel speed: 20 mm/s
Max. duty cycle: 100 %
Application temperature: +10 °C to +50 °C

Order No.	Size	Form	Version
21083-0810	8	A	without motor
21083-08111	8	B	with stepper motor
21083-08121	8	C	with stepper motor with integrated positioning control
21083-1210	12	A	without motor
21083-12111	12	B	with stepper motor
21083-12121	12	C	with stepper motor with integrated positioning control

Positioning tables long

with lateral electric drive

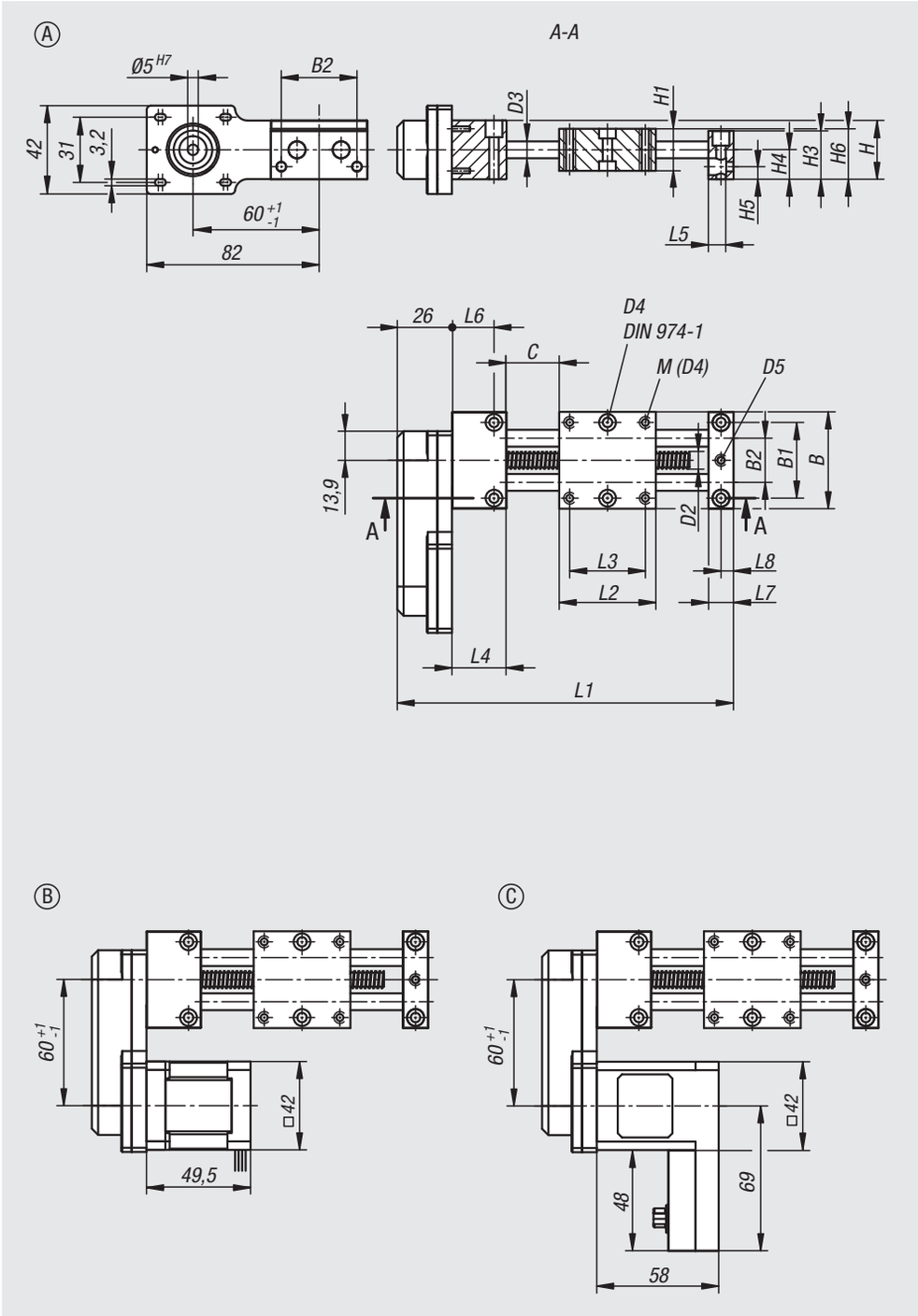

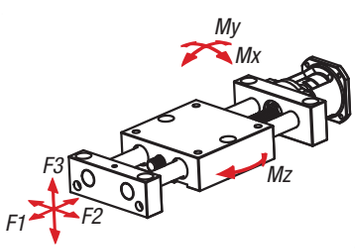

Specifications

Size	B	B1	B2	C (travel)	D2	D3	D4	D5	H	H1	H3	H4	H5	H6	L1	L2	L3	L4	L5	L6	L7	L8
8	46	36	21	50	8x2	8	4	M4	28	20	23	14	6	24	134	46	36	26	8,5	20	12	6
12	75	60	38	75	8x2	12	6	M4	29,5	25	27	15,5	7	28	180	75	60	15	11	7,5	15	7,5

Force tables

Size	F1 N	F2 N	F3 N	Mx Nm	My Nm	Mz Nm
8	60	80	60	0,7	0,7	2
12	60	120	100	1	1	3

Positioning tables rotary

with coaxial electric drive

Material:
Base and rotary table aluminium alloy.
Hollow shaft stainless steel.
Pre-loaded worm gear steel.
Claw coupling aluminium with polyurethane coupling spider.

Version:
Aluminium alloy anodized.

Sample order:
nlm 21085-120

Note for ordering:
The unit is supplied with the position of cable outlet or control unit as shown in the drawing. Other combinations can be selected online with our configurator.

Note:
Rotary positioning tables for motorised adjustment and positioning tasks. The pre-loaded worm gear runs virtually play-free. The bearing of the worm shaft offers maximum radial rotational accuracy. Cables can be routed through the large bore in the hollow shaft. The adjustable positioning ring is used to determine the rotational reference point to the position of the assembled part. Proximity switches can be mounted with the optionally available sensor holder (21094). The suitable programming software and interface cable for the stepper motor with positioning control are available as accessories (21088).
The stepper motor with a resolution of 200 increments per rotation allows a single direction calculated positioning accuracy of 0.005 mm. The absolute single direction positioning accuracy is 0.01 mm. The system can be operated with a switch-on time of 100%.

Can be combined with all other parts of the same size.

Technical data:
Transmission ratio: 55:1
Backlash: <0,1°
Radial play: <0.02 mm
Max. input speed: 600 rpm
Max. duty cycle: 100 %
Required input torque: 0.15 Nm
Rigidity: see diagram
Rotation: 360°, infinite
Application temperature: +10 °C to +50 °C

Order No.	Size	Form	Version
21085-120	12	A	without motor
21085-1211	12	B	with stepper motor
21085-1221	12	C	with stepper motor with integrated positioning control

Positioning tables rotary

with coaxial electric drive

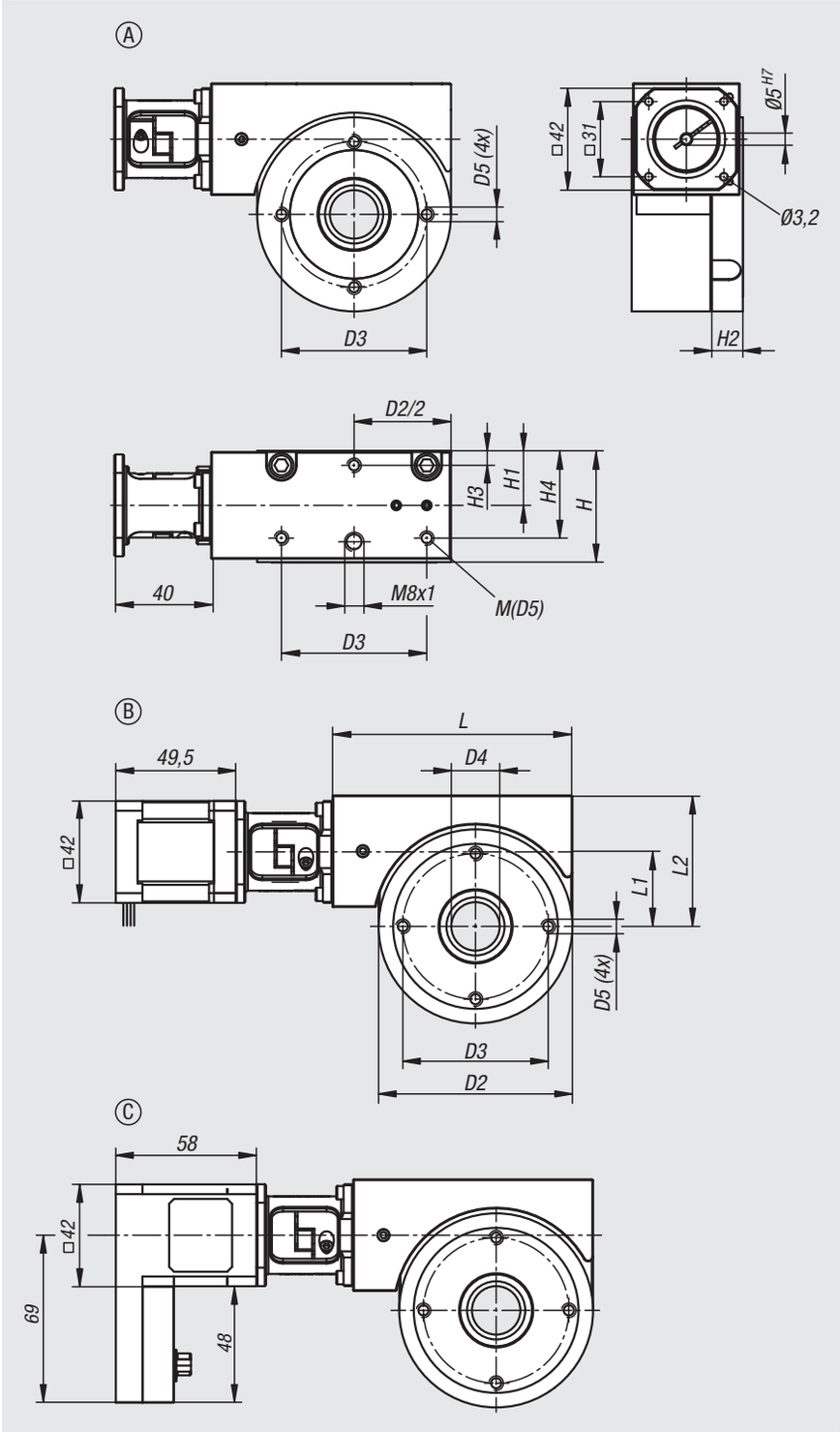

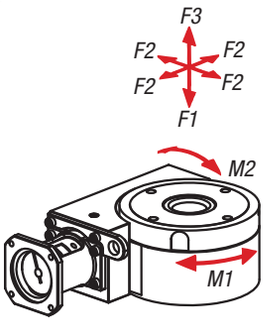

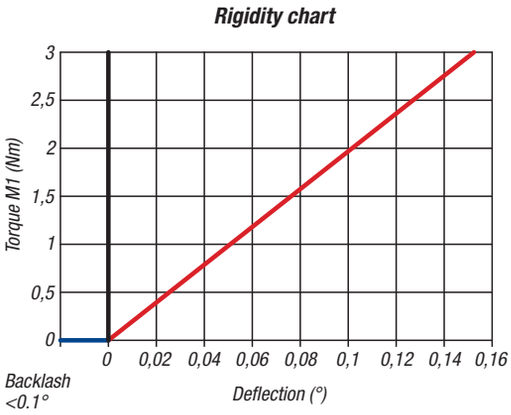

Specifications

Size	D2	D3	D4	D5	H	H1	H2	H3	H4	L	L1	L2
12	80	60	20	M6	46	22,5	13	6	36	99	31	54

Force tables

Size	F1 N	F2 N	F3 N	M1 Nm	M2 Nm
12	500	500	200	3	3

Notes

Stepper motor

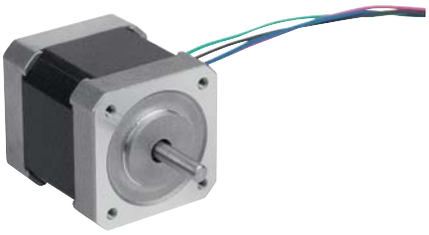

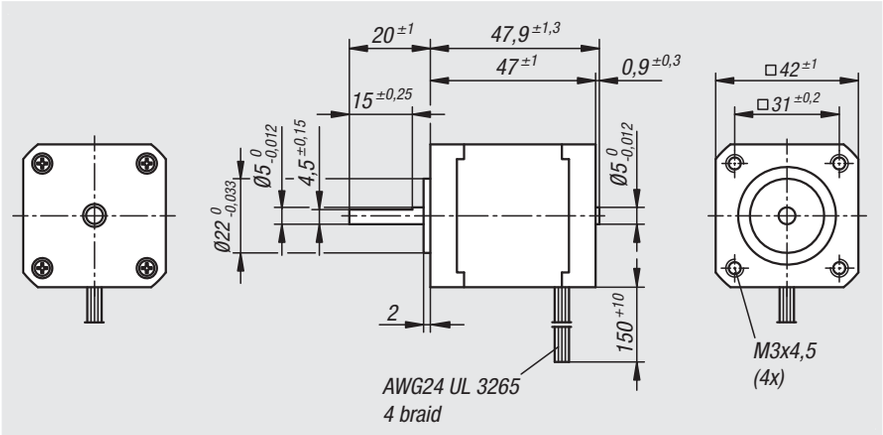

Version:
2-phase high-torque stepper motor in NEMA 17 (42 mm) size and 1.8° increment angle (full increment) with 4-wired connection line.

Sample order:
nlm 21086-1

Note:
The stepper motors deliver a high torque, high level of precision and convenient actuation. They function reliably in diverse ambient conditions. The stepper motors can be connected to conventional motor controllers via 4-wired connection cables.

Technical data:
Increment angle: 1.8°
Increments per rotation: 200
Nominal current/phase: 1.7 A
Nominal voltage: 5.6 V DC
Retaining torque: 0.4 Nm
Rotor moment of inertia: 0.068 kgcm²
Resistance/phase: 1.65 Ohm ±15%
Inductivity/phase: 2.8 mH ±20%
Application temperature: -10 °C to +50 °C

Torque characteristic curve

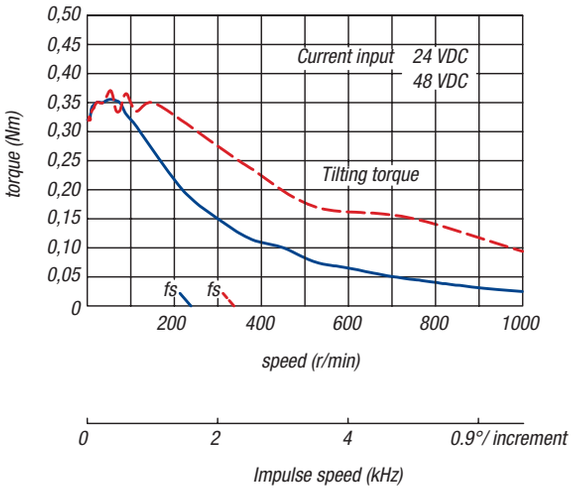

Connection diagram:

Pin	Colour	Phase	
1	black	A	
2	green	A\	
3	red	B	
4	blue	B\	

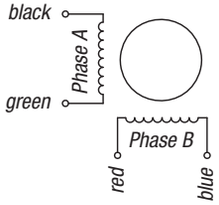

Order No.	Description
21086-1	stepper motor

Stepper motor

with integrated positioning control

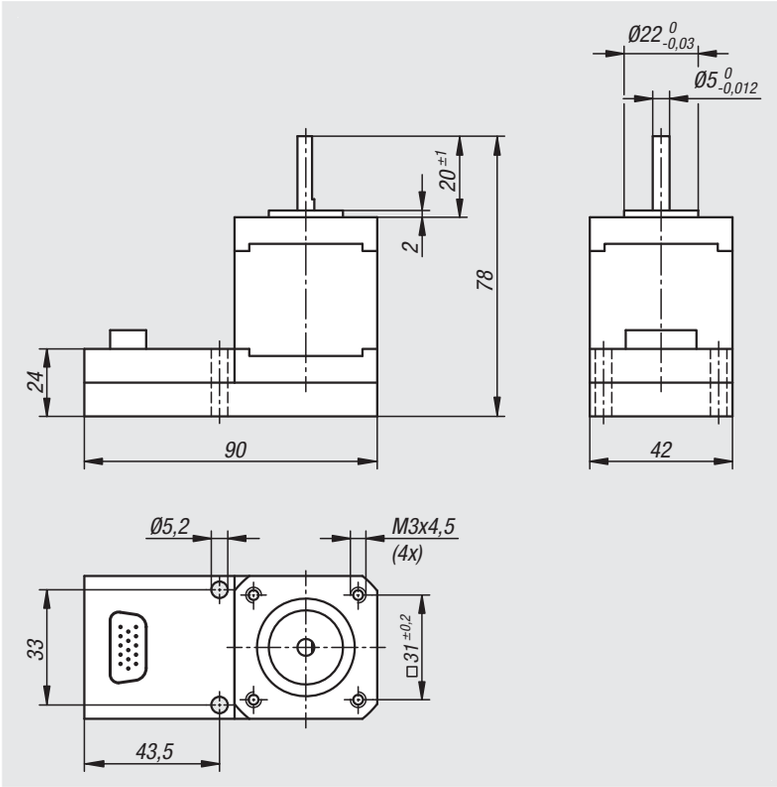

Version:
2-phase high-torque stepper motor in NEMA 17 (42 mm) size and 1.8° increment angle (full increment) with integrated position control.

Sample order:
nlm 21088-2

Note:
Stepper motor with integrated positioning control. A convenient unit consisting of stepper motor and intelligent controller. Reference travel is possible on a block with reduced electric current without proximity switch. Integrated rotational monitoring. Smooth running through dynamic switching of increment trip.

Actuation via single I/O interface, 31 position configurations and call-ups.

Control unit can be parametrised quickly and conveniently with the software. The software and manual for programming the positioning control are available as free of charge download.

Technical data:
Control voltage: +24 V to +36 V DC
Motor voltage: +24 V to +48 V DC
Interfaces: Digital I/O-BAC, frequency/direction
Retaining torque: up to 0.45 Nm
Rotor moment of inertia: 0.068 kgcm^2
Current drop: adjustable
Inputs: 6 (+24 V to +36 V DC)
Outputs: 2 (+24 V)
Application temperature: 0 °C to +50 °C

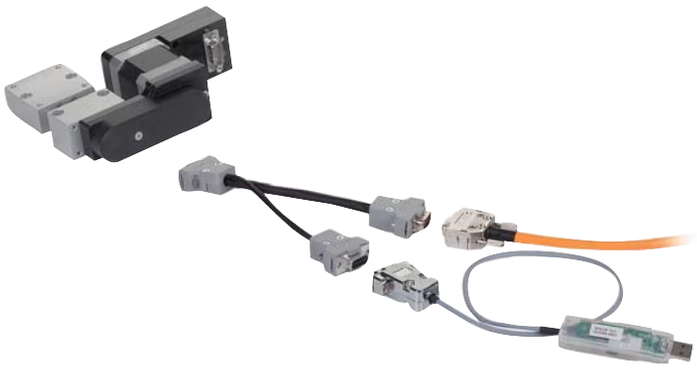

Stepper motor

with integrated positioning control

Pin	Digital I /O BAC
1	Motor supply +24 V to +48 V DC
2	Control voltage supply +24 V to +36 V DC
3	GND
4	Output "Ready" (RDY)
5	Output "Motor standing" (MOST)
6	Input "Start" or "Frequency"
7	Input I5, or direction, or reference point or analog value
8	Input 1 (binary 0)
9	Input 2 (binary 1)
10	Input 3 (binary 2)
11	Input 4 (binary 3)
12	n.c.
13	n.c.
14	n.c.
15	n.c.

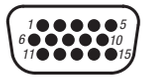

Torque characteristic curve

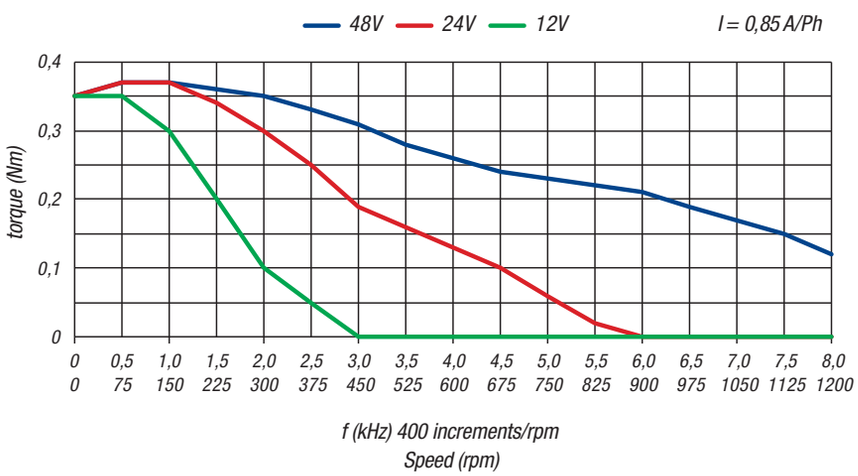

Order No.		Description	Application
21088-2		stepper motor	
21088-91		converter	USB to RS-232 (9-pin SUB-D connector). This USB stick transfers serial data with TTL level to the PC or notebook via the USB interface. Length ca. 500mm with 1.8 m USB extension cable.
21088-92		adapter	15-pin SUB-D socket to 15-pin SUB-D connector and 9-pin SUB-D socket, length approx. 170 mm
21088-93		connection cable	15-pin SUB-D HD socket, length 5 m. Drag-chain compatible

Notes

Mounting plates horizontal

Material:
Aluminium alloy.

Version:
anodized.

Sample order:
nlm 21090-081

Note:
The mounting plate is used for the horizontal mounting of the short or long positioning tables with electric drive. With slots for direct support of inductive proximity switch (20905-005). The proximity switch can be adjusted when the positioning unit is mounted. The threaded holes M4 are used to fasten the sensor holder 21093.

Can be combined with all other parts of the same size.

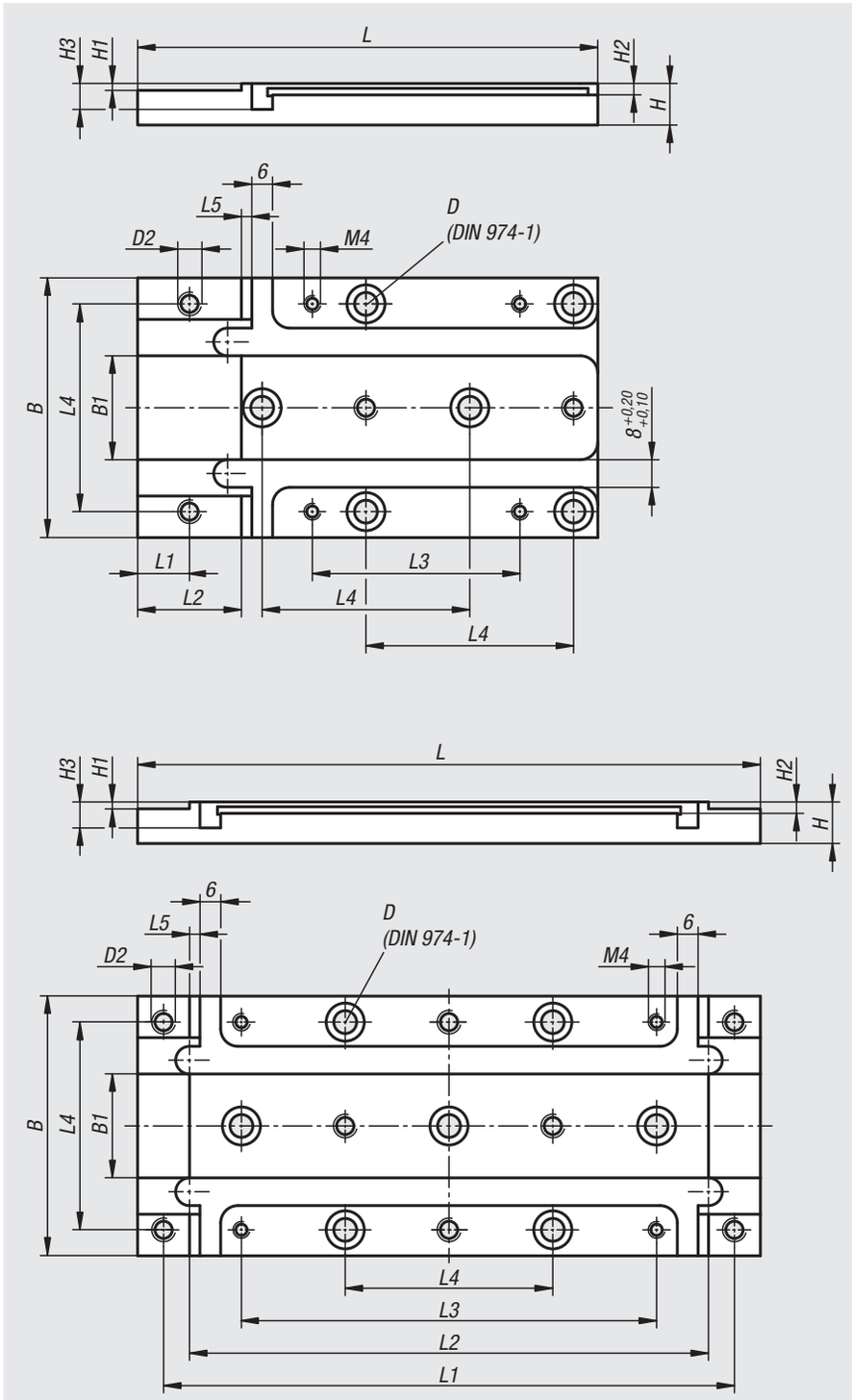

Order No.	Size	Version	B	B1	D	D2	H	H1	H2	H3	L	L1	L2	L3	L4	L5
21090-081	8	short	46	10	4	M4	10	2	2,3	6,5	82,5	9	15	40	36	1,5
21090-121	12	short	75	30	6	M6	12	2	3,3	7,5	133	15	30	60	60	3
21090-082	8	long	46	10	4	M4	10	2	2,3	6,5	120	108	96	72	36	1,5
21090-122	12	long	75	30	6	M6	12	2	3,3	7,5	180	165	150	120	60	3

Mounting plates vertical

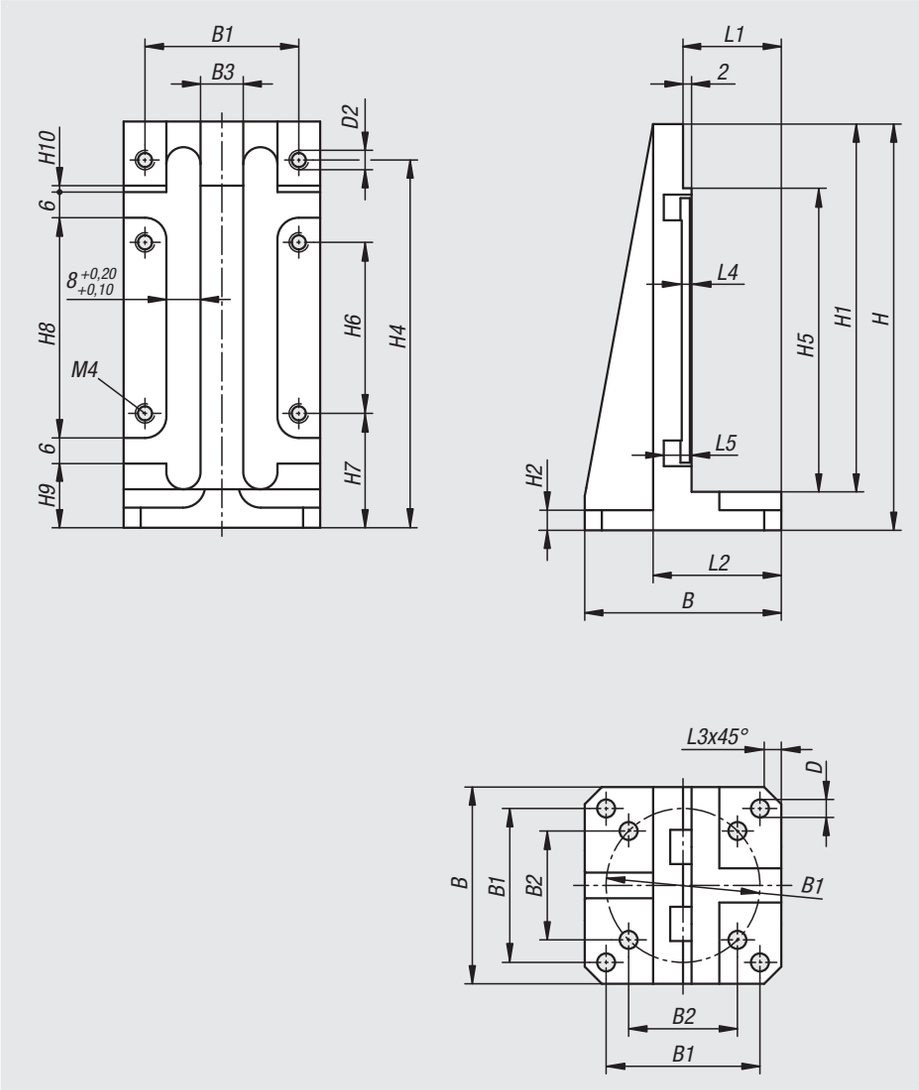

Material:
Aluminium alloy.

Version:
anodized.

Sample order:
nlm 21091-081

Note:
The mounting plate is used for the vertical mounting of the short or long positioning tables with electric drive. With slots for direct support of inductive proximity switch (20905-005). The proximity switch can be adjusted when the positioning unit is mounted. The threaded holes M4 are used to fasten the sensor holder 21093.

Can be combined with all other parts of the same size.

Order No.	Size	Version	B	B1	B2	B3	D	D1	D2	H	H1	H2	H4	H5	H6	H7	H8	H9	H10	L1	L2	L3	L4	L5
21091-081	8	short	46	36	25,5	10	4,2	4	M4	95	86	4,7	86	71	40	26,75	51,5	15	1,5	23	30	4	2,3	6,5
21091-121	12	short	75	60	42,4	30	6,4	6	M6	146	136	5,7	131	106	60	35,5	83	18	3	27	36	7	3,3	7,5

Mounting plates vertical

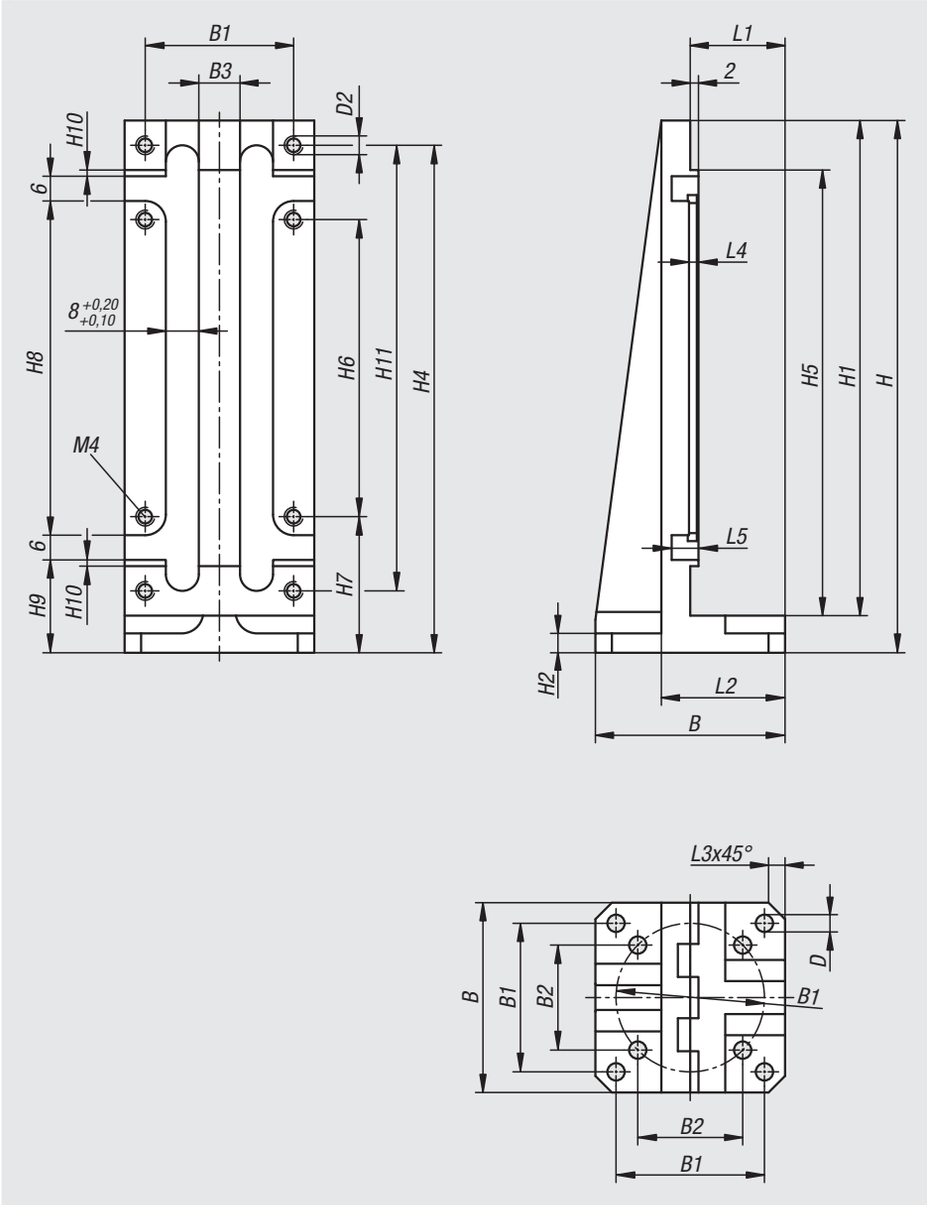

Order No.	Size	Version	B	B1	B2	B3	D	D1	D2	H	H1	H2	H4	H5	H6	H7	H8	H9	H10	H11	L1	L2	L3	L4	L5
21091-082	8	long	46	36	25,5	10	4,2	4	M4	129	120	4,7	123	108	72	33	81	22,9	1,5	108	23	30	4	2,3	6,5
21091-122	12	long	75	60	42,4	30	6,4	6	M6	192	180	5,7	184,5	177	120	42	132	30	3	165	27	36	7	3,3	7,5

Sensor holder

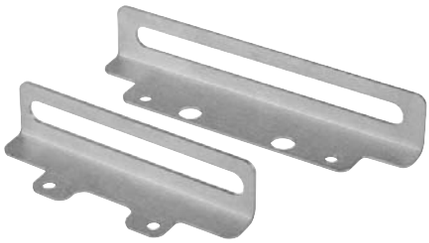

Material:
Aluminium alloy.

Version:
anodized.

Sample order:
nlm 21093-081

Note:
The sensor holder is used to fasten inductive proximity switches (e.g. 20910-050) to the mounting plate or on the customer's part.

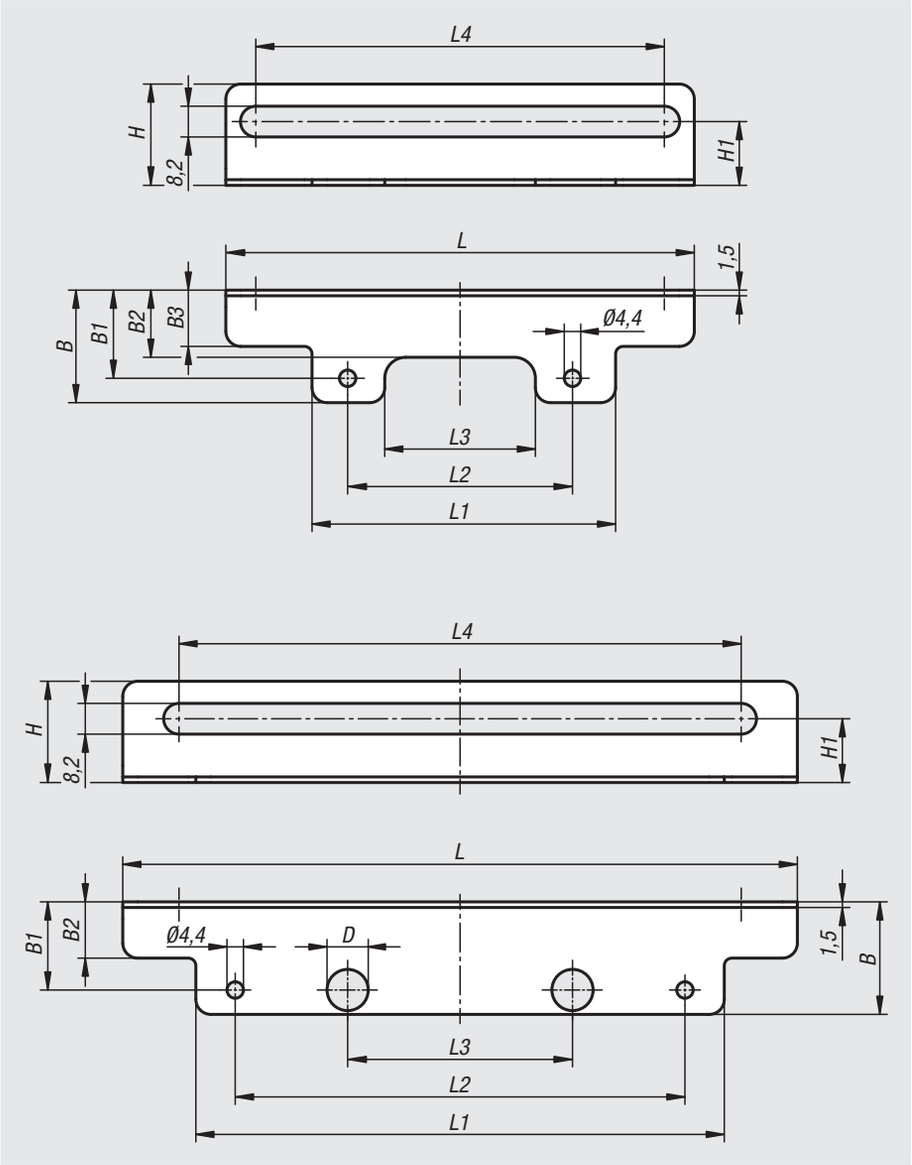

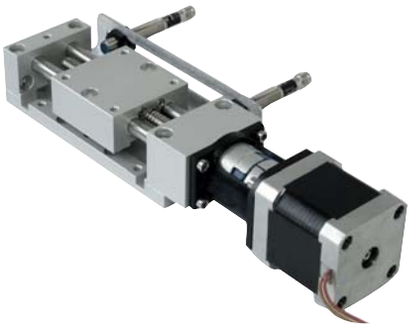

Order No.	Size	Version	B	B1	B2	B3	D	H	H1	L	L1	L2	L3	L4
21093-081	8	short	25	20	15,9	13,5	4,1	22	12	90	50	40	21,7	74
21093-121	12	short	30	23,5	17,9	15	5,6	27	17	125	81	60	40,2	109
21093-082	8	long	25	20	12,5	-	8	22	12	120	88	72	36	96
21093-122	12	long	30	23,5	15	-	11	27	17	180	141	120	60	150

Sensor holder

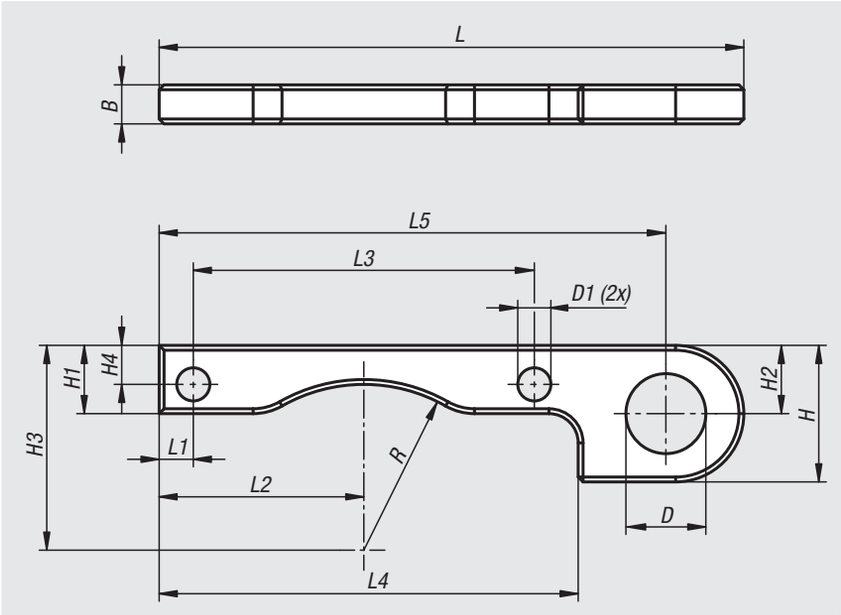

Material:
Aluminium alloy.

Version:
Black anodized

Sample order:
nlm 21094-12

Note:
The sensor holder is used to fasten inductive proximity switches (e.g. 20910-050) to the rotary positioning table with electric drive allowing the switch point to be positioned anywhere. The ring with the switch slot can be freely rotated counter to the rotary disc.

Order No.	Size	B	D	D1	H	H1	H2	H3	H4	L	L1	L2	L3	L4	L5	R
21094-12	12	4	8,2	3,2	14	7	7	21	4	60	3,5	21	35	43	52	17

Positioning tables short

Material:
Bearing block and carriage aluminium alloy, anodized.
Guide columns stainless steel, ground.
Spindle stainless steel, rolled thread.
Guide bearing maintenance-free.

Version:
Radial play on guide < 0.02 mm.
No axial backlash.
Spindle self-locking, with additional lock.

Sample order:
nlm 21100-04

Note:
Due to the practically play-free guides and absolutely play-free spindle, loosening or clamping of the spindle is not required during adjustments.
Scale graduation is 5 or 10 increments, 1 increment is equal to 0.1 mm travel.
Within the respective sizes, the positioning tables can be easily combined in the modular principle.

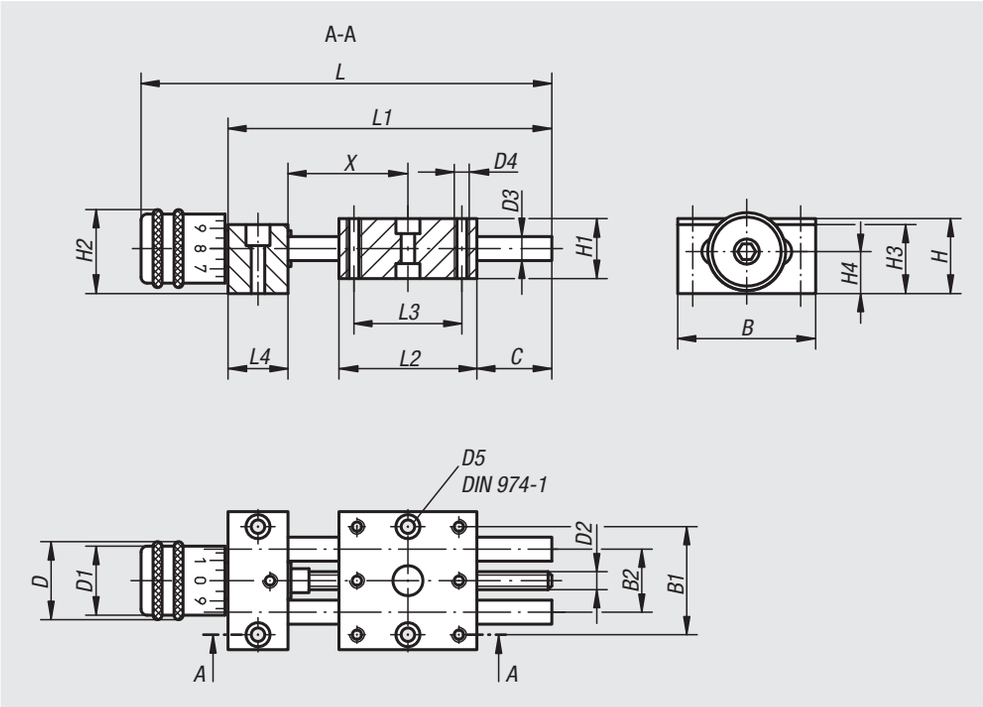

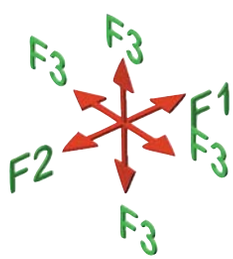

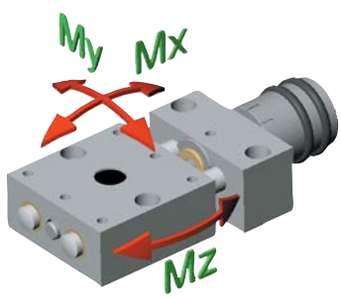

Order No.	B	B1	B2	C (travel)	D	D1	D2	D3	D4	D5	H	H1	H2	H3	H4	L	L1	L2	L3	L4	F1 N	F2 N	F3 N	Mx Nm	My Nm	Mz Nm
21100-04	29	22	12	11	13	11,5	M3x0,5	4	M3	3	14	12	14,5	13	8	64,5	50	29	22	10	70	70	X=28(10)	0,25	0,11	0,25
21100-08	46	36	21	14	26	23	M6x1	8	M4	4	24	20	27	23	14	108,5	80	46	36	20	200	200	X=39(50)	1,9	0,9	1,9
21100-12	75	60	38	25	26	23	M6x1	12	M6	6	28	25	29	27	15,5	162	133	75	60	30	300	300	X=58(100)	5,5	3	5,5

Positioning tables short

with position indicator

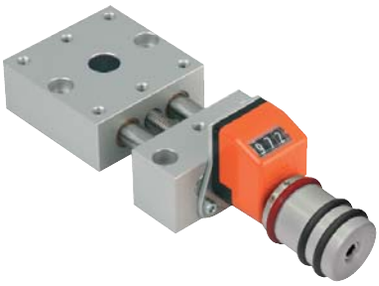

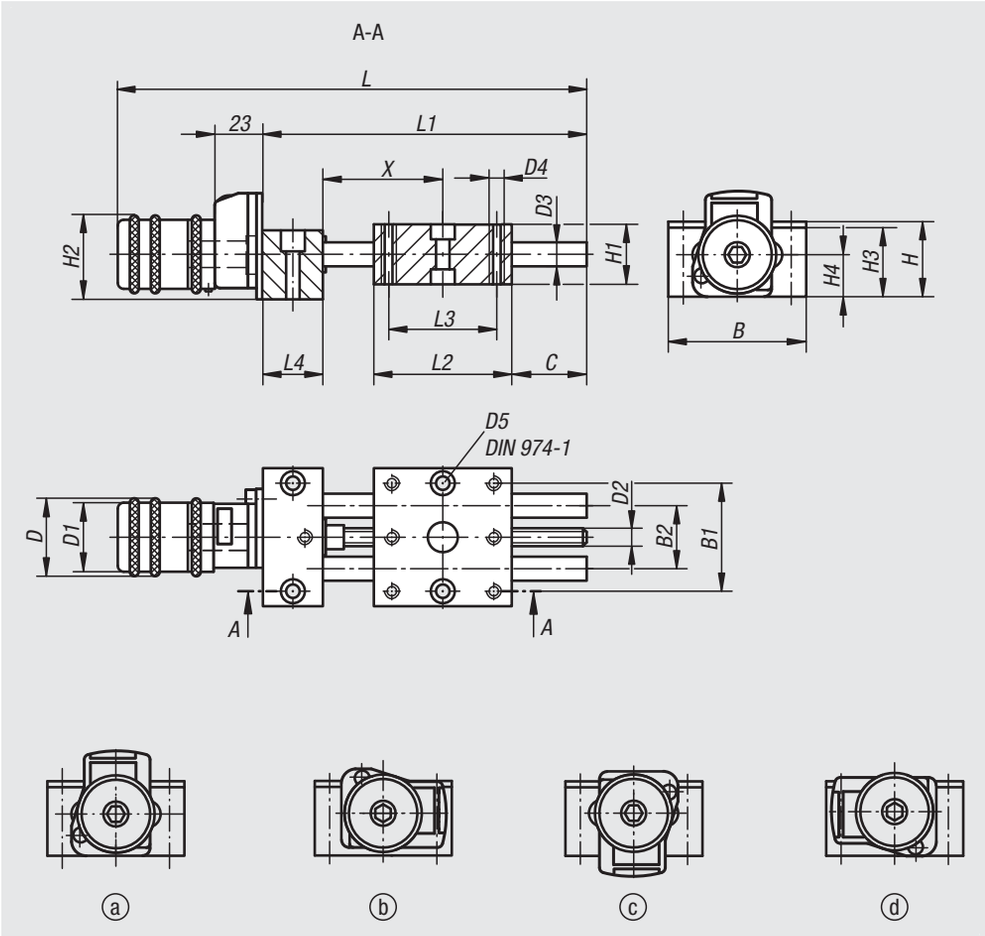

Material:
Bearing block and carriage aluminium alloy, anodized.
Guide columns stainless steel, ground.
Spindle stainless steel, rolled thread.
Guide bearing maintenance-free.
Position indicator plastic.

Version:
Radial play on guide < 0.02 mm.
No axial backlash.
Spindle self-locking, with additional lock.

Sample order:
nlm 21102-08

Note:
Due to the practically play-free guides and absolutely play-free spindle, loosening or clamping of the spindle is not required during adjustments.
Digital position indicators with 0.1 mm display accuracy, digits increase with right rotation.
The display value of the position indicator can be adjusted by turning the carrier ring. The mounted position of the position indicator can be set in 4 positions with a screw.
Within the respective sizes, the positioning tables can be easily combined in the modular principle.

Drawing reference:
Assembly position of position indicator:
a) top (standard)
b) right
c) bottom
d) left

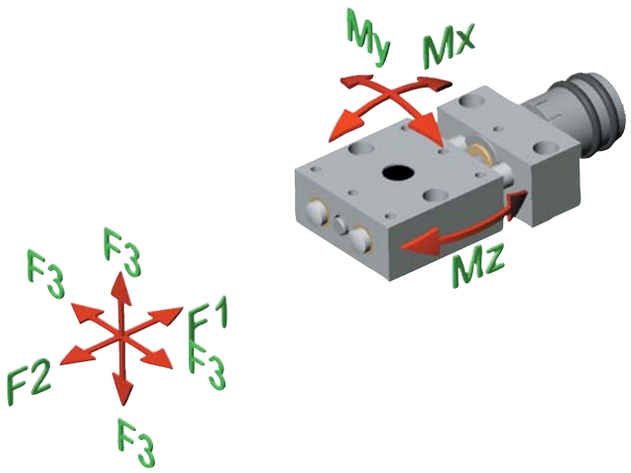

Order No.	B	B1	B2	C (travel)	D	D1	D2	D3	D4	D5	H	H1	H2	H3	H4	L	L1	L2	L3	L4	F1 N	F2 N	F3 N	Mx Nm	My Nm	Mz Nm
21102-08	46	36	21	14	26	23	M6x1	8	M4	4	24	20	27	23	14	135	80	46	36	20	200	200	X=39(50)	1,9	0,9	1,9
21102-12	75	60	38	25	26	23	M6x1	12	M6	6	28	25	29	27	15,5	187,5	133	75	60	30	300	300	X=58(100)	5,5	3	5,5

Positioning tables long

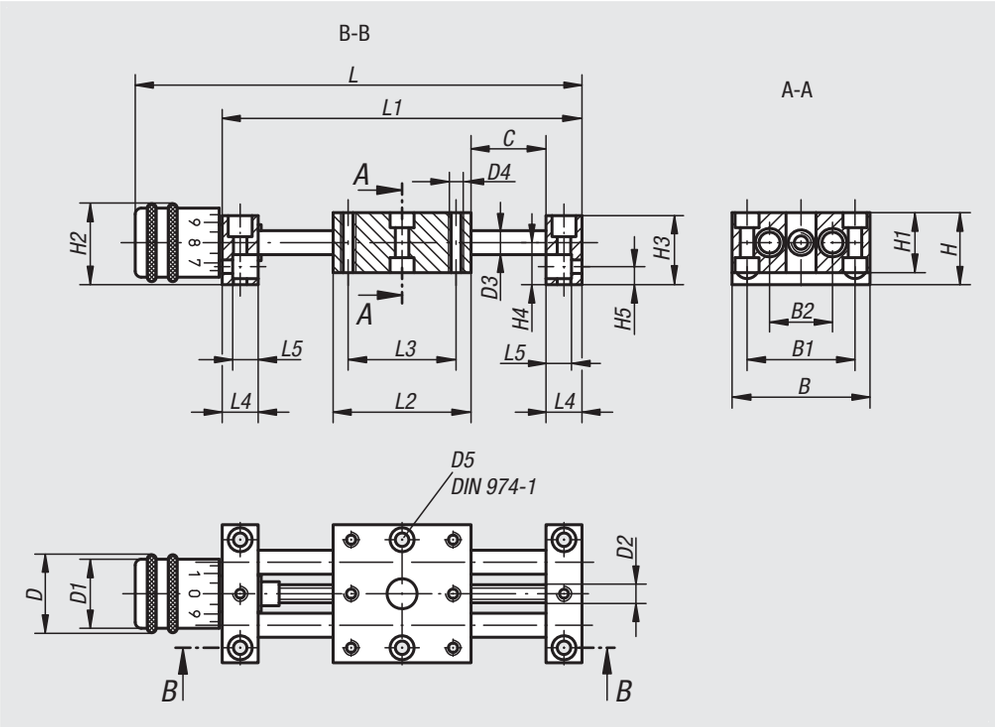

Material:
Bearing block and carriage aluminium alloy, anodized.
Guide columns stainless steel, ground.
Spindle stainless steel, rolled thread.
Guide bearing maintenance-free.

Version:
Radial play on guide < 0.02 mm.
No axial backlash.
Spindle self-locking, with additional lock.

Sample order:
nlm 21120-04

Note:
Due to the practically play-free guides and absolutely play-free spindle, loosening or clamping of the spindle is not required during adjustments.
Scale graduation is 5 or 10 increments, 1 increment is equal to 0.1 mm travel.
Within the respective sizes, the positioning tables can be easily combined in the modular principle.

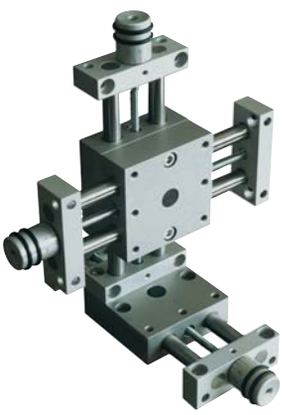

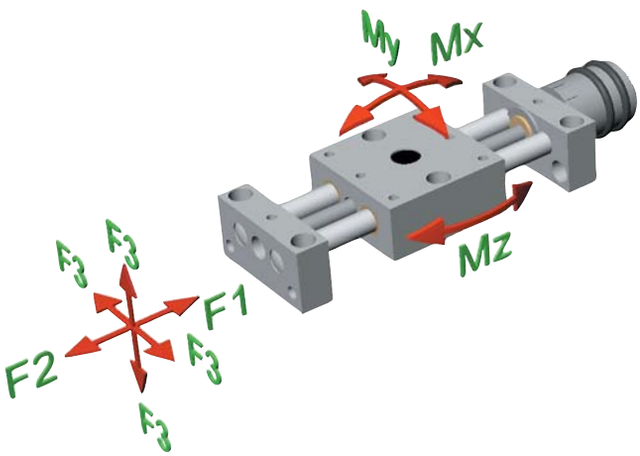

Order No.	B	B1	B2	C (travel)	D	D1	D2	D3	D4	D5	H	H1	H2	H3	H4	H5	L	L1	L2	L3	L4	L5	F1 N	F2 N	F3 N	Mx Nm	My Nm	Mz Nm
21120-04	29	22	12	23	13	12	M3x0,5	4	M3	3	14	12	14,5	13	8	4	84,5	70	29	22	8	6	70	70	70	0,77	0,77	0,77
21120-08	46	36	21	48	26	23	M6x1	8	M4	4	24	20	27	23	14	6	148,5	120	46	36	12	8,5	200	200	200	3,6	3,6	3,6
21120-12	75	60	38	73	26	23	M6x1	12	M6	6	28	25	28,5	27	15,5	7	209	180	75	60	15	11	300	300	300	18	18	18
21120-25	150	130	90	86	52	46	M16x2	25	M10	10	53	50	54	52	28	13	347	290	150	130	25	18	1000	1000	1000	65	65	65

Positioning tables long

with position indicator

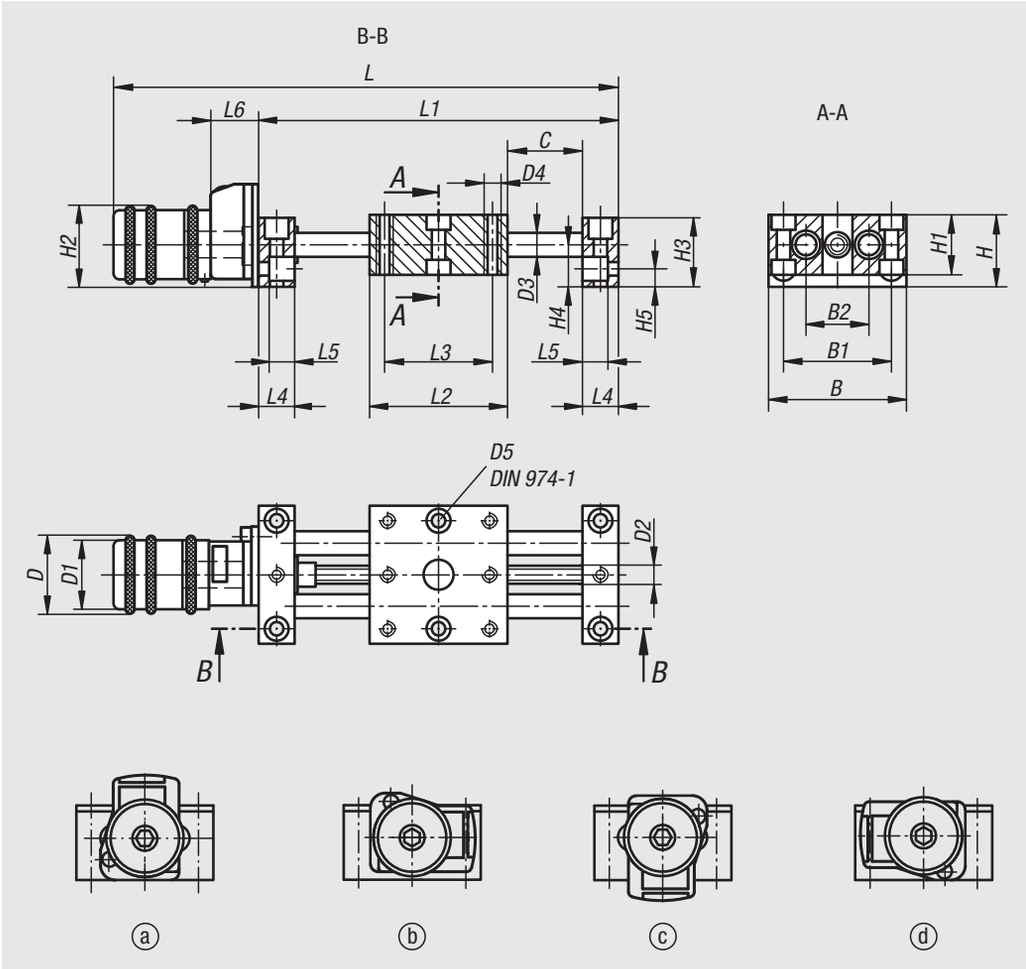

Material:
Bearing block and carriage aluminium alloy, anodized.
Guide columns stainless steel, ground.
Spindle stainless steel, rolled thread.
Guide bearing maintenance-free.
Position indicator plastic.

Version:
Radial play on guide < 0.02 mm.
No axial backlash.
Spindle self-locking, with additional lock.

Sample order:
nlm 21122-08

Note:
Due to the practically play-free guides and absolutely play-free spindle, loosening or clamping of the spindle is not required during adjustments.
Digital position indicators with 0.1 mm display accuracy, digits increase with right rotation. The display value of the position indicator can be adjusted by turning the carrier ring. The mounted position of the position indicator can be set in 4 positions with a screw. Size 25 can be mounted in 3 positions (up, right and left).
Within the respective sizes, the positioning tables can be easily combined in the modular principle.

Drawing reference:
Assembly position of position indicator:
a) top (standard)
b) right
c) bottom
d) left

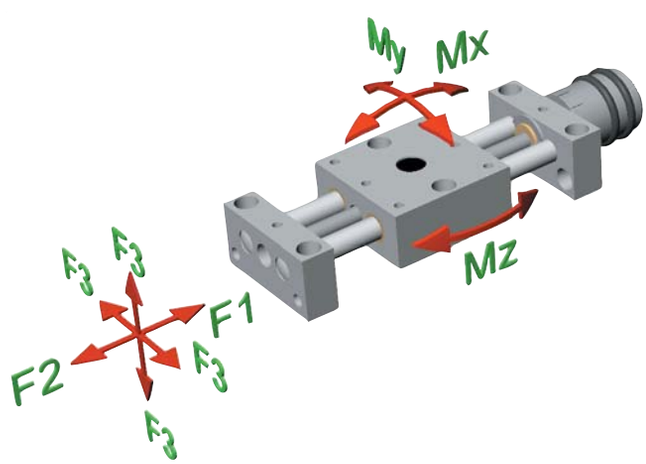

Order No.	B	B1	B2	C (travel)	D	D1	D2	D3	D4	D5	H	H1	H2	H3	H4	H5	L	L1	L2	L3	L4	L5	L6	F1 N	F2 N	F3 N	Mx Nm	My Nm	Mz Nm
21122-08	46	36	21	48	26	23	M6x1	8	M4	4	24	20	27	23	14	6	175	120	46	36	12	8,5	23	200	200	200	3,6	3,6	3,6
21122-12	75	60	38	73	26	23	M6x1	12	M6	6	28	25	28,5	27	15,5	7	235	180	75	60	15	11	23	300	300	300	18	18	18
21122-25	150	130	90	86	52	46	M16x2	25	M10	10	53	50	54	52	28	13	388	290	150	130	25	18	36	1000	1000	1000	65	65	18

Cross tables short

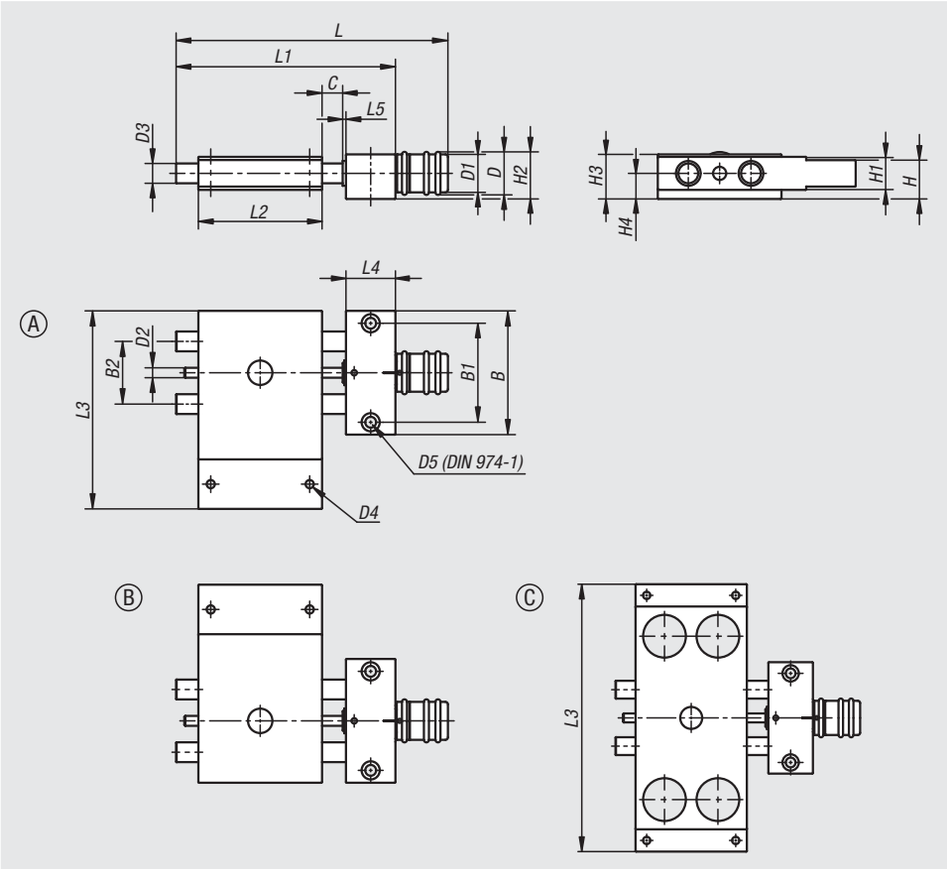

Material:
Bearing block and carriage aluminium alloy, anodized.
Guide columns stainless steel, ground.
Spindle stainless steel, rolled thread.
Guide bearing maintenance-free.

Version:
Radial play on guide < 0.02 mm.
No axial backlash.
Spindle self-locking, with additional lock.

Sample order:
nlm 21130-104

Note:
The almost play-free guides and absolutely play-free spindle allow for adjustment without the need to loosen or clamp the spindle.
The scale graduation is in 5 or 10 increments; 1 increment corresponds to 0.1 mm of travel.
The cross stage can be easily combined with positioning stages, vertical stages and other accessories of respective size by the modular principle.

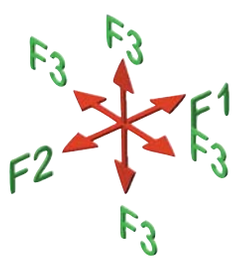

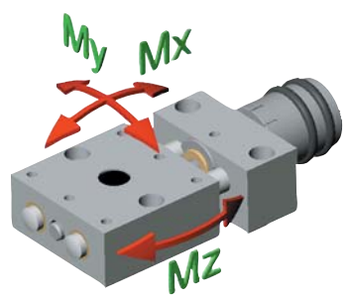

Order No.	Form	B	B1	B2	C (travel)	D	D1	D2	D3	D4	D5	H	H1	H2	H3	H4	L	L1	L2	L3	L4	L5	F1 N	F2 N	F3 N	Mx Nm	My Nm	Mz Nm
21130-104	A	29	22	12	11	13	11,5	M3x0,5	4	M3	3	11	8	14,5	13	8	64,5	50	29	46	10	1,5	70	70	X=28(10)	0,25	0,11	0,25
21130-108	A	46	36	21	14	26	23	M6x1	8	M4	4	18	14	27	23	14	108,5	80	46	75	20	2	200	200	X=39(50)	1,9	0,9	1,9
21130-112	A	75	60	38	25	26	23	M6x1	12	M6	6	23,5	20	29	27	15,5	162	133	75	120	30	2	300	300	X=58(100)	5,5	3	5,5
21130-204	B	29	22	12	11	13	11,5	M3x0,5	4	M3	3	11	8	14,5	13	8	64,5	50	29	46	10	1,5	70	70	X=28(10)	0,25	0,11	0,25
21130-208	B	46	36	21	14	26	23	M6x1	8	M4	4	18	14	27	23	14	108,5	80	46	75	20	2	200	200	X=39(50)	1,9	0,9	1,9
21130-212	B	75	60	38	25	26	23	M6x1	12	M6	6	23,5	20	29	27	15,5	162	133	75	120	30	2	300	300	X=58(100)	5,5	3	5,5
21130-304	C	29	22	12	11	13	11,5	M3x0,5	4	M3	3	11	8	14,5	13	8	64,5	50	29	70	10	1,5	70	70	X=28(10)	0,25	0,11	0,25
21130-308	C	46	36	21	14	26	23	M6x1	8	M4	4	18	14	27	23	14	108,5	80	46	120	20	2	200	200	X=39(50)	1,9	0,9	1,9
21130-312	C	75	60	38	25	26	23	M6x1	12	M6	6	23,5	20	29	27	15,5	162	133	75	180	30	2	300	300	X=58(100)	5,5	3	5,5

Cross tables short

with position indicators

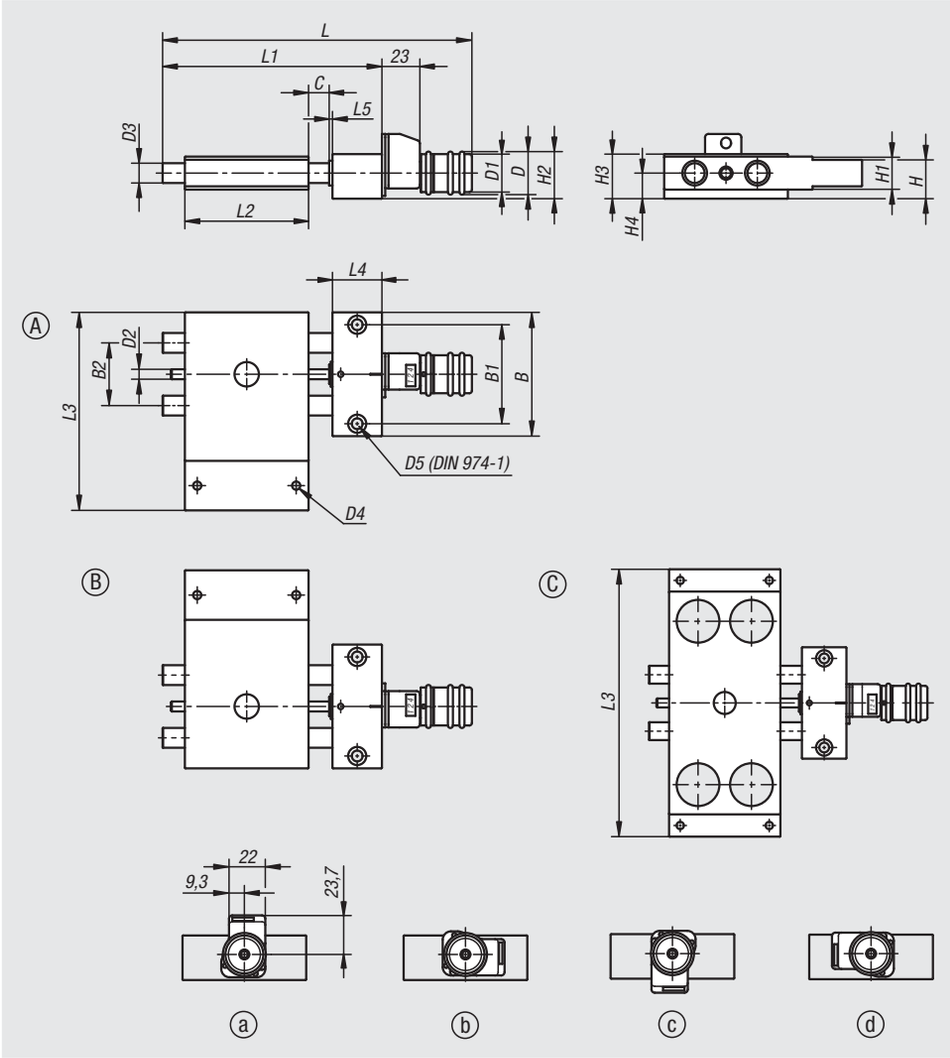

Material:
Bearing block and carriage aluminium alloy, anodized.
Guide columns stainless steel, ground.
Spindle stainless steel, rolled thread.
Guide bearing maintenance-free.
Position indicator plastic.

Version:
Radial play on guide < 0.02 mm.
No axial backlash.
Spindle self-locking, with additional lock.

Sample order:
nlm 21132-108

Note:
The almost play-free guides and absolutely play-free spindle allow for adjustment without the need to loosen or clamp the spindle.
Digital position indicator with 0.1 mm indicator accuracy, digits increase by clockwise rotation. The display value is set by turning the outer ring. The indicator can be mounted in 4 positions using a screw.
The cross stage can be easily combined with positioning stages, vertical stages and other accessories of respective size by the modular principle.

Drawing reference:
Assembly position of position indicator:
a) top (standard)
b) right
c) bottom
d) left

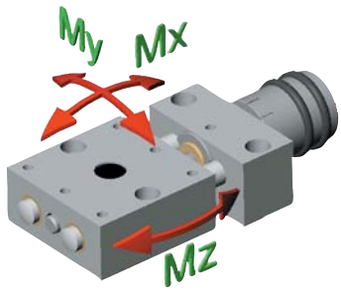

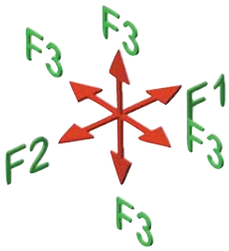

Order No.	Form	B	B1	B2	C (travel)	D	D1	D2	D3	D4	D5	H	H1	H2	H3	H4	L	L1	L2	L3	L4	L5	F1 N	F2 N	F3 N	Mx Nm	My Nm	Mz Nm
21132-108	A	46	36	21	14	26	23	M6x1	8	M4	4	18	14	27	23	14	134,5	80	46	75	20	2	200	200	X=39(50)	1,9	0,9	1,9
21132-112	A	75	60	38	25	26	23	M6x1	12	M6	6	23,5	20	29	27	15,5	187,5	133	75	120	30	2	300	300	X=58(100)	5,5	3	5,5
21132-208	B	46	36	21	14	26	23	M6x1	8	M4	4	18	14	27	23	14	134,5	80	46	75	20	2	200	200	X=39(50)	1,9	0,9	1,9
21132-212	B	75	60	38	25	26	23	M6x1	12	M6	6	23,5	20	29	27	15,5	187,5	133	75	120	30	2	300	300	X=58(100)	5,5	3	5,5
21132-308	C	46	36	21	14	26	23	M6x1	8	M4	4	18	14	27	23	14	134,5	80	46	120	20	2	200	200	X=39(50)	1,9	0,9	1,9
21132-312	C	75	60	38	25	26	23	M6x1	12	M6	6	23,5	20	29	27	15,5	187,5	133	75	180	30	2	300	300	X=58(100)	5,5	3	5,5

Cross tables long

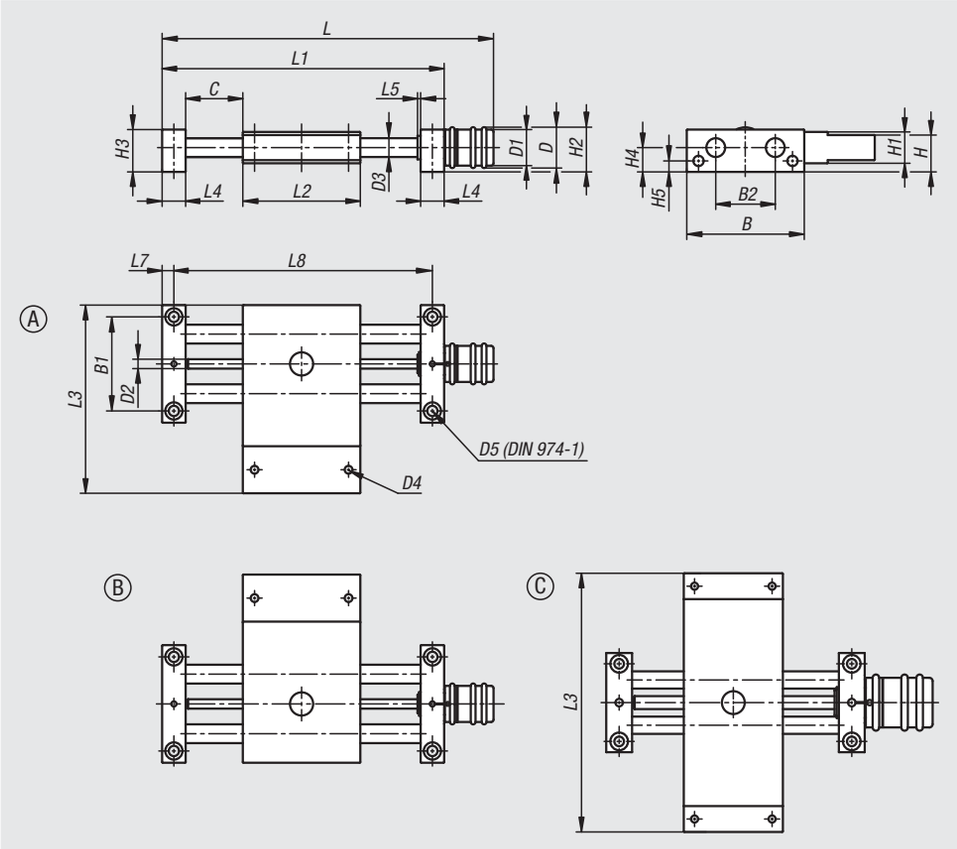

Material:
Bearing block and carriage aluminium alloy, anodized.
Guide columns stainless steel, ground.
Spindle stainless steel, rolled thread.
Guide bearing maintenance-free.

Version:
Radial play on guide < 0.02 mm.
No axial backlash.
Spindle self-locking, with additional lock.

Sample order:
nlm 21134-104

Note:
The almost play-free guides and absolutely play-free spindle allow for adjustment without the need to loosen or clamp the spindle.
The scale graduation is in 5 or 10 increments; 1 increment corresponds to 0.1 mm of travel.
The cross stage can be easily combined with positioning stages, vertical stages and other accessories of respective size by the modular principle.

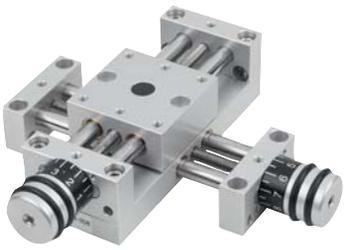

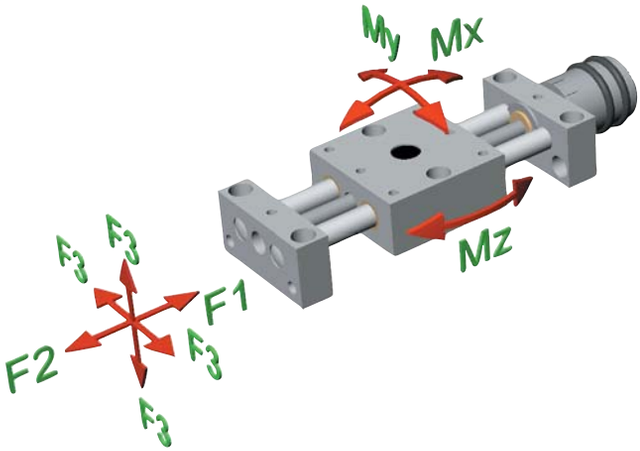

Order No.	Form	B	B1	B2	C (travel)	D	D1	D2	D3	D4	D5	H	H1	H2	H3	H4	H5	L	L1	L2	L3	L4	L5	L7	L8	F1 N	F2 N	F3 N	Mx Nm	My Nm	Mz Nm
21134-104	A	29	22	12	23	13	11,5	M3x0,5	4	M3	3	11	8	14,5	13	8	4	84,5	70	29	46	8	1,5	4	62	70	70	70	0,77	0,77	0,77
21134-108	A	46	36	21	48	26	23	M6x1	8	M4	4	18	14	27	23	14	6	148,5	120	46	75	12	2	6	108	200	200	200	3,6	3,6	3,6
21134-112	A	75	60	38	73	26	23	M6x1	12	M6	6	23,5	20	29	27	15,5	7	209	180	75	120	15	2	7,5	165	300	300	300	18	18	18
21134-204	B	29	22	12	23	13	11,5	M3x0,5	4	M3	3	11	8	14,5	13	8	4	84,5	70	29	46	8	1,5	4	62	70	70	70	0,77	0,77	0,77
21134-208	B	46	36	21	48	26	23	M6x1	8	M4	4	18	14	27	23	14	6	148,5	120	46	75	12	2	6	108	200	200	200	3,6	3,6	3,6
21134-212	B	75	60	38	73	26	23	M6x1	12	M6	6	23,5	20	29	27	15,5	7	209	180	75	120	15	2	7,5	165	300	300	300	18	18	18
21134-304	C	29	22	12	23	13	11,5	M3x0,5	4	M3	3	11	8	14,5	13	8	4	84,5	70	29	70	8	1,5	4	62	70	70	70	0,77	0,77	0,77
21134-308	C	46	36	21	48	26	23	M6x1	8	M4	4	18	14	27	23	14	6	148,5	120	46	120	12	2	6	108	200	200	200	3,6	3,6	3,6
21134-312	C	75	60	38	73	26	23	M6x1	12	M6	6	23,5	20	29	27	15,5	7	209	180	75	180	15	2	7,5	165	300	300	300	18	18	18

Cross tables long

with position indicators

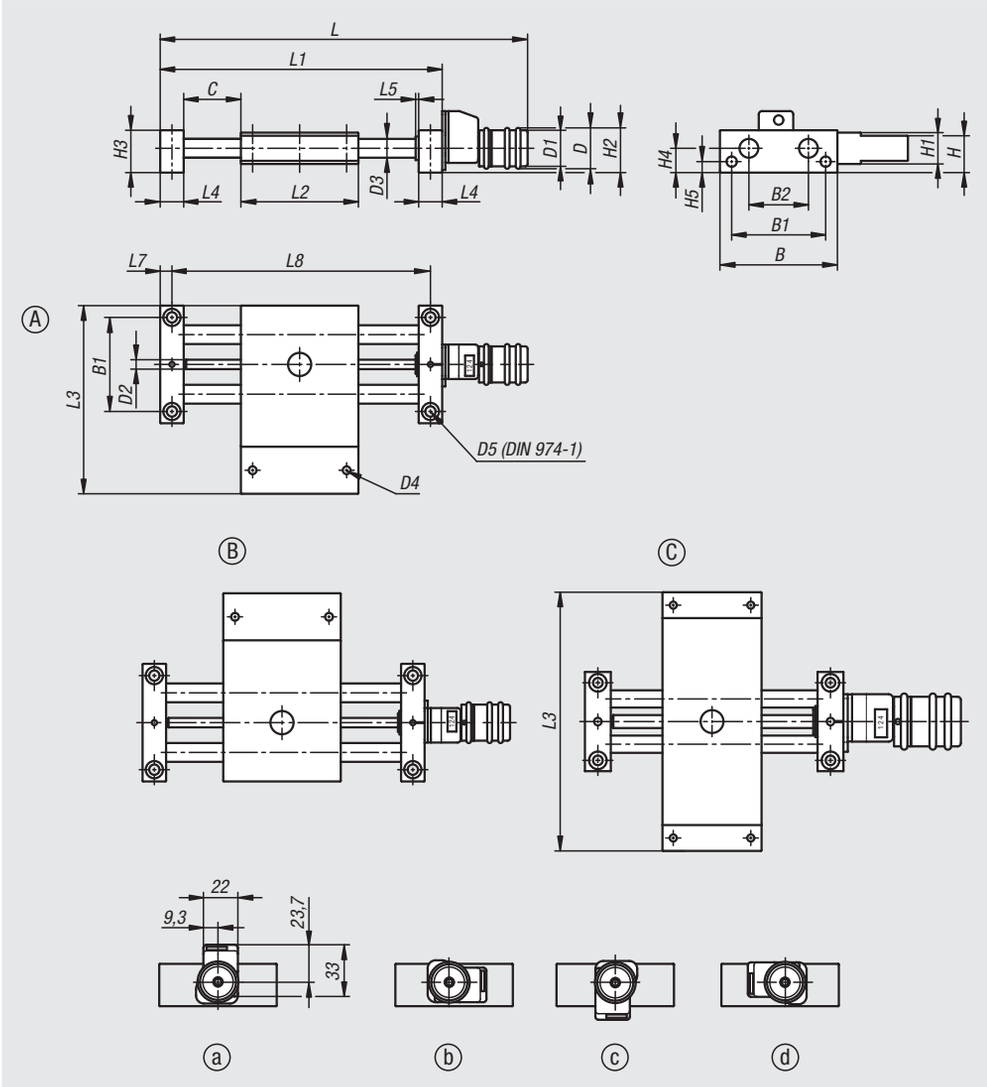

Material:
Bearing block and carriage aluminium alloy, anodized.
Guide columns stainless steel, ground.
Spindle stainless steel, rolled thread.
Guide bearing maintenance-free.
Position indicator plastic.

Version:
Radial play on guide < 0.02 mm.
No axial backlash.
Spindle self-locking, with additional lock.

Sample order:
nlm 21136-108

Note:
The almost play-free guides and absolutely play-free spindle allow for adjustment without the need to loosen or clamp the spindle.
Digital position indicator with 0.1 mm indicator accuracy, digits increase by clockwise rotation.
The display value is set by turning the outer ring. The indicator can be mounted in 4 positions using a screw.
The cross stage can be easily combined with positioning stages, vertical stages and other accessories of respective size by the modular principle.

Drawing reference:
Assembly position of position indicator:
a) top (standard)
b) right
c) bottom
d) left

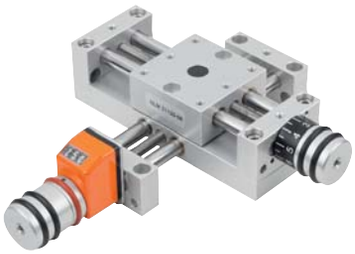

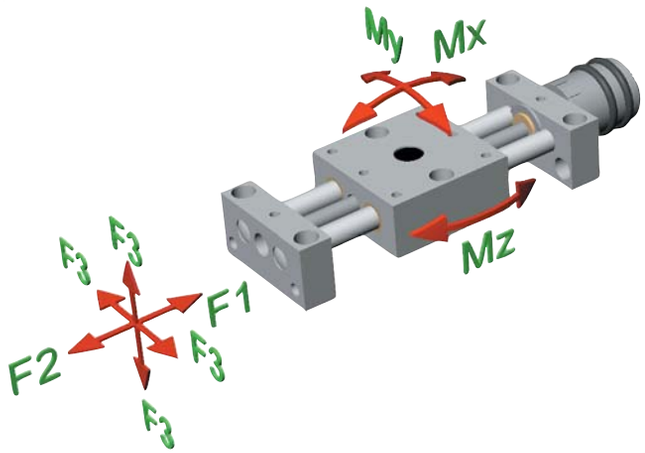

Order No.	Form	B	B1	B2	C (travel)	D	D1	D2	D3	D4	D5	H	H1	H2	H3	H4	H5	L	L1	L2	L3	L4	L5	L7	L8	F1 N	F2 N	F3 N	Mx Nm	My Nm	Mz Nm
21136-108	A	46	36	21	48	26	23	M6x1	8	M4	4	18	14	27	23	14	6	174,5	120	46	75	12	2	6	108	200	200	200	3,6	3,6	3,6
21136-112	A	75	60	38	73	26	23	M6x1	12	M6	6	23,5	20	29	27	15,5	7	235	180	75	120	15	2	7,5	165	300	300	300	18	18	18
21136-208	B	46	36	21	48	26	23	M6x1	8	M4	4	18	14	27	23	14	6	174,5	120	46	75	12	2	6	108	200	200	200	3,6	3,6	3,6
21136-212	B	75	60	38	73	26	23	M6x1	12	M6	6	23,5	20	29	27	15,5	7	235	180	75	120	15	2	7,5	165	300	300	300	18	18	18
21136-308	C	46	36	21	48	26	23	M6x1	8	M4	4	18	14	27	23	14	6	174,5	120	46	120	12	2	6	108	200	200	200	3,6	3,6	3,6
21136-312	C	75	60	38	73	26	23	M6x1	12	M6	6	23,5	20	29	27	15,5	7	235	180	75	180	15	2	7,5	165	300	300	300	18	18	18

Vertical bracket

short

Material:
Aluminium alloy.

Version:
anodized.

Sample order:
nlm 21138-04

Note:
The vertical bracket is mounted vertically to the mounting surface.
Can be combined with positioning stages, cross stages, vertical stages and all other components of the same size.

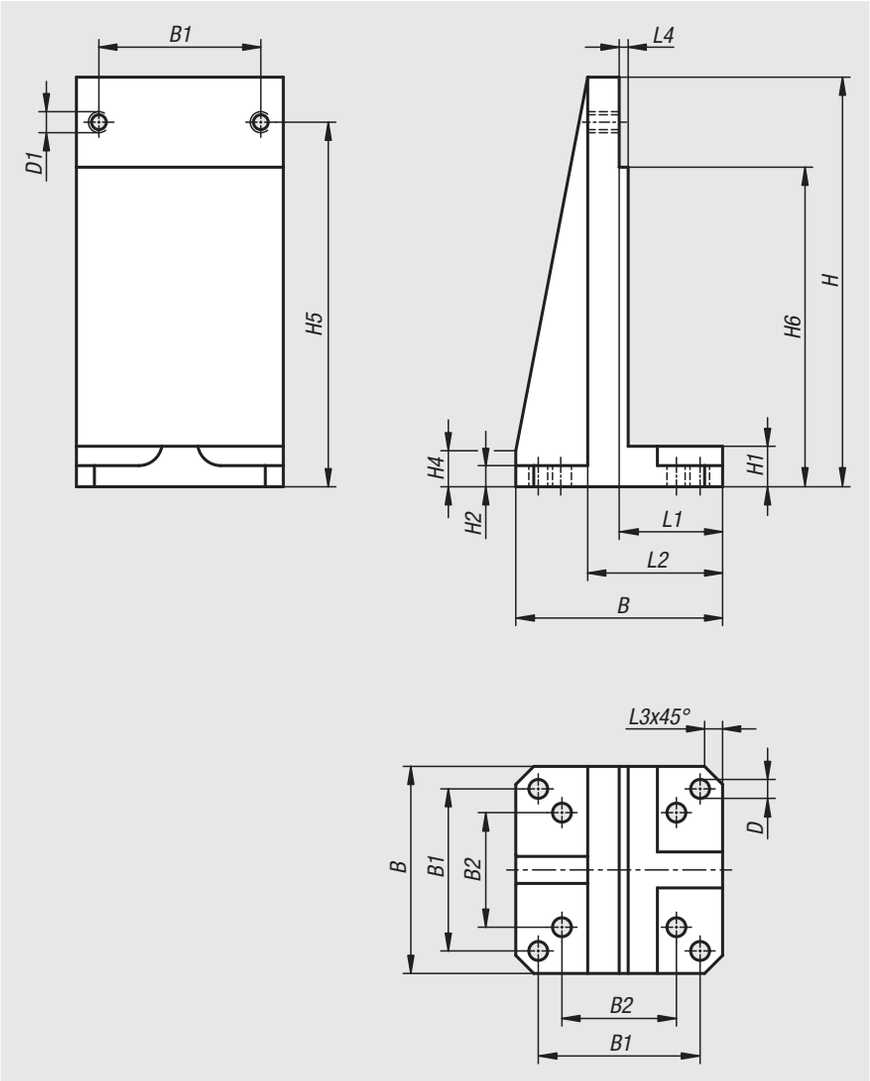

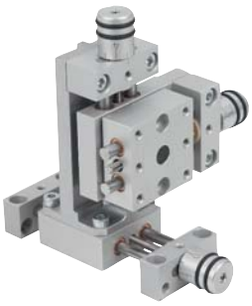

Order No.	Size	B	B1	B2	D	D1	H	H1	H2	H4	H5	H6	L1	L2	L3	L4
21138-04	4	29	22	15,56	3,2	M3	58	6	2,8	6	53	48	13	18	3	1
21138-08	8	46	36	25,46	4,2	M4	91	9	4,7	8	81	71	23	30	4	2
21138-12	12	75	60	42,43	6,4	M6	146	12	5,7	8	131	116	27	36	7	2

Vertical bracket

long

Material:
Aluminium alloy.

Version:
anodized.

Sample order:
nlm 21139-04

Note:
The vertical bracket is mounted vertically to the mounting surface.
Can be combined with positioning stages, cross stages, vertical stages and all other components of the same size.

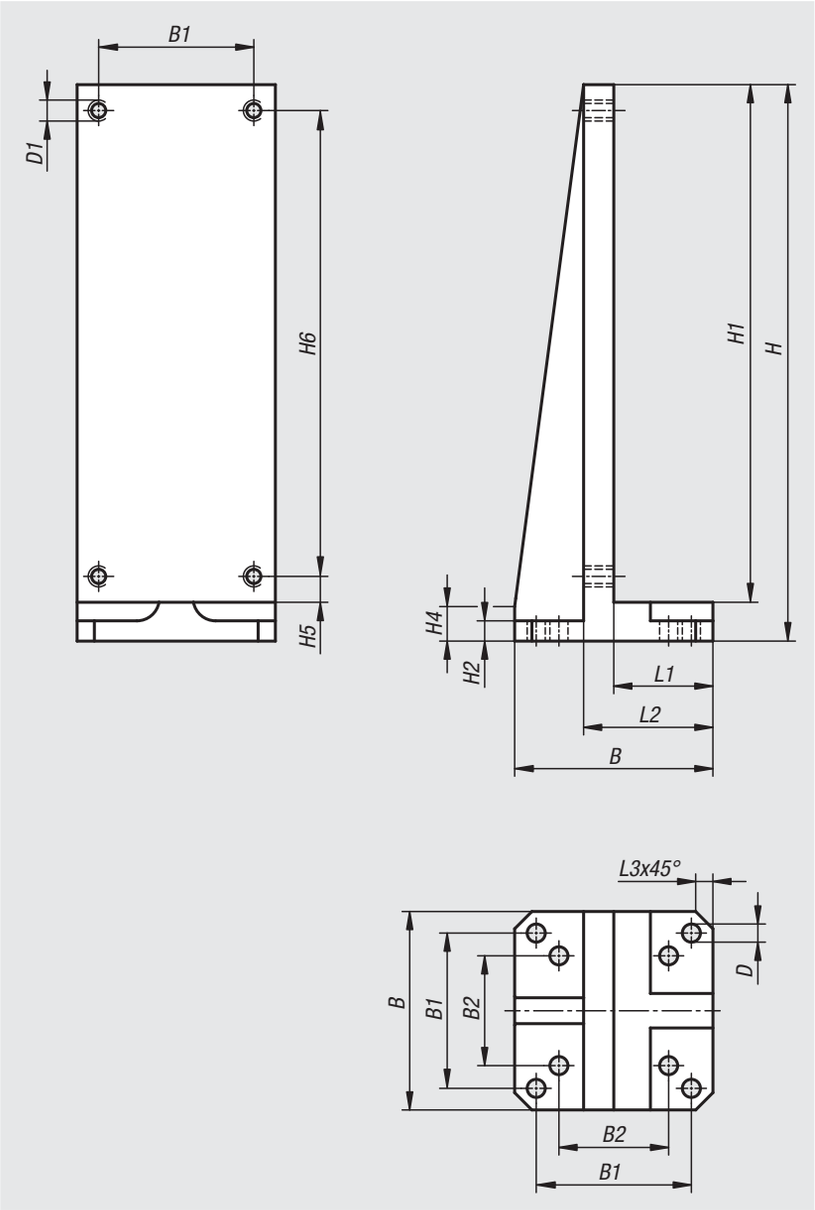

Order No.	Size	B	B1	B2	D	D1	H	H1	H2	H4	H5	H6	L1	L2	L3
21139-04	4	29	22	15,56	3,2	M3	76	70	2,8	6	4	62	13	18	3
21139-08	8	46	36	25,46	4,2	M4	129	120	4,7	8	6	108	23	30	4
21139-12	12	75	60	42,43	6,4	M6	192	180	5,7	8	7,5	165	27	36	7

Lift tables

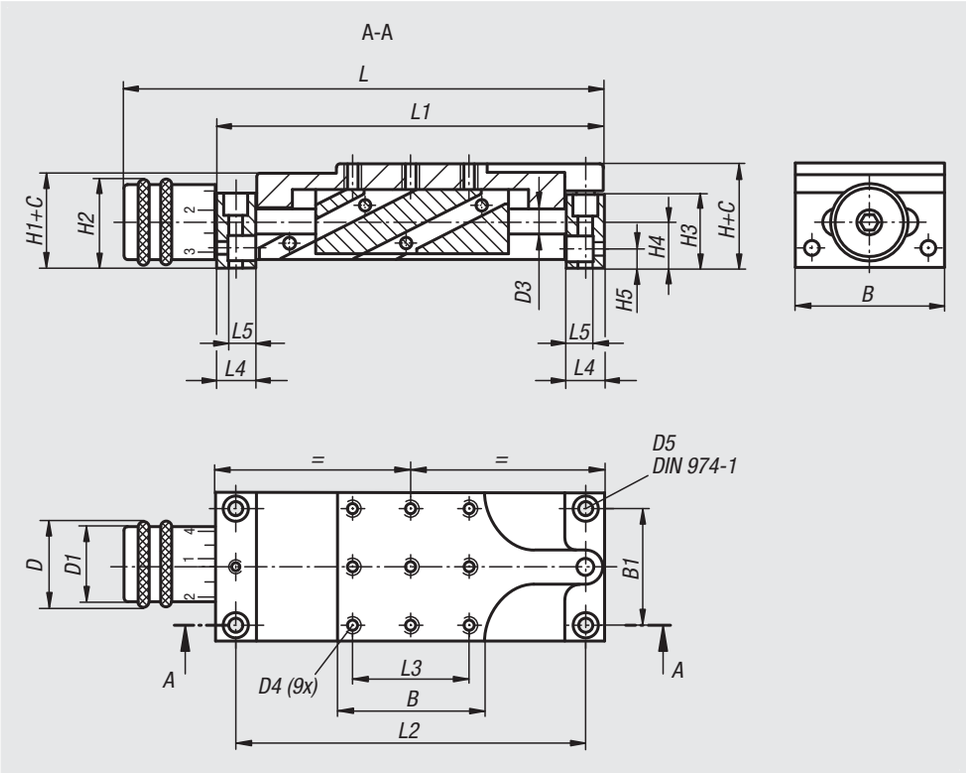

Material:
Vertical stage, bearing blocks and scale knob Al alloy, anodized.
Guiding columns stainless steel, ground.
Spindle stainless steel, rolled thread.
Guide bearing, maintenance-free

Version:
Guide backlash < 0.05 mm.
Spindle self-locking, with additional lock.

Sample order:
nlm 21140-04

Note:
For positioning the height of all types of components and assemblies e.g. stops, sensors, limit switches, tables, cameras, entire assemblies etc. The height of the table is adjusted manually by turning the scale knob. 1 increment of the scale equals 0.1 mm travel.

Within the respective sizes, the lift tables can be easily combined in the modular principle.

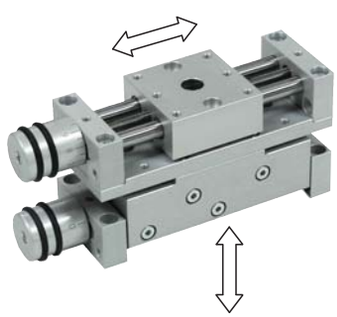

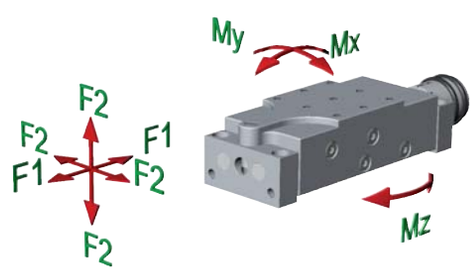

Order No.	B	B1	C (travel)	D	D1	D3	D4	D5	H	H1	H2	H3	H4	H5	L	L1	L2	L3	L4	L5	F1 N	F2 N	Mx Nm	My Nm	Mz Nm
21140-04	29	22	4	13	12	4	M3	3	19	17	14	13	8	4	84,5	70	62	22	8	6	30	50	0,5	0,5	2
21140-08	46	36	8	26	23	8	M4	4	32	29	27	23	14	6	148,5	120	108	36	12	8,5	80	100	2,5	2,5	5
21140-12	75	60	12	26	23	12	M6	6	38	36	28,5	27	15,5	7	209	180	165	60	15	11	150	200	10	10	20
21140-25	150	130	25	52	46	25	M10	10	68	64	54	52	28	13	347	290	265	130	25	18	500	700	50	50	100

Rotary discs

Material:
Body and rotary disc Al alloy.
Shaft stainless steel.

Version:
Body and rotary disc anodized.

Sample order:
nlm 21150-04

Note:
Loosen the clamping lever to revolve the rotary disc on the body. Rotates through 360°. The rotary disc indexes every 90° (21150-25 every 45°). Indexing is carried out by a ball plunger which can be easily removed.
Angular adjustment is set by a scale accurate to within 2°.
Within the respective sizes, the rotary disc can be easily combined in the modular principle.

Drawing reference:
1) Assembly hole for pressing out the nut
2) DIN 934 nut (x8) can be pressed out M (D4)
3) DIN 974-1 countersink (D4)

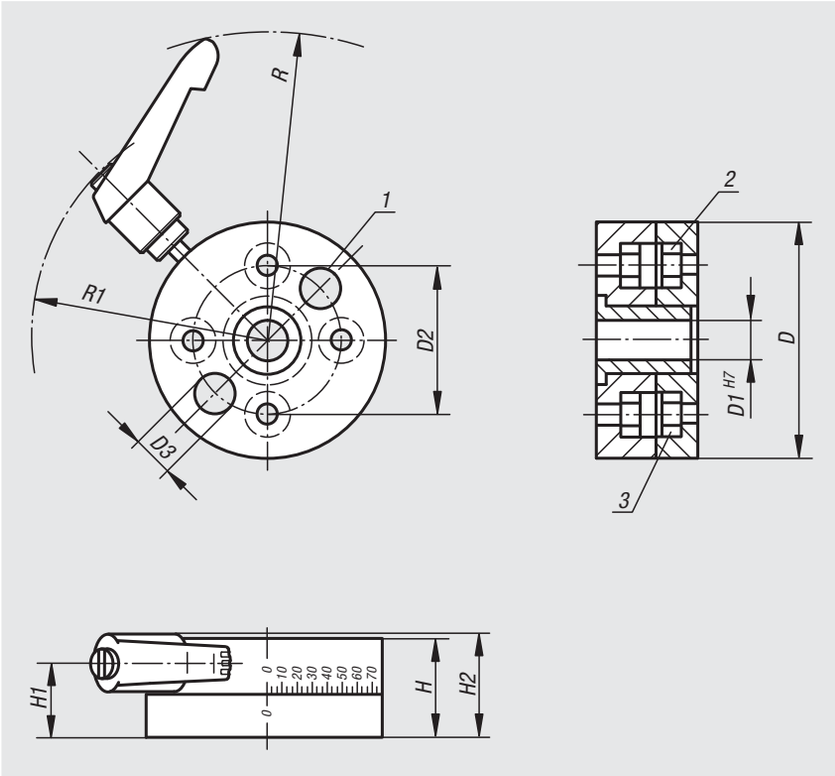

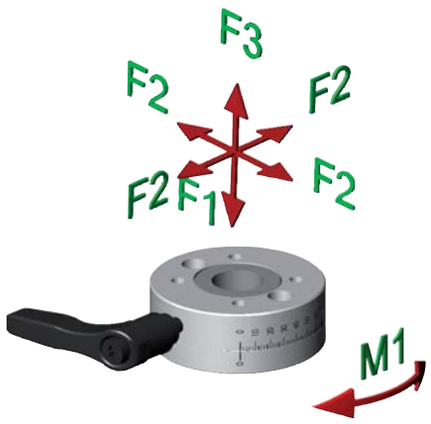

Order No.	D	D1	D2	D3	D4	H	H1	H2	R	R1	F1 N	F2 N	F3 N	M1 Nm
21150-04	35	6	22	6	3	15	9,5	16,5	64	44	200	200	100	2
21150-08	54	16	36	8	4	20	13,5	20,5	73	56	500	500	200	10
21150-12	80	25	60	13	6	25	17,5	24,5	85	69	500	500	200	15
21150-25	150	55	130	18,5	10	40	26	35,5	139	110	1000	500	500	50

Rotary positioning tables

Material:
Body and rotary table Al alloy, anodized.
Spindle steel, case-hardened.
Spindle bearing maintenance-free.

Version:
Radial play of rotation axis < 0.015 mm.
Axial play of rotation axis < 0.02 mm.
Repeat accuracy < 0.05°.
Spindle self-locking.

Sample order:
nlm 21160-08

Note:
360° adjustment, no end stop.
Scale graduation is 10 increments.
Transmission ratio:
21160-08 = 50:1
21160-12 = 55:1
21160-25 = 50:1

Within the respective sizes, the rotary table can be easily combined in the modular principle.

Drawing reference:
All counterbores to DIN 74-Bm (D6)

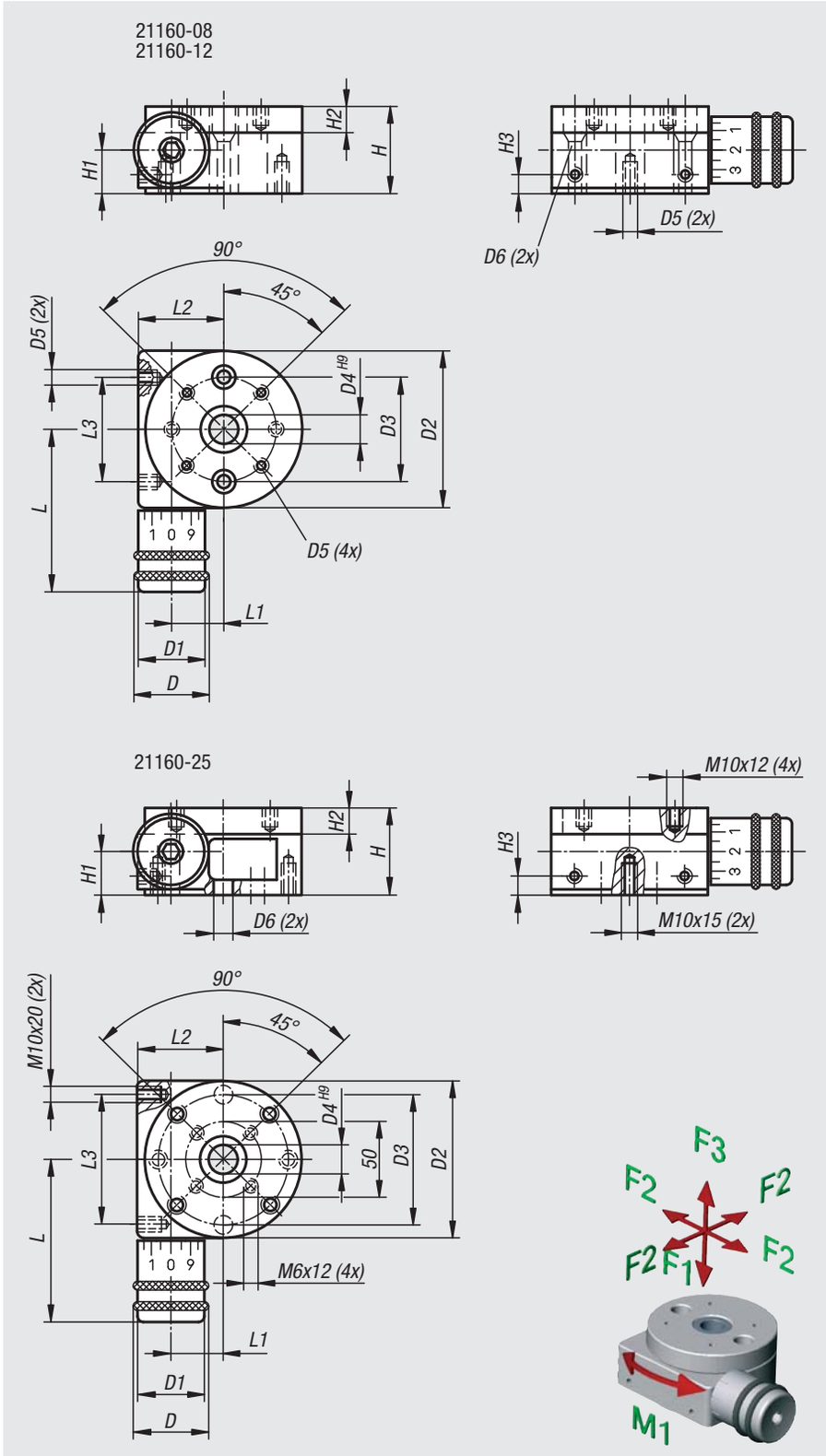

Order No.	D	D1	D2	D3	D4	D5	D6	H	H1	H2	H3	L	L1	L2	L3	F1 N	F2 N	F3 N	M1 Nm
21160-08	26	23	54	36	10	M4x6	4	30	14	9	6	56	17	29	36	500	500	200	3
21160-12	26	23	80	60	15	M6x9	6	40	17,5	12	6	69	31	43	60	500	500	200	5
21160-25	51	46	150	130	40	-	10,2	75	35	18	12	134	53	80	130	1000	1000	500	10

Rotary positioning tables

with position indicators

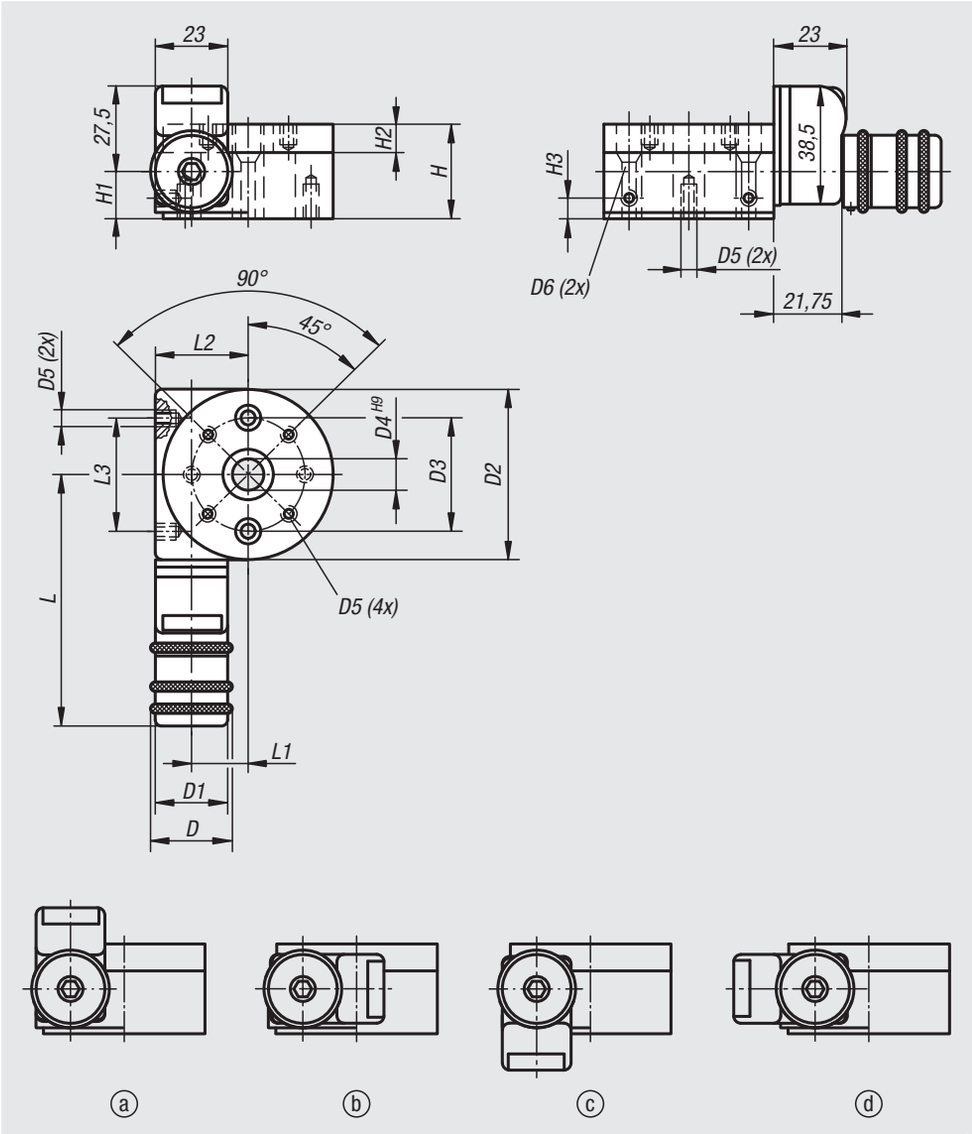

Material:
Body and rotary table Al alloy, anodized.
Spindle steel, case-hardened.
Spindle bearing maintenance-free.
Position indicator plastic.

Version:
Radial play of rotation axis < 0.015 mm.
Axial play of rotation axis < 0.02 mm.
Repeat accuracy < 0.05°.
Spindle self-locking.

Sample order:
nlm 21161-08

Note:
360° adjustment, no end stop.
The position indicator reads in increments of 0.1° increasing clockwise from 0.0° to 9.9° while the rotary table rotates counter-clockwise.
A scale on the circumference of the rotary table is marked every 10°.
The position indicator can be re-mounted in any of 4 positions by removing the grip and loosening the two screws.

Transmission ratio:
21161-08 = 50:1
21161-12 = 55:1

Within the respective sizes, the rotary table can be easily combined using the modular principle.

Drawing reference:
Assembly position of position indicator:
a) top (standard)
b) right
c) bottom
d) left

All counterbores to DIN 74-Bm (D6)

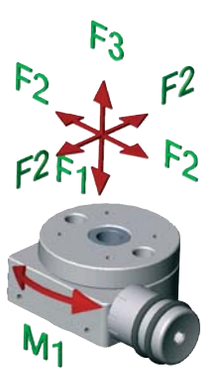

Order No.	D	D1	D2	D3	D4	D5	D6	H	H1	H2	H3	L	L1	L2	L3	F1 N	F2 N	F3 N	M1 Nm
21161-08	26	23	54	36	10	M4x6	4	30	14	9	6	80	17	29	36	500	500	200	3
21161-12	26	23	80	60	15	M6x9	6	40	17,5	12	6	93	31	43	60	500	500	200	5

Swivel angles

Material:
Aluminium alloy.

Version:
Milled and anodized

Sample order:
nlm 21162-04

Note:
The swivel angle is mounted on a rotary positioning table and offers further mounting possibilities.
Suitable for 21160 in matching sizes.

Drawing reference:
1) D3 for socket head screw ISO 4762

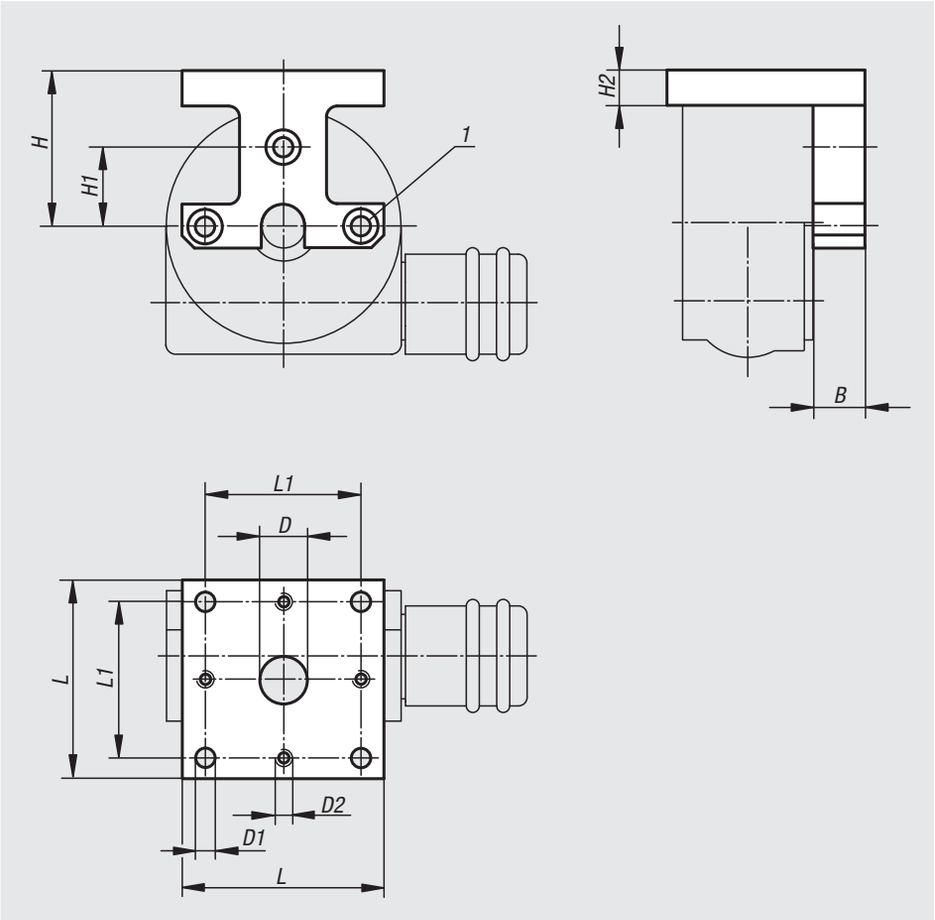

Order No.	B	D	D1	D2	D3	H	H1	H2	L	L1
21162-04	7	6	3,3	M3	M3	22	11	6	29	22
21162-08	12	11	4,5	M4	M4	36	18	8	46	36
21162-12	20	16	6,5	M6	M6	51	30	10	75	60
21162-25	25	40	11	M10	M10	98	65	20	150	130

Pivot heads

swivel angle 30°

Material:
Aluminium alloy.

Version:
anodized.

Sample order:
nlm 21170-12

Note:
Suitable for 21100, 21102, 21120, 21122, 21150, 21160, 21162 and 21180.

Drawing reference:
all (9x) counterbores to DIN 974-1 (D4),
all (9x) nuts DIN 934 M (D4)

By pressing out the nuts countersinks for socket screws become available allowing both fastening variations to be used.

1) D3 clamping screw (2x)

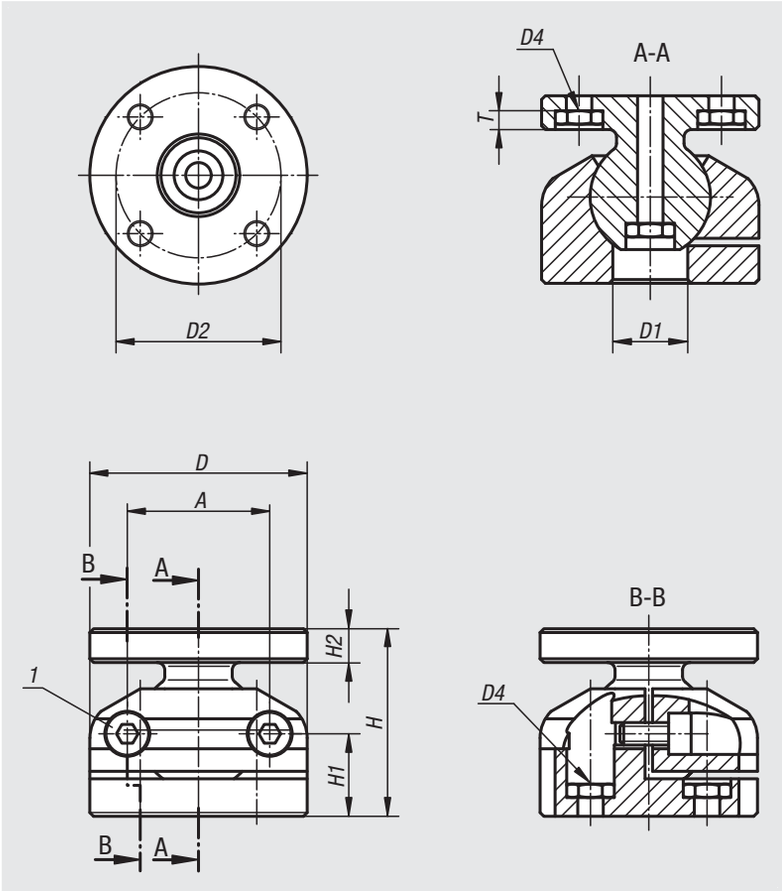

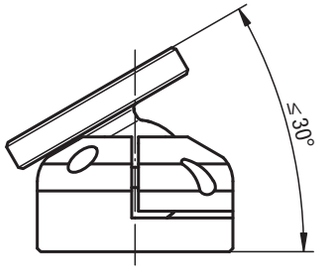

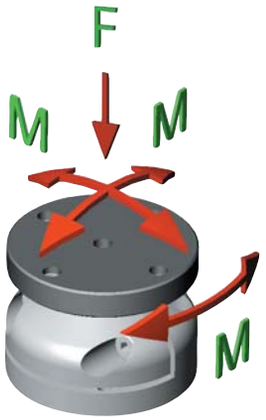

Order No.	A	D	D1	D2	D3	D4	H	H1	H2	T	F N	M Nm	Tightening torque of clamping screws (Nm)
21170-04	19	29	10	22	M3	3	25	11	5,5	3,5	300	3	1,11
21170-08	30	46	13	36	M4	4	35	15,5	7	4,5	700	8	2,55
21170-12	46	75	24	60	M6	6	54	23	11	6,6	2200	30	8,6
21170-25	92	150	40	130	M10	10	105	49	20	11	9000	150	42

21180

Base plates

Material:
Aluminium alloy.

Version:
anodized.

Sample order:
nlm 21180-04

Note:
Suitable for 21100, 21102, 21120, 21122, 21150, 21160, 21162 and 21190 in the respective size.

Drawing reference:
All counterbores to DIN 974-1 (D),
all threads M (D).

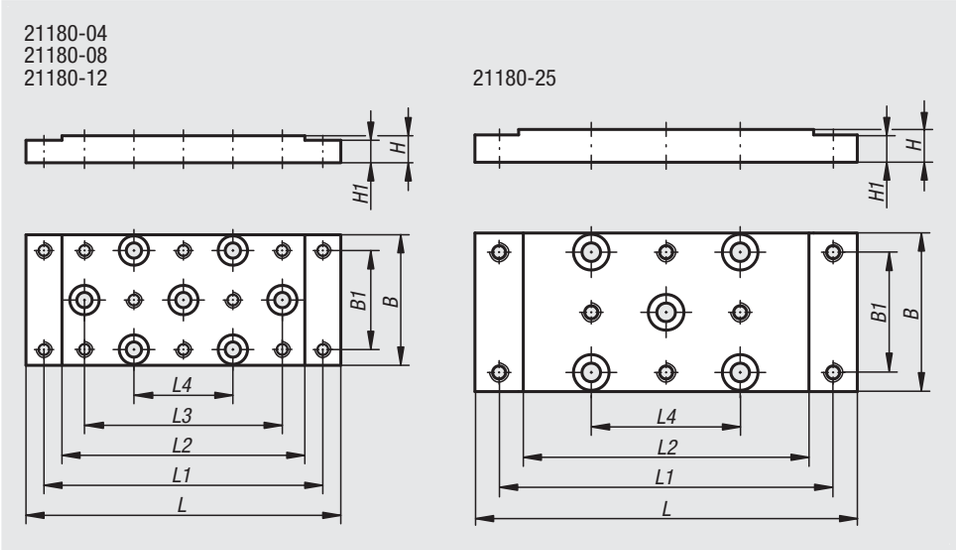

Order No.	B	B1	D	H	H1	L	L1	L2	L3	L4
21180-04	29	22	3	6	5	70	62	54	44	22
21180-08	46	36	4	8	6	120	108	96	72	36
21180-12	75	60	6	12	10	180	165	150	120	60
21180-25	150	130	10	20	18	290	265	240	-	130

21190

Angle plates

Material:
Aluminium alloy.

Version:
Milled and anodized

Sample order:
nlm 21190-04

Note:
Suitable for 21100, 21102, 21120, 21122, 21150, 21160, 21162 and 21180 in the respective size.

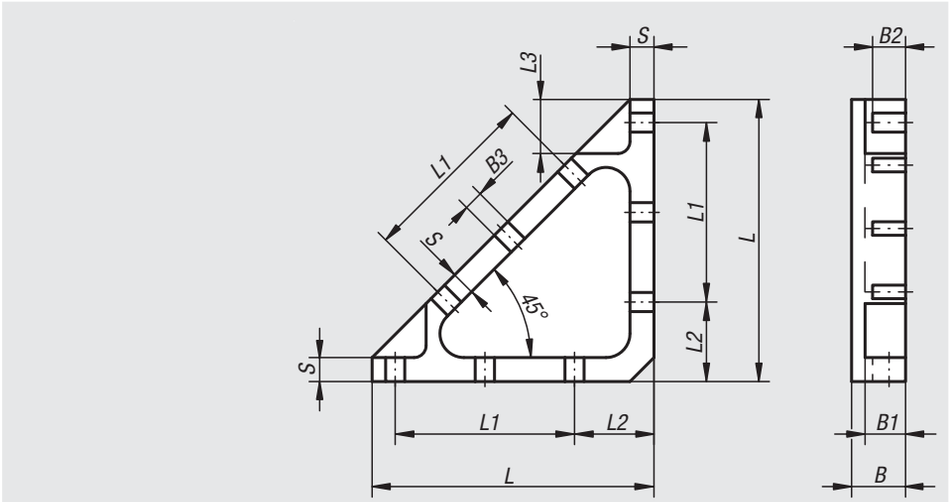

Order No.	B	B1	B2	B3	L	L1	L2	L3	S
21190-04	8	6	4,5	3,3	40	22	14,5	8	3
21190-08	12	10	8	4,5	58	36	17	11	4
21190-12	18	13,5	10,8	6,6	94	60	26,5	17,5	8
21190-25	25	20	15,5	11	180	130	35	31	15

Notes

Technical data for carriage rails

Off-centre forces
The following recommendations should be followed for the successful use of maintenance-free DryLin® linear bearings. A higher coefficient of friction compared to roller guides results in higher drive forces. The largest possible gap between bearings on a rail and lowest possible torque stress through drive and mass have a positive effect on the running and wear properties of the guide.

Quiet running
Plastic bearings which run on ground shafts or profiled rails are almost silent. Contrary to conventional ball-bearing guides, the noise level does not increase as the speed increases.

Design notes:
When using systems with two parallel rails, one side must be installed as a floating bearing. For every mounted position, whether horizontal, vertical or lateral, there is the correct fixed-floating bearing solution. This method of installation prevents difficulty of access or jamming of the guide where thre are differences in the parallelism between the rails.

The floating bearing is made by removing the static overdefined glide elements. This creates an additional degree of freedom on one rail to compensate for possible errors in parallelism.

In a fixed-floating bearing installation, errors in parallelism between the mounted rails can be compensated up to a maximum of 0.5 mm. When installing, ensure that the floating bearing has an equal amount of play in both directions. You can see the layout of the fixed-floating bearing system in the adjacent diagrams.

To avoid warping in the system, the base surface for the rails and carriage should be flat and even (e.g. milled surface). Small amounts of unevenness on the base surface can be compensated for by up to 0.5 mm by allowing for more play between carriage and rail. Adjusting the amount of play is only effective when the system is unloaded.

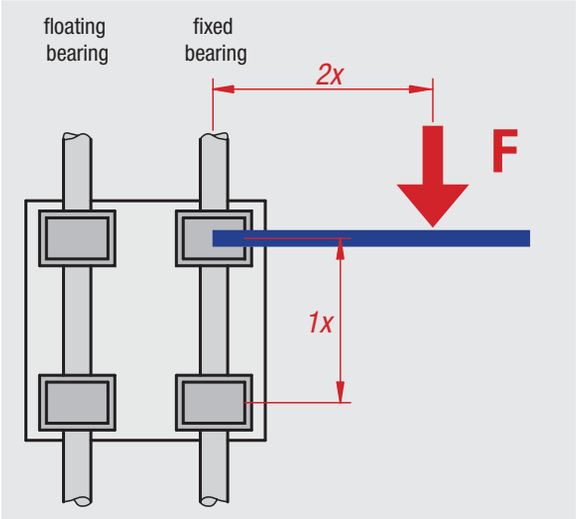

The 2:1 rule
If the 2:1 rule is not followed when using linear glide bearings, uneven movements may occur or the system may even jam. Help can often be provided by relatively simple alterations. The principle does not depend on the load or the drive force, it is a product of friction and always relates to the fixed bearing. The further away the drive is from the guide bearing, the greater will be the wear and the drive force required. If the distance between the driving force and the fixed bearing is more than double the distance between the bearings (2:1 rule), the guide will, in theory, jam by an adhesion friction value of 0.25.

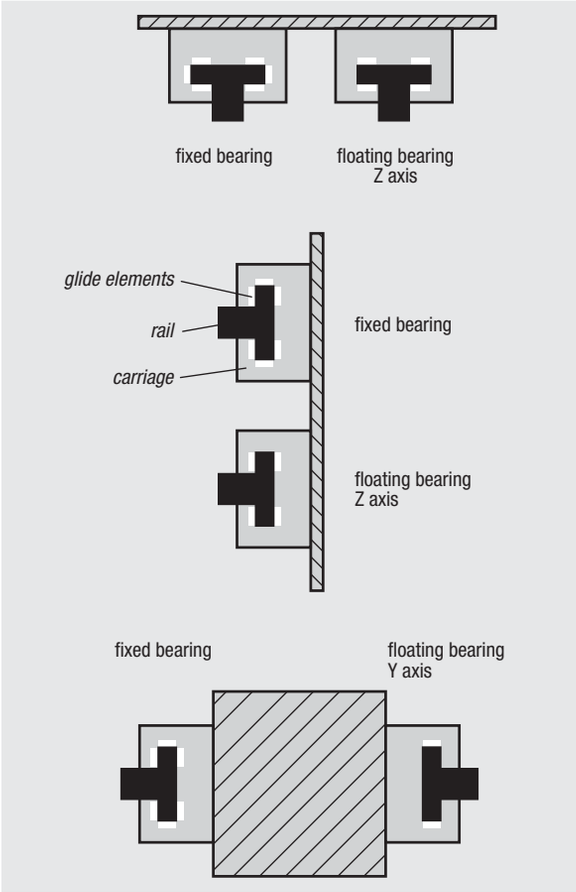

Horizontal variant with the floating bearing in the z axis

Lateral variant with the floating bearing in the z axis

Horizontal variant with lateral positioned carriages and floating bearing in the y axis

Technical data for carriage rails

DryLin® T - play adjustment
DryLin® linear guide rails always require a minimum amount of play between the slide and rail. They are supplied ready to use with the play pre-set. If you have special requirements please state whether you require a particularly small or particularly large amount of play. The play in the bearing of the guide slides can be re-adjusted later if necessary. This should always be carried out while unloaded.

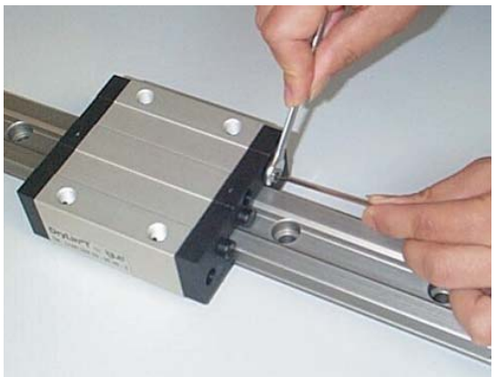

1. Loosen the locknuts after removing the caps.
   Spanner size:
   5 mm for 21200-15..
   5 mm for 21200-20..
   7 mm for 21200-25..
   7 mm for 21200-30..

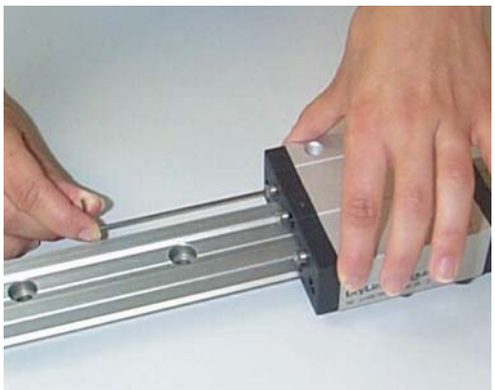

2. Re-adjust the bearing play for the three guide points with a hex key.
   Socket size:
   1.5 mm for 21200-15..
   1.5 mm for 21200-20..
   2.0 mm for 21200-25..
   2.0 mm for 21200-30..

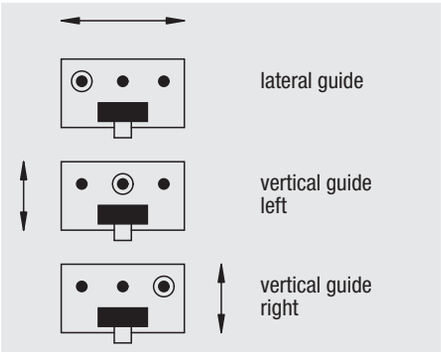

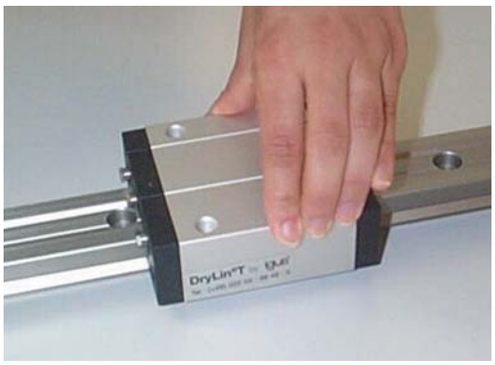

3. Check the play in the guide slides after adjustment. If it is sufficient, tighten the locknuts and replace the protective caps.

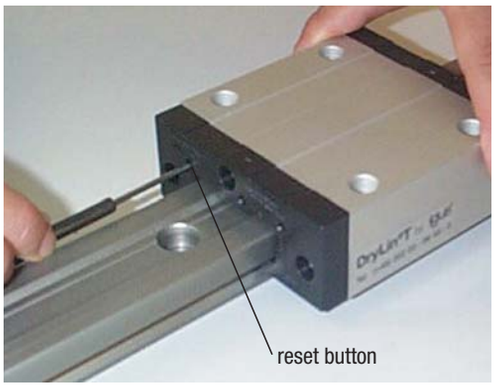

4. If too little play has been set so that the rail jams, it is not sufficient to just reset the cap screw. After resetting the screw, press the reset button on the side opposite the screw to release the slide elements.
   For this, use the following sized pins:
   2.5 mm for 21200-15..
   2.5 mm for 21200-20..
   3.0 mm for 21200-25..
   3.0 mm for 21200-30..

Carriages DryLin® T

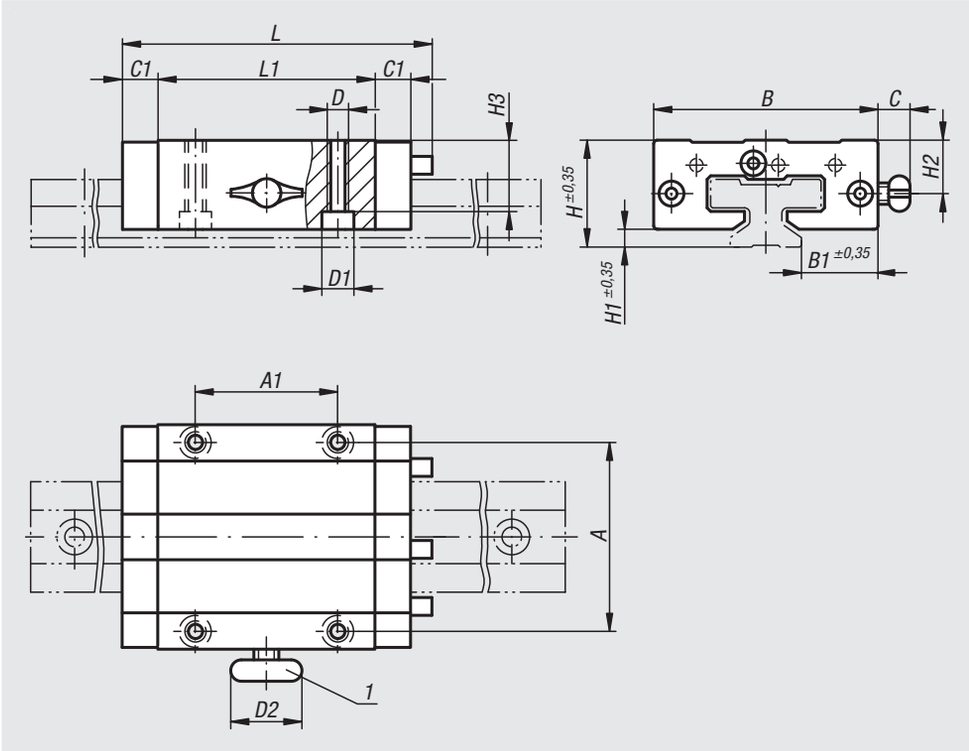

Material:
Sliding carriage: Base structure in extruded section, aluminium EN AW-6060.
Sliding elements: Maintenance free plain bearing iglidur® J.
Cap: Thermoplastic

Version:
Eloxal-coated E6/EV1. Black thermoplastic

Sample order:
nlm 21200-1500

Note:
With a low rate of inerita, high accelerations and short term extreme speeds up to 30 m/s are possible. DryLin® T linear glide guides are resistant to dirt and corrosion and are adjustable, maintenance-free and quiet.
Application temperature max. 80 °C.
As no lubricants are used they are recommended for use in food, medical, and clean room technologies.
Manual clamping was developed for simple functions. Polymer under constant pressure has a tendency to creep which causes a decrease in clamping force over time (up to 70%), which means that no safety-relevant parts should be clamped.
Suitable guide rails see 21200.

Drawing reference:
1) manual clamping

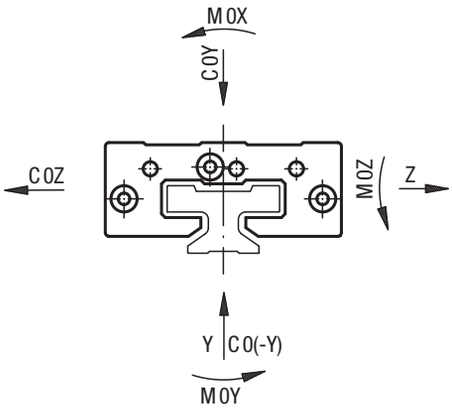

Order No. fixed bearing standard	Order No. fixed bearing with manual clamping	Order No. floating bearing Y axis	Order No. floating bearing Z axis	Size	C0Y kN	C0(-Y) kN	C0Z kN	M0X Nm	M0Y Nm	M0Z Nm	A	A1	B	B1
21200-1500	**21200-1510**	**21200-1520**	**21200-1530**	15	4	4	2	32	25	25	38	30	47	16
21200-2000	**21200-2010**	**21200-2020**	**21200-2030**	20	7,4	7,4	3,7	85	45	45	53	40	63	21,5
21200-2500	**21200-2510**	**21200-2520**	**21200-2530**	25	10	10	5	125	65	65	57	45	70	23,5
21200-3000	**21200-3010**	**21200-3020**	**21200-3030**	30	14	14	7	200	100	100	72	52	90	31

Order No. fixed bearing standard	Order No. fixed bearing with manual clamping	Order No. floating bearing Y axis	Order No. floating bearing Z axis	C	C1	D	D1 for screw to DIN 912	D2	H	H1	H2	H3	L	L1	Manual clamp thread
21200-1500	**21200-1510**	**21200-1520**	**21200-1530**	-/19/-/-	9	M5	M4	-/20/-/-	24	4	-/11,5/-/-	16	74	50	-/M6/-/-
21200-2000	**21200-2010**	**21200-2020**	**21200-2030**	-/18/-/-	10	M6	M5	-/28/-/-	30	5	-/15/-/-	19,8	87	61	-/M8/-/-
21200-2500	**21200-2510**	**21200-2520**	**21200-2530**	-/17/-/-	11	M8	M6	-/28/-/-	36	5	-/19/-/-	24,8	96	68	-/M8/-/-
21200-3000	**21200-3010**	**21200-3020**	**21200-3030**	-/20/-/-	12	M10	M8	-/28/-/-	42	6,5	-/21,5/-/-	27	109	79	-/M8/-/-

Guide rails DryLin® T

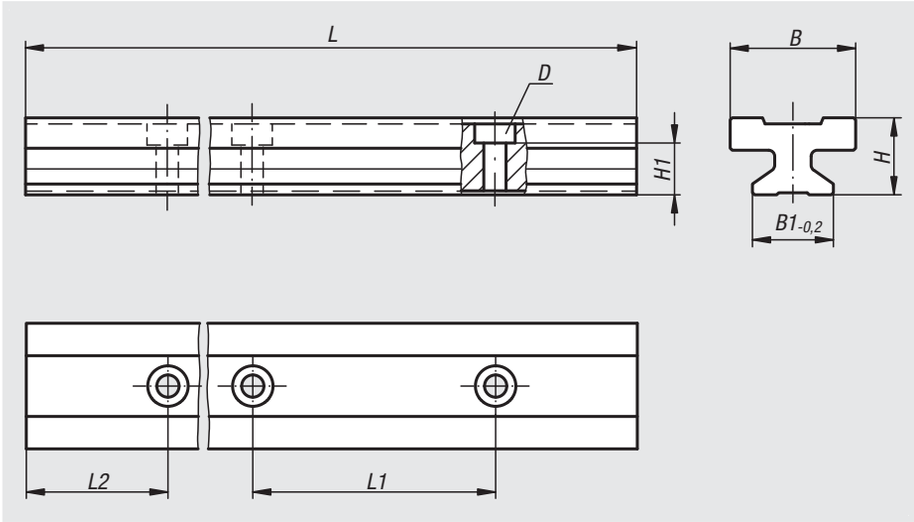

Material:
Extruded section, aluminium EN AW-6060.

Version:
Hard anodized aluminium, 50 µm. Hardness 500 HV.

Sample order:
nlm 21200-1530X3960 (L max.)

Ordering example guide rail:
nlm 21200-1520X500 (customer specific guide rail size 15)
** lengths L2 = 20 mm
* and L = 500 mm included
L2 and L only available in full mm.

Note:
The aluminium guide rail has good thermal conductivity and importantly heats only at continuously very high speeds.

Order No.	Version	Size	L max.	L2	B	B1	D for screw DIN 912	H	H1	L1
21200-1530X3960	L max.	15	3960	30	22	15	M4	15,5	10	60
21200-2030X3960	L max.	20	3960	30	31	20	M5	19	12,3	60
21200-2530X3960	L max.	25	3960	30	34	23	M6	21,5	13,8	60
21200-3020X3960	L max.	30	3960	20	40	28	M8	26	15,8	80

Order No.	Version	Size	L max.	L	L2	L2 min.	L2 max.	B	B1	D for screw DIN 912	H	H1	L1
21200-15X***	L2 and L customer specific	15	3960	*	**	20	49	22	15	M4	15,5	10	60
21200-20X***	L2 and L customer specific	20	3960	*	**	20	49	31	20	M5	19	12,3	60
21200-25X***	L2 and L customer specific	25	3960	*	**	20	49	34	23	M6	21,5	13,8	60
21200-30X***	L2 and L customer specific	30	3960	*	**	20	49	40	28	M8	26	15,8	80

Miniature linear guides DryLin® T

Material:
Slide carriage body die-cast zinc.
Slide elements maintenance-free iglidur® J.
Guide rail extruded profile EN AW-6060.

Version:
Hard anodized aluminium, 50 µm.
Hardness 500 HV.

Sample order:
nlm 21210-0900 (Carriages)

Ordering example guide rail:
nlm 21210-1212X0800 (L max.)
nlm 21210-1512X500 (customer specific guide rail size 15)
** lengths L2 = 12 mm
* and L = 500 mm included
L2 and L only available as full mm.

Note:
Due to their ability to run dry and their resistance to corrosion, miniature linear guides are completely maintenance-free. The slider components in iglidur® J are wear-resistant and replaceable. Can be use in a temperature range up to max. 80 °C. The small dimensions are a major advantage of these miniature linear guides.

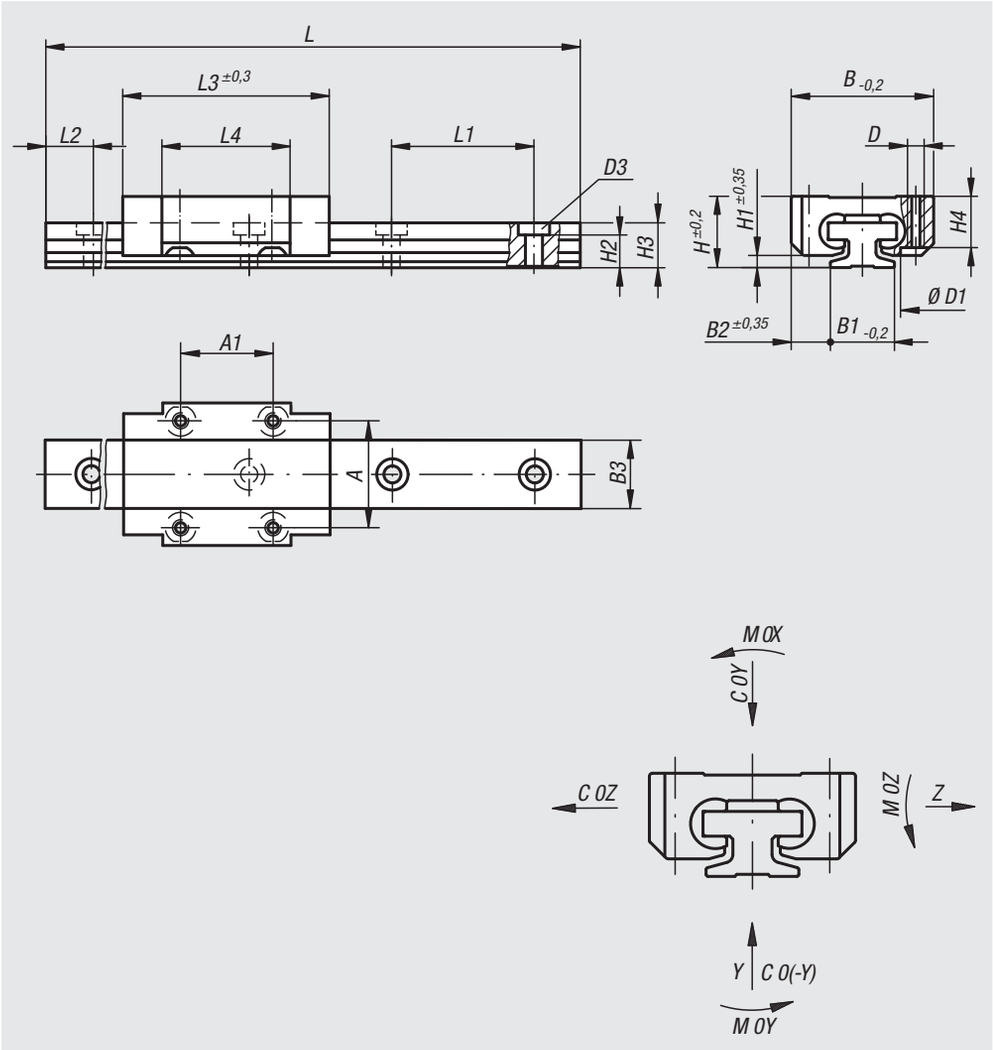

Miniature linear guides DryLin® T

Carriages

Order No. fixed bearing standard	Order No. floating bearing Y axis	Order No. floating bearing Z axis	Size	C0Y N	C0(-Y) N	C0Z N	M0X Nm	M0Y Nm	M0Z Nm
21210-0900	**21210-0920**	**21210-0930**	9	480	480	240	3,4	1,8	1,8
21210-1200	**21210-1220**	**21210-1230**	12	960	960	480	9,2	4,4	4,4
21210-1500	**21210-1520**	**21210-1530**	15	1400	1400	700	17	8	8

Order No. fixed bearing standard	Order No. floating bearing Y axis	Order No. floating bearing Z axis	Size	A	A1	B	B2	D	D1	H	H1	H4	L3	L4
21210-0900	**21210-0920**	**21210-0930**	9	15	13	20	5,5	M2	4,4	10	1,7	7,2	29	18
21210-1200	**21210-1220**	**21210-1230**	12	20	15	27	7,5	M3	6,5	13	2,2	9,5	34	22
21210-1500	**21210-1520**	**21210-1530**	15	25	20	32	8,5	M3	6,5	16	2,8	11	42	31

Guide rails

Order No.	Version	Size	L max.	L2	B1	B3	D3 for screw to DIN 912	H2	H3	L1
21210-0910X0800	L max.	9	800	10	9	9,6	M2	4,6	6,3	20
21210-1212X0800	L max.	12	800	12,5	12	13	M3	5,9	8,6	25
21210-1520X3000	L max.	15	3000	20	15	17	M3	7	10,8	40

Order No.	Version	Size	L	L2	L2 min.	L2 max.	B1	B3	D3 for screw to DIN 912	H2	H3	L1
21210-09X***	L2 and L customer specific	9	*	**	5	14,5	6	9,6	M2	4,6	6,3	20
21210-12X***	L2 and L customer specific	12	*	**	5	17	12	13	M3	5,9	8,6	25
21210-15X***	L2 and L customer specific	15	*	**	10	29,5	15	17	M3	7	10,8	40

Miniature slide guides DryLin® N

Material:
Bearing material maintenance-free iglidur® J.
Rails anodized aluminium.

Version:
Guide rail natural colour anodized.
Carriage fastening thread brass.

Sample order:
nlm 21320-1700 (Guide car, fixed bearing)

Ordering example guide rail:
nlm 21230-1720X1960 (L max.)
nlm 21230-1720X500 (customer specific guide rail)
** lengths L2 = 20 mm
* and L = 500 mm included
L2 and L only available in full mm.

Note:
Miniature slide guides are maintenance-free and corrosion resistant. Very high speeds and accelerations are possible due to the low weight. Applicable temperature max. 80 °C. Miniature slide guides are insensitive to dust and ideally suited to dry running.

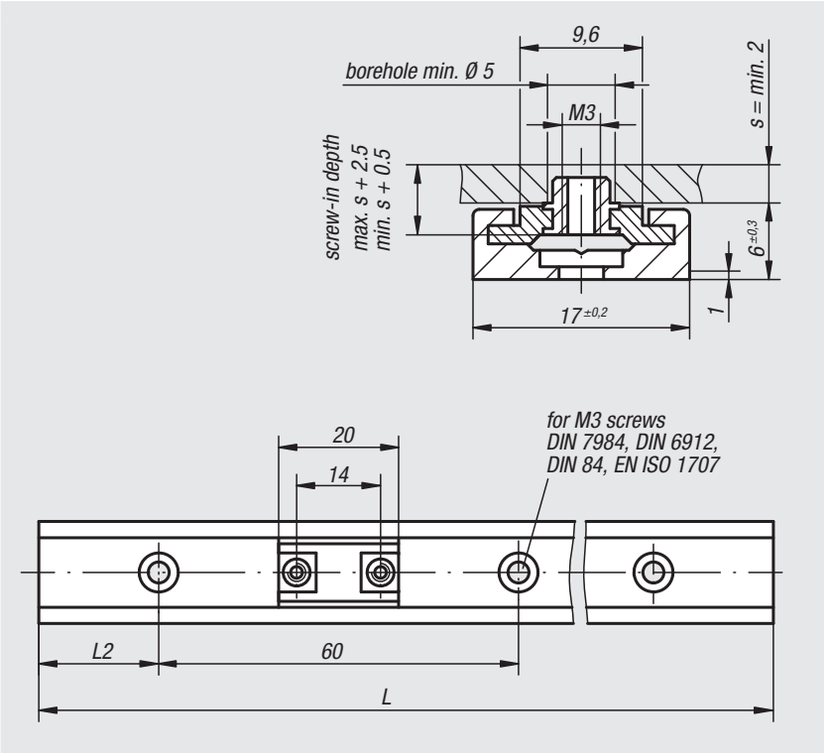

static load capacity and geometrical moment of inertia

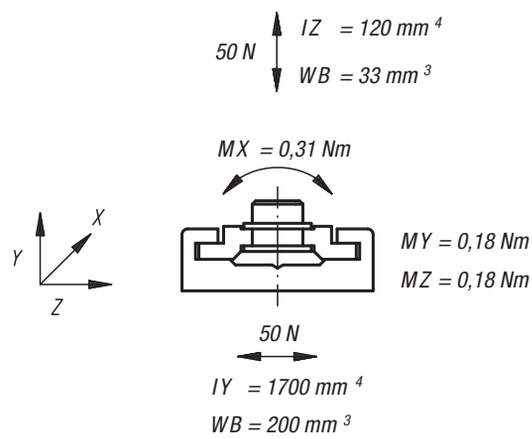

Carriage

Order No.	Version
21230-1700	fixed bearing
21230-1710	floating bearing

Guide rails

Order No.	Version	L max.	L2
21230-1720X1960	L max.	1960	20

Order No.	Version	L2	L2 min.	L2 max.
21230-17X***	L2 and L customer specific	**	20	49

Miniature slide guides DryLin® N

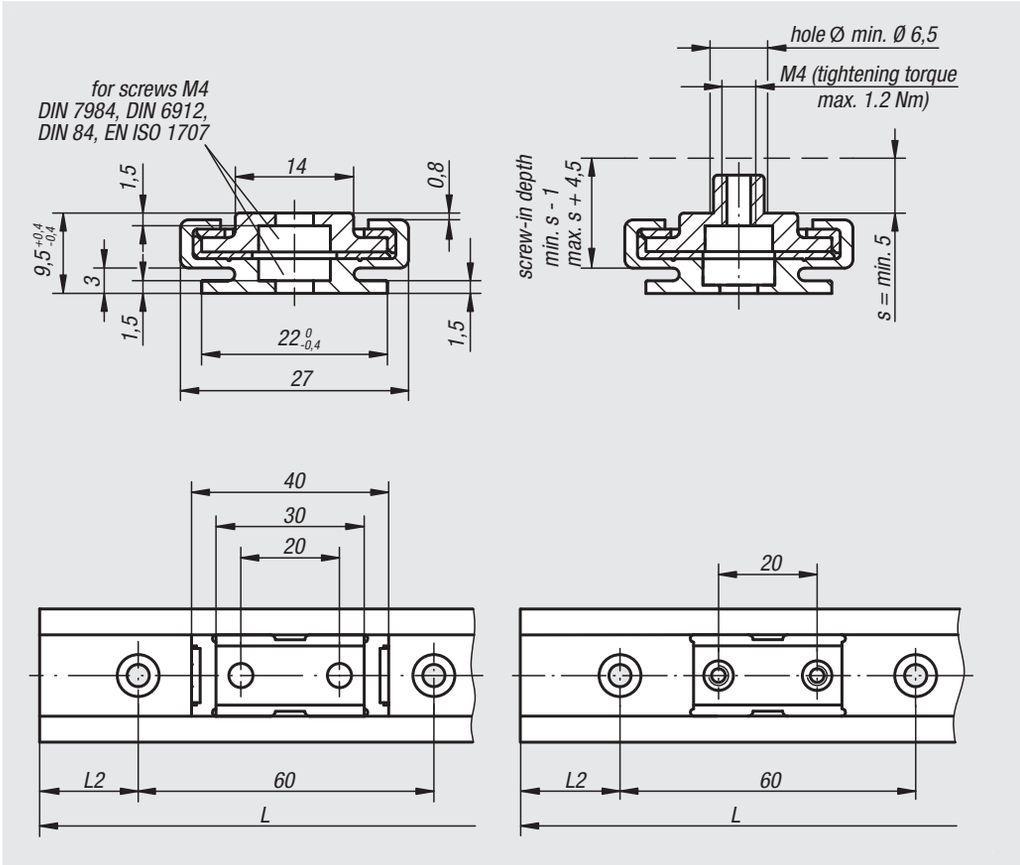

Material:
Carriage body zinc.
Plastic bearing material iglidur® J.
Rails anodized aluminium.

Version:
Body chromed.
Guide rail natural colour anodized.

Sample order:
nlm 21320-2700 (guide carriage with hole, fixed bearing)

Ordering example guide rail:
nlm 21230-2730X3000 (L max.)
nlm 21230-2730X1000 (customer specific guide rail)
** length L2 = 30 mm and
* L = 1000 mm included
L2 and L only available in full mm.

Note:
Miniature slide guides are maintenance-free and corrosion resistant. Very high speeds and accelerations are possible due to the low weight. Applicable temperature max. 80 °C.
Miniature slide guides are insensitive to dust and are ideal for dry running.

static load capacity and geometrical moment of inertia

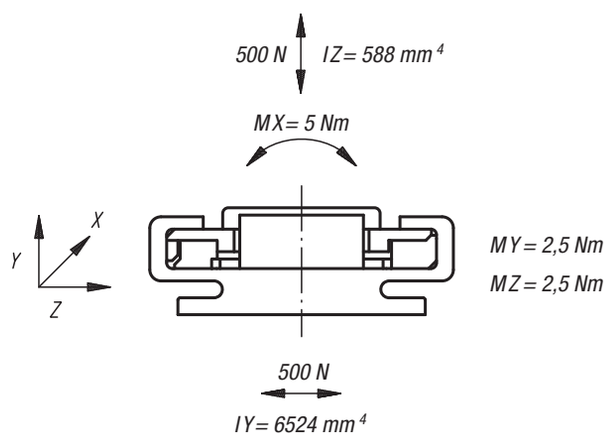

Carriage

Order No. fixed bearing	Order No. floating bearing	Version
21230-2700	**21230-2701**	carriages drilled through
21230-2710	**21230-2711**	carriages with tapped hole

Guide rails

Order No.	Version	L max.	L2
21230-2730X3000	L max.	3000	30

Order No.	Version	L2	L2 min.	L2 max.
21230-27X***	L2 and L customer specific	**	20	49

Miniature slide guides DryLin® N

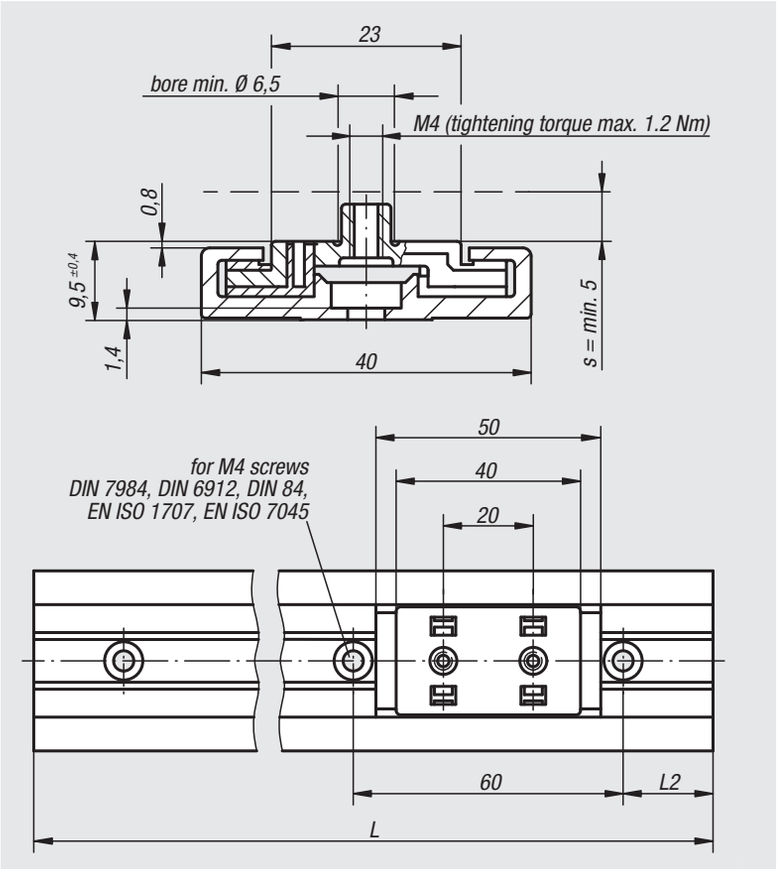

Material:
Carriage body zink.
Plastic bearing material iglidur® J.
Rail anodized aluminium.

Version:
Body chromed.
Guide rail natural colour anodized.

Sample order:
nlm 21230-4000 (guide carriage, fixed bearing)

Ordering example guide rail:
nlm 21230-4030X3000 (L max.)
nlm 21230-4030X1000 (customer specific guide rail)
** length L2 = 30 mm and
* L = 1000 mm included
L2 and L only available in full mm.

Note:
Miniature slide guides are maintenance-free and corrosion resistant. Very high speeds and accelerations are possible due to the low weight. Applicable temperature max. 80 °C. Miniature slide guides are insensitive to dust and are ideal for dry running.

static load capacity and geometrical moment of inertia

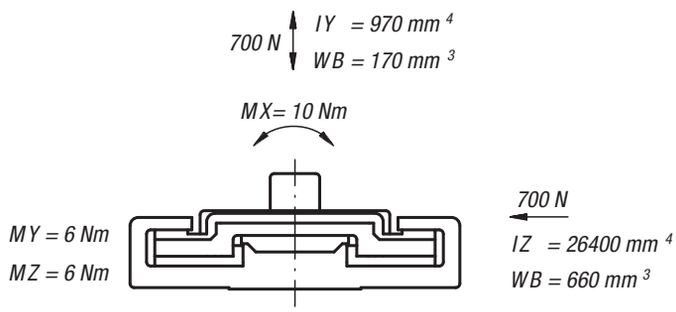

Carriage

Order No.	Version
21230-4000	fixed bearing
21230-4010	floating bearing

Guide rails

Order No.	Version	L max.	L2
21230-4030X3000	L max.	3000	30

Order No.	Version	L2	L2 min.	L2 max.
21230-40X***	L2 and L customer specific	**	20	49

Flat guides DryLin® N

Material:
Carriage body zink.
Plastic bearing material iglidur® J.
Rail anodized aluminium.

Version:
Body chromed.
Guide rail natural colour anodized.

Sample order:
nlm 21230-8000 (guide carriage, fixed bearing)

Ordering example guide rail:
nlm 21230-8030X3960 (L max.)
nlm 21230-8030X1000 (customer specific guide rail)
** length L2 = 30 mm and
* L = 1000 mm included
L2 and L only available in full mm.

Note:
Flat slide guides are maintenance-free and corrosion resistant. Very high speeds and accelerations are possible due to the low weight. Applicable temperature max. 80 °C.
Miniature slide guides are insensitive to dust and are ideal for dry running.

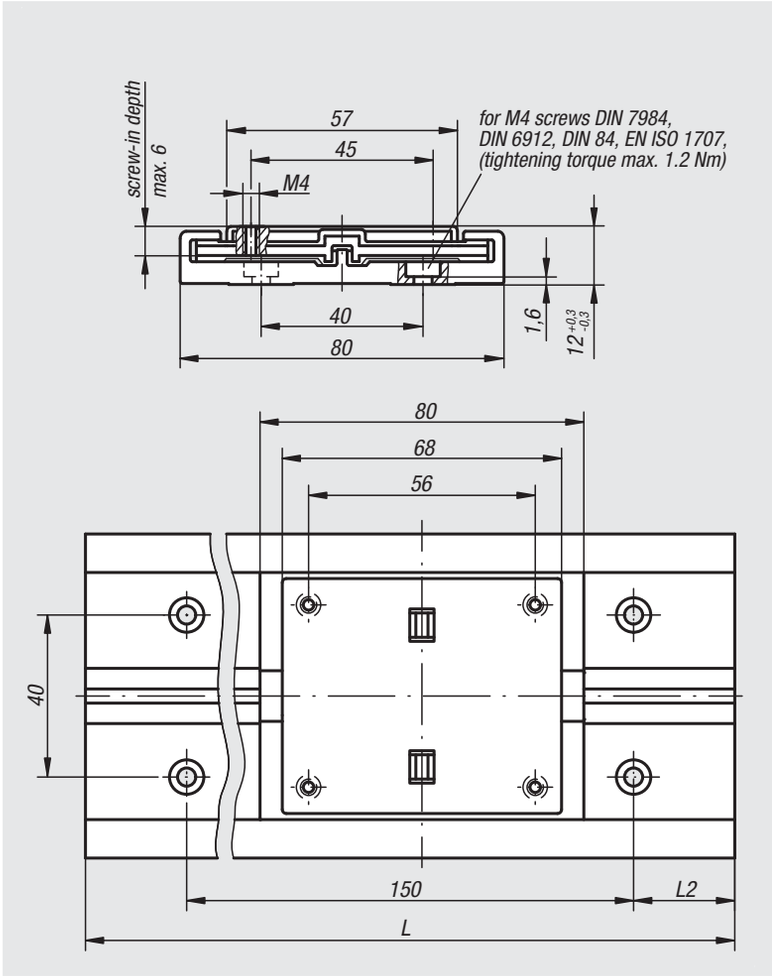

static load capacity and geometrical moment of inertia

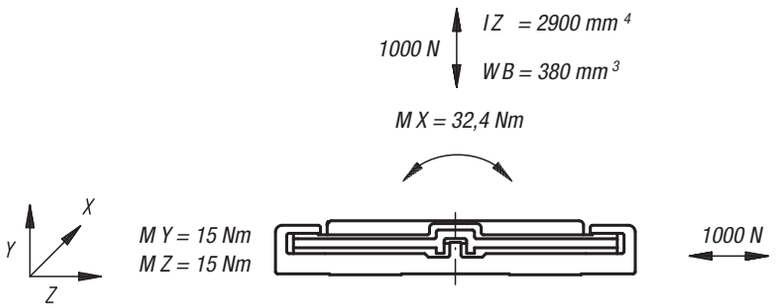

Carriage

Order No.	Version
21230-8000	fixed bearing
21230-8010	floating bearing

Guide rails

Order No.	Version	L max.	L2
21230-8030X3960	L max.	3960	30

Order No.	Version	L2	L2 min.	L2 max.
21230-80**X*	L2 and L customer specific	**	25	100

Carriages DryLin® W

Material:
Carriage die-cast zinc.
Mounting plate aluminium.
Bearing material iglidur® J.

Version:
Carriage chromed.
Mounting plate anodized.

Sample order:
nlm 21240-0600060

Note:
DryLin® W carriages are maintenance-free and corrosion resistant. Lacking the need of lubrication makes the system highly dirt resistant. Low friction coefficient in dry running and very quiet. Due to the flat and wide design, high torques are possible. Speeds up to 15 m/s. Applicable temperature -40 °C to +90 °C.

Accessories:
Double guide rails 21240.

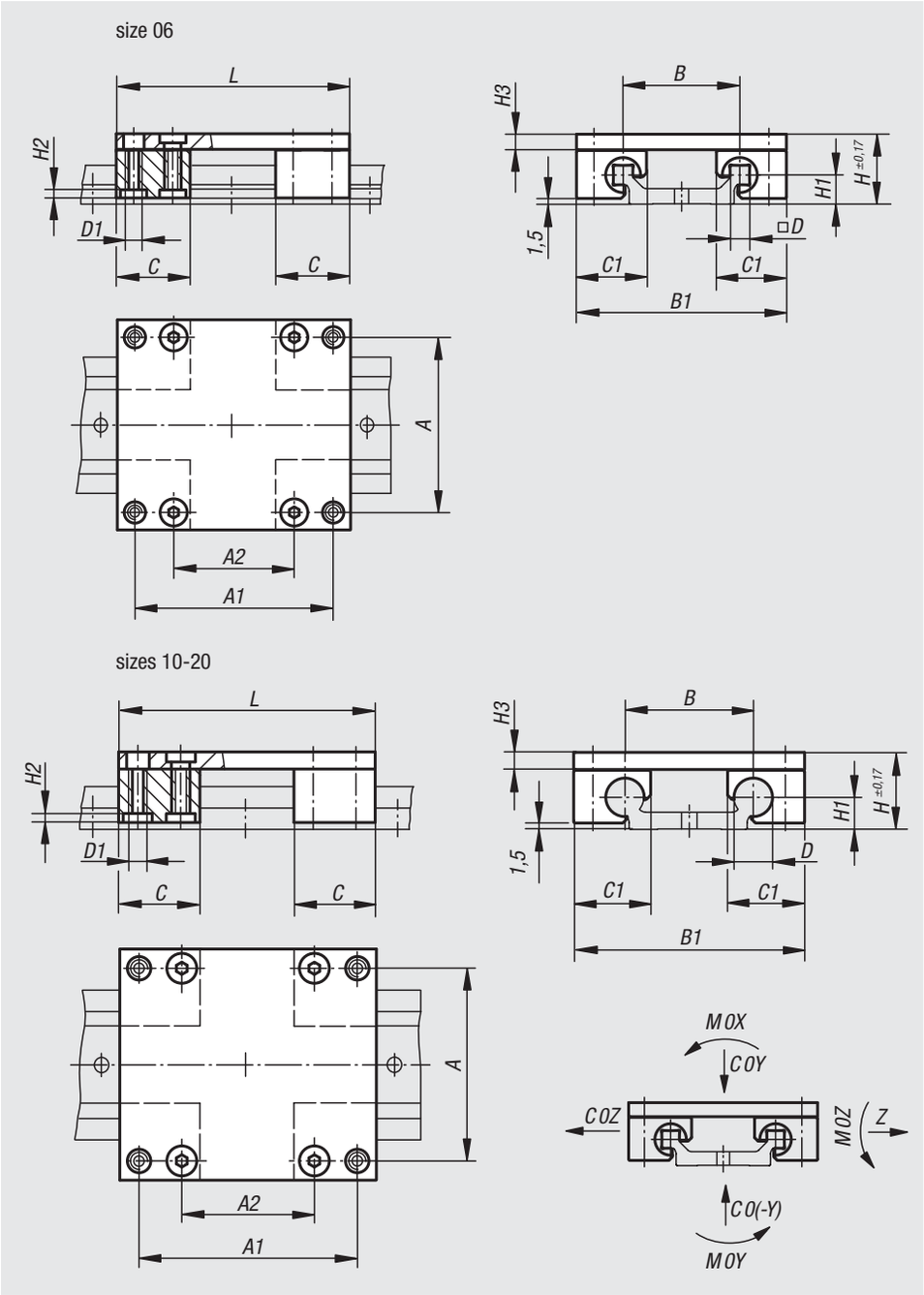

Order No.	Size	A	A1	A2	B	B1	C	C1	D	D1	H	H1	H2	H3	L	C0Y kN	C0(-Y) kN	C0Z kN	M0X Nm	M0Y Nm	M0Z Nm
21240-0600060	6	45	51	31	30	54	19	18	5	M4	18	7,5	2	4	60	1,68	1,68	1,68	25	34	34
21240-0600080	6	45	71	51	30	54	19	18	5	M4	18	7,5	2	4	80	1,68	1,68	1,68	25	51	51
21240-0600100	6	45	91	71	30	54	19	18	5	M4	18	7,5	2	4	100	1,68	1,68	1,68	25	68	68
21240-1000100	10	60	87	55	40	73	29	26	10	M6	24	9	3,5	6	100	4,8	4,8	4,8	96	170	170
21240-1000150	10	60	137	105	40	73	29	26	10	M6	24	9	3,5	6	150	4,8	4,8	4,8	96	290	290
21240-1000200	10	60	187	155	40	73	29	26	10	M6	24	9	3,5	6	200	4,8	4,8	4,8	96	410	410
21240-1600100	16	86	82	46	58	104	36	34,5	16	M8	35	14	4	8	100	8,4	8,4	8,4	240	270	270
21240-1600150	16	86	132	96	58	104	36	34,5	16	M8	35	14	4	8	150	8,4	8,4	8,4	240	480	480
21240-1600200	16	86	182	146	58	104	36	34,5	16	M8	35	14	4	8	200	8,4	8,4	8,4	240	690	690
21240-2000150	20	116	132	78	82	134	45	42,5	20	M8	44	20	4	8	150	12,8	12,8	12,8	525	670	670
21240-2000200	20	116	182	128	82	134	45	42,5	20	M8	44	20	4	8	200	12,8	12,8	12,8	525	990	990
21240-2000250	20	116	232	178	82	134	45	42,5	20	M8	44	20	4	8	250	12,8	12,8	12,8	525	1250	1250

Slide carriages DryLin® W

Material:
Die-cast zinc.
Bearing material iglidur® J.

Version:
Chromed

Sample order:
nlm 21240-0600

Note:
DryLin® W slide carriages are maintenance-free and corrosion resistant. Lacking the need of lubrication makes the system highly dirt resistant. Low friction coefficient in dry running and very quiet. Suitable for single or double rails. Speeds up to 15 m/s.
Applicable temperature -40 °C to +90 °C.

Accessories:
Guide rails 21240.

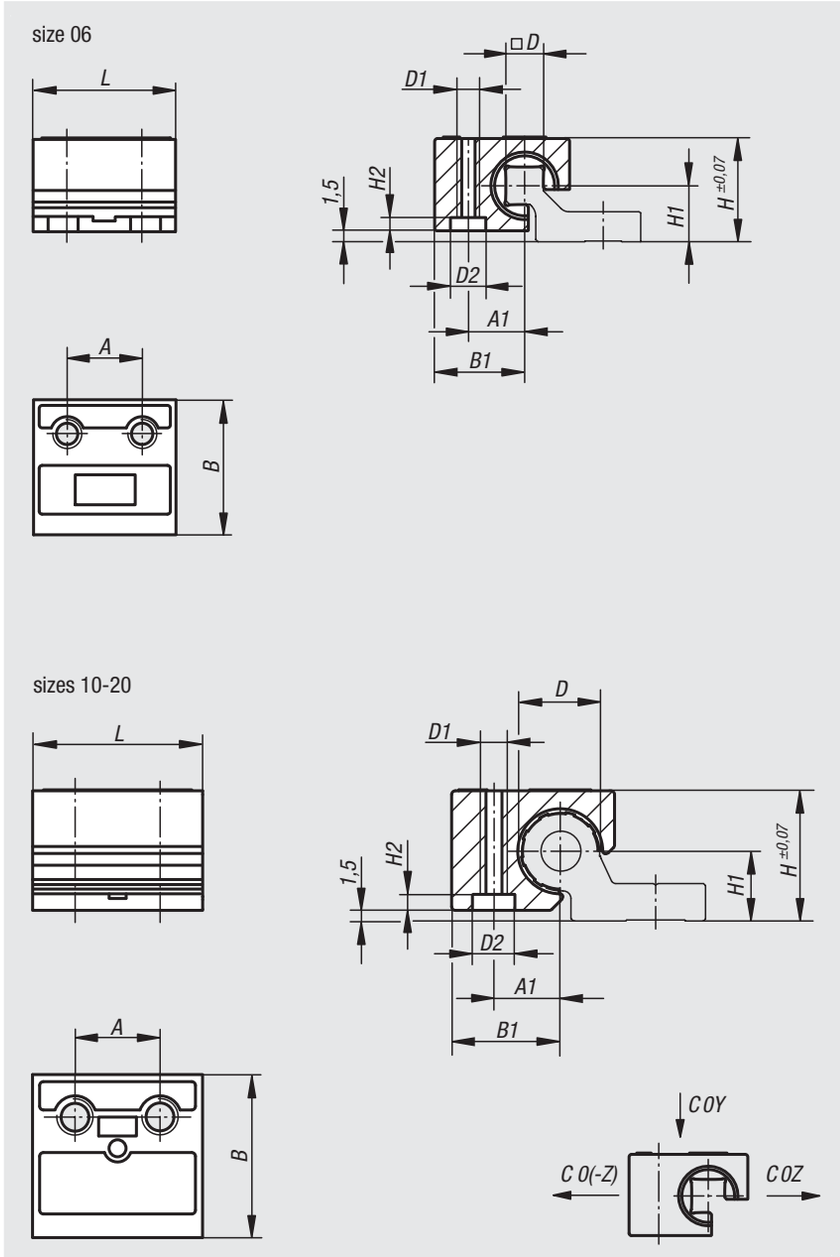

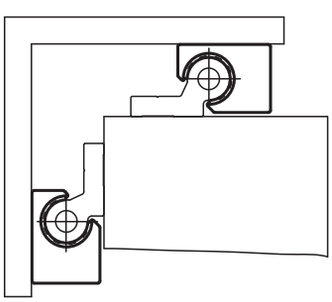

Order No.	Version	Size	A	A1	B	B1	D	D1	D2	H	H1	H2	L	C0Y kN	C0Z kN	C0(-Z) kN
21240-0600	fixed bearing standard	6	10	7,5	18	12	5	M4	7	14	7,5	2	19	0,42	0,42	0,14
21240-0620	floating bearing Y axis	6	10	7,5	18	12	5	M4	7	14	7,5	2	19	0,42	0,42	0,14
21240-0630	floating bearing Z axis	6	10	7,5	18	12	5	M4	7	14	7,5	2	19	0,42	0,42	0,14
21240-1000	fixed bearing standard	10	16	10	26	16,5	10	M6	9,5	18	9	3,5	29	1,2	1,2	0,25
21240-1020	floating bearing	10	16	10	26	16,5	10	M6	9,5	18	9	3,5	29	1,2	1,2	0,25
21240-1600	fixed bearing standard	16	18	14	34,5	23	16	M8	11,5	27	14	4	36	2,1	2,1	0,4
21240-2000	fixed bearing standard	20	27	17	42,5	26	20	M8	11,5	36	20	4	45	3,2	3,2	0,5
21240-2020	floating bearing	20	27	17	42,5	26	20	M8	11,5	36	20	4	45	3,2	3,2	0,5

Guide rails DryLin® W

single

Material:
Aluminium.

Version:
Hard-anodized, layer thickness 50 µm.
Hardness 500 HV

Sample order:
nlm 21240-10630X3000 (L max.)

Ordering example guide rail:
nlm 21240-10620X500 (customer specific guide rail size 06)
** include length L2 = 20 mm and
* L = 500 mm
L2 and L only available in full mm.

Note:
Single guide rails enable highest flexibility during construction and easy assembly. Can be used to to compensate for height differences in height. Hard anodised aluminium is used as rail material and ensures best friction and wear results. Robust and dirt resistant for transporting heavy loads safely and maintenance-free.

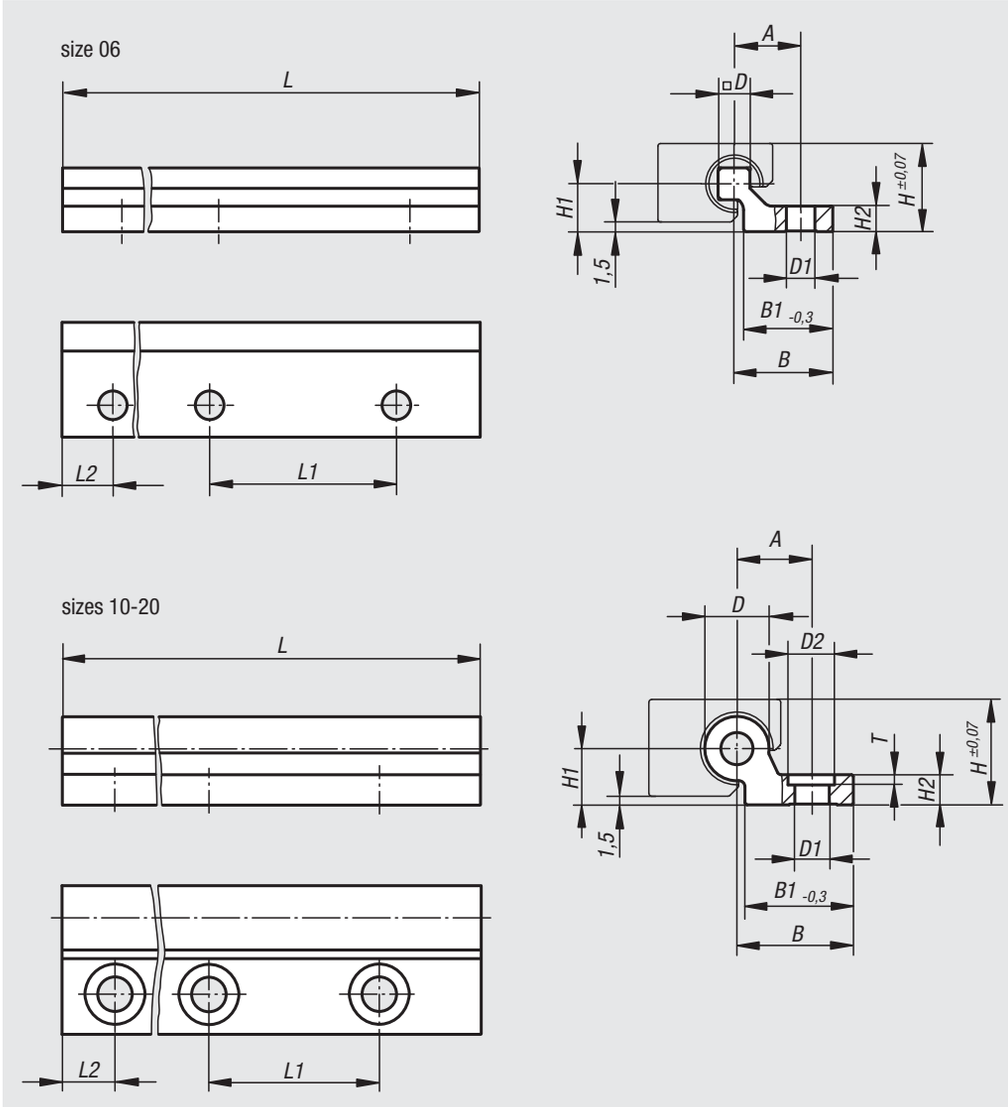

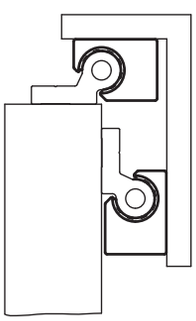

Order No.	Version	Size	L max.	L2	A	B	B1	D	D1	D2	H	H1	H2	L1	T
21240-10630X3000	L max.	6	3000	30	10,5	15,5	14	5	4,5	-	14	7,5	4	60	-
21240-11030X4000	L max.	10	4000	30	17	27	27	10	6,6	-	18	9	5,5	120	-
21240-11630X4000	L max.	16	4000	30	19	29	27	16	9	15	27	14	7,5	120	4
21240-12030X4000	L max.	20	4000	30	21	31	27	20	9	15	36	20	9,5	120	5

Order No.	Version	Size	L max.	L2	L2 min.	L2 max.	A	B	B1	D	D1	D2	H	H1	H2	L1	T
21240-106X***	L2 and L customer specific	6	*	**	20	49,5	10,5	15,5	14	5	4,5	-	14	7,5	4	60	-
21240-110X***	L2 and L customer specific	10	*	**	20	79,5	17	27	27	10	6,6	-	18	9	5,5	120	-
21240-116X***	L2 and L customer specific	16	*	**	20	79,5	19	29	27	16	9	15	27	14	7,5	120	4
21240-120X***	L2 and L customer specific	20	*	**	20	79,5	21	31	27	20	9	15	36	20	9,5	120	5

Guide rails DryLin® W

double

Material:
Aluminium.

Version:
Hard-anodized, layer thickness 50 µm.
Hardness 500 HV

Sample order:
nlm 21240-20630X3000 (L max.)

Ordering example guide rail:
nlm 21240-20620X500 (customer specific guide rail size 06)
** include length L2 = 20 mm and
* L = 500 mm
L2 and L only available in full mm.

Note:
Extremely flat rails with wide guides reaching to the edge for optimally support high torque. Robust and dirt resistant for transporting heavy loads safely and maintenance-free.

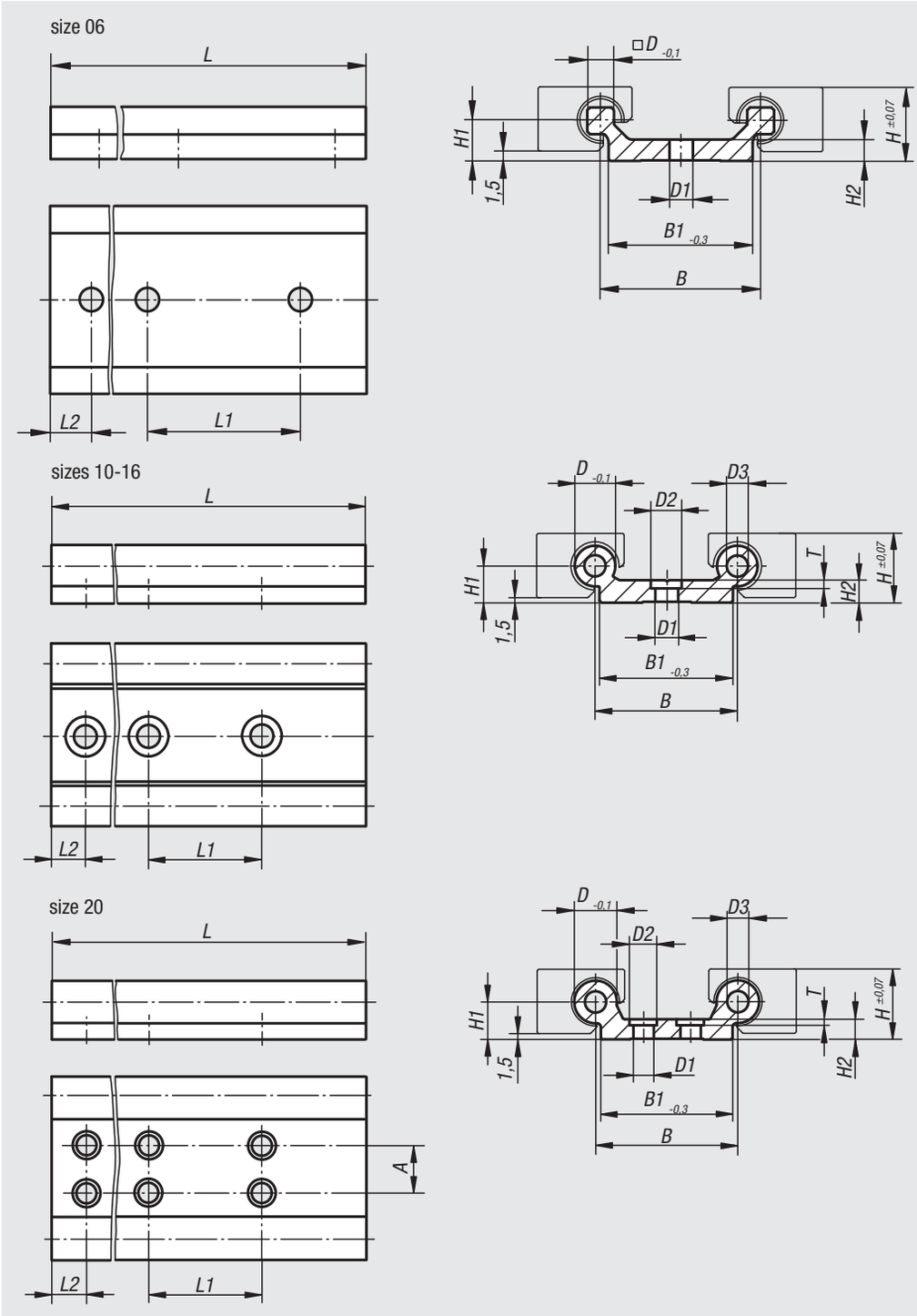

Order No.	Version	Size	L max.	L2	L2 min.	L2 max.	A	B	B1	D	D1	D2	D3	H	H1	H2	L1	T
21240-20630X3000	L max.	6	3000	30	-	-	-	30	27	5	4,5	-	-	14	7,5	4	60	-
21240-21030X4000	L max.	10	4000	30	-	-	-	40	40	10	6,6	-	-	18	9	5,5	120	-
21240-21630X4000	L max.	16	4000	30	-	-	-	58	54	16	9	15	8	27	14	7,5	120	4
21240-22030X4000	L max.	20	4000	30	-	-	40	82	74	20	9	15	14	36	20	9,5	120	5
21240-206X***	L2 and L customer specific	6	*	**	20	49,5	-	30	27	5	4,5	-	-	14	7,5	4	60	-
21240-210X***	L2 and L customer specific	10	*	**	20	79,5	-	40	40	10	6,6	-	-	18	9	5,5	120	-
21240-216X***	L2 and L customer specific	16	*	**	20	79,5	-	58	54	16	9	15	8	27	14	7,5	120	4
21240-220X***	L2 and L customer specific	20	*	**	20	79,5	40	82	74	20	9	15	14	36	20	9,5	120	5

Roller carriages

compact and heavy-duty version

Material:
Steel.

Version:
galvanized.

Sample order:
nlm 21320-120080

Note:
Roller carriage with low coefficient of friction, therefore very free-running. The roller journals are lifetime-lubricated and have a 2Z (dust cover) seal. By simply moving the centre cam roller, the roller carriage can adjusted to be play-free or under the desired initial tension in the rail. The compact version has a plastic stripper for cleaning the tracks.

Application temperature -30 °C to +120 °C.

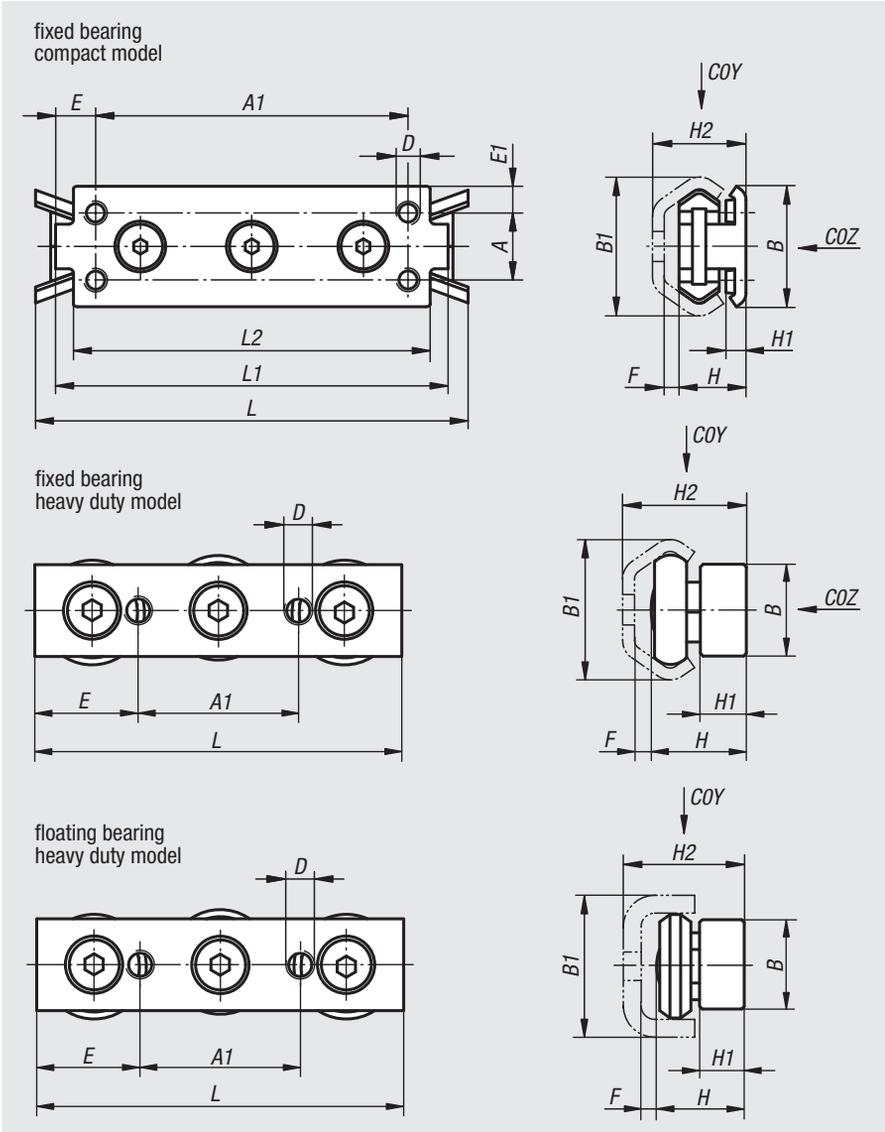

Fixed bearing, compact version

Order No.	Size	A	A1	B	B1	D	E	E1	F	H	H1	H2	L	L1	L2	C0Y N	C0Z N
21320-120080	20	-	60	18	19,2	M5	10	9	3	11,5	5,5	16	90	80	71	300	170
21320-130088	30	15	70	27	29,5	M5	5	6	4	15	4,5	20,5	97	88	80	800	400
21320-145150	45	23	120	40	46,4	M6	7,5	8,5	5	22	4	31	160	150	135	1600	860

Fixed bearing, heavy-duty version

Order No.	Size	A1	B	B1	D	E	F	H	H1	H2	L	C0Y N	C0Z N
21320-220060	20	20	10	19,2	M5	20	2,6	13	6	17,8	60	326	185
21320-230080	30	35	20	29,5	M6	22,5	3,3	20,7	10	26,5	80	870	435
21320-245120	45	55	25	46,4	M8	32,5	5,1	28,9	12	38	120	1740	935

Floating bearing, heavy-duty version

Order No.	Size	A1	B	B1	D	E	F	H	H1	H2	L	C0Y N
21320-320060	20	20	10	20,5	M5	20	2,5	11,55	6	18,25 ±0,6	60	300
21320-330080	30	35	20	31,8	M6	22,5	3,5	19,2	10	27,95 ±1,0	80	800
21320-345120	45	55	25	44,8	M8	32,5	5	25,5	12	37,25 ±1,75	120	1600

Roller guide rails

Material:
Steel.

Version:
galvanized.

Sample order:
nlm 21320-120X0800
(include length L)

Note:
Stamped and rolled guide rails.

The fixed bearing rail is the main absorber of radial and axial forces. The floating bearing rail serves to absorb the load of radial forces and, in combination with the fixed bearing rail, as a support bearing for absorbing torques that occur. In the connection of the fixed and the floating bearings, the floating bearing rail compensates for parallelism errors and tolerances.

On request:
Lengths up to a max. 3120 mm.

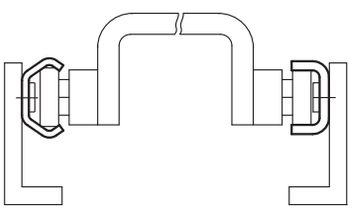

roller guide rail for fixed bearing

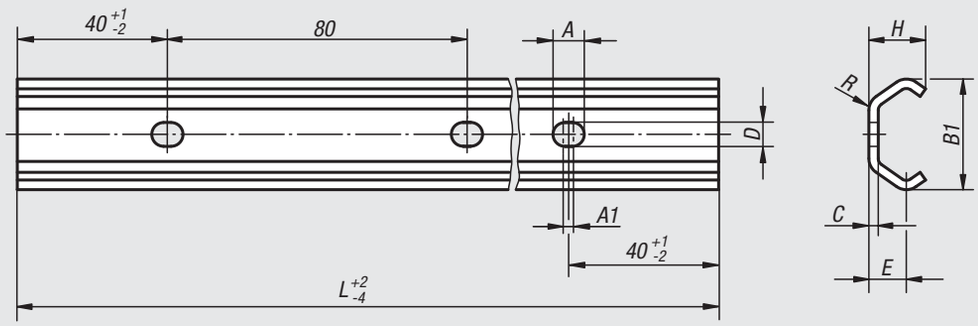

roller guide rail for floating bearing

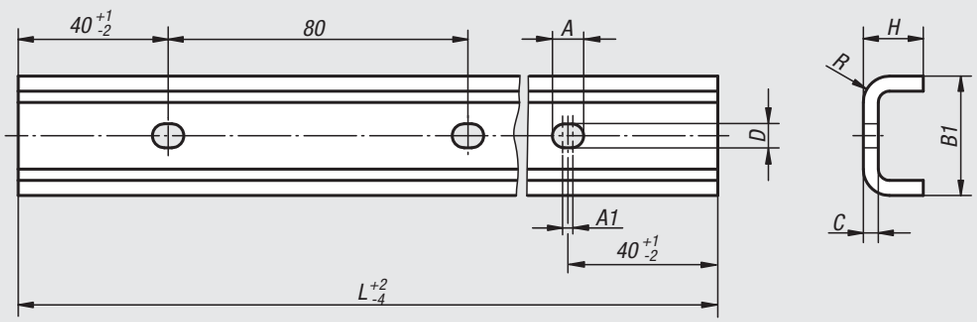

fastening screw

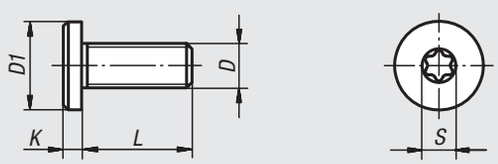

Roller guide rails for fixed bearing

Order No.	Size	A	A1	B1	C	D	E	H	L	R
21320-120X	20	7	2	19,2	2	5	7	10	800/1040/2080/3120	3
21320-130X	30	8,4	2	29,5	2,5	6,4	10	15	800/1040/2080/3120	4,5
21320-145X	45	11	2	46,4	4	9	15,5	24	800/1040/2080/3120	6,5

Roller guide rails for floating bearing

Order No.	Size	A	A1	B1	C	D	H	L	R
21320-220X	20	7	2	20,5	3	5	11	800/1040/2080/3120	5,5
21320-230X	30	8,4	2	31,8	4	6,4	16	800/1040/2080/3120	7
21320-245X	45	11	2	44,8	4,5	9	24,5	800/1040/2080/3120	9,5

Fastening screws

Order No.	D	D1	K	L	S	Suitable for	Tightening torque Nm
21320-0408	M4	8	2	8	T20	size 20	4
21320-0510	M5	10	2	10	T25	size 30	9
21320-0816	M8	16	3	16	T40	size 45	22

Roller carriages

steel

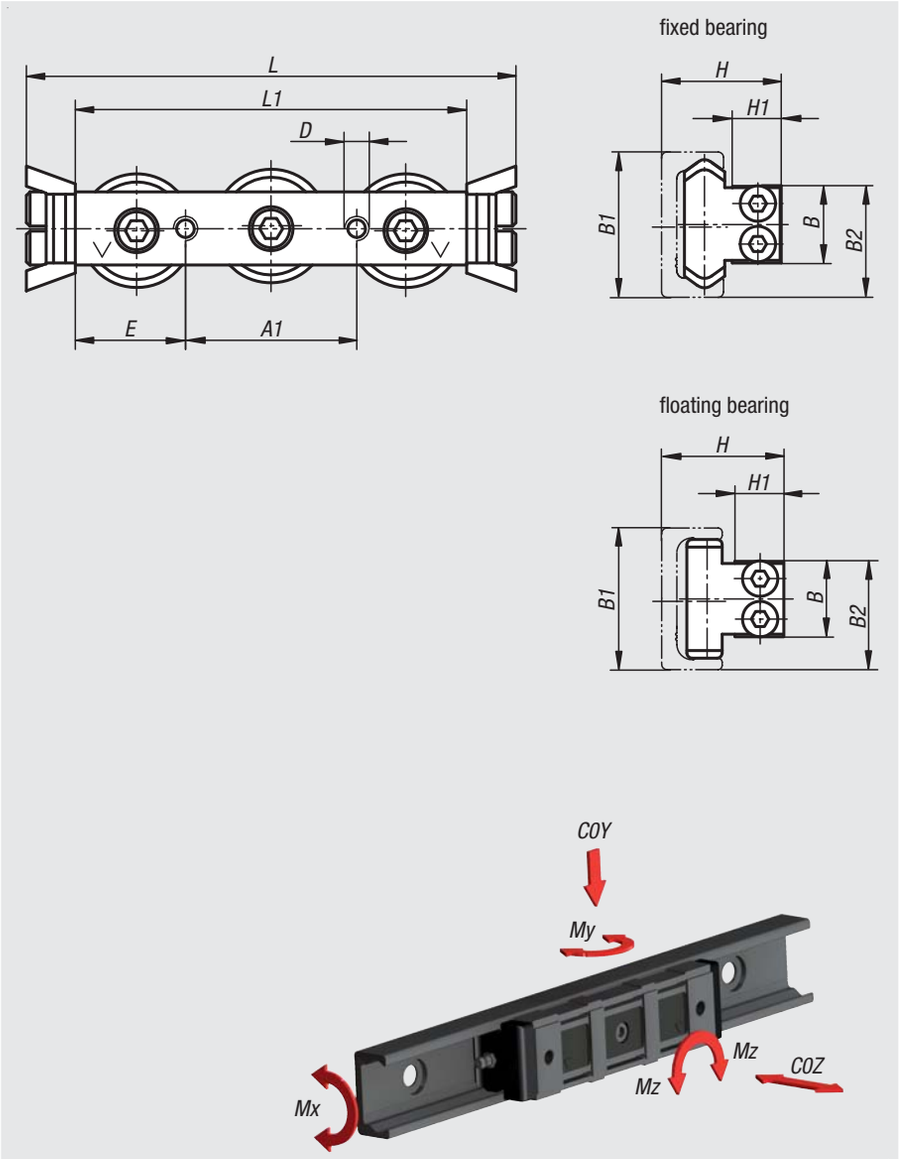

Material:
Race body steel.
Wiper modified polyamide.
Rollers steel 1.3505.

Version:
Race body galvanized.

Sample order:
nlm 21322-1128080

Note:
Roller carriages with lifetime lubricated ball bearings and polyamide wipers that protect the tracks from dirt. A simple adjustment of the middle roller makes the roller carriage play-free or sets the desired preload in the rail.
High traverse speeds of up to 7 m/s and extremely quiet (faster and quieter than systems with recycling ball bearings).

Application temperature -30°C to +120°C.

On request:
Roller carriages with 4 or 5 rollers.

Fixed bearing

Order No.	Size	A1	B	B1	B2	D	E	H	H1	L	L1	C dynamic N	C0Y N	C0Z N	Mx Nm	My Nm	Mz Nm
21322-1118060	18	20	9,5	18	14	M5	20	15	5,7	76	60	1530	820	260	1,5	4,7	8,2
21322-1128080	28	35	14,9	28	21,7	M5	22,5	23,9	9,7	100	80	4260	2170	640	6,2	16	27,2
21322-1135100	35	45	19,9	35	27,85	M6	27,5	30,2	11,9	120	100	8040	3510	1060	12,9	33,7	61,5
21322-1143120	43	55	24,9	43	34,3	M8	32,5	37	14,5	140	120	12280	5500	1570	23,6	60	104,5

Floating bearing

Order No.	Size	A1	B	B1	B2	D	E	H min.	H max.	H1	L	L1	C dynamic N	C0Y N	Mz Nm
21322-1218060	18	20	9,5	18	14	M5	20	14,7	16,1	5,7	76	60	1530	820	8,2
21322-1228080	28	35	14,9	28	21,7	M5	22,5	23,3	25,2	9,7	100	80	4260	2170	27,2
21322-1235100	35	45	19,9	35	27,85	M6	27,5	28,9	32,9	11,9	120	100	8040	3510	61,5
21322-1243120	43	55	24,9	43	34,3	M8	32,5	35,6	39,5	14,5	140	120	12280	5500	104,5

Roller carriages

aluminium

Material:
Race body die-cast aluminium.
End pieces polyester.
Wipers modified polyamide.
longitudinal seals rubber.
Rollers steel 1.3505.

Version:
Runner body nickel-plated.

Sample order:
nlm 21322-2128088

Note:
Roller carriage with lifetime lubricated ball bearings and patented wiper technology which lubricates the system while in motion. A simple adjustment of the middle roller makes the roller carriage play-free or sets the desired preload in the rail.
High traverse speeds of up to 7 m/s and extremely quiet (faster and quieter than systems with recycling ball bearings).

Application temperature -30 °C to +120 °C.

On request:
Roller carriages with 4 or 5 rollers.

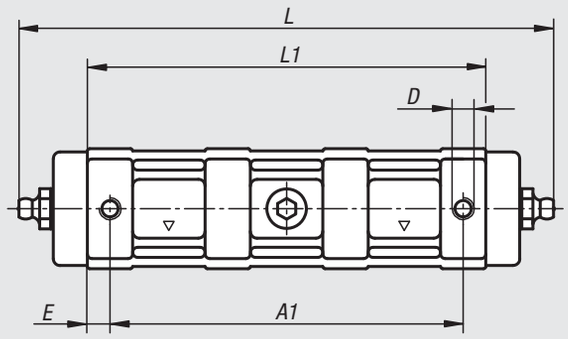

fixed bearing

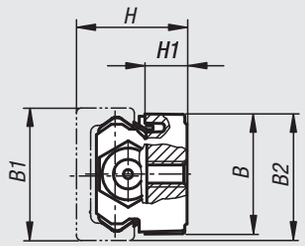

floating bearing

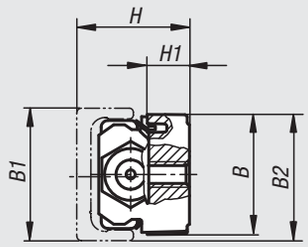

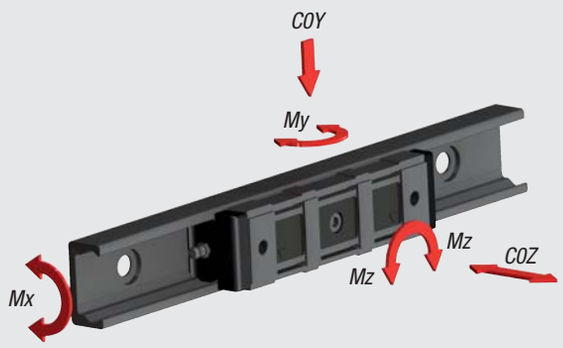

Fixed bearing

Order No.	Size	A1	B	B1	B2	D	E	H	H1	L	L1	C dynamic N	C0Y N	C0Z N	Mx Nm	My Nm	Mz Nm
21322-2118062	18	52	17,6	18	18,3	M5	5	16,5	6,4	74	62	1530	820	260	1,5	4,7	8,2
21322-2128088	28	78	26,5	28	28	M5	5	24	9,3	124	88	4260	2170	640	6,2	16	27,2
21322-2143134	43	114	41	43	41,9	M8	10	37	13,7	170	134	12280	5500	1570	23,6	60	104,5

Floating bearing

Order No.	Size	A1	B	B1	B2	D	E	H min.	H max.	H1	L	L1	C dynamic N	C0Y N	Mz Nm
21322-2218062	18	52	17,6	18	18,3	M5	5	16,5	17,6	6,4	74	62	1530	820	8,2
21322-2228088	28	78	26,5	28	28	M5	5	24	25,3	9,3	124	88	4260	2170	27,2
21322-2243134	43	114	41	43	41,9	M8	10	37	39,5	13,7	170	134	12280	5500	104,5

Roller guide rails

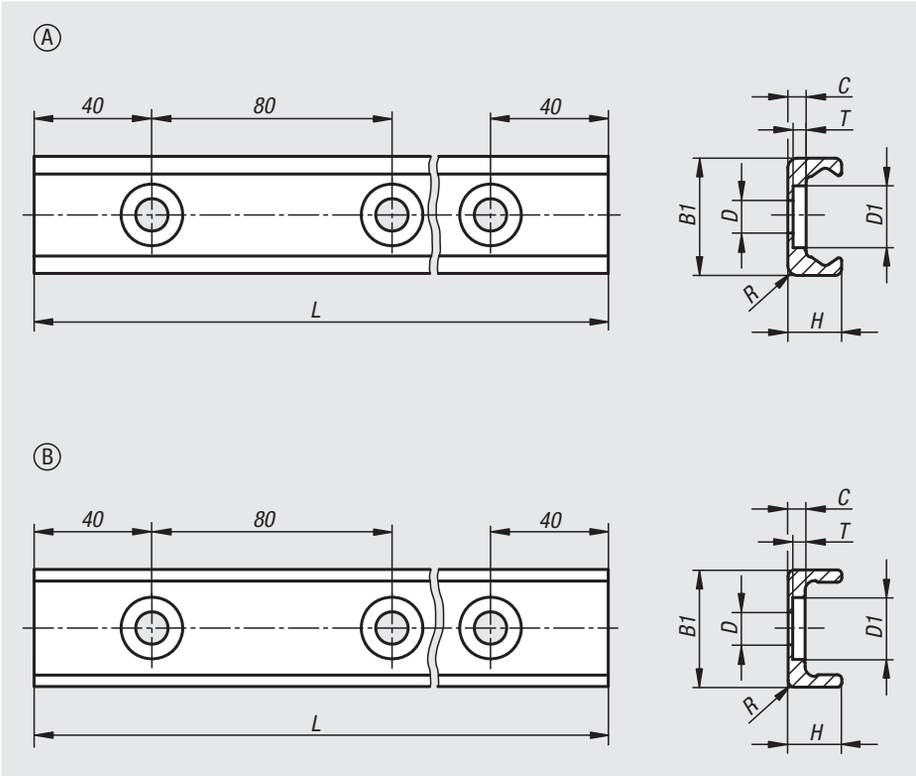

Material:
Ball bearing steel

Version:
Galvanized.
Tracks inductively hardened and ground.

Sample order:
nlm 21322-128X0400 (include length L)

Note for ordering:
Fastening screws are supplied.

Note:
Compact C-profile guide rails with internal hardened tracks. The system runs with low noise even under heavy loads.

There is play between the screw and the fastening hole to allow the rail to be aligned during installation.

To achieve the desired running properties there must always be a film of lubricant between track and roller, this also provides corrosion protection for the ground tracks.

On request:
Lengths up to max. 4080 mm.

Roller guide rails Form A for fixed bearings

Order No.	Form	Size	B1	C	D for screw	D1	H	L	R	T
21322-118X	A	18	18	2,8	M4	9,5	8,25	240/400/560/800/1040/1200	1,5	2
21322-128X	A	28	28	3	M5	11	12,25	400/560/800/1040/1200/1440	1	2
21322-135X	A	35	35	3,5	M6	14,5	16	400/560/800/1040/1200/1440	2	2,7
21322-143X	A	43	43	4,5	M8	18	21	400/560/800/1040/1200/1520/2000	2,5	3,1

Roller guide rails Form B for floating bearings

Order No.	Form	Size	B1	C	D for screw	D1	H	L	R	T
21322-218X	B	18	18	2,6	M4	9,5	8,25	240/400/560/800/1040/1200	1	1,9
21322-228X	B	28	28	3	M5	11	12	400/560/800/1040/1200/1440	1	2
21322-235X	B	35	35	3,5	M6	14,5	16	400/560/800/1040/1200/1440	1	2,7
21322-243X	B	43	43	4,5	M8	18	21	400/560/800/1040/1200/1520/2000	1	3,1

Notes

Linear ball bearing

with internal race

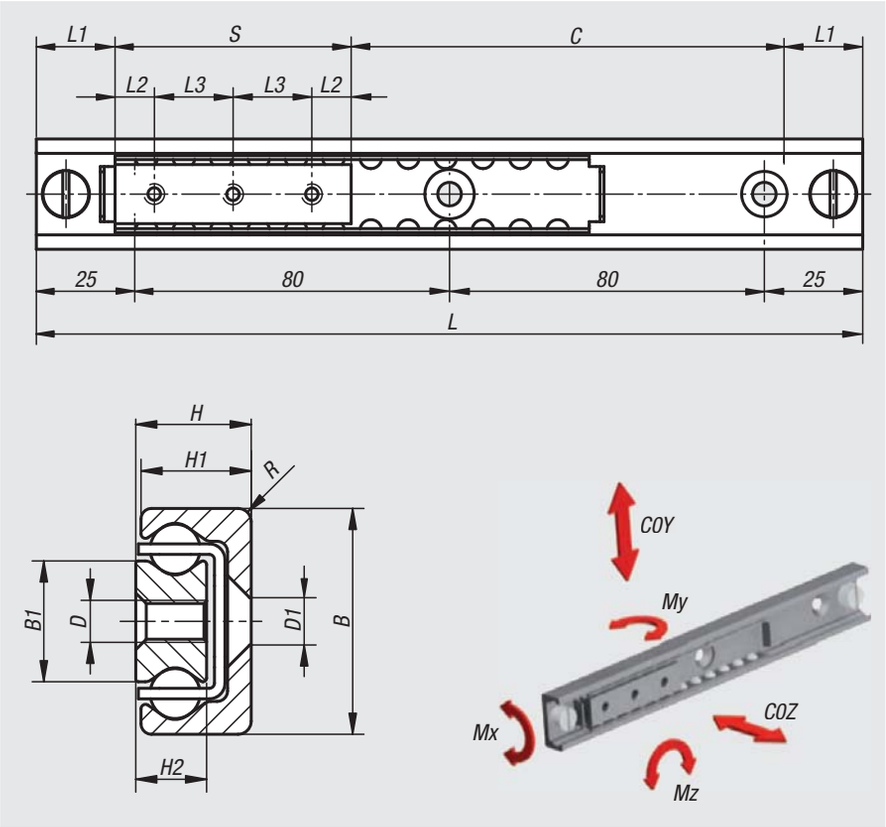

Material:
Rail and race ball-bearing steel.
Balls, ball-bearing steel.
Ball cage steel.

Version:
Rail, runner and ball cage galvanized.
Race inductively hardened.
Balls hardened.

Sample order:
nlm 21330-280600130

Note:
Linear ball bearing consisting of a guide rail and a race which runs within the ball cage in the guide rail. Mounting should be carried out horizontally if possible.

The internal stops limit the cage. Provide external stops for a loaded system.

Use grade 10.9 DIN EN ISO 10642 countersunk head screws to install the rail.

The maximum traversing speed is 0.8 m/s.

Application temperature -30 °C to +170 °C.

Linear ball bearing

with internal race

Order No.	Size	B	B1	C (travel)	D for screw	D1	H	H1	H2	L	L1	L2	L3	R	S	C0Y N	C0Z N	Mx	My	Mz	No. of holes
21330-280600130	28	28	15	30	M5	M5	13	12,25	7,5	130	20	10	20	1	60	3480	2436	17,1	24	35	3
21330-280600210	28	28	15	110	M5	M5	13	12,25	7,5	210	20	10	20	1	60	3480	2436	17,1	24	35	3
21330-280600290	28	28	15	190	M5	M5	13	12,25	7,5	290	20	10	20	1	60	3480	2436	17,1	24	35	3
21330-280600370	28	28	15	270	M5	M5	13	12,25	7,5	370	20	10	20	1	60	3480	2436	17,1	24	35	3
21330-280800290	28	28	15	170	M5	M5	13	12,25	7,5	290	20	10	20	1	80	4640	3248	22,7	43	62	4
21330-280800370	28	28	15	250	M5	M5	13	12,25	7,5	370	20	10	20	1	80	4640	3248	22,7	43	62	4
21330-280800450	28	28	15	330	M5	M5	13	12,25	7,5	450	20	10	20	1	80	4640	3248	22,7	43	62	4
21330-280800610	28	28	15	490	M5	M5	13	12,25	7,5	610	20	10	20	1	80	4640	3248	22,7	43	62	4
21330-281300290	28	28	15	120	M5	M5	13	12,25	7,5	290	20	25	80	1	130	7540	5278	36,9	114	163	2
21330-281300370	28	28	15	200	M5	M5	13	12,25	7,5	370	20	25	80	1	130	7540	5278	36,9	114	163	2
21330-281300450	28	28	15	280	M5	M5	13	12,25	7,5	450	20	25	80	1	130	7540	5278	36,9	114	163	2
21330-281300610	28	28	15	440	M5	M5	13	12,25	7,5	610	20	25	80	1	130	7540	5278	36,9	114	163	2
21330-281300690	28	28	15	520	M5	M5	13	12,25	7,5	690	20	25	80	1	130	7540	5278	36,9	114	163	2
21330-282100450	28	28	15	200	M5	M5	13	12,25	7,5	450	20	25	80	1	210	12180	8526	59,7	298	426	3
21330-282100610	28	28	15	360	M5	M5	13	12,25	7,5	610	20	25	80	1	210	12180	8526	59,7	298	426	3
21330-282101010	28	28	15	760	M5	M5	13	12,25	7,5	1010	20	25	80	1	210	12180	8526	59,7	298	426	3
21330-351300290	35	35	15,8	110	M6	M6	17	16	10	290	25	25	80	2	130	9750	6825	47,2	148	211	2
21330-351300450	35	35	15,8	270	M6	M6	17	16	10	450	25	25	80	2	130	9750	6825	47,2	148	211	2
21330-351300770	35	35	15,8	590	M6	M6	17	16	10	770	25	25	80	2	130	9750	6825	47,2	148	211	2
21330-352100450	35	35	15,8	190	M6	M6	17	16	10	450	25	25	80	2	210	15750	11025	76,3	386	551	3
21330-352100690	35	35	15,8	430	M6	M6	17	16	10	690	25	25	80	2	210	15750	11025	76,3	386	551	3
21330-352101010	35	35	15,8	750	M6	M6	17	16	10	1010	25	25	80	2	210	15750	11025	76,3	386	551	3
21330-352900610	35	35	15,8	270	M6	M6	17	16	10	610	25	25	80	2	290	21750	15225	105,3	736	1051	4
21330-352900930	35	35	15,8	590	M6	M6	17	16	10	930	25	25	80	2	290	21750	15225	105,3	736	1051	4
21330-352901330	35	35	15,8	990	M6	M6	17	16	10	1330	25	25	80	2	290	21750	15225	105,3	736	1051	4
21330-432100450	43	43	23	190	M8	M8	22	21	13,5	450	25	25	80	2,5	210	22470	15729	155,1	551	786	3
21330-432100690	43	43	23	430	M8	M8	22	21	13,5	690	25	25	80	2,5	210	22470	15729	155,1	551	786	3
21330-432101010	43	43	23	750	M8	M8	22	21	13,5	1010	25	25	80	2,5	210	22470	15729	155,1	551	786	3
21330-433700770	43	43	23	350	M8	M8	22	21	13,5	770	25	25	80	2,5	370	39590	27713	273,2	1709	2441	5
21330-433701010	43	43	23	590	M8	M8	22	21	13,5	1010	25	25	80	2,5	370	39590	27713	273,2	1709	2441	5
21330-433701490	43	43	23	1070	M8	M8	22	21	13,5	1490	25	25	80	2,5	370	39590	27713	273,2	1709	2441	5

Telescopic rails

Double-T form

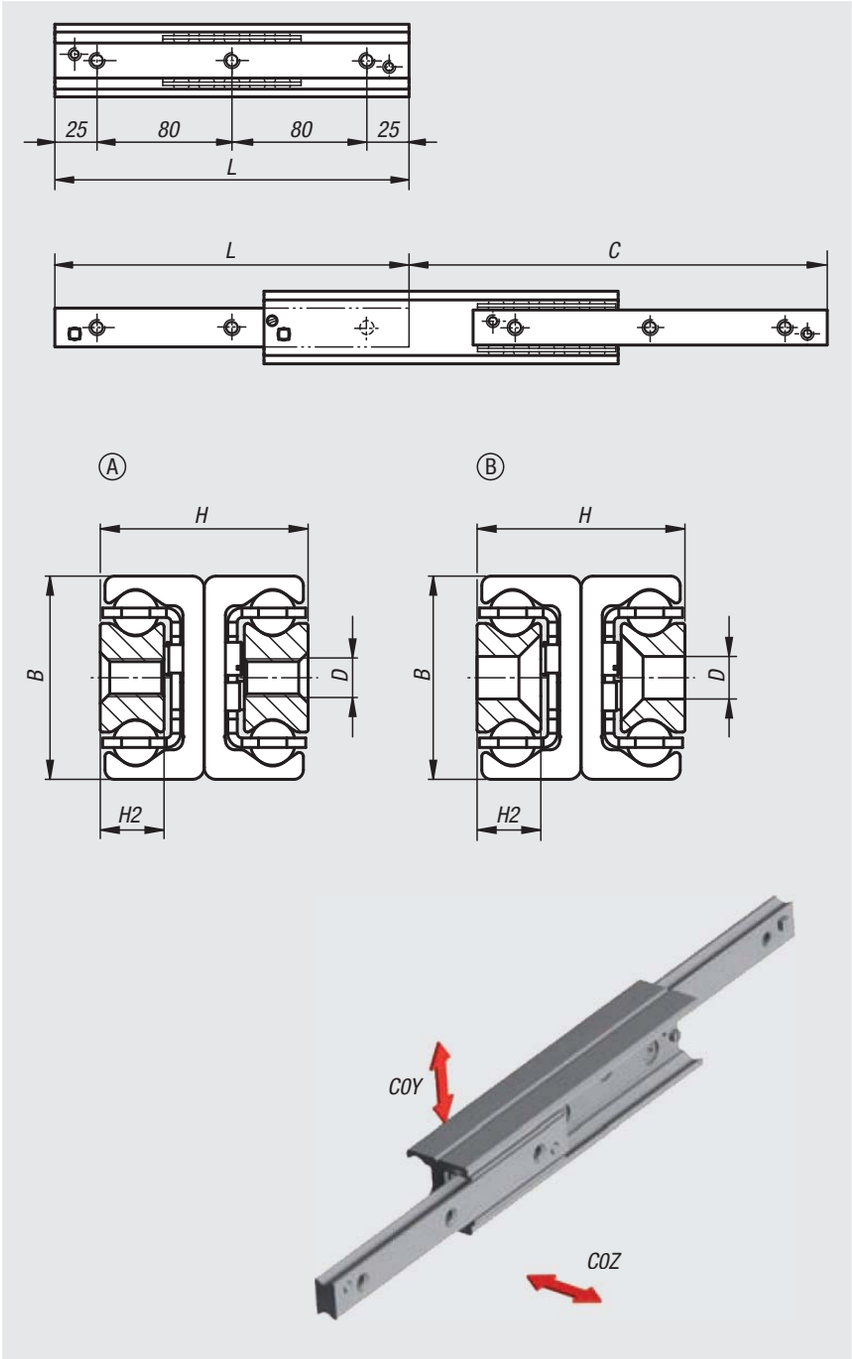

Material:
Rail and race ball-bearing steel.
Balls, ball-bearing steel.
Ball cage steel.

Version:
Rail, runner and ball cage galvanized.
Race inductively hardened.
Balls hardened.

Sample order:
nlm 21336-1280210

Note:
Full extension consisting of two guide rails which form the intermediate element when connected to each other to form a double T profile, plus two runners which form the link to the connection construction as fixed and moving elements. High load rating and low bending thanks to compact, square design with high base load. The maximum travel is greater than the closed length of the telescopic rail. Mounting should be carried out horizontally if possible. To allow access to all fastening holes, the locking screw in the rail must be removed before mounting and replaced afterwards. Travel in both directions is achieved by removing the locking screws.

The internal stops limit the cage. Provide external stops for a loaded system.

Form A:
Use grade 10.9 DIN EN ISO 10642 countersunk head screws to install the rail.
Form B:
Use grade 10.9 screws to install the rail.

The maximum traversing speed is 0.8 m/s.

Application temperature -30 °C to +170 °C.

Telescopic rails

Double-T form

Order No.	Form	Version	Size	B	C (travel)	D	D for screw	H	H2	L	C0Y N	C0Z N	No. of holes
21336-1280210	A	tapped hole	28	28	232	M5	-	26	7,5	210	432	302	3
21336-1280370	A	tapped hole	28	28	380	M5	-	26	7,5	370	968	471	5
21336-1280450	A	tapped hole	28	28	464	M5	-	26	7,5	450	1169	385	6
21336-1280530	A	tapped hole	28	28	548	M5	-	26	7,5	530	1107	325	7
21336-1350370	A	tapped hole	35	35	406	M6	-	34	10	370	1025	718	5
21336-1350450	A	tapped hole	35	35	494	M6	-	34	10	450	1250	793	6
21336-1350530	A	tapped hole	35	35	558	M6	-	34	10	530	1685	728	7
21336-1350610	A	tapped hole	35	35	646	M6	-	34	10	610	1908	626	8
21336-1430450	A	tapped hole	43	43	486	M8	-	44	13,5	450	1828	1279	6
21336-1430530	A	tapped hole	43	43	556	M8	-	44	13,5	530	2375	1434	7
21336-1430610	A	tapped hole	43	43	626	M8	-	44	13,5	610	2934	1300	8
21336-1430770	A	tapped hole	43	43	796	M8	-	44	13,5	770	3055	1016	10
21336-1430930	A	tapped hole	43	43	966	M8	-	44	13,5	930	2506	833	12
21336-2280210	B	countersink	28	28	232	-	M5	26	7,5	210	432	302	3
21336-2280370	B	countersink	28	28	380	-	M5	26	7,5	370	968	471	5
21336-2280450	B	countersink	28	28	464	-	M5	26	7,5	450	1169	385	6
21336-2280530	B	countersink	28	28	548	-	M5	26	7,5	530	1107	325	7
21336-2350370	B	countersink	35	35	406	-	M6	34	10	370	1025	718	5
21336-2350450	B	countersink	35	35	494	-	M6	34	10	450	1250	793	6
21336-2350530	B	countersink	35	35	558	-	M6	34	10	530	1685	728	7
21336-2350610	B	countersink	35	35	646	-	M6	34	10	610	1908	626	8
21336-2430450	B	countersink	43	43	486	-	M8	44	13,5	450	1828	1279	6
21336-2430530	B	countersink	43	43	556	-	M8	44	13,5	530	2375	1434	7
21336-2430610	B	countersink	43	43	626	-	M8	44	13,5	610	2934	1300	8
21336-2430770	B	countersink	43	43	796	-	M8	44	13,5	770	3055	1016	10
21336-2430930	B	countersink	43	43	966	-	M8	44	13,5	930	2506	833	12

Telescopic rails

double arrangement

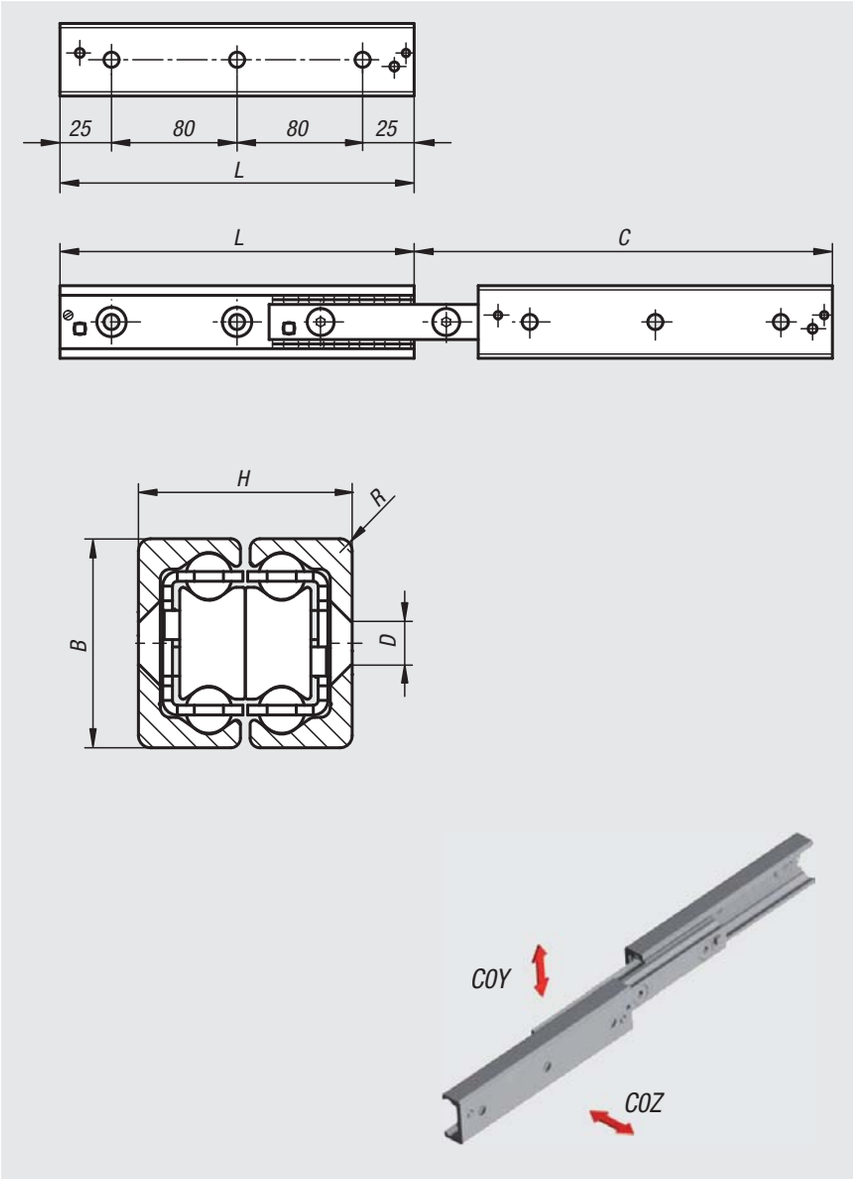

Material:
Rail and race ball-bearing steel.
Balls, ball-bearing steel.
Ball cage steel.

Version:
Rail, runner and ball cage galvanized.
Race inductively hardened.
Balls hardened.

Sample order:
nlm 21338-280210

Note:
Full extension consisting of two guide rails which serve as fixed and moving elements and two runners which form the intermediate element when connected to each other. This arrangement offers good protection for the open ball cages from dirt. The maximum travel is greater than the closed length of the telescopic rail. Mounting should be carried out horizontally if possible. To allow access to all fastening holes, the locking screw in the rail must be removed before mounting and replaced afterwards. Travel in both directions is achieved by removing the locking screws.

The internal stops limit the cage. Provide external stops for a loaded system.

Use grade 10.9 DIN EN ISO 10642 countersunk head screws to install the rail.

The maximum traversing speed is 0.8 m/s.

Application temperature -30 °C to +170 °C.

Order No.	Size	B	C (travel)	D for screw	H	L	R	C0Y N	C0Z N	No. of holes
21338-280210	28	28	232	M5	26	210	1	432	302	3
21338-280370	28	28	380	M5	26	370	1	482	482	5
21338-280450	28	28	434	M5	26	450	1	393	393	6
21338-280530	28	28	548	M5	26	530	1	332	332	7
21338-350370	35	35	406	M6	34	370	2	522	522	5
21338-350450	35	35	494	M6	34	450	2	429	429	6
21338-350530	35	35	558	M6	34	530	2	394	394	7
21338-350610	35	35	646	M6	34	610	2	338	338	8
21338-430450	43	43	486	M8	44	450	2,5	1331	1279	6
21338-430530	43	43	556	M8	44	530	2,5	1193	1193	7
21338-430610	43	43	626	M8	44	610	2,5	1082	1082	8
21338-430770	43	43	796	M8	44	770	2,5	845	845	10
21338-430930	43	43	966	M8	44	930	2,5	693	693	12

Telescope rails

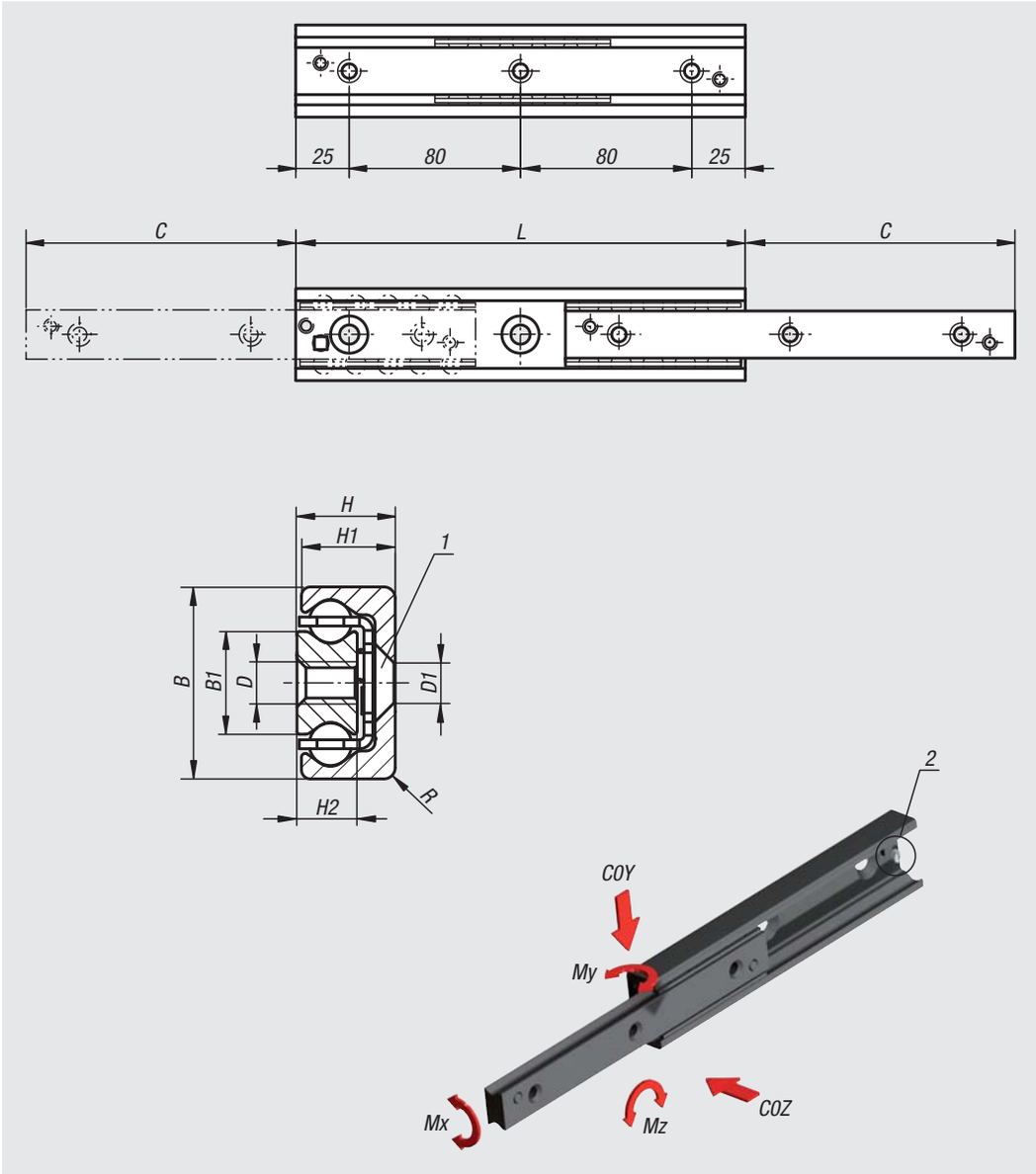

Material:
Balls, rails and slides roller bearing steel.

Version:
Rail and slide galvanized.
Tracks inductively hardened.
Balls hardened.

Sample order:
nlm 21340-280290

Note:
Partial extension consisting of a fixed guide rail and a movable slider. The slide can move somewhat more than half the length of the rail (C travel). By removing the locking screw, a partial extension with the travel length C is possible to both sides. The total travel is thus 2C.
This compact and simple construction allows very high load ratings.
The maximum traversing speed is 0.8 m/s.

Application temperature -30 °C to +170 °C.

On request:
Other lengths (pitch 80 mm).
Size 28 up to max. 1170 mm.
Size 35 up to max. 1490 mm.
Size 43 up to max. 1970 mm.

Drawing reference:
1) for countersunk screw DIN 7991
2) set screw

Order No.	Size	B	B1	C (travel)	D	D1	H	H1	H2	L	R	C0Y N	C0Z N	Mx Nm	My Nm	Mz Nm	No. of holes
21340-280290	28	28	15	148	M5	M5	13	12,25	7,5	290	1	1934	1345	39,6	132	188	4
21340-280370	28	28	15	190	M5	M5	13	12,25	7,5	370	1	2445	1711	50,4	213	305	5
21340-280450	28	28	15	232	M5	M5	13	12,25	7,5	450	1	2955	2069	61,2	314	449	6
21340-280530	28	28	15	274	M5	M5	13	12,25	7,5	530	1	3466	2426	72	435	621	7
21340-280610	28	28	15	315	M5	M5	13	12,25	7,5	610	1	3986	2790	82,8	575	821	8
21340-350290	35	35	15,8	159	M6	M6	17	16	10	290	2	2060	1442	46,9	146	208	4
21340-350370	35	35	15,8	203	M6	M6	17	16	10	370	2	2638	1847	59,9	238	340	5
21340-350450	35	35	15,8	247	M6	M6	17	16	10	450	2	3217	2252	73	345	505	6
21340-350530	35	35	15,8	279	M6	M6	17	16	10	530	2	4282	2997	90,4	543	775	7
21340-350610	35	35	15,8	323	M6	M6	17	16	10	610	2	4858	3401	103,5	711	1015	8
21340-430290	43	43	23	158	M8	M8	22	21	13,5	290	2,5	2872	2010	93,8	201	288	4
21340-430370	43	43	23	208	M8	M8	22	21	13,5	370	2,5	3377	2364	115,9	308	440	5
21340-430450	43	43	23	243	M8	M8	22	21	13,5	450	2,5	4690	3283	149,2	509	728	6
21340-430530	43	43	23	278	M8	M8	22	21	13,5	530	2,5	6039	4227	182,4	762	1088	7
21340-430610	43	43	23	313	M8	M8	22	21	13,5	610	2,5	7411	5188	215,6	1064	1521	8

Telescope rails

S-form

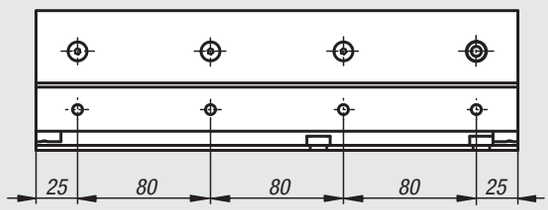

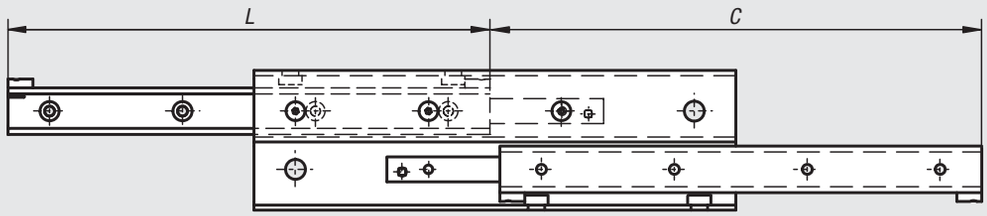

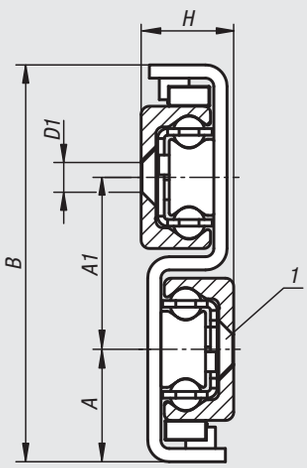

Material:
Balls, rails and runners roller bearing steel.

Version:
Rail and runner galvanized.
Tracks inductive hardened.
Balls hardened.

Sample order:
nlm 21342-280290

Note:
Full extension consisting of two guide rails as fixed and moving elements and an S-shaped intermediate element. The latter has a high area moment of inertia and high rigidity with a slim construction. This results in a high load rating with a low amount of bending in the extended state. The maximum travel is greater than the closed length of the telescopic rail.

Use grade 10.9 DIN EN ISO 10642 countersunk head screws to install the rail.
The maximum traversing speed is 0.8 m/s.

Application temperature -30 °C to +110 °C.

On request:
Other lengths (steps 80 mm).
Size 28 up to max. 1490 mm.
Size 43 up to max. 1970 mm.

Drawing reference:
1) for countersunk screw DIN 7991

Telescope rails

S-form

Order No.	Size	A	A1	B	C (travel)	D1	H	L	C0Y N	No. of holes
21342-280290	28	24,5	36	85	296	M5	17	290	570	4 (3 accessible)
21342-280370	28	24,5	36	85	380	M5	17	370	769	5 (4 accessible)
21342-280450	28	24,5	36	85	464	M5	17	450	969	6 (4 accessible)
21342-280530	28	24,5	36	85	548	M5	17	530	1170	7 (6 accessible)
21342-280610	28	24,5	36	85	630	M5	17	610	1376	8 (6 accessible)
21342-350450	35	30,5	43	104	494	M6	22,5	450	1250	6 (5 accessible)
21342-350530	35	30,5	43	104	558	M6	22,5	530	1685	7 (6 accessible)
21342-350690	35	30,5	43	104	734	M6	22,5	690	2132	9 (7 accessible)
21342-350850	35	30,5	43	104	886	M6	22,5	850	2801	11 (9 accessible)
21342-430530	43	34	52	120	556	M8	28	530	2061	7 (6 accessible)
21342-430610	43	34	52	120	626	M8	28	610	2603	8 (6 accessible)
21342-430690	43	34	52	120	726	M8	28	690	2775	9 (7 accessible)
21342-430770	43	34	52	120	796	M8	28	770	3319	10 (7 accessible)
21342-430850	43	34	52	120	866	M8	28	850	3873	11 (9 accessible)
21342-431010	43	34	52	120	1036	M8	34	1010	4590	13 (10 accessible)
21342-431490	43	34	52	120	1516	M8	34	1490	3713	19 (15 accessible)

Technical Information for profile guide rails

A profile guide rail allow linear motion with the aid of bearing balls. Using balls between rails and carriage allows a profile guide rail to attain extremely precise linear motion. Compared to a conventional glide rails the coefficient of friction is only one fiftieth.

The ball row arrangement based on two-point contact with four ball arrays always at a 45° contact angle lends the profile guide rail consistent load ratings in all primary directions with excellent running properties. The profile guide rail can be mounted in various positions for diverse applications.

Profile guide rails of the same size can be exchanged with each other allowing individual carriages or rails to be exchanged or added to at any time. Our profile guide rails correspond to the market standard and can replace linear guides of the same design by other manufacturers.

Accuracy Classes

Profile guide rails are available in three accuracy classes. The maximum relative tolerance of each accuracy class is specified.

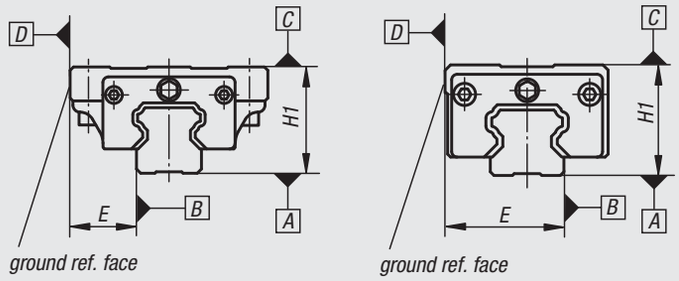

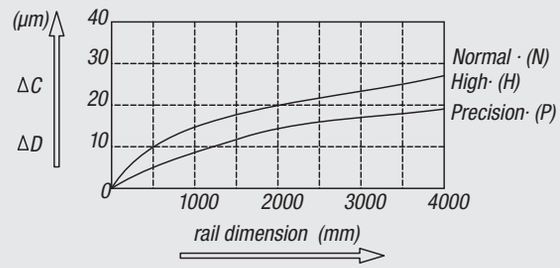

		Accuracy Class		
		Normal (N)	High(H)	Precision (P)
maximum deviation for systems with one carriage	height tolerance H1	±0,1	±0,04	-0,04
	length tolerance E	±0,1	±0,04	-0,04
maximum deviation for systems with several carriages	Δ H1	0,03	0,02	0,01
	Δ E	0,03	0,02	0,01
run parallelism of face C in relation to face A		see diagram		
run parallelism of face D in relation to face B		see diagram		

Pretensioning Classes

With regard to the diverse requirements of the user, profile guide rails are available in four different pre-load classes. A higher pre-load improves the rigidity and reduces the elastic deformation during load changes.

Class	Preload	Preload force	Applications with	Examples
Z0	no preload	0	- constant load direction - imprecise mounting surface	- linear axis - push and pull equipment
Z1	light preloading	0,02 C (C = dynamic load rating)	- constant load direction - light impacts and vibrations - low loading	- engraving machines - packaging machines - industrial handling
Z2	medium preloading	0,05 C (C = dynamic load rating)	- high precision requirements - torque loading	- positioning units - fast feeding units - metrology
Z3	heavy preloading	0,07 C (C = dynamic load rating)	- high rigidity requirements - impacts and vibrations - heavy loading	- machining centres - grinders - large boring machines

Calculating the service life

The nominal service life L can be calculated from the following equation:

$$L = \left(\frac{C_{dyn}}{P}\right)^3 \cdot 50000 \text{ m}$$

L = nominal service life (m)
C_{dyn} = dynamic load rating (N)
P = dynamic equivalent load (N)

Carriages

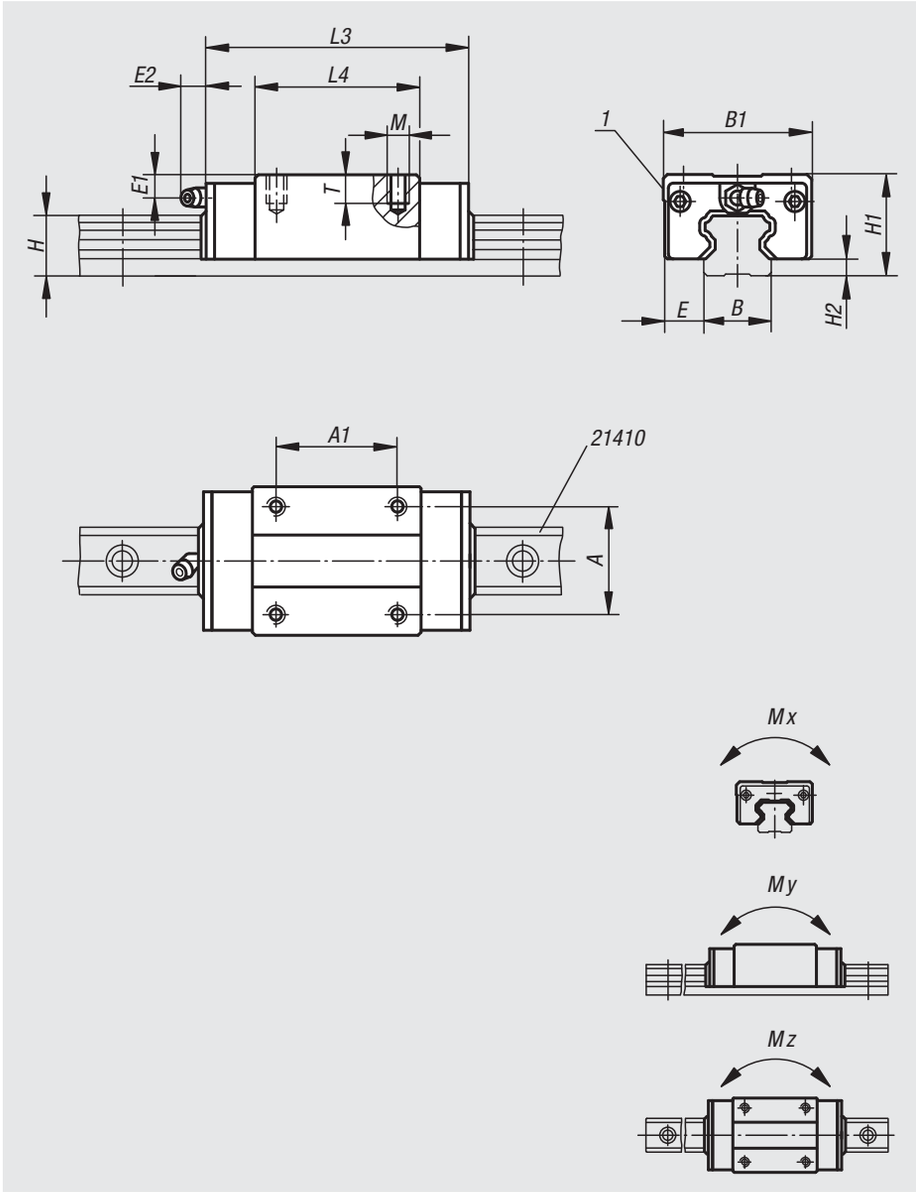

Material:
Body carbon steel.
Balls roller bearing steel.
Diverters plastic.

Version:
Bright.

Sample order:
nlm 21400-15106601

Note:
Standard guide carriage with recirculating ball guidance precision N not preloaded (Z0). With double-sided end seal. 4-row versions with round arch profile. The profile guide rail tracks are arranged at 45° and can accept loads from all directions.

High dynamic values: v = 5 m/s.

Applicable temperature in continuous use max. 80 °C.

On request:
Various precision and preload classes.

Drawing reference:
1) ground ref. edge

Order No.	Version	Size	Mx Nm	My Nm	Mz Nm	Dynamic load rating N	Static load rating N	Lubrication hole
21400-15106601	standard	15	70	50	50	6850	12700	Ø3
21400-20107801	standard	20	220	180	180	14500	25600	M6x1
21400-25108801	standard	25	360	320	310	21400	40000	M6x1
21400-30110901	standard	30	600	500	490	29800	54900	M6x1
21400-25211001	long	25	504	448	434	29960	56000	M6x1
21400-30213101	long	30	785	650	650	39000	71900	M6x1

Order No.	Version	Size	A	A1	B	B1	E	E1	E2	H	H1	H2	L3	L4	M	T
21400-15106601	standard	15	26	26	15	34	9,5	8,3	5	14	28	4,6	66	40	M4	6,4
21400-20107801	standard	20	32	36	20	44	12	7	13,5	18	30	5	77,8	48,8	M5	8
21400-25108801	standard	25	35	35	23	48	12,5	11	13,5	22	40	7	88	57	M6	9,6
21400-30110901	standard	30	40	40	28	60	16	10	13	26	45	9	109	72	M8	12,8
21400-25211001	long	25	35	50	23	48	12,5	11	13,5	22	40	7	110,1	79,1	M6	9,6
21400-30213101	long	30	40	60	28	60	16	10	13	26	45	9	131,3	94,3	M8	12,8

Carriages

with flange

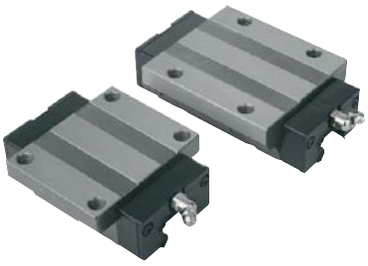

Material:
Body carbon steel.
Balls roller bearing steel.
Diverters plastic.

Version:
Bright.

Sample order:
nlm 21402-15106601

Note:
Guide carriage with flange with recirculating ball guidance precision N not preloaded (Z0). With double-sided end seal. 4-row versions with round arch profile. The profile guide rail tracks are arranged at 45° and can accept loads from all directions.

High dynamic values: v = 5 m/s.

Applicable temperature in continuous use max. 80 °C.

On request:
Various precision and preload classes.

Drawing reference:
1) ground ref. edge

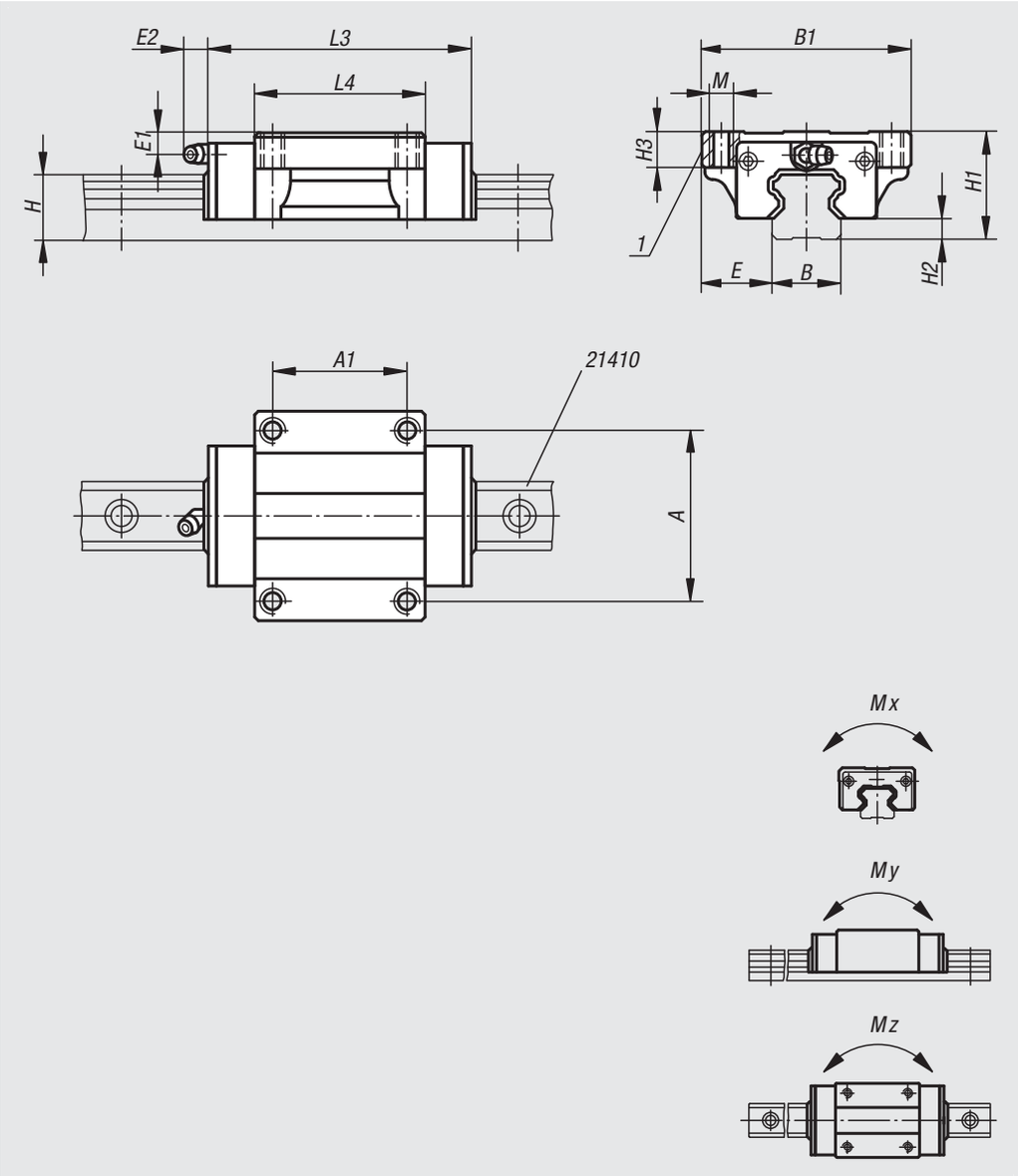

Order No.	Version	Size	Mx Nm	My Nm	Mz Nm	Dynamic load rating N	Static load rating N	Lubrication hole
21402-15106601	standard	15	70	50	50	6850	12700	Ø3
21402-20107801	standard	20	220	180	180	14500	25600	M6x1
21402-25108801	standard	25	360	320	310	21400	40000	M6x1
21402-30110901	standard	30	600	500	490	29800	54900	M6x1
21402-25211001	long	25	504	448	434	29960	56000	M6x1
21402-30213101	long	30	785	650	650	39000	71900	M6x1

Order No.	Version	Size	A	A1	B	B1	E	E1	E2	H	H1	H2	H3	L3	L4	M
21402-15106601	standard	15	38	30	15	47	16	4,3	5	14	24	4,6	8	66	40	M5
21402-20107801	standard	20	53	40	20	63	21,5	5	13,5	18	30	5	9	77,8	48,8	M6
21402-25108801	standard	25	57	45	23	70	23,5	5	13,5	22	36	7	12	88	57	M8
21402-30110901	standard	30	72	52	28	90	31	7	13	26	42	9	12	109	72	M10
21402-25211001	long	25	57	45	23	70	23,5	5	13,5	22	36	7	12	110,1	79,1	M8
21402-30213101	long	30	72	52	28	90	31	7	13	26	42	9	12	131,3	94,3	M10

Carriages

compact

Material:
Body carbon steel.
Balls roller bearing steel.
Diverters plastic.

Version:
Bright.

Sample order:
nlm 21404-15106601

Note:
Compact guide carriage with recirculating ball guidance precision N not preloaded (Z0). With double-sided end seal. 4-row versions with round arch profile. The profile guide rail tracks are arranged at 45° and can accept loads from all directions.

High dynamic values: v = 5 m/s.

Applicable temperature in continuous use max. 80 °C.

On request:
Various precision and preload classes.

Drawing reference:
1) ground ref. edge

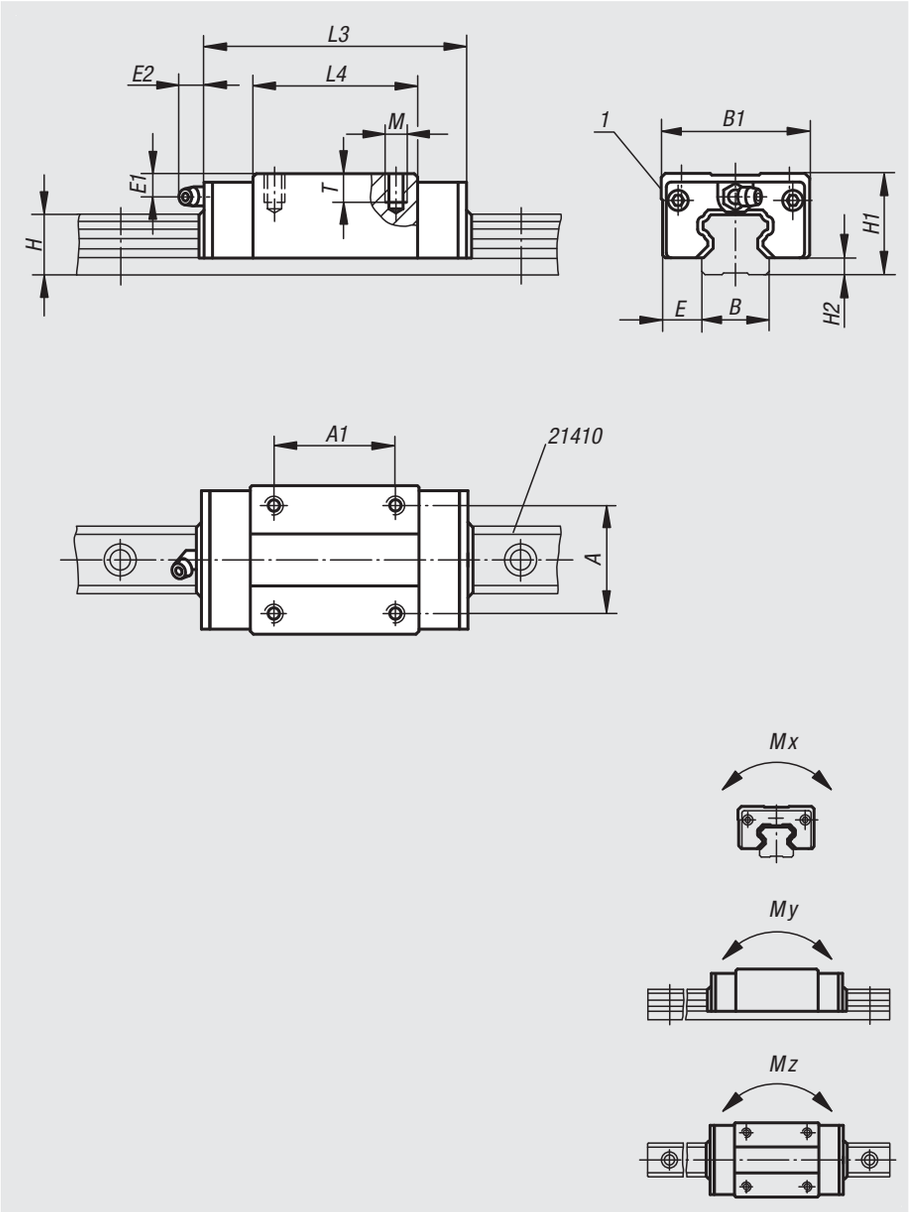

Order No.	Size	Mx Nm	My Nm	Mz Nm	Dynamic load rating N	Static load rating N	Lubrication hole
21404-15106601	15	70	50	50	6850	12700	Ø3
21404-20107801	20	220	180	180	14500	25600	M6x1
21404-25108801	25	360	320	310	21400	40000	M6x1
21404-30110901	30	600	500	490	29800	54900	M6x1

Order No.	Size	A	A1	B	B1	E	E1	E2	H	H1	H2	L3	L4	M	T
21404-15106601	15	26	26	15	34	9,5	4,3	5	14	24	4,6	66	40	M4	5,6
21404-20107801	20	32	32	20	42	11	5	13,5	18	28	5	77,8	48,8	M5	7
21404-25108801	25	35	35	23	48	12,5	4,8	13,5	22	33	7	88	57	M6	8,4
21404-30110901	30	40	40	28	60	16	7	13	26	42	9	109	72	M8	11,2

Carriages

compact, short

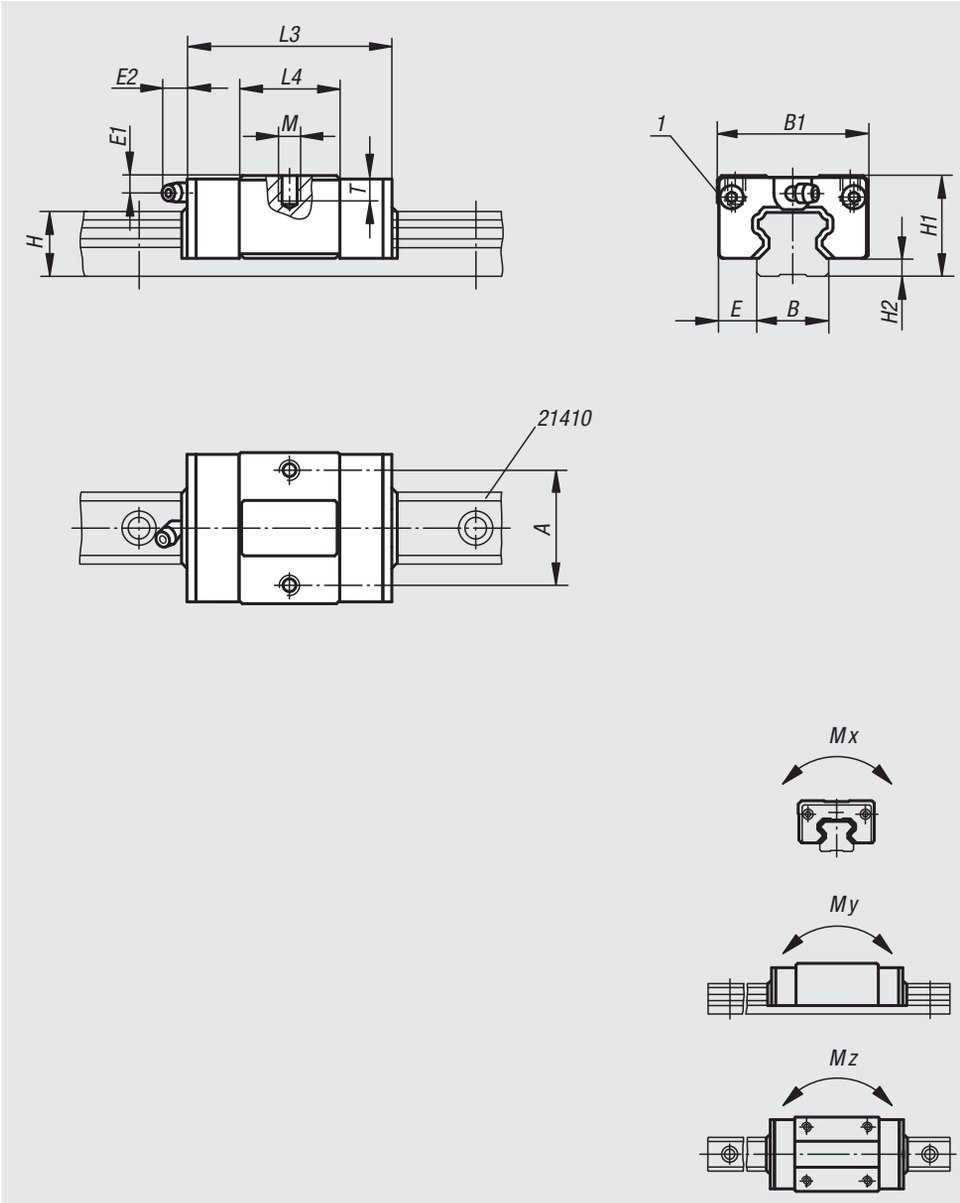

Material:
Body carbon steel.
Balls roller bearing steel.
Diverters plastic.

Version:
Bright.

Sample order:
nlm 21406-15004801

Note:
Compact guide carriage with recirculating ball guide precision N not preloaded (Z0). With double-sided end seal. 4-row versions with round arch profile. The profile guide rail tracks are arranged at 45° and can accept loads from all directions.

High dynamic values: v = 5 m/s.

Applicable temperature in continuous use max. 80 °C.

On request:
Various precision and preload classes.

Drawing reference:
1) ground ref. edge

Order No.	Size	Mx Nm	My Nm	Mz Nm	Dynamic load rating N	Static load rating N	Lubrication hole
21406-15004801	15	40	28	28	3900	7250	Ø3
21406-20005801	20	126	103	103	8300	14700	M6x1
21406-25006301	25	200	175	172	11900	22300	M6x1
21406-30007601	30	320	270	270	15950	29400	M6x1

Order No.	Size	A	B	B1	E	E1	E2	H	H1	H2	L3	L4	M	T
21406-15004801	15	26	15	34	9,5	4,3	5	14	24	4,6	47,6	21,6	M4	5,6
21406-20005801	20	32	20	42	11	5	13,5	18	28	5	58	28	M5	7
21406-25006301	25	35	23	48	12,5	4,8	13,5	22	33	7	62,5	31,5	M6	8,4
21406-30007601	30	40	28	60	16	7	13	26	42	9	75,6	38,6	M8	11,2

Profile guide rails

Material:
Steel.

Version:
Tracks inductively hardened and ground.

Sample order:
nlm 21410-1520X0520

Note:
Profile guide rails can be screwed on from above. The profile guide rails are available in four sizes and one or more carriages can be assembled on them. 4-row versions with round arch profile. The tracks of the profile guide rails are set below an angle of 45° and thus can carry loads from all directions.

The profile guide rails correspond to the market standard and can replace linear guides of the same design by other manufacturers.

On request:
Lengths up to a max. 3960 mm.

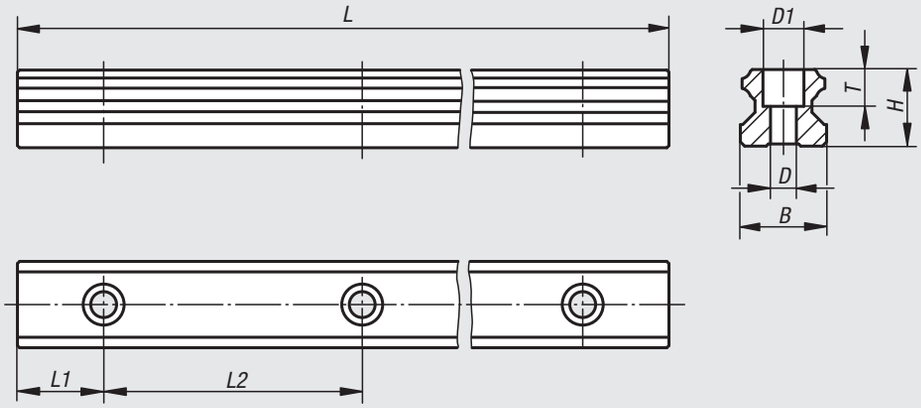

Enables the arrangement of profile guide rails with carriages to form a guide system.

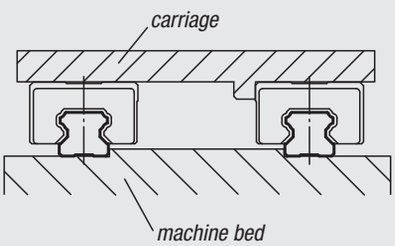

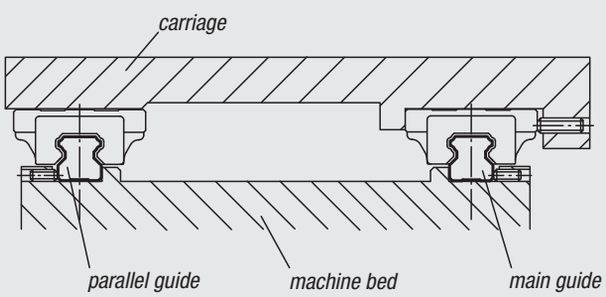

Order No.	Size	B	D	D1	H	L	L1	L2	T
21410-1520X0520	15	15	4,5	7,5	14	520	20	60	5,3
21410-2020X0520	20	20	6	9,5	18	520	20	60	8,5
21410-2520X0520	25	23	7	11	22	520	20	60	9
21410-3020X0520	30	28	9	14	26	520	20	80	12

Miniature carriages

stainless steel

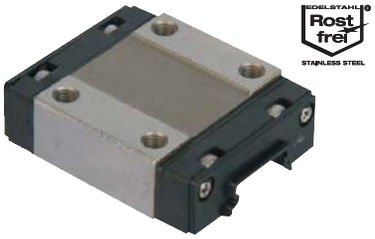

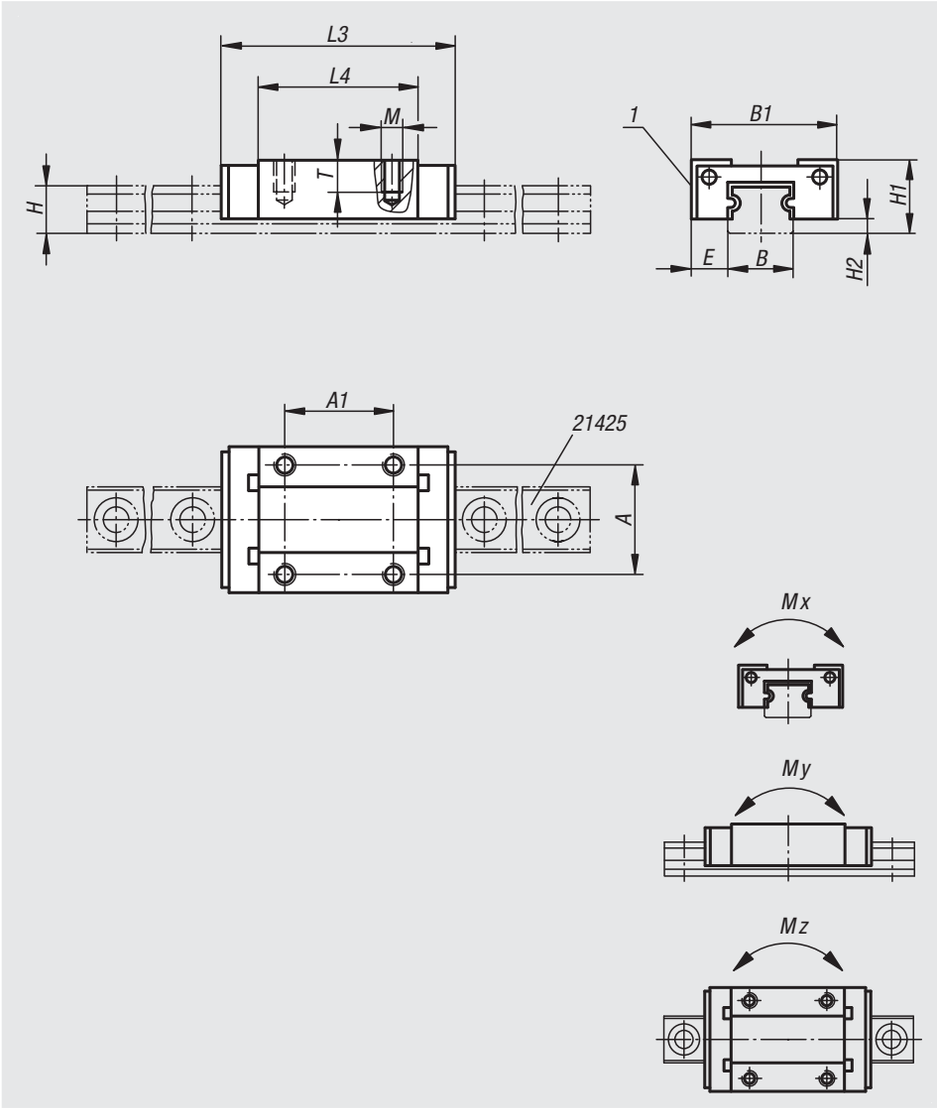

Material:
Body and ball stainless steel 1.4034.
Diverter plastic.

Version:
Bright.

Sample order:
nlm 21420-07102301

Note:
Standard miniature guide carriage with recirculating ball guide precision N not preloaded (Z0). With double-sided end seal.
4-point ball recirculating ball system with equal load angles and 2 recirculating ball guides per carriage allowing loads to be accepted uniformly from all sides.

Max. acceleration: 80 m/s².
Maximum traverse speed 3 m/s.
Application temperature -20 °C to +80 °C.

Attention:
Always use the supplied mounting rail as otherwise the ball retainment in the carriage is not guaranteed.

Drawing reference:
1) ground ref. edge

Order No.	Version	Size	Mx Nm	My Nm	Mz Nm	Dynamic load rating N	Static load rating N
21420-07102301	Standard	7	5,1	2,55	2,55	880	1370
21420-09103101	Standard	9	10,4	5,1	5,1	1470	2250
21420-12103501	Standard	12	14,7	8,04	8,72	2665	4020
21420-15104301	Standard	15	30,2	16,5	17,9	4410	6570

Order No.	Version	Size	A	A1	B	B1	E	H	H1	H2	L3	L4	M	T
21420-07102301	Standard	7	12	8	7	17	5	4,7	8	1,5	23,5	13,5	M2	2,5
21420-09103101	Standard	9	15	10	9	20	5,5	5,5	10	2,2	31	20	M3	3
21420-12103501	Standard	12	20	15	12	27	7,5	7,5	13	3	35	20,8	M3	3,5
21420-15104301	Standard	15	25	20	15	32	8,5	9,5	16	4	43	25,7	M3	4

Miniature profile guide rails

stainless steel

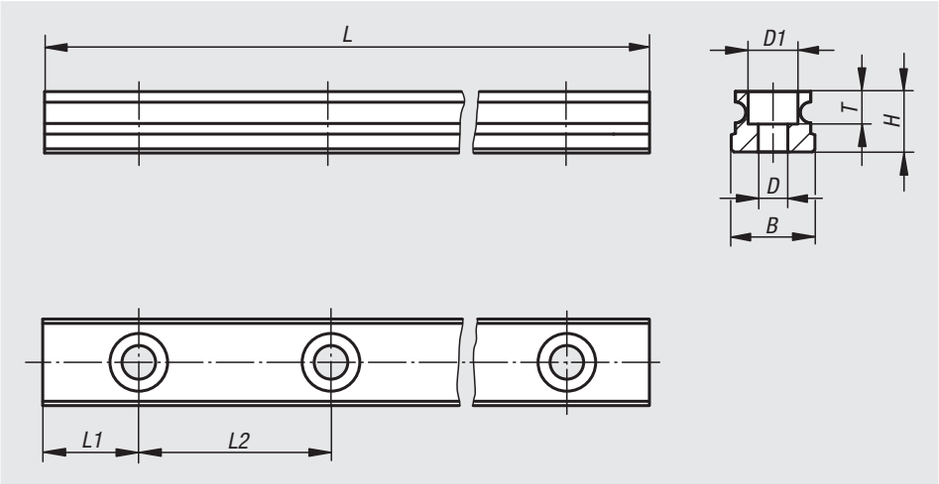

Material:
Stainless steel 1.4034

Version:
Bright.
Hardened 52 HRC.

Sample order:
nlm 21425-0705X0240

Note:
Profile guide rails can be screwed on from above. The profile rails, on which one or more carriages can be mounted, are available in four miniature sizes.
4-point ball bearing system with identical load angles and 2 ball bearings per carriage. Thus loads can be uniformly absorbed from all sides.

Max. acceleration: 80 m/s².
Maximum traversing speed 3 m/s.
Application temperature -20 °C to +80 °C.

Combination of the rails is possible.

Order No.	Size	D	D1	H	L max.	L1	L2	B	T
21425-0705X0240	7	2,4	4,2	4,7	240	7,5	15	7	2,3
21425-0907X0495	9	3,5	6	5,5	495	7,5	20	9	3,3
21425-1210X0570	12	3,5	6	7,5	570	10	25	12	4,5
21425-1515X0790	15	3,5	6	9,5	790	15	40	15	4,5

Linear plain bearings

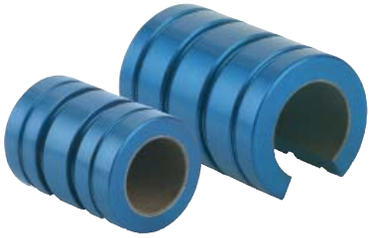

Material:
Housing anodized aluminium.
Bearing surface Frelon (Teflon plus proprietary fillers).

Version:
Linear plain bearing with Frelon coating.

Sample order:
nlm 21495-01-120

Note:
Virtually chemically inert.
Self-lubricating (no additional lubrication required).
High temperature range (-240 °C to +260 °C).
Dampens vibrations.
High static load capacity - projected surface area x P
(P = 1034 N/cm^2)
Suitable for food, pharmaceutical, medical and chemical applications.
Insensitive to dirt.

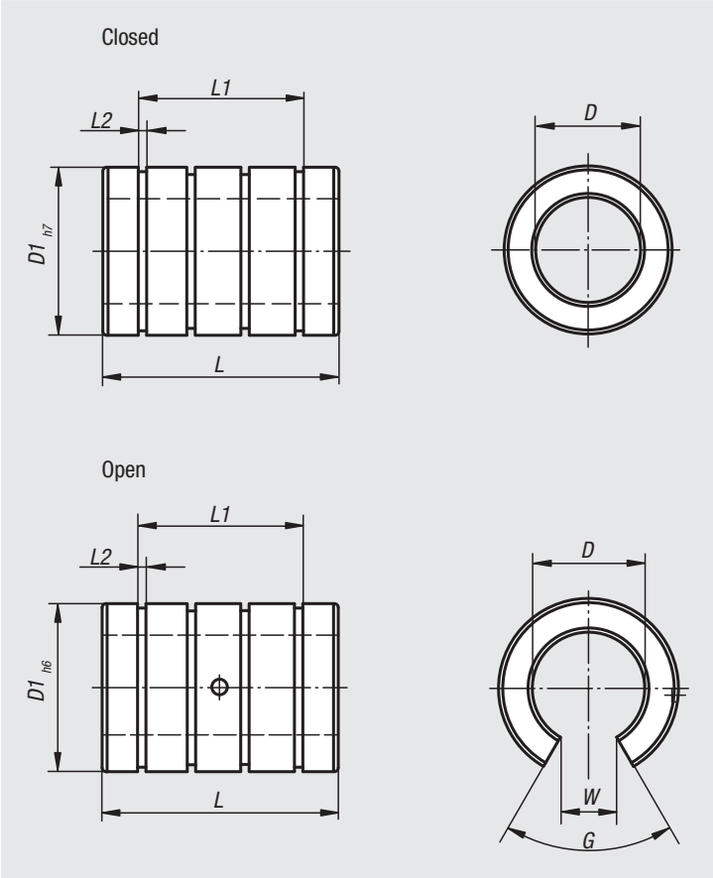

Order No. closed	Order No. open	D	D1	G	L	L1	L2	W
21495-01-120	**21495-01-121**	12,0016+0,0027	22	-78°	32	22,64	1,32	-7,6
21495-01-160	**21495-01-161**	16,0016+0,0027	26	-78°	36	24,64	1,32	-10,4
21495-01-200	**21495-01-201**	20,0020+0,0033	32	-60°	45	31,26	1,63	-10,8
21495-01-250	**21495-01-251**	25,0020+0,0033	40	-60°	58	43,8	1,9	-13,2
21495-01-300	**21495-01-301**	30,0020+0,0033	47	-72°	68	51,8	1,9	-14,2

Linear ball bearings

with plastic cage

Material:
Outer jacket ball bearing steel.
Cage plastic.
Balls steel.

Sample order:
nlm 21500-1202

Note:
The linear ball bearings correspond to series 3 of ISO 10285. With double-sided seal. The linear ball bearings have a plastic cage which results in quiet and outstanding running properties. We recommend using linear ball bearing with steel cages for application temperatures over +80 °C. The bearings are secured by DIN 471/472 circlips.

Recommended tolerances:
Shaft: h6
Housing: H7

Linear ball bearings with double-sided seal should be greased before installation.

The specified load ratings apply with the use of hardened and ground shafts.

Temperature range:
-20 °C to +80 °C.

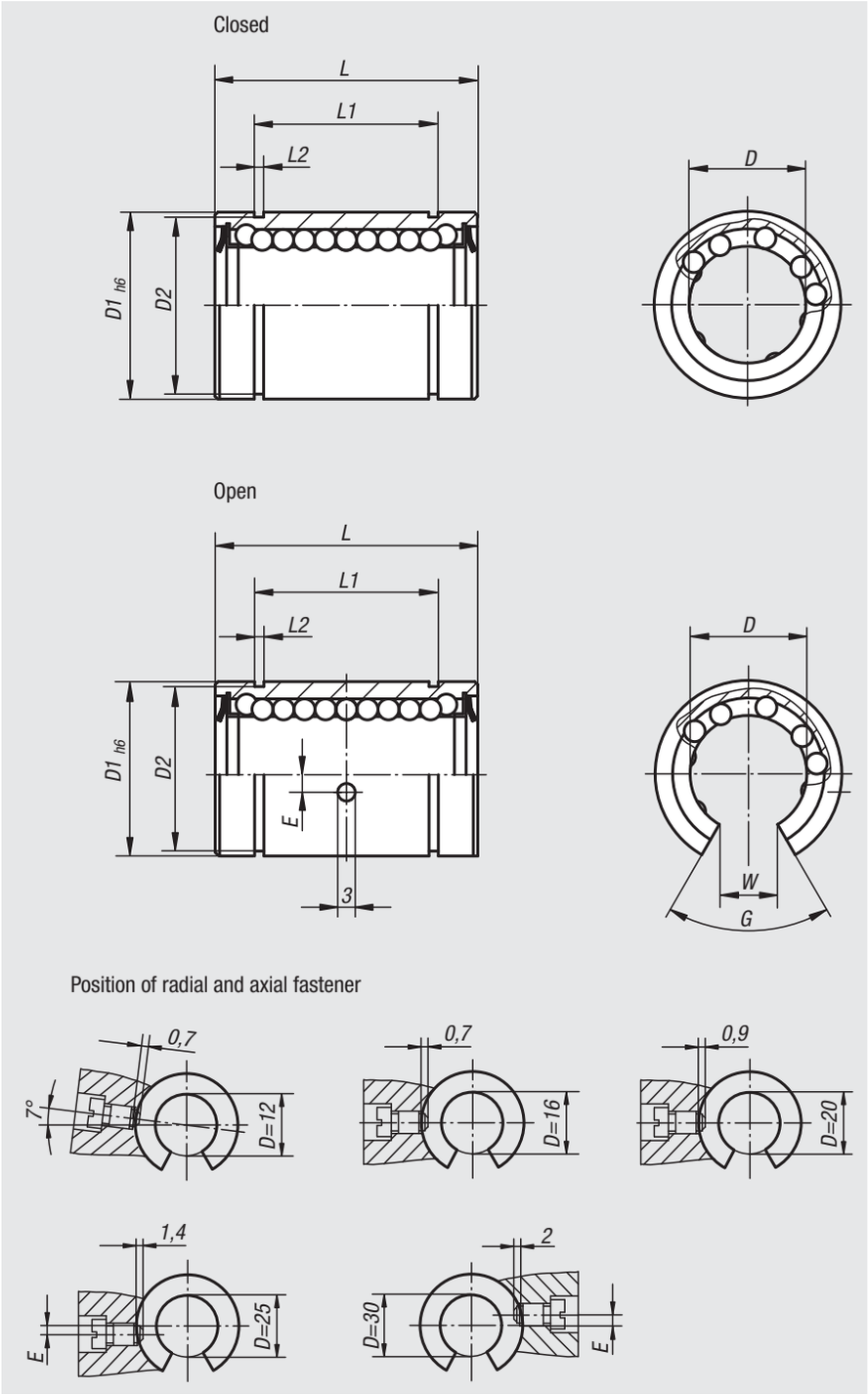

Order No. closed	Order No. open	D	D1	D2	E	G	L	L1	L2	W	Dynamic load rating N	Static load rating N
21500-1202	**-**	12	22	21	-	-	32 -0,2	22,9 -0,2	1,3	-	520	800
21500-1602	**21500-1612**	16	26	24,9	-/0	-/78°	36 -0,2	24,9 -0,2	1,3	-/10	590	910
21500-2002	**21500-2012**	20	32	30,3	-/0	-/60°	45 -0,2	31,5 -0,2	1,6	-/10	880	1400
21500-2502	**21500-2512**	25	40	37,5	-/1,5	-/60°	58 -0,3	44,1 -0,3	1,85	-/12,5	1000	1600
21500-3002	**21500-3012**	30	47	44,5	-/2	-/50°	68 -0,3	52,1 -0,3	1,85	-/12,5	1600	2800

Linear ball bearings

with steel cage

Material:
Outer jacket ball bearing steel.
Cage steel.
Balls steel.

Sample order:
nlm 21505-1202

Note:
The linear ball bearings correspond to series 3 of ISO 10285. With double-sided seals and a steel cage. The bearing is secured with DIN 471/472 circlips.

Recommended tolerances:
Shaft: h6
Housing: H7

Linear ball bearings with double-sided seals should be greased before installation.

The specified load ratings apply with the use of hardened and ground shafts.

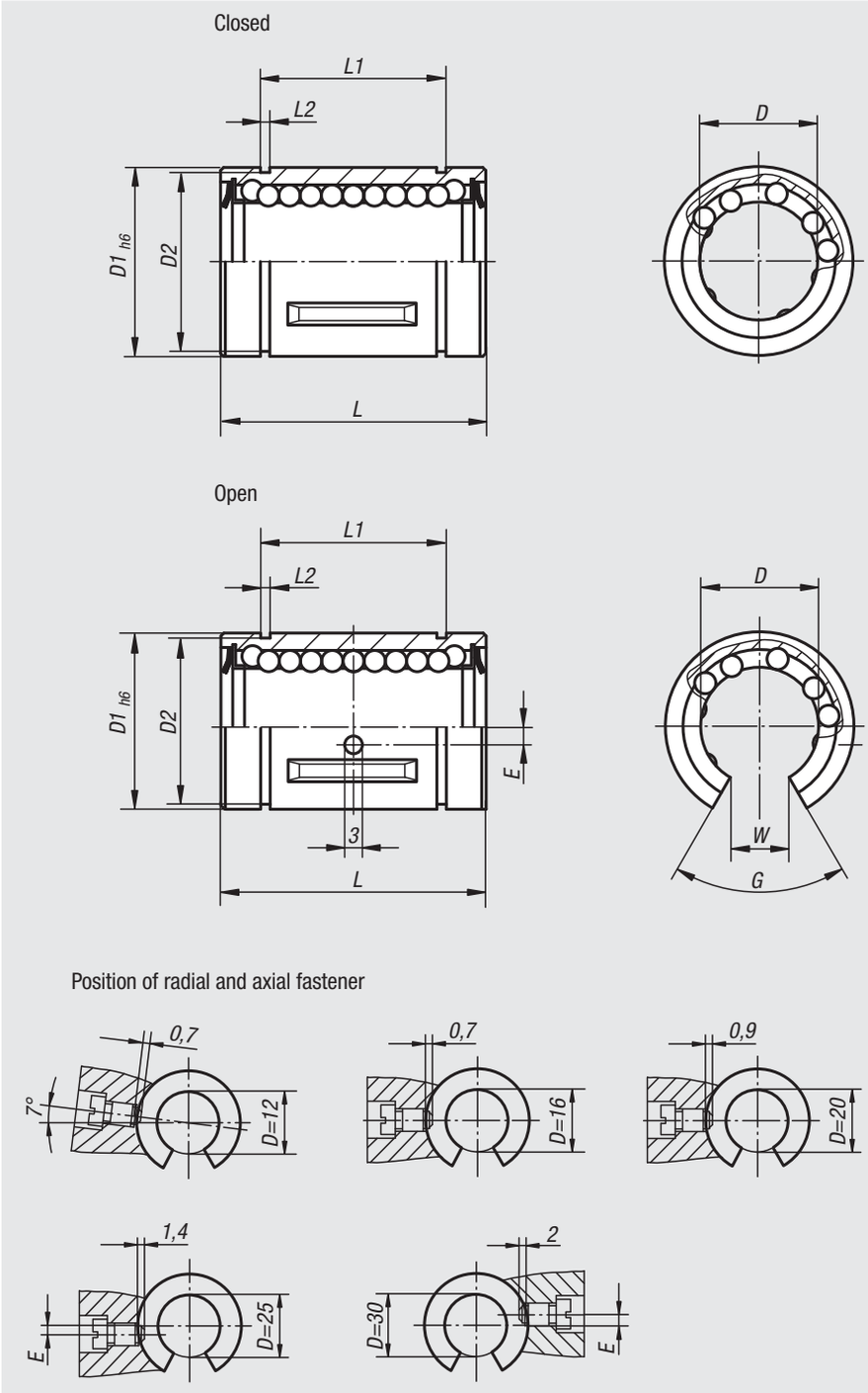

Order No. closed	Order No. open	D	D1	D2	E	G	L	L1	L2	W	Dynamic load rating N	Static load rating N
21505-1202	**21505-1212**	12	22	21	-/1,35	-/78°	32 -0,2	22,9 -0,2	1,3	-/7,5	420	714
21505-1602	**21505-1612**	16	26	24,9	-/0	-/78°	36 -0,2	24,9 -0,2	1,3	-/10	686	1092
21505-2002	**21505-2012**	20	32	30,3	-/0	-/60°	45 -0,2	31,5 -0,2	1,6	-/10	924	1610
21505-2502	**21505-2512**	25	40	37,5	-/1,5	-/60°	58 -0,3	44,1 -0,3	1,85	-/12,5	1470	2590
21505-3002	**21505-3012**	30	47	44,5	-/2	-/50°	68 -0,3	52,1 -0,3	1,85	-/12,5	2100	3920

Linear ball bearings stainless steel

Material:
Outer jacket stainless steel.
Cage stainless steel.
Balls stainless steel.

Sample order:
nlm 21505-01-1202

Note:
The linear ball bearings correspond to series 3 of ISO 10285. With double-sided seals and a stainless steel cage. The bearing is secured with DIN 471/472 circlips.

Recommended tolerances:
Shaft: h6
Housing: H7

Linear ball bearings with double-sided seals should be greased before installation.

The specified load ratings apply with the use of hardened and ground shafts.

Closed

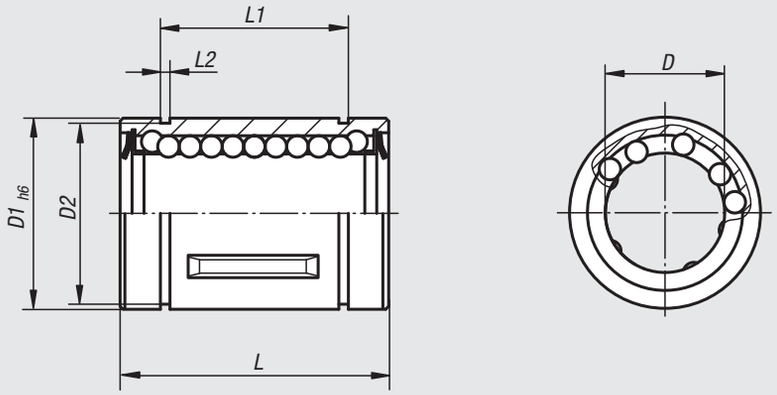

Open

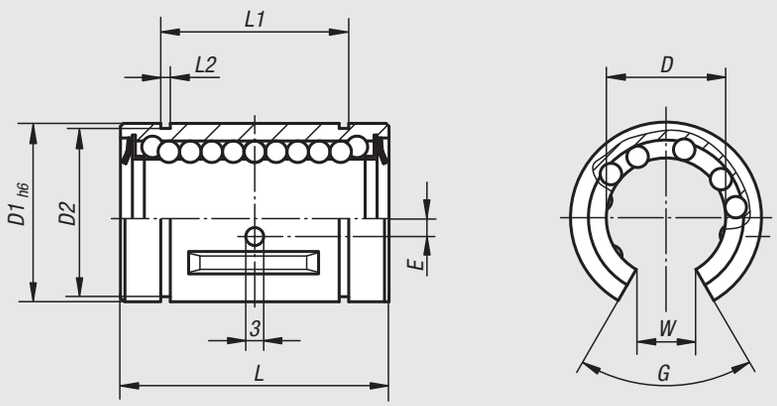

Position of radial and axial fastener

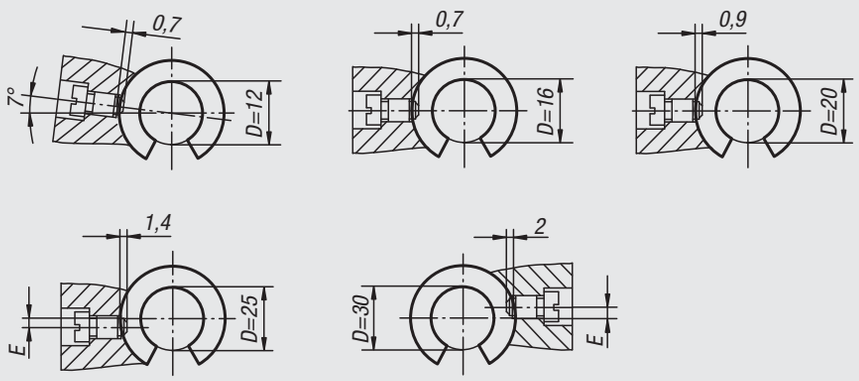

Order No. closed	Order No. open	D	D1	D2	G	E	L	L1	L2	W	Dynamic load rating N	Static load rating N
21505-01-1202	**21505-01-1212**	12	22	21	-/78°	-/1,35	32-0,2	22,9 -0,2	1,3	-/7,5	420	714
21505-01-1602	**21505-01-1612**	16	26	24,9	-/78°	-/0	36-0,2	24,9 -0,2	1,3	-/10	686	1092
21505-01-2002	**21505-01-2012**	20	32	30,3	-/60°	-/0	45-0,2	31,5 -0,2	1,6	-/10	924	1610
21505-01-2502	**21505-01-2512**	25	40	37,5	-/60°	-/1,5	58-0,3	44,1 -0,3	1,85	-/12,5	1470	2590
21505-01-3002	**21505-01-3012**	30	47	44,5	-/50°	-/2	68-0,3	52,1 -0,3	1,85	-/12,5	2100	3920

Linear ball bearings

self-aligning

Material:
Housing plastic
Raceways ball bearing steel.
Balls steel.

Sample order:
nlm 21510-1202

Note:
The linear ball bearings correspond to the self-aligning series 3 of ISO 10285. With double-sided seal. These bearings consist of high precision injection moulded plastic housings in which ball bearing steel raceway segments are clipped in. The plastic housing serves simultaneously for recycling and as seal retainer. The seal consists of a special polyamide material with a low coefficient of friction. The bearing is secured with DIN 471/472 circlips.

Recommended tolerances:
Shaft: h6
Housing: H7

Linear ball bearings with double-sided seal should be greased before installation.

The specified load ratings apply with the use of hardened and ground shafts.

Temperature range:
-20 °C to +80 °C.

Closed

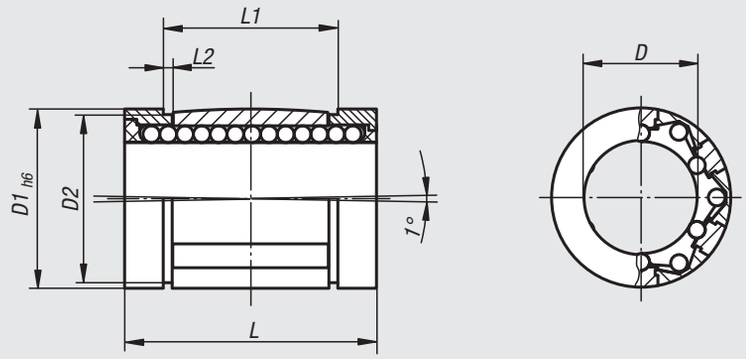

Open

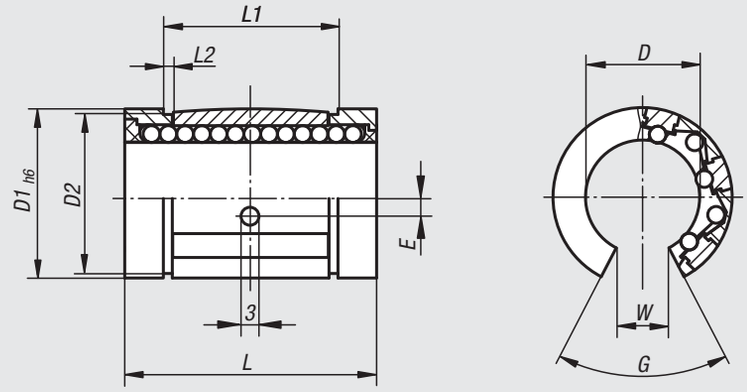

Position of radial and axial fixation

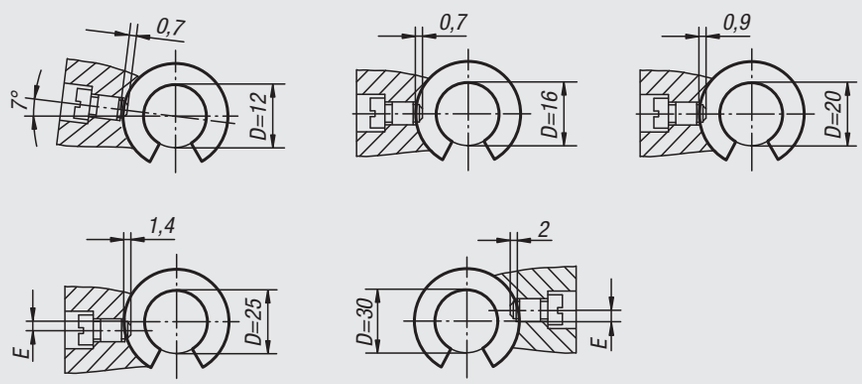

Order No. closed	Order No. open	D	D1	D2	E	G	L	L1	L2	W	Dynamic load rating N	Static load rating N
21510-1202	**21510-1212**	12	22	21	-/1,35	-/66°	32 -0,2	22,6 -0,2	1,3	-/7	830	910
21510-1602	**21510-1612**	16	26	24,9	-/0	-/68°	36 -0,2	24,6 -0,2	1,3	-/9,8	1020	1120
21510-2002	**21510-2012**	20	32	30,3	-/0	-/55°	45 -0,2	31,2 -0,2	1,6	-/10,5	2020	2220
21510-2502	**21510-2512**	25	40	37,5	-/1,5	-/57°	58 -0,3	43,7 -0,3	1,85	-/13	3950	4350
21510-3002	**21510-3012**	30	47	44,5	-/2	-/57°	68 -0,3	51,7 -0,3	1,85	-/15,3	4800	5280

Linear ball bearings

self-aligning, high load rating

Material:
Housing plastic
Raceways ball bearing steel.
Balls steel.

Sample order:
nlm 21515-1602

Note:
The linear ball bearings correspond to series 3 of ISO 10285. With double-lip seal both ends. In comparison to standard linear ball bearings, these bearing have twice the load rating or eight times longer working life. The self-aligning function means that housing bore misalignments or bent shafts can be compensated for, the load distribution optimised and uniform load on all balls over the entire bearing length assured. The bearing is secured with DIN 471/472 circlips.

Recommended tolerances:
Shaft: h6
Housing: H7

Linear ball bearings with double-sided seal should be greased before installation.

The specified load ratings apply with the use of hardened and ground shafts.

Temperature range:
-20 °C to +80 °C.

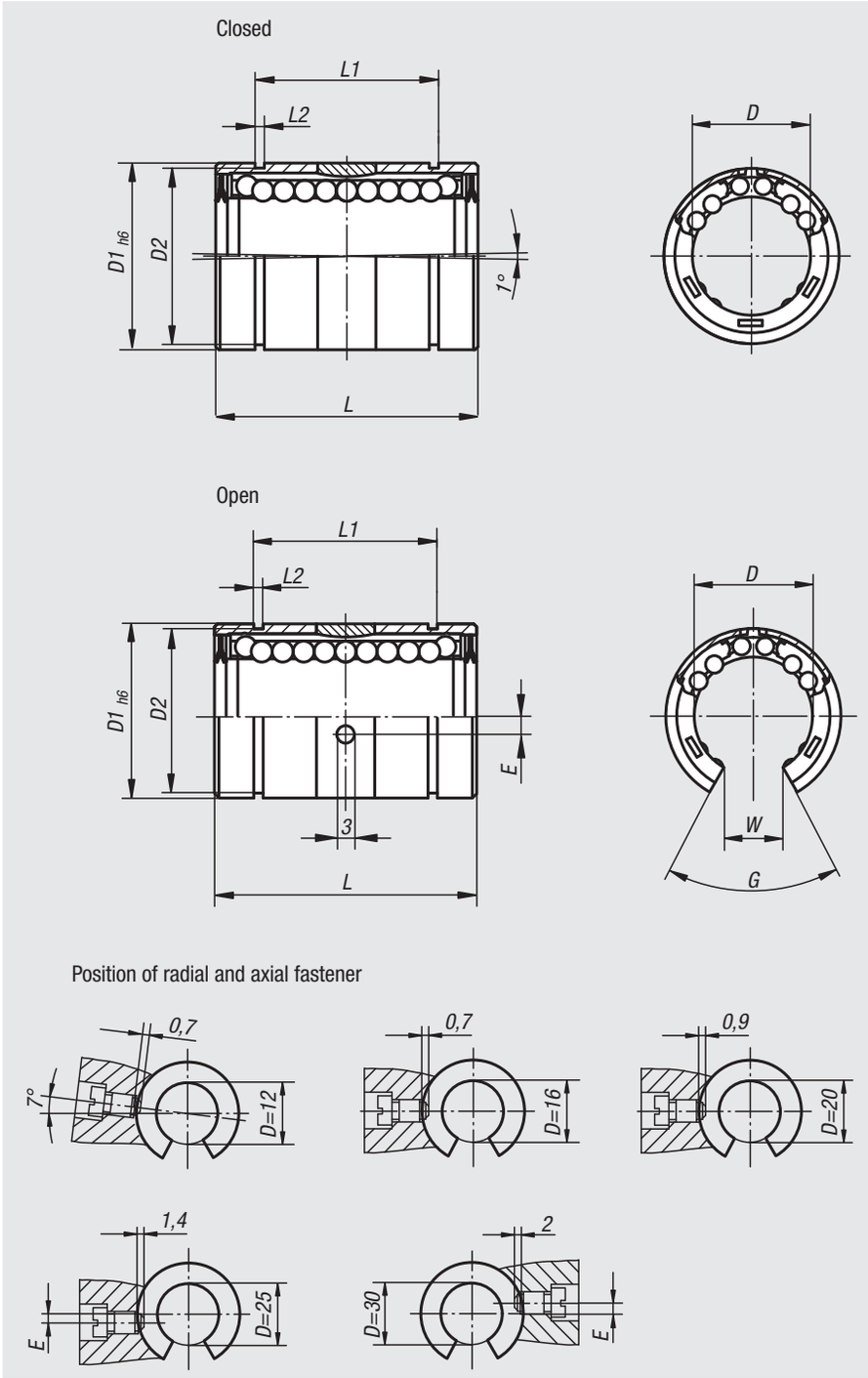

Order No. closed	Order No. open	D	D1	D2	E	G	L	L1	L2	W	Dynamic load rating N	Static load rating N
21515-1602	**21515-1612**	16	26	24,9	-/0	-/70°	36 -0,2	24,6 -0,2	1,3	-/9,4	2200	2400
21515-2002	**21515-2012**	20	32	30,3	-/0	-/60°	45 -0,2	31,2 -0,2	1,6	-/10,2	4000	4400
21515-2502	**21515-2512**	25	40	37,5	-/1,5	-/60°	58 -0,3	43,7 -0,3	1,85	-/14,4	6700	7300
21515-3002	**21515-3012**	30	47	44,5	-/2	-/55°	68 -0,3	51,7 -0,3	1,85	-/13,9	8300	9100

Linear ball bearings

with flange

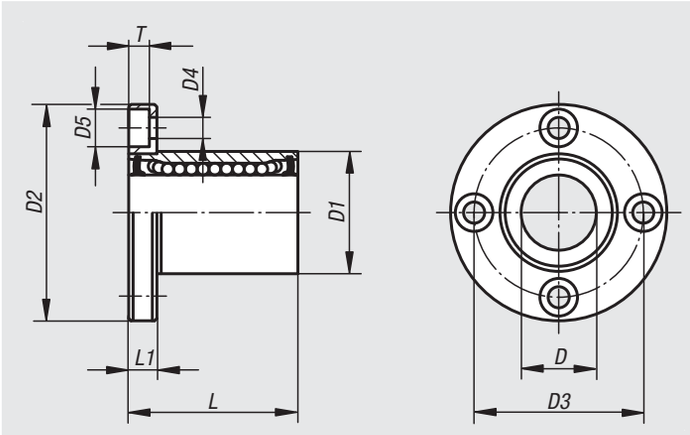

Material:
Housing steel.
Cage plastic.
Balls steel.

Sample order:
nlm 21518-1202

Note:
The linear ball bearings correspond to series 3 of ISO 10285. With double-sided seal. The linear ball bearings have a plastic cage which results in quiet and outstanding running properties. With flange for direct mounting on the housing.

Recommended tolerances:
Shaft: h6
Housing: H7

Linear ball bearings with double-sided seal should be greased before installation.

The specified load ratings apply with the use of hardened and ground shafts.

Temperature range:
-20 °C to +80 °C.

Accessories:
Precision guide shafts 21595.
Fastening screws 07160.

Order No.	D	D1	D2	D3	D4	D5	L	L1	T	Dynamic load rating N	Static load rating N
21518-1202	12	22	42	32	4,5	7,5	32	6	4,1	520	790
21518-1602	16	26	46	36	4,5	7,5	36	6	4,1	590	910
21518-2002	20	32	54	43	5,5	9	45	8	5,1	880	1400
21518-2502	25	40	62	51	5,5	9	58	8	5,1	1000	1600
21518-3002	30	47	76	62	6,6	11	68	10	6,1	1600	2800

Linear ball bearings

with flange, double bearing

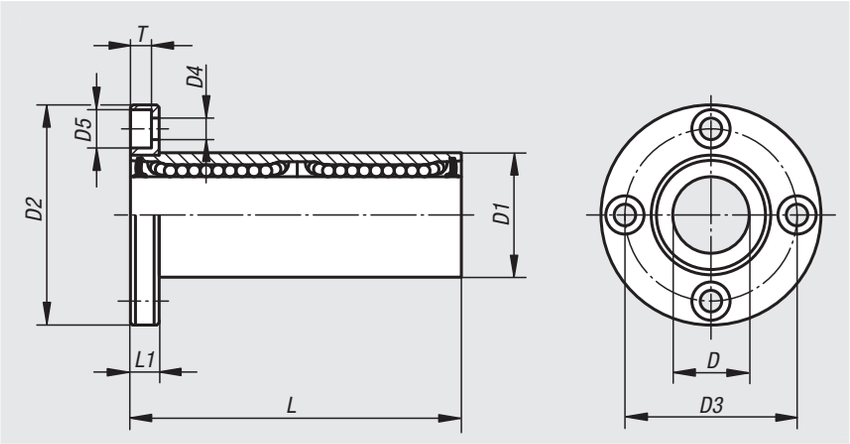

Material:
Housing steel.
Cage plastic.
Balls steel.

Sample order:
nlm 21520-1202

Note:
The linear ball bearings correspond to series 3 of ISO 10285. With double-sided seal. The linear ball bearings have a plastic cage which results in quiet and outstanding running properties. With flange for direct mounting on the housing. Double bearing version for use under torque loads.

Recommended tolerances:
Shaft: h6
Housing: H7

Linear ball bearings with double-sided seal should be greased before installation.

The specified load ratings apply with the use of hardened and ground shafts.

Temperature range:
-20 °C to +80 °C.

Accessories:
Precision guide shafts 21595.
Fastening screws 07160.

Order No.	D	D1	D2	D3	D4	D5	L	L1	T	Dynamic load rating N	Static load rating N
21520-1202	12	22	42	32	4,5	7,5	61	6	4,1	657	1200
21520-1602	16	26	46	36	4,5	7,5	68	6	4,1	1230	2350
21520-2002	20	32	54	43	5,5	9	80	8	5,1	1400	2750
21520-2502	25	40	62	51	5,5	9	112	8	5,1	1560	3140
21520-3002	30	47	76	62	6,6	11	123	10	6,1	2490	5490

Linear housing units

with flange

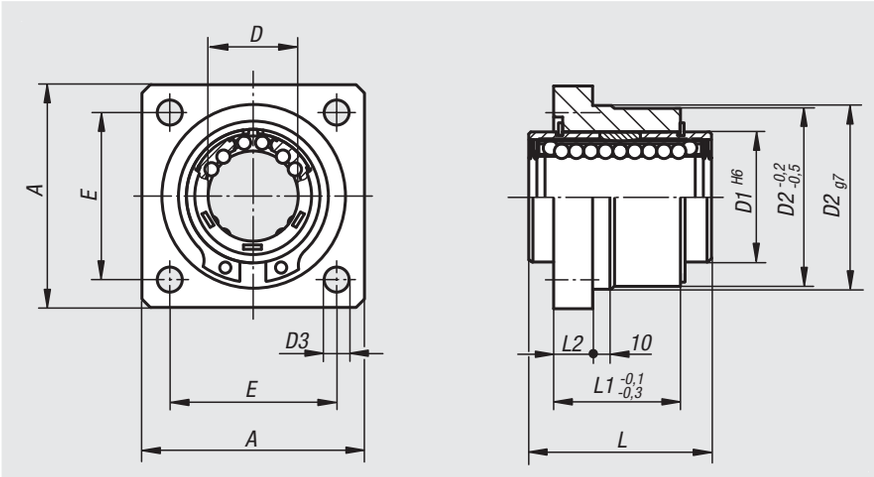

Material:
Housing aluminium

Version:
Housing bright.

Sample order:
nlm 21522-121002

Note:
Ready to install linear housing units consisting of an extruded aluminium housing with a self-aligning linear ball bearing 21510 and seals both sides. The bearings are secured in the housing with DIN 472 circlips.

Recommended shaft tolerance: h6.

Load ratings according to the linear ball bearings specifications.

On request:
Linear housing units can be equipped with any of our linear ball bearings.

Accessories:
Precision guide shafts 21595.
Fastening screws 07160 or 07161.

Order No.	A	D	D1	D2	D3	E	L	L1	L2
21522-121002	40	12	22	32	5,5	30	32	22	6
21522-161002	50	16	26	38	5,5	35	36	24	8
21522-201002	60	20	32	46	6,6	42	45	30	10
21522-251002	70	25	40	58	6,6	54	58	42	12
21522-301002	80	30	47	66	9	60	68	50	14

Linear housing units

with flange, tandem

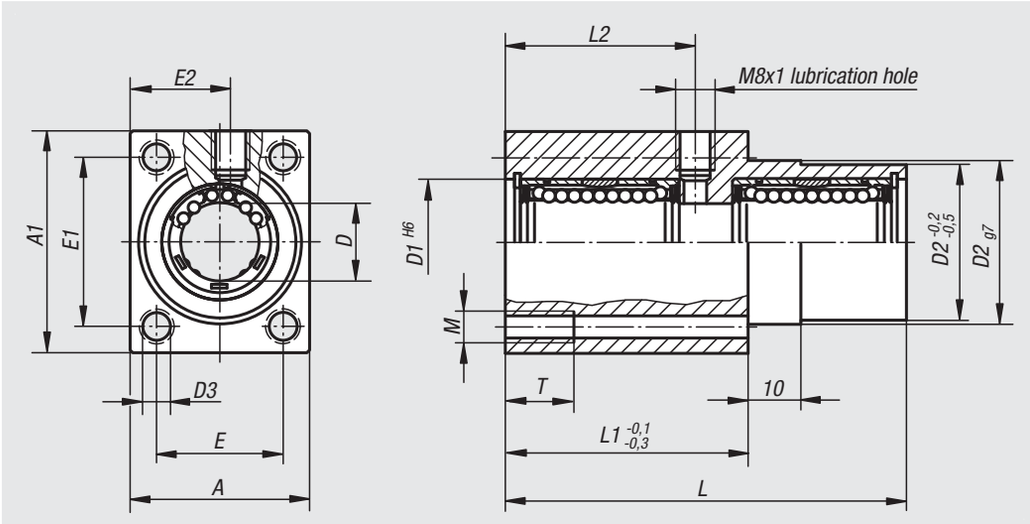

Material:
Housing aluminium

Version:
Housing bright.

Sample order:
nlm 21524-121002

Note:
Ready to install linear housing units consisting of an extruded aluminium housing with two self-aligning linear ball bearings 21510 and seals both sides. The bearings are secured in the housing with DIN 472 circlips.

Recommended shaft tolerance: h6.

Load ratings according to the linear ball bearing specifications (x2).

On request:
Linear housing units can be equipped with any of our linear ball bearings.

Accessories:
End seals 21560.
Precision guide shafts 21595.
Fastening screws 07160 or 07161.

Order No.	A	A1	D	D1	D2	D3	E	E1	E2	L	L1	L2	M	T
21524-121002	34	42	12	22	30	5,3	24	32	19	76	46	36	M6	13
21524-161002	40	50	16	26	35	6,6	28	38	22	84	50	40	M8	18
21524-201002	50	60	20	32	42	8,4	35	45	27	104	60	50	M10	22
21524-251002	60	74	25	40	52	10,5	42	56	32	130	73	63	M12	26
21524-301002	70	84	30	47	61	13,5	50	64	37	152	82	74	M16	34

Linear housing units

single, closed

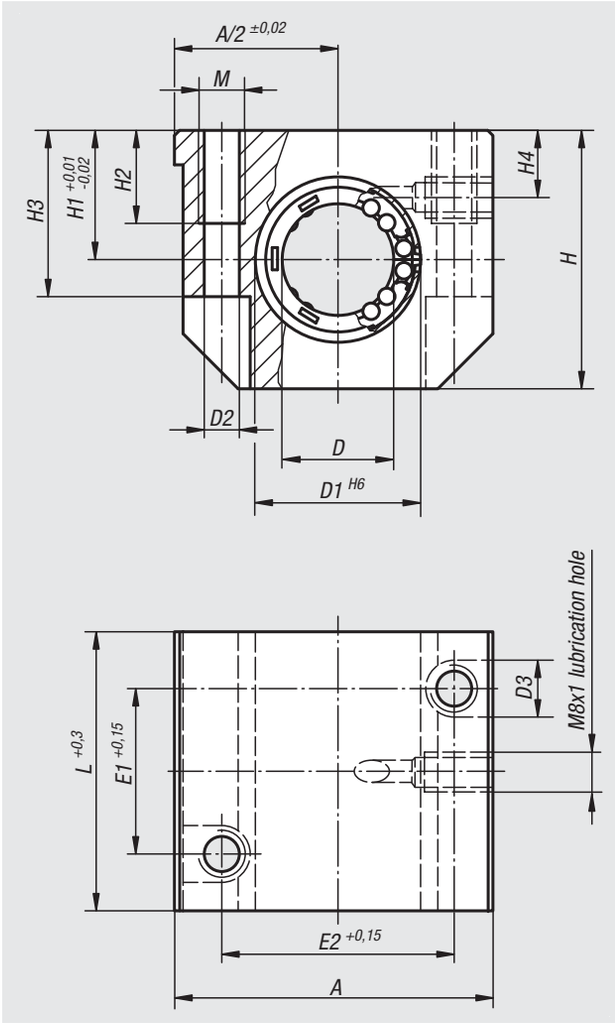

Material:
Housing aluminium

Version:
Housing bright.

Sample order:
nlm 21530-121002

Note:
Ready to install linear housing units consisting of an extruded aluminium housing with a self-aligning linear ball bearing 21510 and seals both sides. The bearings are secured in the housing with DIN 472 circlips.

Recommended shaft tolerance: h6.

Load ratings according to the linear ball bearing specifications.

On request:
Linear housing units can be equipped with any of our linear ball bearings.

Accessories:
End seals 21560.
Precision guide shafts 21595.
Fastening screws 07160 or 07161.

Order No.	A	D	D1	D2	D3	E1	E2	H	H1	H2	H3	H4	L	M
21530-121002	43	12	22	4,2	8	23	32	35	18	13	25	10	39	M5
21530-161002	53	16	26	5,2	10	26	40	42	22	13	30	12	43	M6
21530-201002	60	20	32	6,8	11	32	45	50	25	18	34	13	54	M8
21530-251002	78	25	40	8,6	15	40	60	60	30	22	40	15	67	M10
21530-301002	87	30	47	8,6	15	45	68	70	35	22	48	16	79	M10

Linear housing units

single, open

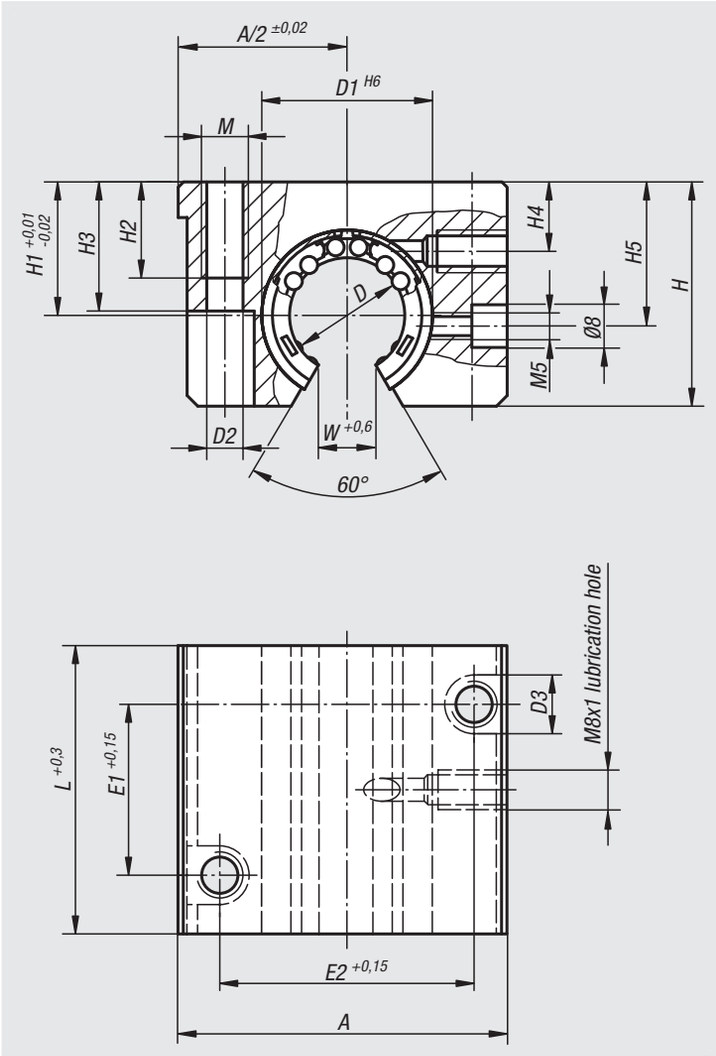

Material:
Housing aluminium

Version:
Housing bright.

Sample order:
nlm 21535-121012

Note:
Ready to install linear housing units consisting of an extruded aluminium housing with a self-aligning linear ball bearing 21510 and seals both sides. The bearings are secured in the housing with DIN 472 circlips.

Recommended shaft tolerance: h6.

Load ratings according to the linear ball bearing specifications.

On request:
Linear housing units can be equipped with any of our linear ball bearings.

Accessories:
End seals 21560.
Precision guide shafts 21590 or 21595.
Fastening screws 07160 or 07161.

Order No.	A	D	D1	D2	D3	E1	E2	H	H1	H2	H3	H4	H5	L	M	W
21535-121012	43	12	22	4,2	8	23	32	28	18	11	23,5	8	16,65	39	M5	7
21535-161012	53	16	26	5,2	10	26	40	35	22	13	30	12	22	43	M6	9,4
21535-201012	60	20	32	6,8	11	32	45	42	25	18	34	13	25	54	M8	10,2
21535-251012	78	25	40	8,6	15	40	60	51	30	22	40	15	31,5	67	M10	12,5
21535-301012	87	30	47	8,6	15	45	68	60	35	22	48	16	33	79	M10	13,9

Linear housing units

tandem, closed

Material:
Housing aluminium

Version:
Housing bright.

Sample order:
nlm 21540-121002

Note:
Ready to install linear housing units consisting of an extruded aluminium housing with two self-aligning linear ball bearings 21510 and seals both sides. The bearings are secured in the housing with DIN 472 circlips.

Recommended shaft tolerance: h6.

Load ratings according to the linear ball bearing specifications (x2).

On request:
Linear housing units can be equipped with any of our linear ball bearings.

Accessories:
End seals 21560.
Precision guide shafts 21595.
Fastening screws 07160 or 07161.

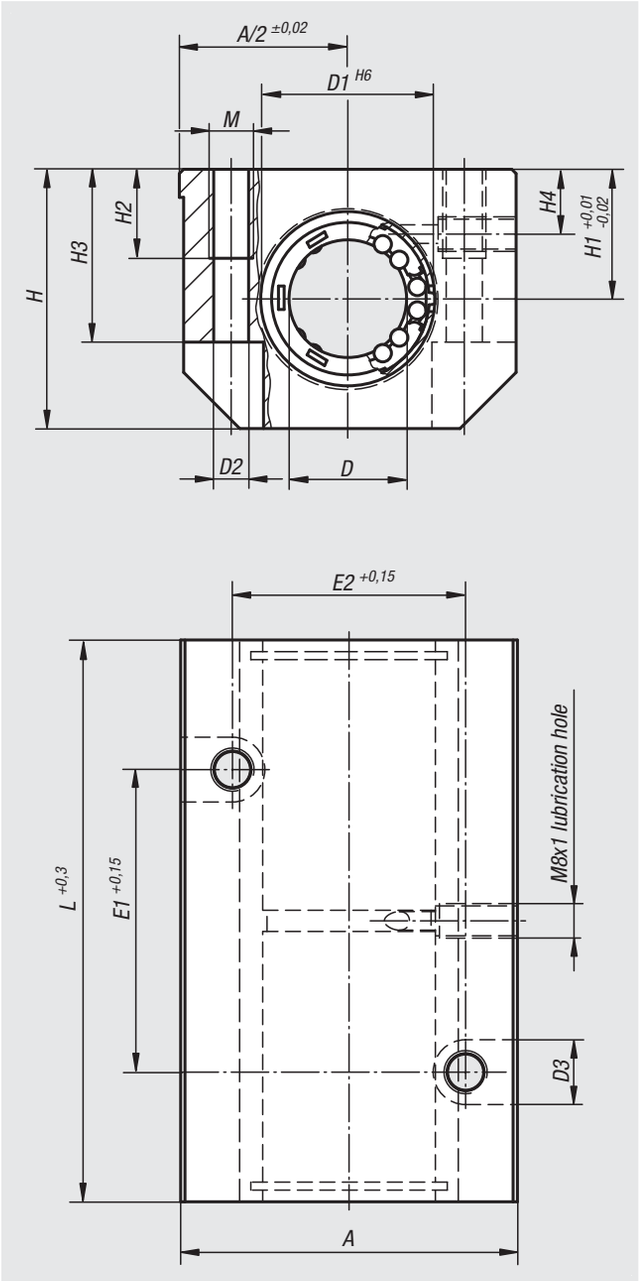

Order No.	A	D	D1	D2	D3	E1	E2	H	H1	H2	H3	H4	L	M
21540-121002	43	12	22	5,2	10	40	30	35	18	13	25	10	76	M6
21540-161002	53	16	26	5,2	10	45	36	42	22	13	30	12	84	M6
21540-201002	60	20	32	6,8	11	55	45	50	25	18	34	13	104	M8
21540-251002	78	25	40	8,6	15	70	54	60	30	22	40	15	130	M10
21540-301002	87	30	47	10,3	18	85	62	70	35	26	48	16	152	M12

Linear housing units

tandem, open

Material:
Housing aluminium

Version:
Housing bright.

Sample order:
nlm 21545-121012

Note:
Ready to install linear housing units consisting of an extruded aluminium housing with two self-aligning linear ball bearings 21510 and seals both sides. The bearings are secured in the housing with cap screws.

Recommended shaft tolerance: h6.

Load ratings according to the linear ball bearing specifications (x2).

On request:
Linear housing units can be equipped with any of our linear ball bearings.

Accessories:
End seals 21560.
Precision guide shafts 21590 or 21595.
Fastening screws 07160 or 07161.

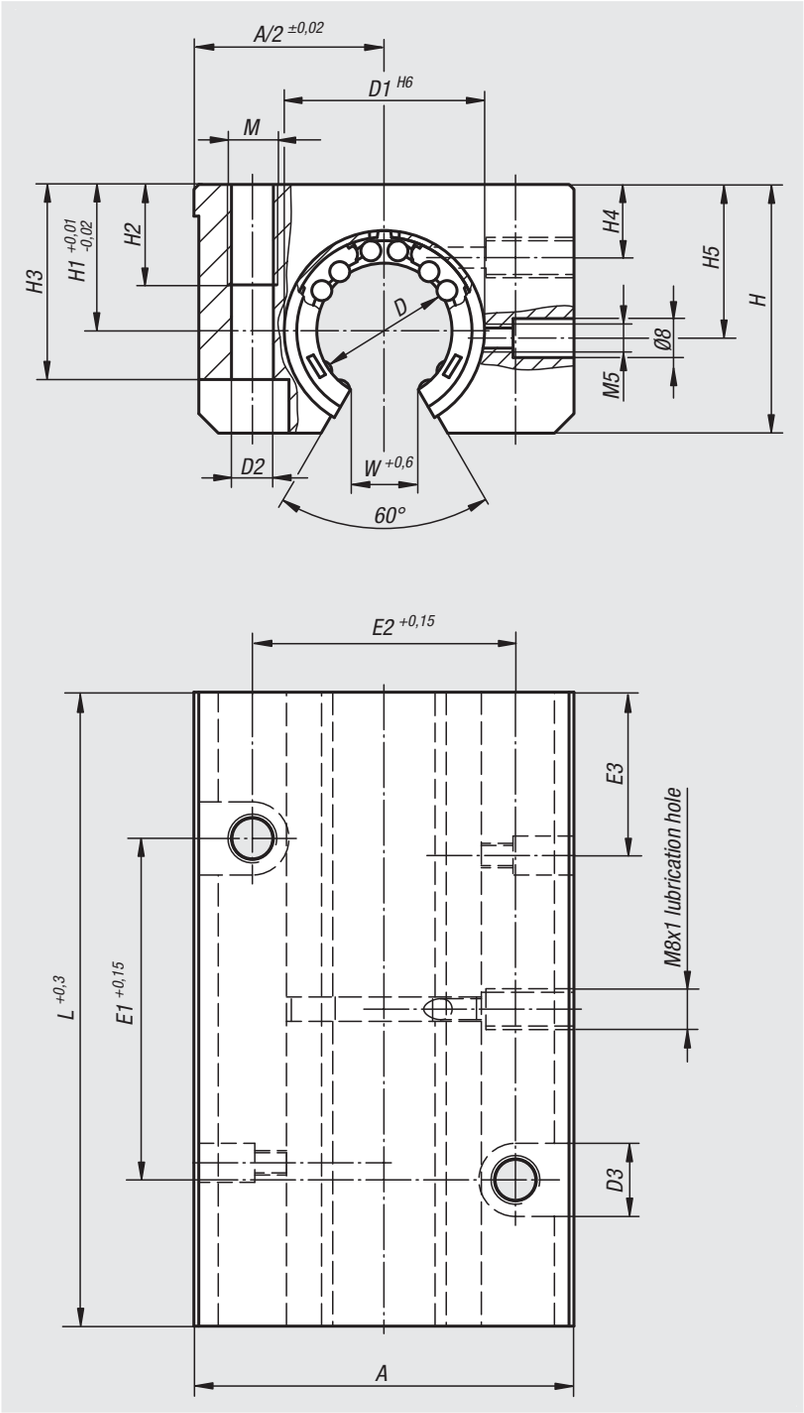

Order No.	A	D	D1	D2	D3	E1	E2	E3	H	H1	H2	H3	H4	H5	L	M	W
21545-121012	43	12	22	5,2	10	40	30	19,5	30	18	13	25	8	16,65	76	M6	7
21545-161012	53	16	26	5,2	10	45	36	21,5	35	22	13	30	12	22	84	M6	9,4
21545-201012	60	20	32	6,8	11	55	45	27	42	25	18	34	13	25	104	M8	10,2
21545-251012	78	25	40	8,6	15	70	54	33,5	51	30	22	40	15	31,5	130	M10	12,9
21545-301012	87	30	47	10,3	18	85	62	39,5	60	35	26	48	16	33	152	M12	14,4

Linear housing units

quadro, closed

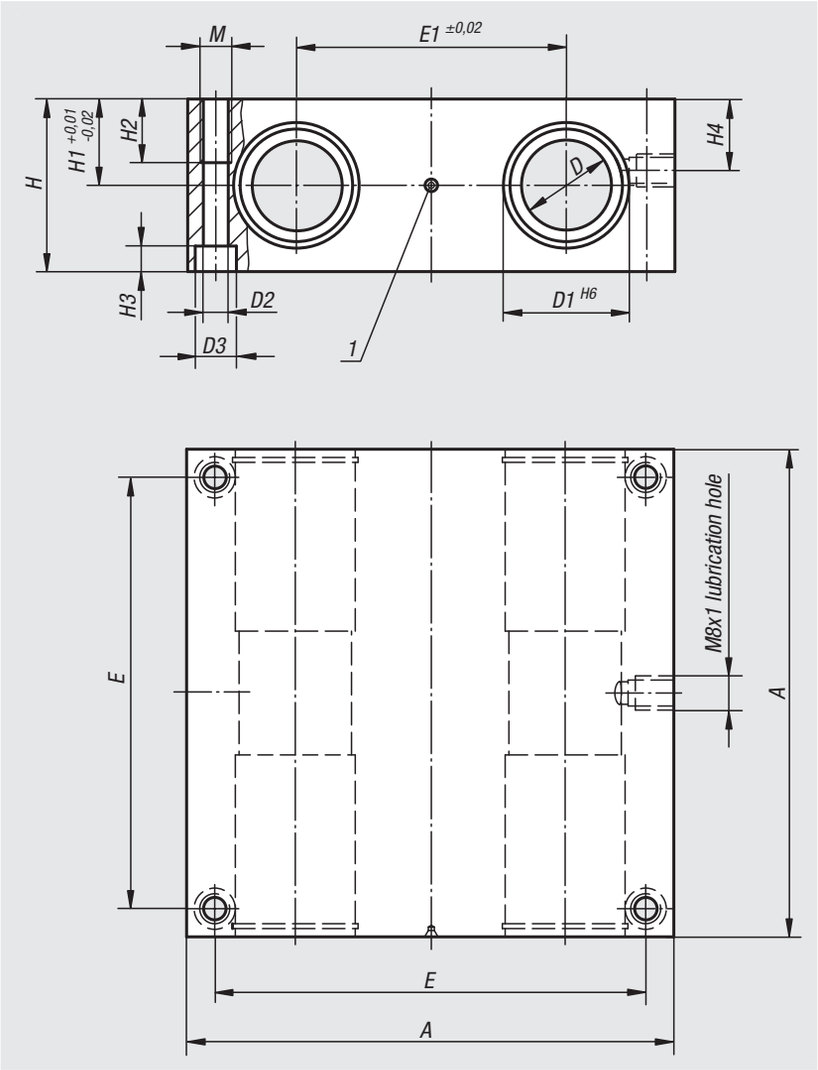

Material:
Housing aluminium

Version:
Housing bright.

Sample order:
nlm 21550-121002

Note:
Ready to install linear housing units consisting of an extruded aluminium housing with four self-aligning linear ball bearings 21510 and seals both sides. The bearings are secured in the housing with DIN 472 circlips.

Recommended shaft tolerance: h6.

Load ratings according to the linear ball bearing specifications (x4).

On request:
Linear housing units can be equipped with any of our linear ball bearings.

Accessories:
End seals 21560.
Precision guide shafts 21595.
Fastening screws 07160 or 07161.

Drawing reference:
1) centring hole

Order No.	A	D	D1	D2	D3	E	E1	H	H1	H2	H3	H4	M
21550-121002	85	12	22	5,3	10	73	42	32	16	13	5,4	13	M6
21550-161002	100	16	26	5,3	10	88	54	36	18	13	5,4	15	M6
21550-201002	130	20	32	6,8	11	115	72	46	23	18	6,4	19	M8
21550-251002	160	25	40	9	15	140	88	56	28	22	8,6	24	M10
21550-301002	180	30	47	10,5	18	158	96	64	32	26	10,6	27	M12

Linear housing units

quadro, open

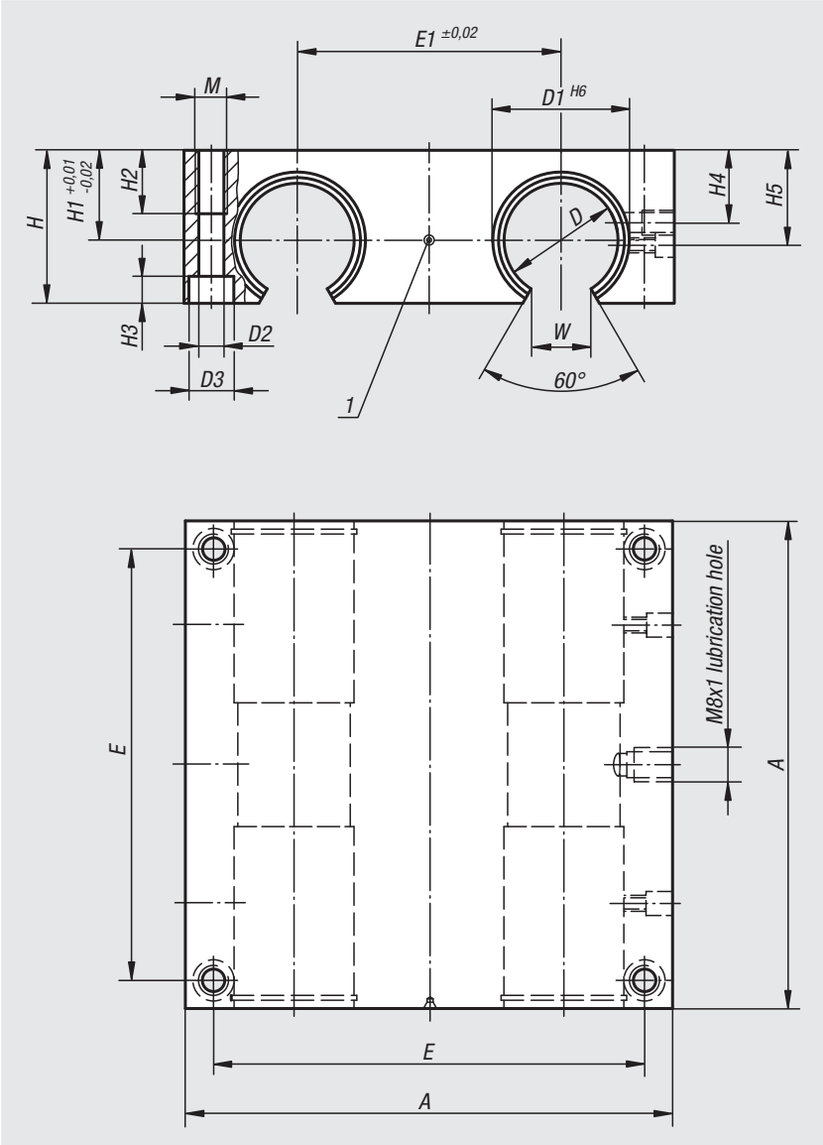

Material:
Housing aluminium

Version:
Housing bright.

Sample order:
nlm 21555-121012

Note:
Ready to install linear housing units consisting of an extruded aluminium housing with four self-aligning linear ball bearings 21510 and seals both sides. The bearings are secured in the housing with cap screws.

Recommended shaft tolerance: h6.

Load ratings according to the linear ball bearing specifications (x4).

On request:
Linear housing units can be equipped with any of our linear ball bearings.

Accessories:
End seals 21560.
Precision guide shafts 21590 or 21595.
Fastening screws 07160 or 07161.

Drawing reference:
1) centring hole

Order No.	A	D	D1	D2	D3	E	E1	H	H1	H2	H3	H4	H5	M	W
21555-121012	85	12	22	5,3	10	73	42	30	18	13	5,4	10	16,65	M6	7
21555-161012	100	16	26	5,3	10	88	54	35	22	13	5,4	12	22	M6	9,4
21555-201012	130	20	32	6,8	11	115	72	42	25	18	6,4	13	25	M8	10,2
21555-251012	160	25	40	9	15	140	88	51	30	22	8,6	15	31,5	M10	12,9
21555-301012	180	30	47	10,5	18	158	96	60	35	26	10,6	16	33	M12	13,9

End seals

double-lip sealing rings

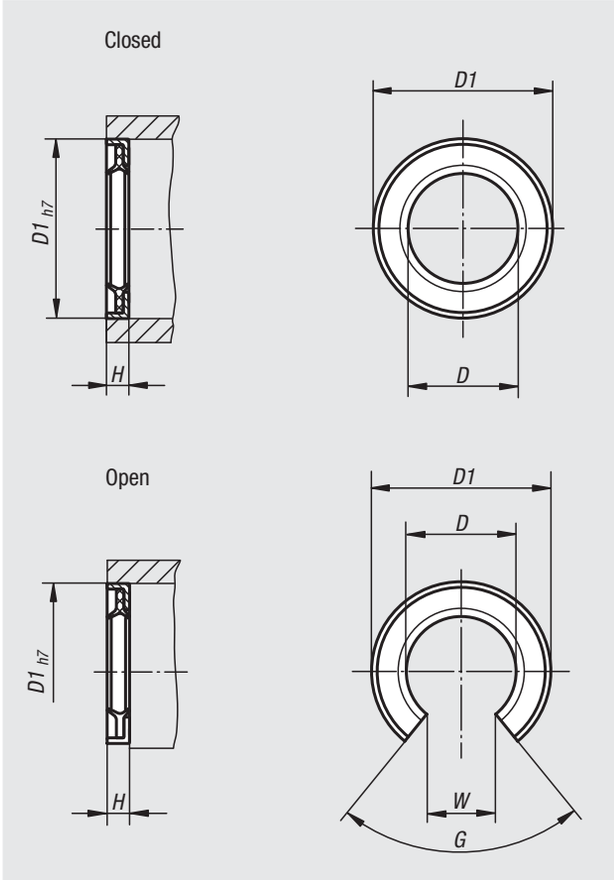

Material:
Ring steel.
Rubber NBR.

Sample order:
nlm 21560-120

Note:
In addition to the standard seals for linear ball bearings, these end seals are also available. The end seals give much better protection from dirt and dust. The seals are inserted into the housing bores (tolerance H7) in front of the bearings and secured with glue.

Order No. closed	Order No. open	D	D1	H	G	W
21560-120	**21560-121**	12	22	3	-/78°	-/7,5
21560-160	**21560-161**	16	26	3	-/78°	-/10
21560-200	**21560-201**	20	32	4	-/60°	-/10
21560-250	**21560-251**	25	40	4	-/60°	-/12,5
21560-300	**21560-301**	30	47	5	-/50°	-/12,5

Shaft supports

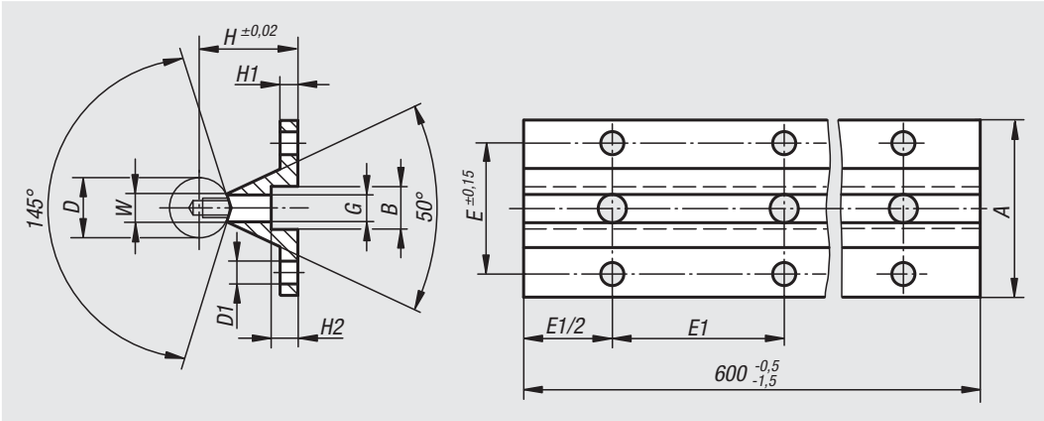

Material:
Aluminium.

Version:
Bright.

Sample order:
nlm 21565-12375X0600

Note:
Shaft supports are required to support shafts in conjunction with open linear ball bearings.
Shafts supported along the entire length result in particularly rigid assemblies, in many cases however, sectional supports suffice.
The standard length of our shaft supports is 600 mm. These can be shortened short or set in series to produce longer supports.

Accessories:
Precision guide shafts with fastening holes 21590.
Fastening screws 07160.

Order No.	Size	A	B	D	D1	E	E1	G hole for DIN 912 cap screw	H	H1	H2	W
21565-12375X0600	12	40	8	12	4,5	29	75	M4x16	22	5	5	5,8
21565-16500X0600	16	45	9,5	16	5,5	33	100	M5x20	26	5	6	7
21565-20500X0600	20	52	11	20	6,6	37	100	M6x25	32	6	6,5	8,3
21565-25600X0600	25	57	14	25	6,6	42	120	M8x25	36	6	8,5	10,8
21565-30750X0600	30	69	17	30	9	51	150	M10x30	42	7	10,5	11

Traverses fixed

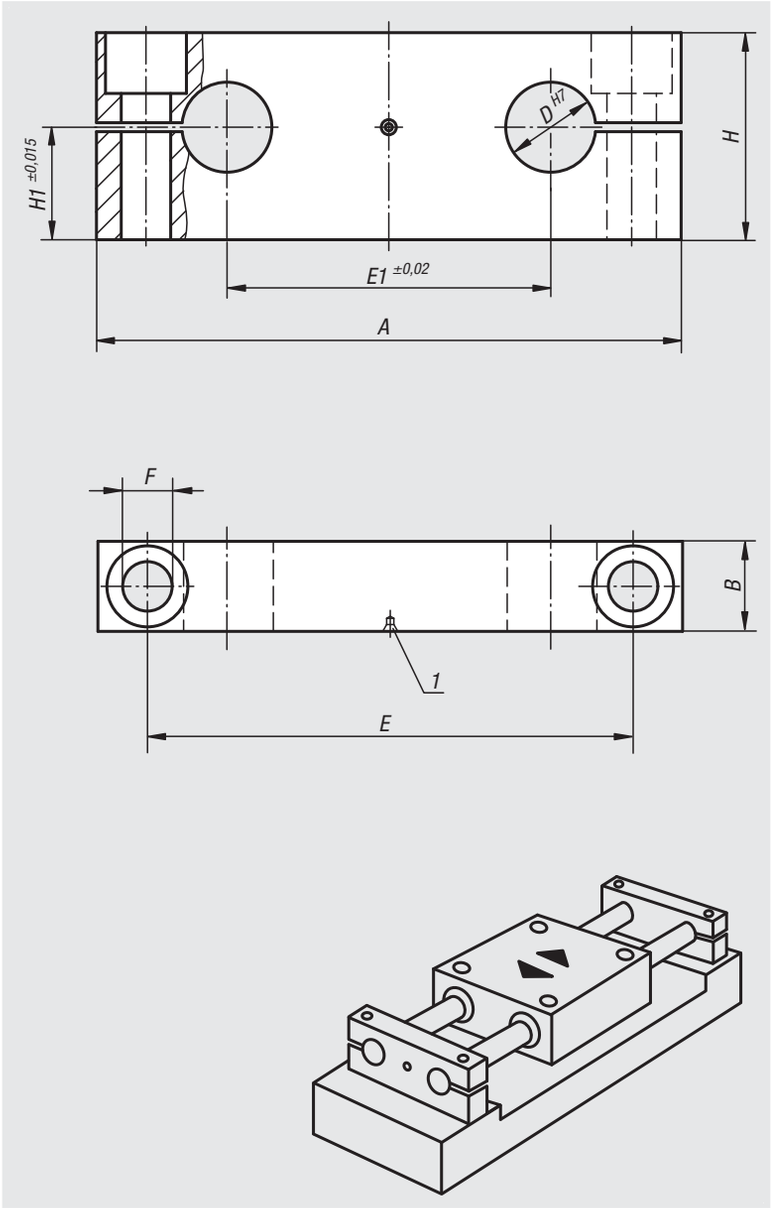

Material:
Aluminium.

Version:
Bright.

Sample order:
nlm 21575-12

Note:
Traverse with two bores for easy and secure clamping and fastening of guide shafts. For the assembly of prefabricated table units with our Quadro linear housing units 21550 or 21555.

This version permits the axial motion of the linear bearing unit i.e. the shafts are mounted fixed with the traverses on the machine bed.

Accessories:
Precision guide shafts 21595.
Fastening screws 07160 or 07161.

Drawing reference:
1) centring hole

Order No.	A	B	D	E	E1	F hole for ISO 4762 cap screw	H	H1
21575-12	85	14	12	70	42	6,6	32	18
21575-16	100	18	16	82	54	9	36	20
21575-20	130	20	20	108	72	11	46	25
21575-25	160	25	25	132	88	13,5	56	30
21575-30	180	25	30	150	96	13,5	64	35

Traverses moveable

Material:
Aluminium.

Version:
Bright.

Sample order:
nlm 21577-12

Note:
Traverse with two bores for easy and secure clamping and fastening of guide shafts. For the assembly of prefabricated table units with our Quadro linear housing units 21550 or 21555.

By fixed mounted linear bearing units these traverses permit the shaft to travel with the travers.

Accessories:
Precision guide shafts 21595.
Fastening screws 07160 or 07161.

Drawing reference:
1) centring hole

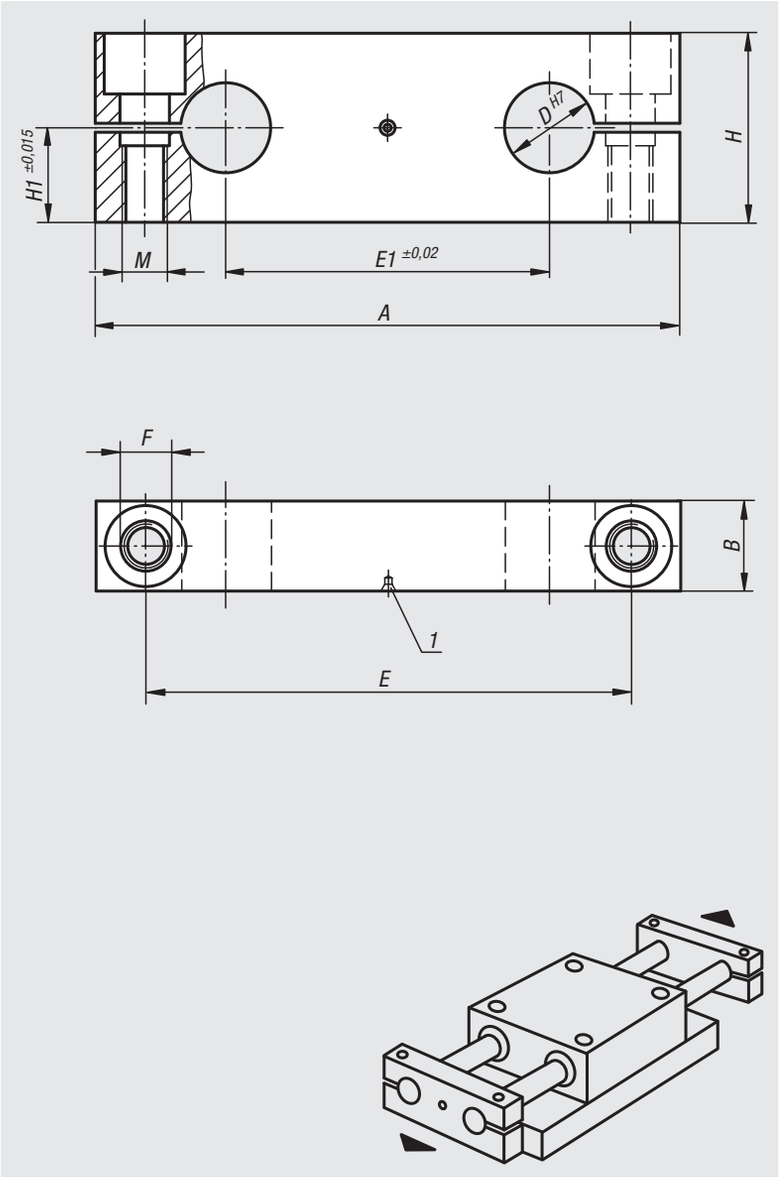

Order No.	A	B	D	E	E1	F hole for ISO 4762 cap screw	H	H1	M
21577-12	85	14	12	70	42	6,6	28	14	M6
21577-16	100	18	16	82	54	9	32	16	M8
21577-20	130	20	20	108	72	11	42	21	M10
21577-25	160	25	25	132	88	13,5	52	26	M12
21577-30	180	25	30	150	96	13,5	58	29	M12

Shaft supports

Material:
Aluminium.

Version:
Bright.

Sample order:
nlm 21580-12

Note:
Shaft support with bore for easy and secure clamping and fastening the guide shafts.

Accessories:
Precision guide shafts 21595.
Fastening screws 07160 or 07161.

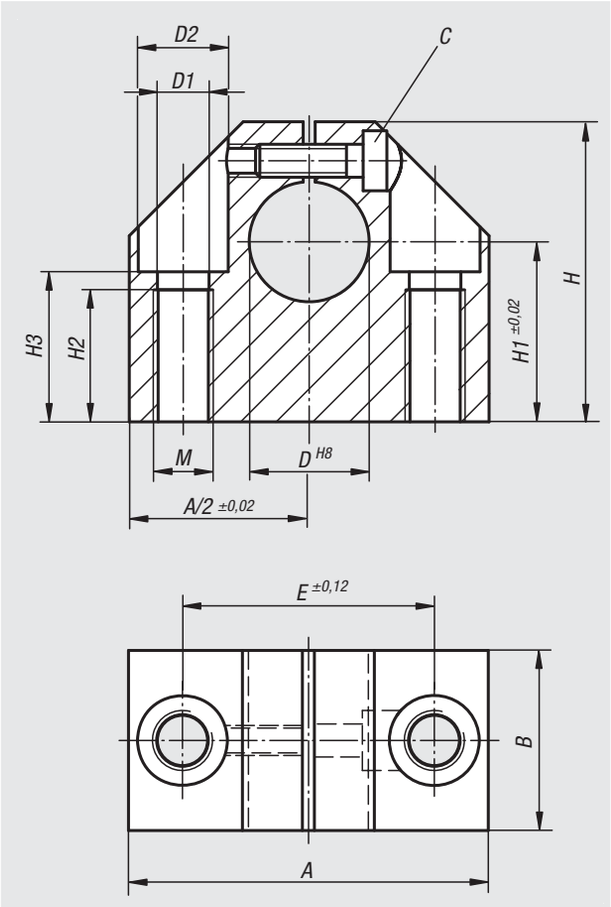

Order No.	A	B	D	D1	D2	E	H	H1	H2	H3	M	C (DIN 912)
21580-12	43	20	12	5,2	10	30	35	20	13	16,5	M6	M4
21580-16	53	24	16	6,8	11	38	42	25	18	21	M8	M5
21580-20	60	30	20	8,6	15	42	50	30	22	25	M10	M6
21580-25	78	38	25	10,3	18	56	60	35	26	30	M12	M8
21580-30	87	40	30	10,3	18	64	70	40	26	34	M12	M8

Shaft supports

standard

Material:
Aluminium.

Version:
Bright.

Sample order:
nlm 21582-12

Note:
Shaft support with bore for easy and secure clamping and fastening the guide shafts.

Accessories:
Precision guide shafts 21595.
Fastening screws 07160 or 07161.

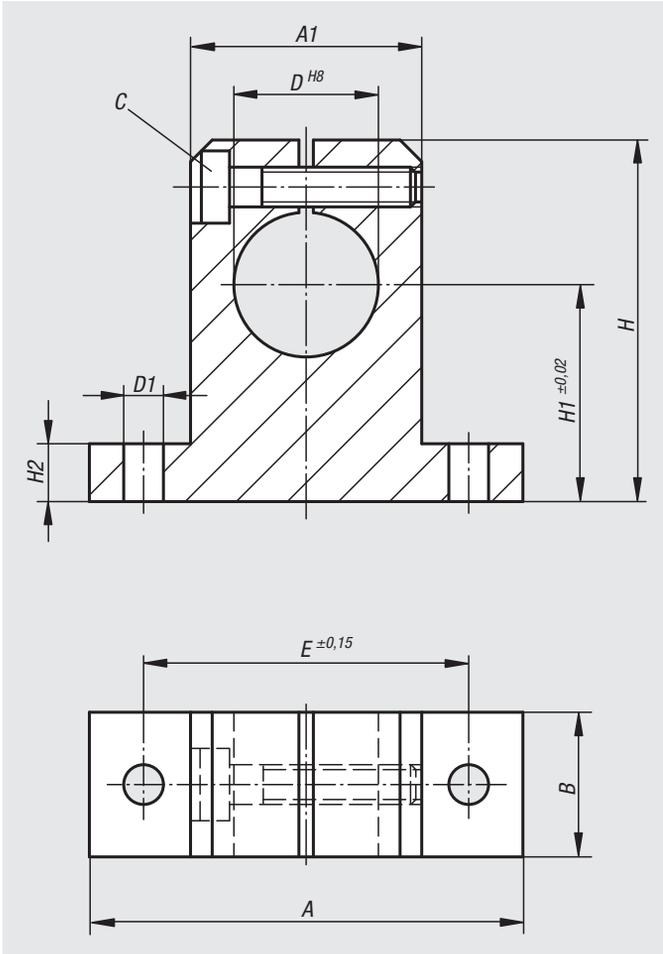

Order No.	A	A1	B	D	D1	E	H	H1	H2	C (DIN 912)
21582-12	42	20	12	12	5,5	32	35	20	5,5	M4
21582-16	50	26	16	16	5,5	40	42	25	6,5	M4
21582-20	60	32	20	20	5,5	45	50	30	8	M4
21582-25	74	38	25	25	6,6	60	58	35	9	M5
21582-30	84	45	28	30	9	68	68	40	10	M6

Shaft supports

flanged

Material:
Aluminium.

Version:
Bright.

Sample order:
nlm 21585-12

Note:
Flanged shaft support with standard bores for easy and secure clamping and fastening the guide shafts.

Accessories:
Precision guide shafts 21595.
Fastening screws 07160 or 07161.

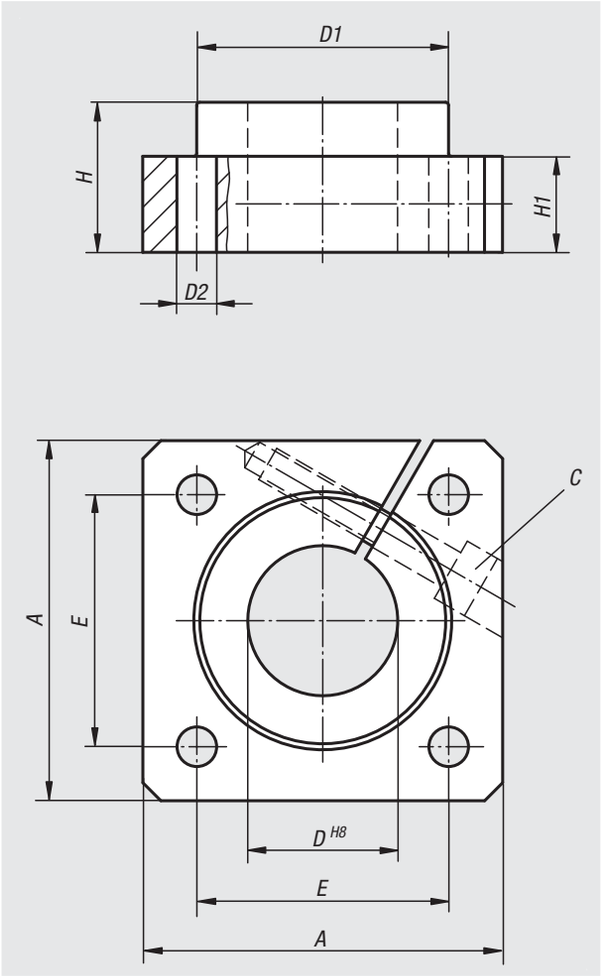

Order No.	A	D	D1	D2	E	H	H1	C (DIN 912)
21585-12	40	12	23,5	5,5	30 ±0,12	20	12	M4
21585-16	50	16	27,5	5,5	35 ±0,12	20	12	M4
21585-20	50	20	33,5	6,6	38 ±0,15	23	14	M5
21585-25	60	25	42	6,6	42 ±0,15	25	16	M6
21585-30	70	30	49,5	9	54 ±0,25	30	19	M8

Precision guide shafts

with fastening holes

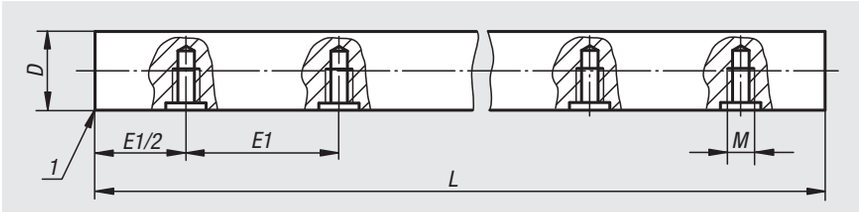

Material:
Steel 1.1213.
stainless steel 1.4034.

Version:
Steel, ground.
Steel, ground and hard-chromed, chrome coating 5 - 10 µm.
Stainless steel, ground.

The precision steel shafts are generally inductively surface hardened.

Sample order:
nlm 21590-012375X0600

Note:
The surface value obtained during the inductive hardening process guarantees high surface wear resistance.

Suitable for shaft supports 21565.

On request:
Lengths up to a max. 4000 mm.

Accessories:
Shaft supports 21565.

Drawing reference:
1) chamfered

Order No.	Material	Version	D	E1	L	M	Hardness penetration depth max.	Surface hardness HRC
21590-012375X0600	steel	-	12 h6	75	600	M4	1,3	62 ±2
21590-016500X0600	steel	-	16h6	100	600	M5	1,6	62 ±2
21590-020500X0600	steel	-	20h6	100	600	M6	1,6	62 ±2
21590-025600X0600	steel	-	25h6	120	600	M8	1,8	62 ±2
21590-030750X0600	steel	-	30h6	150	600	M10	2	62 ±2
21590-112375X0600	steel	hard chromed	12 h7	75	600	M4	1,3	65 - 70
21590-116500X0600	steel	hard chromed	16h7	100	600	M5	1,6	65 - 70
21590-120500X0600	steel	hard chromed	20h7	100	600	M6	1,6	65 - 70
21590-125600X0600	steel	hard chromed	25h7	120	600	M8	1,8	65 - 70
21590-130750X0600	steel	hard chromed	30h7	150	600	M10	2	65 - 70
21590-212375X0600	stainless steel	-	12 h6	75	600	M4	1,3	51 - 55
21590-216500X0600	stainless steel	-	16h6	100	600	M5	1,6	51 - 55
21590-220500X0600	stainless steel	-	20h6	100	600	M6	1,8	51 - 55
21590-225600X0600	stainless steel	-	25h6	120	600	M8	2	51 - 55
21590-230750X0600	stainless steel	-	30h6	150	600	M10	2,4	51 - 55

Precision guide shafts

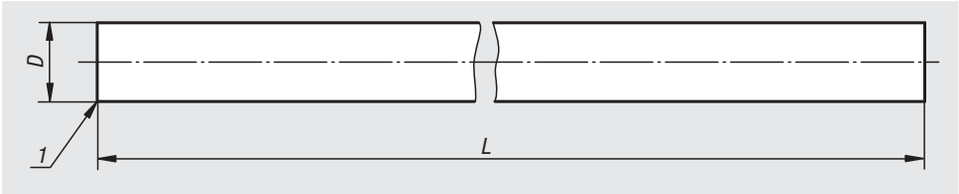

Material:
Steel 1.1213.
stainless steel 1.4034.

Version:
Steel, ground.
Steel, ground and hard-chromed, chrome coating 5 - 10 µm.
Stainless steel, ground.

The precision steel shafts are generally inductively surface hardened.

Sample order:
nlm 21595-012X1000

Note:
The surface value obtained during the inductive hardening process guarantees high surface wear resistance.

On request:
Processing of the ends and cylindrical lateral areas according to customer design.
Lengths up to a max. 4000 mm.

Drawing reference:
1) chamfered

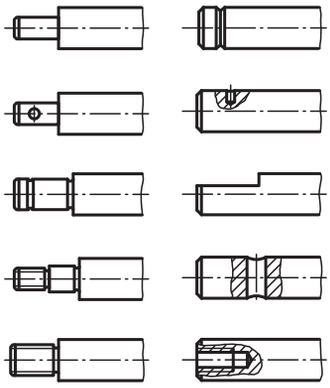

Order No.	Material	Version	D	L	Hardness penetration depth max.	Surface hardness HRC
21595-012X1000	steel	-	12 h6	1000	1,3	62 ±2
21595-016X1000	steel	-	16h6	1000	1,6	62 ±2
21595-020X1000	steel	-	20h6	1000	1,6	62 ±2
21595-025X1000	steel	-	25h6	1000	1,8	62 ±2
21595-030X1000	steel	-	30h6	1000	2	62 ±2
21595-112X1000	steel	hard chromed	12 h7	1000	1,3	65 - 70
21595-116X1000	steel	hard chromed	16h7	1000	1,6	65 - 70
21595-120X1000	steel	hard chromed	20h7	1000	1,6	65 - 70
21595-125X1000	steel	hard chromed	25h7	1000	1,8	65 - 70
21595-130X1000	steel	hard chromed	30h7	1000	2	65 - 70
21595-212X1000	stainless steel	-	12 h6	1000	1,3	51 - 55
21595-216X1000	stainless steel	-	16h6	1000	1,6	51 - 55
21595-220X1000	stainless steel	-	20h6	1000	1,8	51 - 55
21595-225X1000	stainless steel	-	25h6	1000	2	51 - 55
21595-230X1000	stainless steel	-	30h6	1000	2,4	51 - 55

Position indicator

quasi-absolute, mains-independent, indicator accuracy 10 µm, small design

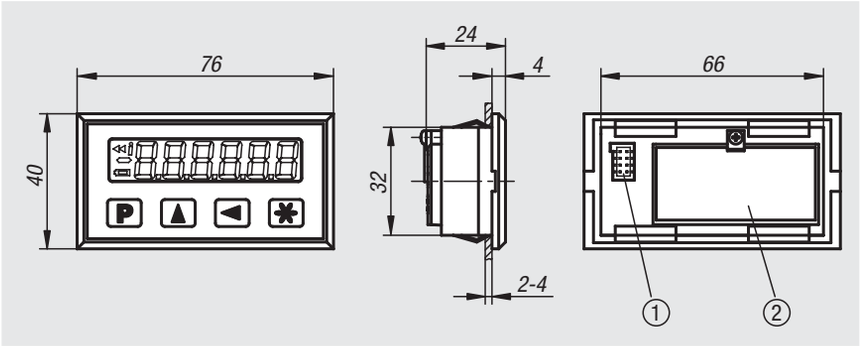

Material:
Housing plastic.
Screen LCD display.

Version:
Position indicator with integrated battery compartment.
Plug-in sensor.
Low-power LCD.

Sample order:
nlm 21700-01

Note:
Digital, mains-independent measurement display for play-free position detection.
The system is often used in industry and trade for measuring tasks on length and angle stops (on panel saws, sheet punches, press breaks...).
The recommended dimensions for switchboard installation are 67+3 x 33+0.3.
The angle display is programmable.
The display is ~11 mm high and scaleable from -999999 to 999999.
The max. display accuracy is 10 µm.
The position indicator features a battery-backed memory and a battery monitoring system with a low-batt symbol at ~2.4 V.
The battery is easy to change via the battery compartment.
Energy is supplied via 2 micro AAA batteries (not supplied).

Temperature range:
- Ambient temperature 0…60°C
- Storage temperature -10…70°C

Assembly:
Installation must be carried out according to the enclosed user information.

Function:
- Chain dimension and reset function
- Direct entry of reference/offset value

Accessories:
- Magnetic sensors 21720
- Magnetic tapes 21725
- Hollow shaft sensors 21730

Attention:
The relative humidity must not exceed 95%. Dewing is not permissible.

Technical data:
- Resolution 0.01; 0.05; 0.1; 1 mm/ 0.001; 0.01 inch
- System accuracy ±(0.1 + 0.01 x L) mm, L in m
- Operating voltage 3 V DC, protected against polarity reversal
- Current consumption ~150 µA at 3 V DC
- Repeat accuracy ±0.01mm
- Travel speed max. 5 m/s
- EMC EN 61000-6-2; EN 61000-6-4
- Rating IP 40, general device
- Rating IP 54, front side

Drawing reference:
1) Sensor connection
2) Battery compartment

Order No.	Description
21700-01	position indicator

Position indicator

quasi-absolute, mains-independent, indicator accuracy 10 µm

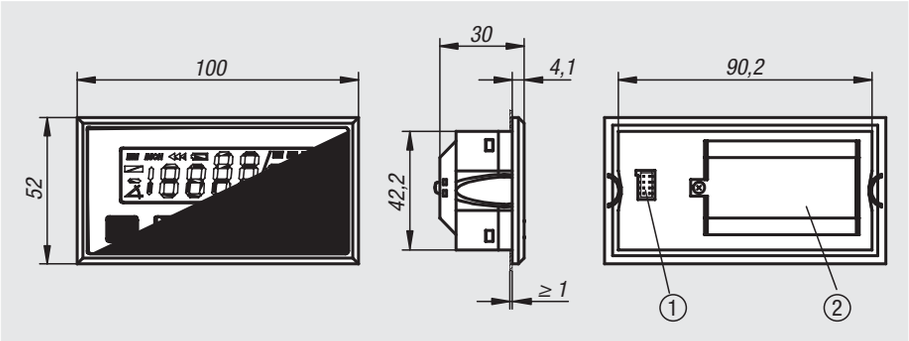

Material:
Housing plastic.
Screen LCD display.

Version:
Position indicators with integrated battery compartment.
Plug-in sensor.
Low-power LCD with decimal and fraction inch function.

Sample order:
nlm 21702-01

Note:
Digital, mains-independent measurement display for play-free position detection.
The system is often used in industry and trade for measuring tasks on length and angle stops (on panel saws, sheet punches, press breaks...).
The recommended dimensions for switchboard installation are 92+0.8 x 45+0.6.
The angle display is programmable.
The display is ~13 mm high and scaleable from -1999999 to 1999999.
The max. display accuracy is 10 µm decimal to 1/64 inch.
The position indicator features a battery-backed memory and a battery monitoring system with a Low-Batt symbol at <1.1 V.
The battery is easy to change via the battery compartment.
Energy is supplied via 2 mignon AA batteries (not supplied).

Temperature range:
- Ambient temperature 0–60°C
- Storage temperature -10–70°C

Assembly:
Installation must be carried out according to the enclosed user information.

Function:
- Chain dimension and reset function
- Direct entry of reference/offset value

Accessories:
- Magnetic sensors 21720
- Magnetic tapes 21725
- Hollow shaft sensors 21730

Attention:
The relative humidity must not exceed 95%. Dewing is not permissible.

Technical data:
- Resolution 0.01; 0.05; 0.1; 1 mm/ 0.001; 0.01; 1/16; 1/32; 1/64
- System accuracy ±(0.1 + 0.01 x L) mm, L in m
- Operating voltage 3 V DC, protected against polarity reversal
- Current consumption ~220 µA at 3 V DC
- Repeat accuracy ±0.01mm
- Travel speed max. 5 m/s
- EMC EN 61000-6-2; EN 61000-6-4
- Rating IP 40, general device
- Rating IP 54, front side

Drawing reference:
1) Sensor connection
2) Battery compartment

Order No.	Description
21702-01	position indicator

Magnetic sensors

passive sensors, miniature design

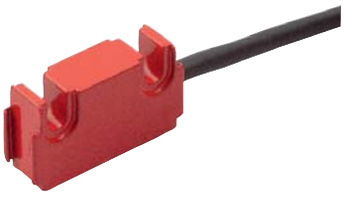

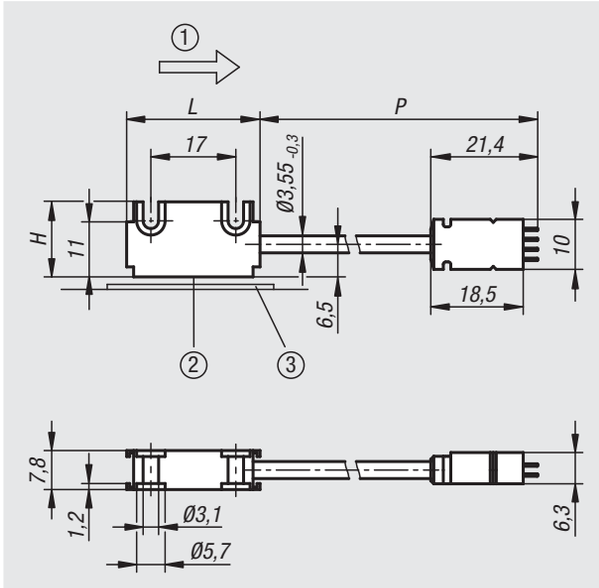

Material:
Housing aluminium.
Cable sheath PVC.

Version:
Compact sensor and plug design.
Flat connector, 8-pole, 1x pin.
Connection cable, 6-wire, ø 3.55–0.3 mm.
Cable bend radius, > 17 mm (static).

Sample order:
nlm 21720-00200

Note:
Works with magnetic tapes 21725.
The reading distance between the sensor and tape must be 0.1 to 2 mm.
The sensor is supplied with operating voltage and draws current via the electronics.
System accuracy, repeat accuracy and travel speed is dependent on the electronics.
Plug-in connection to position indicators 21700 and 21702.

Temperature range:
- Ambient temperature 0…60°C
- Storage temperature -10…70°C

Assembly:
Installation must be carried out using the enclosed user information.
A, reading distance sensor/tape ≤ 2 mm
B, lateral offset ± 2 mm
C, misalignment ± 3°
D, pitch gradient ± 1°
E, lateral gradient ± 3°

Accessories:
Position indicators 21700 and 21702.
Magnetic tapes 21725.

Attention:
Relative humidity 100%. Dewing is not permissible (sensor head).

Technical data:
- Rating IP 67; EN 60529 (sensor head)
- Shock resistance 2000 m/s², 11 ms; EN 60068-2-27
- Vibration resistance 200 m/s², 50 Hz–2 kHz; EN 60068-2-6

Drawing reference:
1) Sine before cosine
2) Active measuring surface
3) Magnetic tape

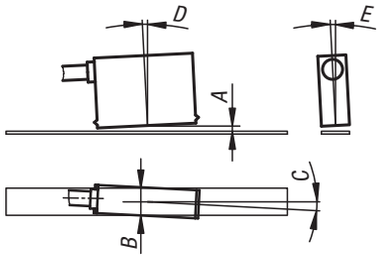

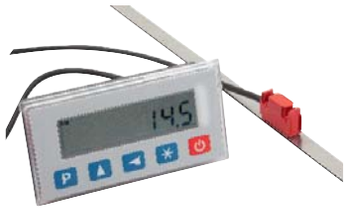

Order No.	P	L	H
21720-00200	200	26,7	15
21720-00500	500	26,7	15
21720-01000	1000	26,7	15
21720-02000	2000	26,7	15
21720-05000	5000	26,7	15
21720-10000	10000	26,7	15

Magnetic tape

scale with incremental coding, 5 mm pole length

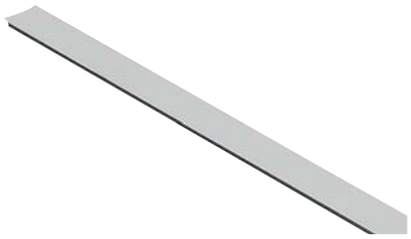

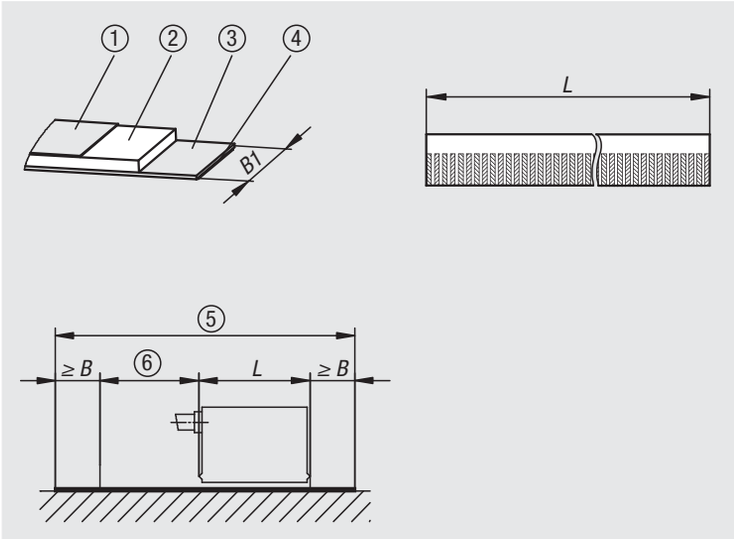

Material:
Magnetic tape, magnetised plastic sheet.
Carrier band steel.
Cover band stainless steel.

Version:
Scale with incremented coding.
Pole length 5 mm.

Sample order:
nlm 21725-010X1000

Note:
Simple adhesive mounting; self-assembly possible.
Required tape length calculated from:
measuring path + sensor length „L“ + (2 x run or return „B“).
L = see drawing of sensor used.
B = 10 mm (run and return).

Temperature range:
- Ambient temperature -20–70°C
- Storage temperature -40–70°C

Assembly:
Installation using the pre-affixed double-sided adhesive tape must be carried out according to the enclosed user information.

On request:
Other lengths from 0.1–100 m, in increments of 0.1 m.

Attention:
Relative humidity 100%. Dewing is not permissible.

Technical data:
- Coefficient of expansion (11 ± 1) x 10-6/K (spring steel)

Drawing reference:
1) Cover band A = 0.176 mm
2) Magnetic tape M = 1.0 mm
3) Carrier band T = 0.3 mm
4) Adhesive tape K = 0.1 mm
5) Required tape length = measuring path + S + 2 x B
6) Measuring path

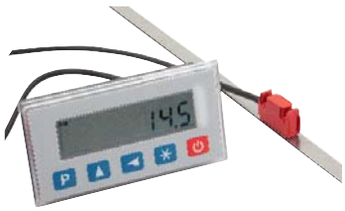

Order No.	B1	L	Precision mm
21725-010X1000	10	1000	0,1
21725-010X2000	10	2000	0,1
21725-010X3000	10	3000	0,1
21725-010X4000	10	4000	0,1
21725-010X5000	10	5000	0,1
21725-010X6000	10	6000	0,1
21725-010X7000	10	7000	0,1
21725-010X8000	10	8000	0,1
21725-010X9000	10	9000	0,1
21725-010X10000	10	10000	0,1

Hollow shaft sensors

with magnetic scanning

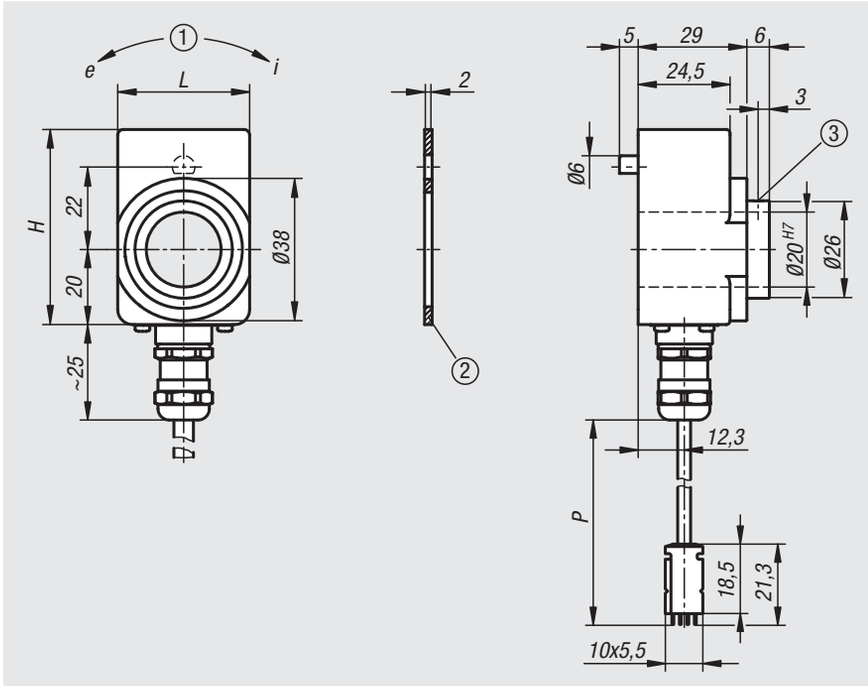

Material:
Shaft stainless-steel.
Housing plastic.
Cable sheath PVC.

Version:
Housing black.
Flat connector, 8-pole, 1x pin.
Cable bend radius, > 17 mm (fixed).

Sample order:
nlm 21730-0500

Note:
For speeds ≤ 600 rpm.
Simple assembly for hollow shafts up to max. 20 mm.
Plug-in connection to position indicators 21700 and 21702.
The sensor is supplied with operating voltage and draws current via the electronics.
The resolution and measuring range are dependent on the electronics.

Temperature range:
- Ambient temperature 0–60°C
- Storage temperature -10–70°C

Assembly:
Installation must be carried out according to the enclosed user information.

Accessories:
Position indicators 21700 and 21702.
Reducer sleeves 21740.

Attention:
Dewing is not permissible.

Technical data:
- Rotative sensor
- Magnetic scanning via a magnet wheel with 18 poles each 5 mm
- Rating IP 65; EN60529

Drawing reference:
1) Direction of rotation
2) Sealing plate
3) Grub screw, M3 (2x120)

Order No.	H	L	P
21730-0500	52	35,2	500
21730-1000	52	35,2	1000
21730-2000	52	35,2	2000

Reducer sleeves

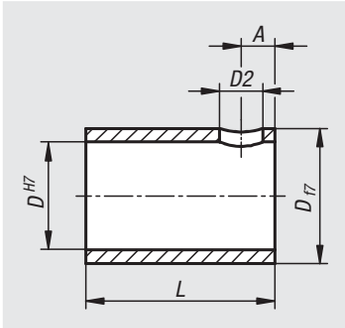

Material:
Stainless steel

Version:
Bright.

Sample order:
nlm 21740-112012

Note:
Reducer sleeves are used to change the diameter between the hollow shaft sensor and adjustment spindle.

Order No.	A	D	D1	D2	L	Suitable for position indicator
21740-112012	3	20	12	3,6	20	-
21740-112014	3	20	14	3,6	20	-
21740-112016	3	20	16	3,6	20	-
21740-112018	3	20	18	3,6	20	-

Notes

Bullseye levels

in frame, to screw on

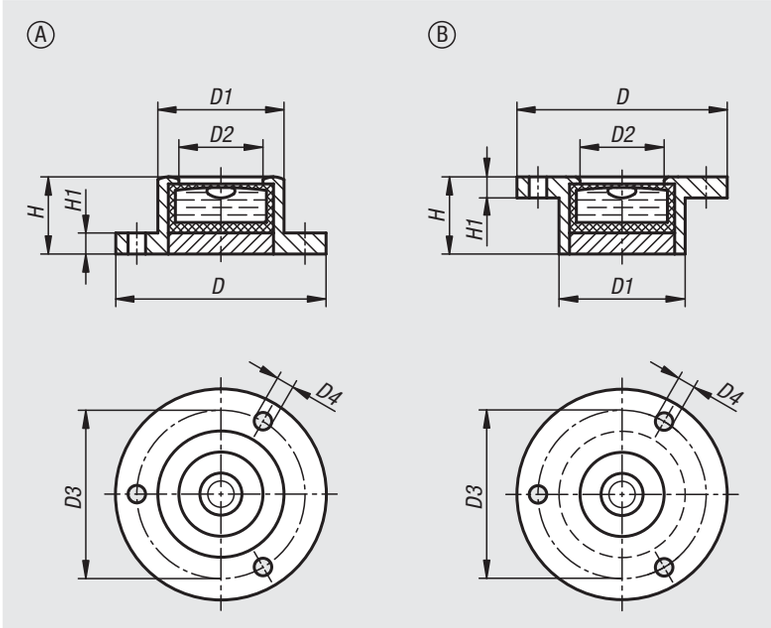

Material:
Frame brass.
Bullseye level body polyamide.

Version:
Nickel-plated and high-gloss polished.

Sample order:
nlm 21800-1141030

Note:
Bubble levels are used as a type of zero indicator instrument for checking horizontal inclination in e.g. spirit levels, inclinometers, metrology instruments and machine constructions.
These bullseye levels can either be screwed down using the three holes (Form A) or recessed (Form B).
- Form A: calibrated to the ground bottom face
- Form B: calibrated to the underside of the flange
- Sensitivity in angular minutes for 2 mm bubble travel
- Clear filling
- Black contrast ring
- White level base

Temperature range:
-35 °C up to +55 °C.

Order No.	Form	Version	D	D1	D2	D3	D4 Ø	H	H1	Sensitivity
21800-1141030	A	with mounting flange	20	14	10	17	1,6	10	1,8	30‘
21800-1171030	A	with mounting flange	25	17	12	21	2	10	2	30‘
21800-1181130	A	with mounting flange	30	18	12	24	2,5	11	3	30‘
21800-1281430	A	with mounting flange	40	28	20	34,5	2,5	14	4	30‘
21800-1341530	A	with mounting flange	50	34	25	43	3	15	5	30‘
21800-2141030	B	inlet flange	20	14	10	17	1,6	10	1,8	30‘
21800-2171030	B	inlet flange	25	17	12	21	2	10	2	30‘
21800-2181130	B	inlet flange	30	18	12	24	2,5	11	3	30‘
21800-2281430	B	inlet flange	40	28	20	34,5	2,5	14	4	30‘
21800-2341530	B	inlet flange	50	34	25	43	3	15	5	30‘

21802

Bullseye levels

in plastic frame

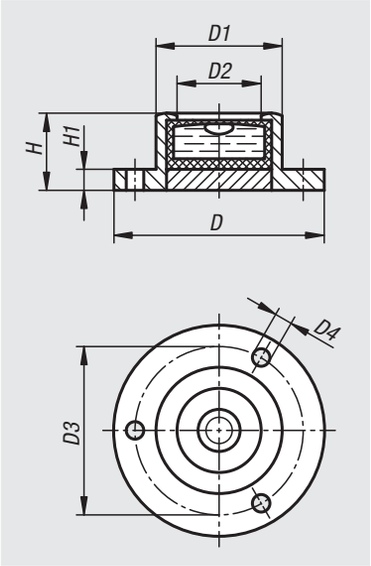

Material:
Frame PMMA.
Bullseye level body acrylic glass.

Version:
black.

Sample order:
nlm 21802-171053

Note:
Bubble levels are used as a type of zero indicator instrument for checking horizontal inclination in e.g. spirit levels, inclinometers, metrology instruments and machine constructions.
These bullseye levels can be mounted using the three fastening holes.
- Calibrated to the ground bottom face
- Sensitivity in angular minutes for 2 mm bubble travel
- Clear filling
- Black contrast ring
- White level base

Temperature range:
-35 °C up to +55 °C.

Order No.	D	D1	D2	D3	D4 Ø	H	H1	Sensitivity
21802-171053	26	17	11	21,5	2,3	10	3	53‘
21802-201140	30	20	14	25	2,3	11	3	40‘
21802-241153	36	24	18,5	29	3,2	11	3	53‘

21804

Bullseye levels

with bead-edged frame

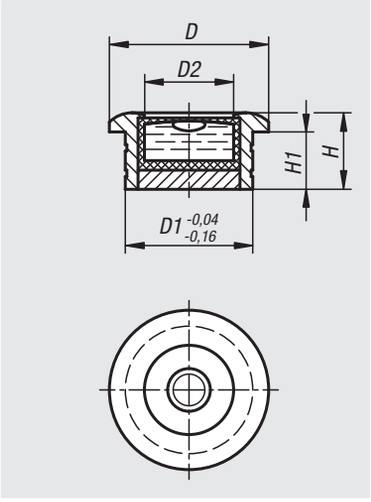

Material:
Frame brass.
Bullseye level body polyamide.

Version:
Nickel-plated and high-gloss polished.

Sample order:
nlm 21804-181030

Note:
Bubble levels are used as a type of zero indicator instrument for checking horizontal inclination in e.g. spirit levels, inclinometers, metrology instruments and machine constructions.
- Sensitivity in angular minutes for 2 mm bubble travel
- The bullseye level is calibrated to underside of the flange
- Bead edge with serrations for recessing
- Clear filling
- Black contrast ring
- White level base

Temperature range:
-35 °C up to +55 °C.

Order No.	D	D1	D2	H	H1	Sensitivity
21804-181030	20	18	12	10	8	30‘
21804-201230	25	20	14	12	9	30‘
21804-281330	30	28	20	13	10	30‘

Bullseye levels

in round frame

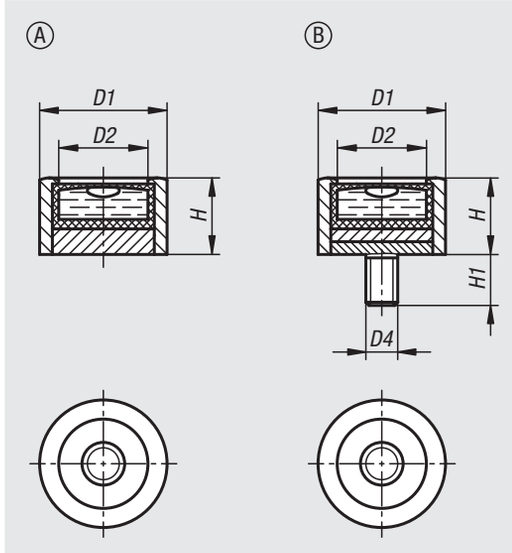

Material:
Frame brass.
Bullseye level body polyamide.

Version:
Nickel-plated and high-gloss polished.

Sample order:
nlm 21806-1140930

Note:
Bubble levels are used as a type of zero indicator instrument for checking horizontal inclination in e.g. spirit levels, inclinometers, metrology instruments and machine constructions.
Form B can be fastened using a grub screw.
- Sensitivity in angular minutes for 2 mm bubble travel
- The bullseye level is calibrated to the seating face of frame
- Various threads are available
- Clear filling
- Black contrast ring
- White level base

Temperature range:
-35 °C up to +55 °C.

Order No.	Form	D1	D2	D4 Ø	H	H1	Sensitivity
21806-1140930	A	14	10	-	9,5	-	30‘
21806-1181130	A	18	12	-	11	-	30‘
21806-1201230	A	20	14	-	12	-	30‘
21806-1301530	A	30	21	-	15	-	30‘
21806-2140730	B	14	10	M4	7,5	5	30‘
21806-2181230	B	18	12	M6	12	5	30‘
21806-2201230	B	20	14	M5	12	8	30‘
21806-2301530	B	30	21	M8	15	10	30‘

Bullseye level body

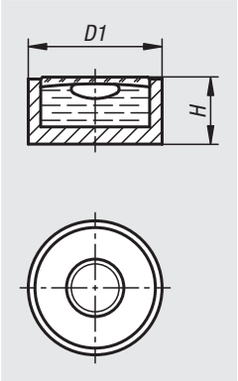

Material:
Bullseye level body stainless steel up to Ø14 mm, then aluminium.
Sight window glass.

Version:
Aluminium black anodized.

Sample order:
nlm 21808-120725

Note:
Bubble levels are used as a type of zero indicator instrument for checking horizontal inclination in e.g. spirit levels, inclinometers, metrology instruments and machine constructions.
Excellent bubble contour, with internal bubble ring to eliminate planar parallaxes.
- Sensitivity in angular minutes for 2 mm bubble travel
- Clear filling

Temperature range:
-35 °C up to +55 °C.

Order No.	Main material	D1	H	Sensitivity
21808-120710	stainless steel	12	6	10‘
21808-120725	stainless steel	12	6	25‘
21808-140710	aluminium	14	6,5	10‘
21808-140720	aluminium	14	6,5	20‘
21808-150710	aluminium	15	6,5	10‘
21808-150720	aluminium	15	6,8	20‘
21808-200810	aluminium	20	8,5	10‘
21808-200820	aluminium	20	8,5	20‘
21808-250910	aluminium	25	8,5	10‘
21808-250920	aluminium	25	8,5	20‘

21810

Bullseye level body

plastic

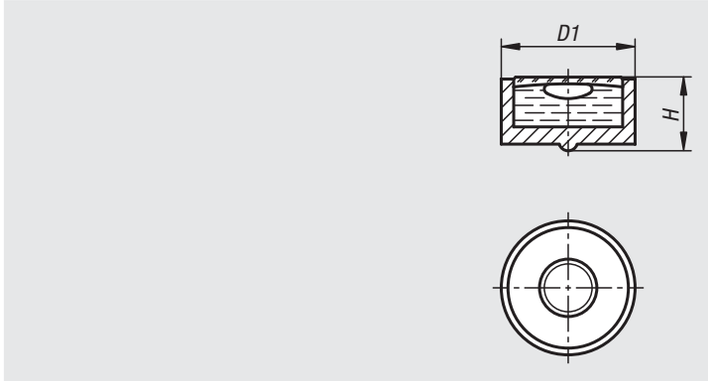

Material:
Polyamide

Version:
Ivory coloured.

Sample order:
nlm 21810-120720

Note:
Bubble levels are used as a type of zero indicator instrument for checking horizontal inclination in e.g. spirit levels, inclinometers, metrology instruments and machine constructions.
With internal black contrast ring for better bubble contour.
- Protruding fill point underneath.
- Sensitivity in angular minutes for 2 mm bubble travel
- Clear filling

Temperature range:
-35 °C up to +55 °C.

Order No.	D1	H	Sensitivity
21810-120720	12	7	20‘
21810-140730	14	7,7	30‘
21810-150720	15	7,7	20‘
21810-180930	18	9,2	30‘
21810-201040	20	10,6	40‘
21810-251230	25	11,5	30‘

21812

Tubular bubble levels

with frame to screw on

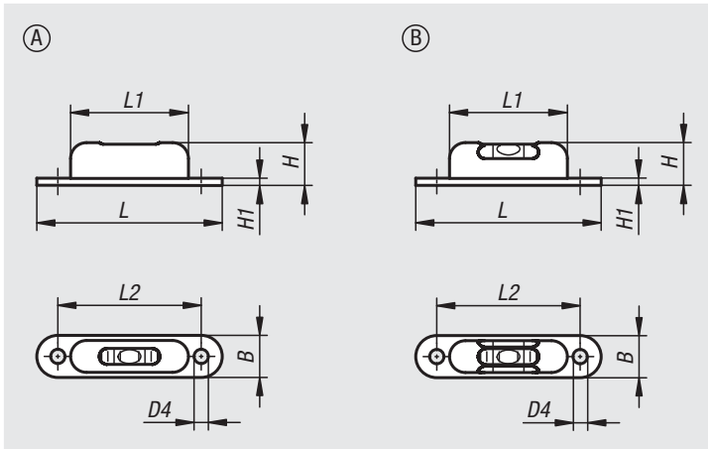

Material:
Frame brass.
Tubular bubble vial glass.

Version:
Nickel-plated and high-gloss polished. Form B: black anodised.

Sample order:
nlm 21812-1571350

Note:
Bubble levels are used as a type of zero indicator instrument for checking horizontal inclination in e.g. spirit levels, inclinometers, metrology instruments and machine constructions.
The tubular levels can be fastened using the two holes.
- Form A: one sight window
- Form B: three sight windows
- Sensitivity in angular minutes for 2 mm bubble travel
- Green filling

Temperature range:
-35 °C up to +55 °C.

Order No.	Form	B	D4 Ø	H	H1	L Nom. length	L1	L2	Sensitivity
21812-1571350	A	12,3	4,5	13	1	57	37	45	50‘
21812-2571305	B	12,3	4,5	13	1	57	37	45	5‘

Linear scales

self-adhesive, stainless steel

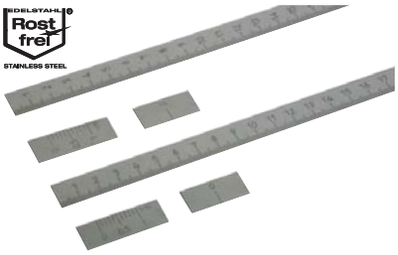

Material:
Stainless steel 1.4310.

Version:
Bright.

Sample order:
nlm 21880-000010X0300 (include length L)

Note:
Rigid design stainless steel linear scales with self-adhesive back.
Cross section 15 x 1 mm.

Matt surface and black high contrast graduations. The graduations are deep lasered.

On request:
– Zero mark lower right or centre
– Graduations upper right or both sides
– Other lengths

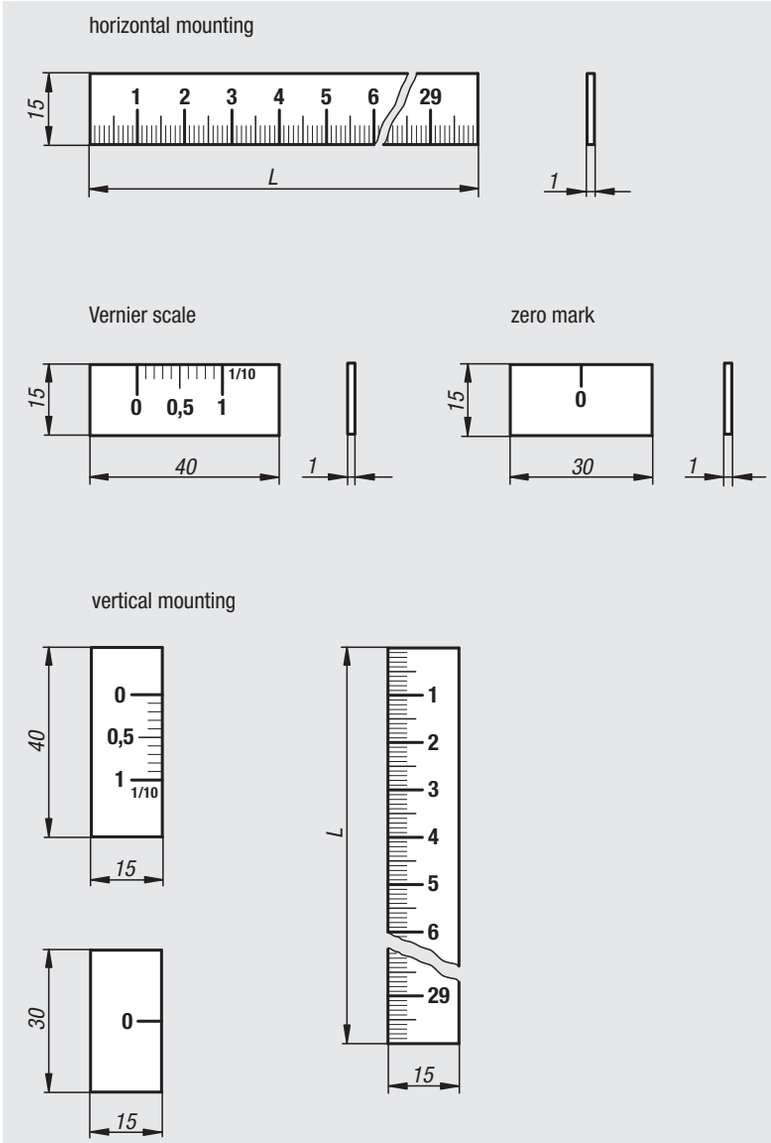

Linear scales self-adhesive, stainless steel

Order No.	Version	Assembly position	Zero point	Division	Graduations	L
21880-000010X	scale	horizontal	left	1 mm	bottom	300/500/700/1000
21880-010010X	scale	vertical	top	1 mm	left	300/500/700/1000

Vernier scale and zero reference, self-adhesive, stainless steel

Order No.	Version	Assembly position	Zero point	Graduations
21880-0001	vernier scale	horizontal	left	top
21880-0101	vernier scale	vertical	top	right
21880-00	zero reference mark	horizontal	-	-
21880-01	zero reference mark	vertical	-	-

Linear scales

self adhesive or with screw holes, aluminium

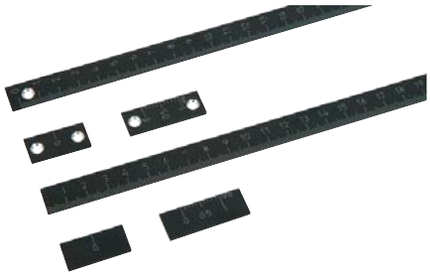

Material:
Aluminium.

Version:
Black anodized

Sample order:
nlm 21882-000010X0250 (include length L)

Note:
Rigid design aluminium linear scales with self-adhesive back or with screw holes.
Cross section 15 x 2 mm.

Black anodized surface and high contrast graduations for legibility without shading. The graduations are deep lasered.

On request:
– Zero mark lower right or centre
– Graduations upper right or both sides
– Other lengths

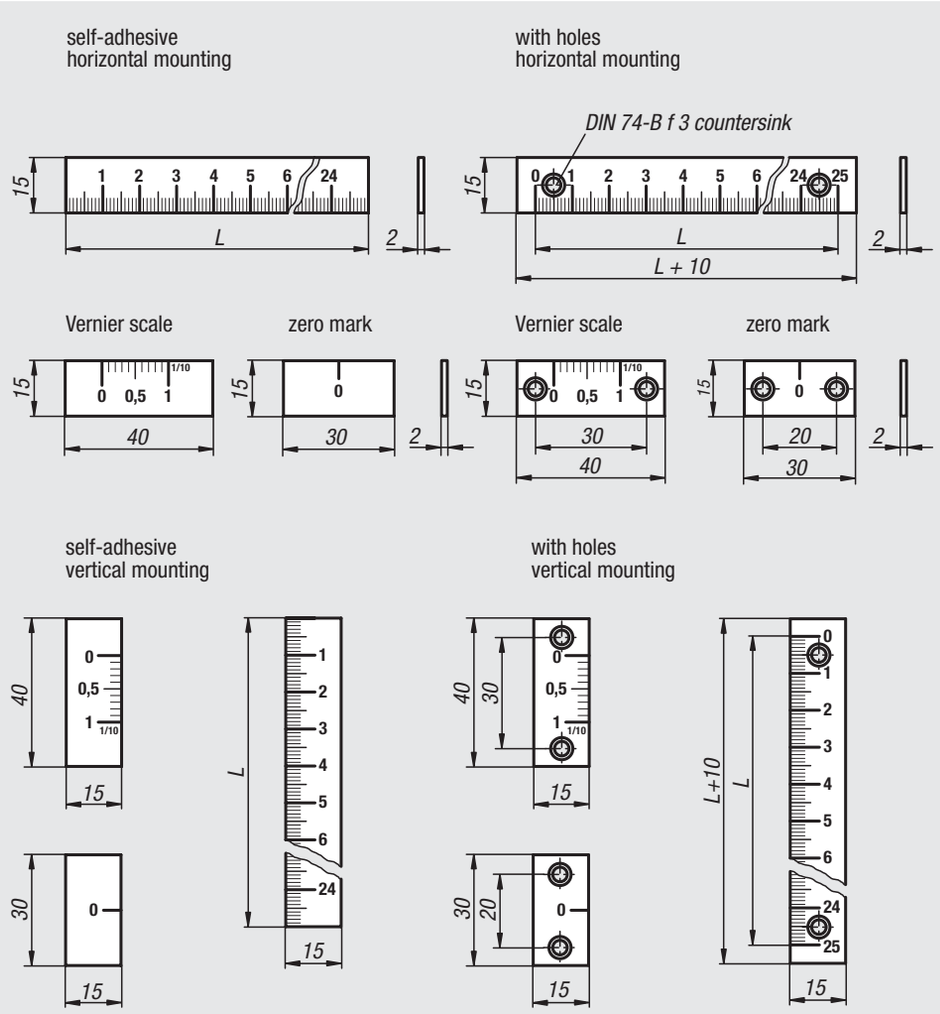

Length L	No. of holes
250	2
500	3
750	4
1000	5

Linear scales, self adhesive or with screw holes, aluminium

Order No. self adhesive	Order No. with hole	Version	Assembly position	Zero point	Division	Graduations	L
21882-000010X	**21882-100010X**	scale	horizontal	left	1 mm	bottom	250/500/750/1000
21882-010010X	**21882-110010X**	scale	vertical	top	1 mm	left	250/500/750/1000

Vernier scale and zero reference, self adhesive or with holes, aluminium

Order No. self adhesive	Order No. with hole	Version	Assembly position	Zero point	Graduations
21882-0001	**21882-1001**	vernier scale	horizontal	left	top
21882-0101	**21882-1101**	vernier scale	vertical	top	right
21882-00	**21882-10**	zero reference mark	horizontal	-	-
21882-01	**21882-11**	zero reference mark	vertical	-	-

Linear scales

self-adhesive or with screw holes, aluminium

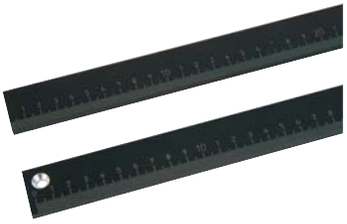

Material:
Aluminium.

Version:
Scale surface ground and black anodized

Sample order:
nlm 21884-000010X0500 (include length L)

Note:
Rigid, heavy-duty design aluminium linear scales.
Cross section 30 x 6 mm.

Black anodized surface and high contrast graduations for legibility without shading.
The graduations are deep lasered.

On request:
– Zero mark right or centre
– Graduations top or both sides
– Other lengths

Drawing reference:
1) counterbore to DIN 74-B f 5

self-adhesive

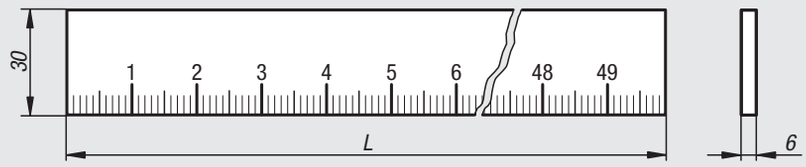

with holes

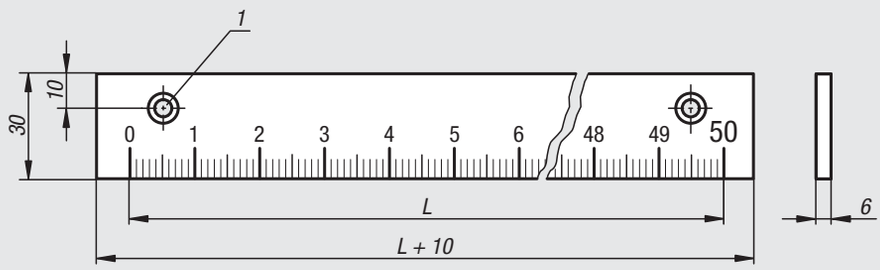

Length L	No. of holes
500	2
1000	3

Order No. self adhesive	Order No. with hole	Assembly position	Zero point	Division	Graduations	L
21884-000010X	**21884-100010X**	horizontal	left	1 mm	bottom	500/1000

Position indicators

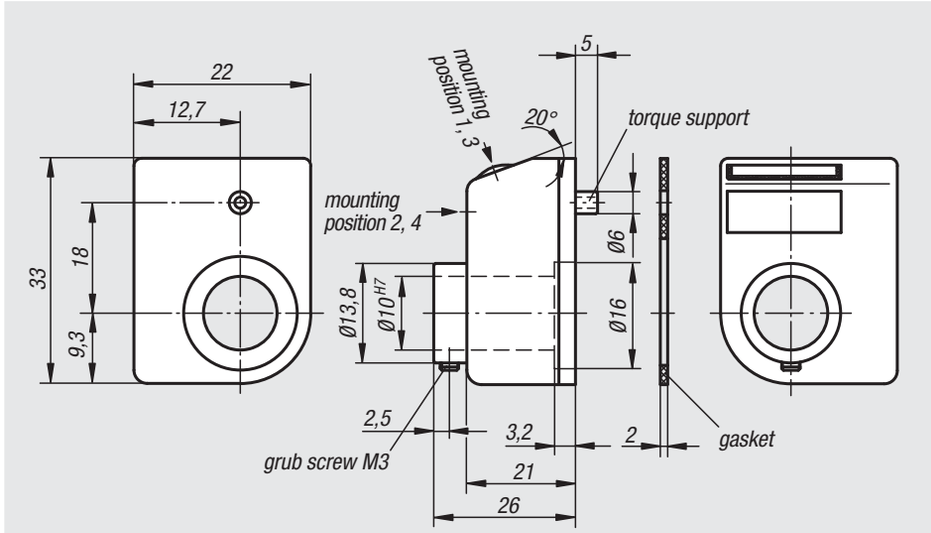

Material:
Housing polyamide 6.
Hollow shaft steel.
Screen plastic.
Grub screw steel.

Version:
Impact-resistant housing.
Hollow shaft black oxidised.
Grub screw black.
Dial black, digits white.

Sample order:
nlm 21901-01001111
(Position indicator with 1 mm pitch, decimal point in first position from the right, assembly position 1, direction of count ascending clockwise, colour orange)

Note:
Position indicators allow direct reading of input measurement values at a glance.
In addition, the value indicated per spindle rotation (corresponding spindle pitch) can be selected and the various indicator values are realised by a transmission gear. The position indicators are distinguished by their small construction with very clear display.
They are especially suitable for small spindle distances and small shaft diameters and have a torque support that is positioned in a hole on the side.

** At the 1st asterisk give assembly position and at the 2nd asterisk give the count direction (see sample order “assembly position, count direction”).

On request:
– Stainless steel driveshaft
– Indicator for inch

Accessories:
– Reducing bushes 21940

Technical data:
– Counter consisting of 3 10-position dials
– Height of figures about 4 mm
– Hollow shaft Ø 10 H7 mm
– Temperature resistant to 80 °C
– Oil and solvent resistant

Display after one rotation, with decimal point:

e. g. 21901-**01001**111
0100 = 1mm increments
1 = decimal places

Mounting position (1 - 4):

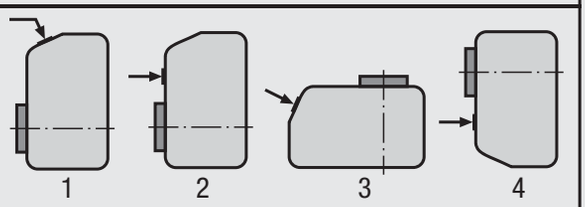

e. g. 21901-01001**1**11
= mounting position **1**

Count direction (1 - 2):

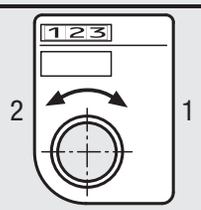

e. g. 21901-01001**1**1
1 = clockwise (ascending values)
2 = anticlockwise (ascending values)

Colour (1 - 2):

e. g. 21901-0100111**1**
1 = orange
2 = black

Order No. orange	Order No. black	Pitch	Indicator after one rotation	Decimal point in position	max. speed rpm
21901-010011**	**21901-01001**2**	1	01,0	1	500
21901-020011**	**21901-02001**2**	2	02,0	1	500
21901-025011**	**21901-02501**2**	2,5	02,5	1	500
21901-030011**	**21901-03001**2**	3	03,0	1	500
21901-040011**	**21901-04001**2**	4	04,0	1	375
21901-050011**	**21901-05001**2**	5	05,0	1	300
21901-060011**	**21901-06001**2**	6	06,0	1	250
21901-080011**	**21901-08001**2**	8	08,0	1	180
21901-100011**	**21901-10001**2**	10	10,0	1	150

Position indicators

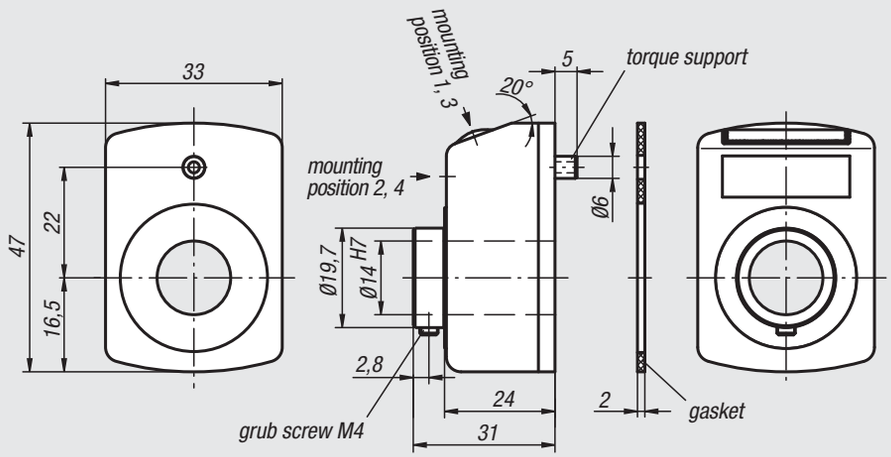

Material:
Housing polyamide 6.
Hollow shaft steel.
Screen plastic.
Grub screw steel.

Version:
Impact-resistant housing.
Hollow shaft black oxidised.
Grub screw black.
Dial black, digits white.

Sample order:
nlm 21902-01002111
(Position indicator with 1 mm pitch, decimal point in second position from the right, assembly position 1, direction of count ascending clockwise, colour orange)

Note:
Position indicators allow direct reading of input measurement values at a glance.
In addition, the value indicated per spindle rotation (corresponding spindle pitch) can be selected and the various indicator values are realised by a transmission gear. The position indicators are distinguished by their small construction with very clear display and fine scale.
They are especially suitable for small spindle distances and small shaft diameters and have a torque support that is positioned in a hole on the side.

** At the 1st asterisk give assembly position and at the 2nd asterisk give the count direction (see sample order “assembly position, count direction”).

On request:
– Counter cover made of mineral glass
– Stainless steel driveshaft
– Axial sealing (dust-proof)
– Vibration protection

Accessories:
– Reducing bushes 21940
– Insert plate 21942
– Mounting plates 21944

Technical data:
– Counter consisting of 4 10-position dials + fine scale
– Height of figures about 6 mm
– Hollow shaft Ø 14 H7 mm
– Temperature resistant to 80 °C
– Oil and solvent resistant

Display after one rotation, with decimal point:	Mounting position (1 - 4):
	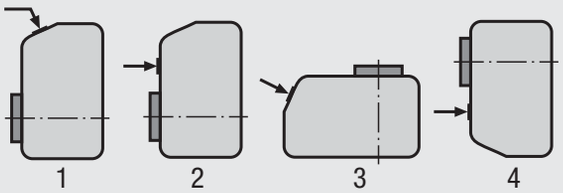
e. g. 21902-**01002**111 **0100** = 1 mm increments **2** = decimal places	e. g. 21902-01002**1**11 = mounting position **1**

Count direction (1 - 2):	Colour (1 - 2):
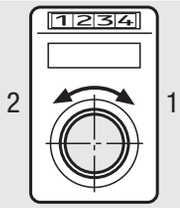	
e. g. 21902-01002**1**1 **1** = clockwise (ascending values) **2** = anticlockwise (ascending values)	e. g. 21902-01002111 **1** = orange **2** = black

Order No. orange	Order No. black	Pitch	Indicator after one rotation	Decimal point in position	max. speed rpm
21902-010021**	**21902-01002**2**	1	00,10	2	500
21902-010011**	**21902-01001**2**	1	001,0	1	500
21902-012511**	**21902-01251**2**	1,25	001,2/5	1	500
21902-015011**	**21902-01501**2**	1,5	001,5	1	500
21902-020011**	**21902-02001**2**	2	002,0	1	500
21902-025011**	**21902-02501**2**	2,5	002,5	1	500
21902-030011**	**21902-03001**2**	3	003,0	1	500
21902-040011**	**21902-04001**2**	4	004,0	1	375
21902-050011**	**21902-05001**2**	5	005,0	1	300
21902-060011**	**21902-06001**2**	6	006,0	1	250
21902-080011**	**21902-08001**2**	8	008,0	1	180
21902-100011**	**21902-10001**2**	10	010,0	1	150

Position indicators

Material:
Housing polyamide 6.
Hollow shaft steel.
Screen plastic.
Grub screw steel.

Version:
Impact-resistant housing.
Hollow shaft black oxidised.
Grub screw black.
Dial black, digits white.

Sample order:
nlm 21904-01002111
(Position indicator with 1 mm pitch, decimal point in second position from the right, assembly position 1, direction of count ascending clockwise, colour orange)

Note:
Position indicators allow direct reading of input measurement values at a glance.
In addition the value indicated per spindle rotation (corresponding spindle pitch) can be selected and the various indicator values are realised by a transmission gear.
The position indicators are distinguished by their very clear display and fine scale. They have a torque support that is positioned in a hole on the side.

** At the 1st asterisk give assembly position and at the 2nd asterisk give the count direction (see sample order "assembly position, count direction").

On request:
– Counter cover made of mineral glass
– Stainless steel driveshaft
– Axial sealing (dust-proof)
– Waterproof
– Vibration protection

Accessories:
– Reducing bushes 21940
– Insert plate 21942
– Mounting plates 21944

Technical data:
– Counter consisting of 5 10-position dials + fine scale
– Height of figures about 7 mm
– Hollow shaft Ø 20 H7 mm
– Temperature resistant to 80 °C
– Oil and solvent resistant
– Dust-proof

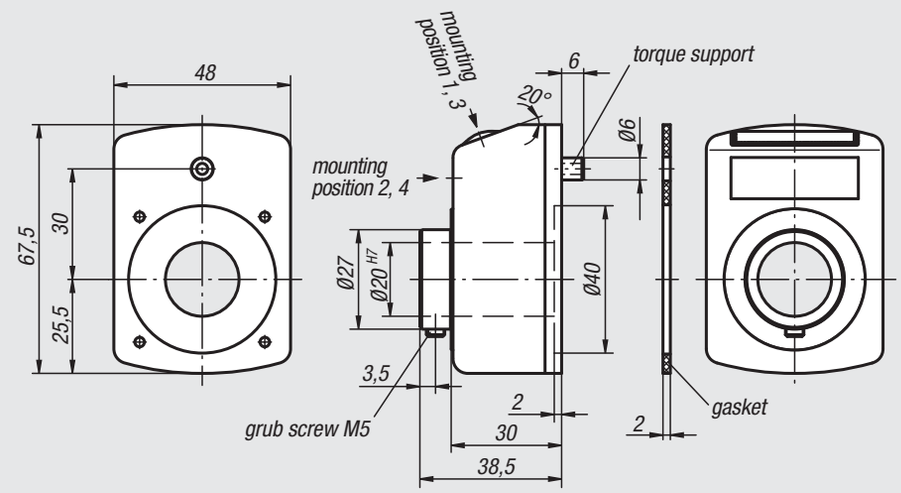

Display after one rotation, with decimal point:	Mounting position (1 - 4):
	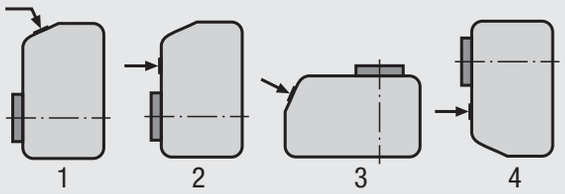
e. g. 21904-**01002**111 **0100** = 1 mm increments **2** = decimal places	e. g. 21904-01002**1**11 = mounting position **1**

Count direction (1 - 2):	Colour (1 - 2):
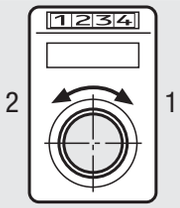	
e. g. 21904-01002**1**1 **1** = clockwise (ascending values) **2** = anticlockwise (ascending values)	e. g. 21904-01002111 **1** = orange **2** = black

Order No. orange	Order No. black	Pitch	Indicator after one rotation	Decimal point in position	max. speed rpm
21904-010021**	**21904-01002**2**	1	000,10	2	500
21904-010011**	**21904-01001**2**	1	0001,0	1	500
21904-015011**	**21904-01501**2**	1,5	0001,5	1	500
21904-020011**	**21904-02001**2**	2	0002,0	1	500
21904-025011**	**21904-02501**2**	2,5	0002,5	1	500
21904-030011**	**21904-03001**2**	3	0003,0	1	500
21904-040011**	**21904-04001**2**	4	0004,0	1	450
21904-050011**	**21904-05001**2**	5	0005,0	1	300
21904-060011**	**21904-06001**2**	6	0006,0	1	250
21904-100011**	**21904-10001**2**	10	0010,0	1	150

Position indicators

freely programmable

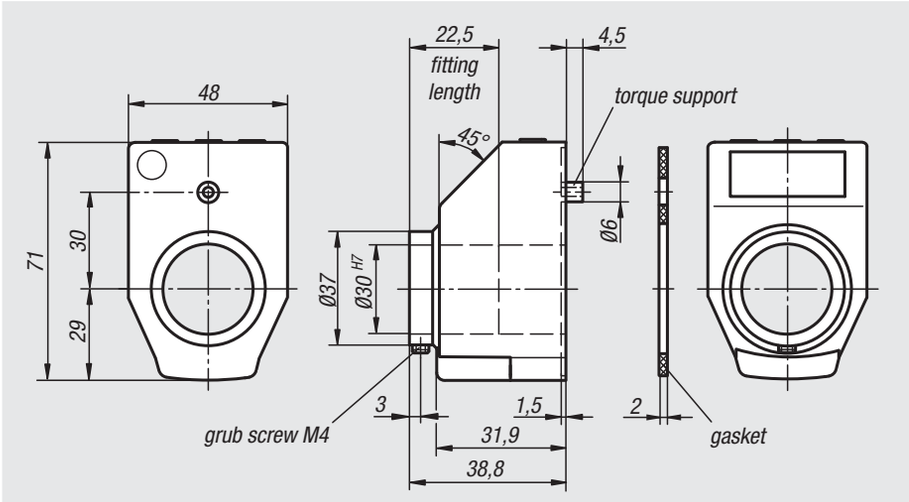

Material:
Housing plastic.
Hollow shaft steel.
Screen LCD display.
Grub screw steel.

Version:
Hollow shaft black oxidised.
Grub screw black.

Sample order not programmed:
nlm 21922-12
(Position indicator with assembly position 1, colour black)

Sample order programmed:
nlm 21922-0200021120
(see ordering example on the next page)

Note:
The electronic position indicators offer diverse opportunities compared to mechanical position indicators because they display angles as well as uncommon spindle pitches and record each fraction of spindle movement.

* Freely programmable parameters using the programming software 21922-09.

Features:
– indicated value and decimal point freely programmable
– linear or angle mode
– function key for zero-point position
– function key for switching between the absolute dimension and chain dimension
– programming of an offset value directly at the device
– easy battery change

Accessories:
– reducing bushes 21940
– programming software 21922-09

Technical data:
– LCD Display with 5 digits
– Digit size approx. 11.5 mm
– Display range from -19999 ... 99999
– Tunular shaft Ø 30 H7 mm
– Operating temperature -10 °C to +60 °C
– Storage temperature -30 °C to +80 °C
– Revolution max. 600 rpm
– Lithium battery Button cell 3V, type CR 2032. service life approx. 2 years
– Vibration-resistance according to DIN IEC 68-2-6 10 g / (5 ... 150 Hz), 20 g / (100 ... 2000 Hz)
– Shock-resistance according to DIN IEC 68-2-27 30 g / 15 ms
– EMC DIN EN 61000-4-2; DIN EN 61000-4-4
– Type of protection IP 51

Position indicators programmed

Order No.	Version
21922-	See sample order for position Indicators programmed

Position indicators not programmed*

Order No.	Colour	Assembly position	Pitch	Indicator after one rotation	Decimal point in position	Count direction	Zero-point position	Order No. software
21922-11	orange	1	freely programmable	freely programmable	freely programmable	freely programmable	freely programmable	21922-09
21922-12	black	1	freely programmable	freely programmable	freely programmable	freely programmable	freely programmable	21922-09
21922-31	orange	3	freely programmable	freely programmable	freely programmable	freely programmable	freely programmable	21922-09
21922-32	black	3	freely programmable	freely programmable	freely programmable	freely programmable	freely programmable	21922-09

Position indicators

freely programmable

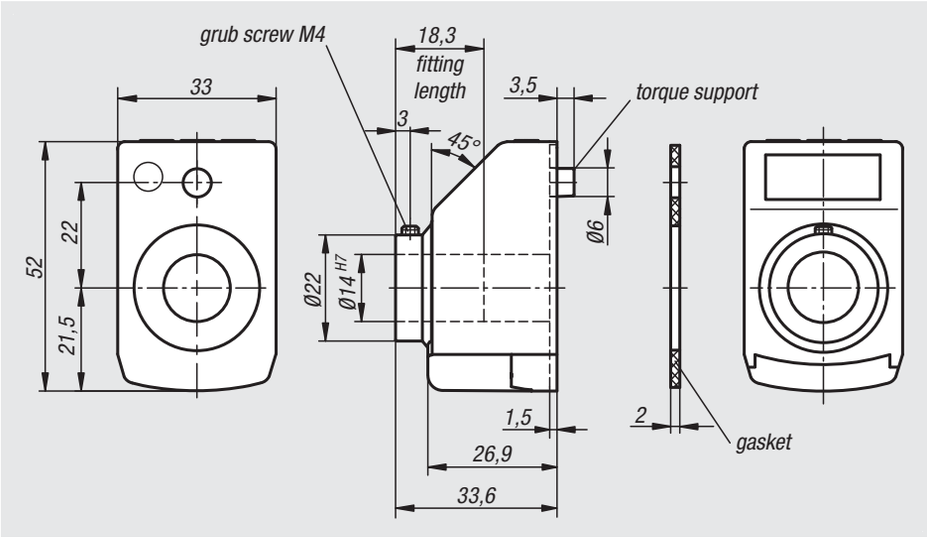

Material:
Housing plastic.
Hollow shaft steel.
Screen LCD display.
Grub screw steel.

Version:
Hollow shaft black oxidised.
Grub screw black.

Sample order not programmed:
nlm 21923-12
(Position indicator with mounted position 1, colour black)

Sample order programmed:
nlm 21923-0200021120
(see ordering example on the next page)

Note:
The electronic position indicators offer diverse opportunities compared to mechanical position indicators because they display angles as well as uncommon spindle pitches and record each fraction of spindle movement.

* Freely programmable parameters using the programming software 21922-09.

Features:
– indicated value and decimal point freely programmable
– linear or angle mode
– function key for zero-point position
– function key for switching between the absolute dimension and chain dimension
– programming of an offset value directly at the device
– easy battery change

Accessories:
– reducing bushes 21940
– programming software 21922-09

Technical data:
– LCD Display with 5 digits
– Digit size approx. 8 mm
– Display range from -19999 ... 99999
– Hollow shaft Ø 14 H7 mm
– Operating temperature -10 °C to +60 °C
– Storage temperature -30 °C to +80 °C
– Revolution max. 600 rpm
– Lithium battery button cell 3V, type CR 2032. service life ca. 2 years
– Vibration-resistance acc. to DIN IEC 68-2-6 10 g / (5 ... 150 Hz), 20 g / (100 ... 2000 Hz)
– Shock-resistance acc. to DIN IEC 68-2-27 30 g / 15 ms
– EMC DIN EN 61000-4-2; DIN EN 61000-4-4
– Protection IP 51

Position indicators programmed

Order No.	Version
21923-	See sample order for position Indicators programmed

Position indicators not programmed*

Order No.	Colour	Assembly position	Pitch	Indicator after one rotation	Decimal point in position	Count direction	Zero-point position	Order No. software
21923-11	orange	1	freely programmable	freely programmable	freely programmable	freely programmable	freely programmable	21922-09
21923-12	black	1	freely programmable	freely programmable	freely programmable	freely programmable	freely programmable	21922-09
21923-31	orange	3	freely programmable	freely programmable	freely programmable	freely programmable	freely programmable	21922-09
21923-32	black	3	freely programmable	freely programmable	freely programmable	freely programmable	freely programmable	21922-09

Sample order
for Position Indicators programmed 21922 and 21923

Order code:

21922-_ _ _ _ _ _ _ _ _ _ _ _

Indicator after one rotation:

e.g.
21922-**02000**21120
Please indicate here which value is to be displayed after one rotation (this is usually the spindle pitch).

Important:
Please note the decimal point position!

Angle mode:
(resolution 0.1°)
If you want the display to be in angle mode, enter 03600.

The display in angle mode is 03600 after one rotation and returns to 00000 for the next rotation.

Decimal point position:

e.g.
21922-0200**0**21120
Please indicate here how many decimal places you require.

0 = 00000
1 = 0000.0
2 = 000.00
3 = 00.000

Angle mode:
If you want the display to be in angle mode, the decimal point is best put in position 1.

This means the display shows the value 0360.0 after one rotation.

Assembly position:

e.g.
21922-020002**1**120
1 = Mounting position for horizontal spindle
3 = Mounting position for vertical spindle

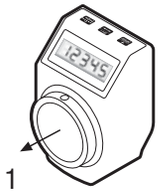

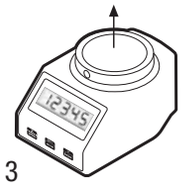

Count direction:

e.g.
21922-020002**1**120
1 = clockwise (ascending values)
2 = anticlockwise (ascending values)

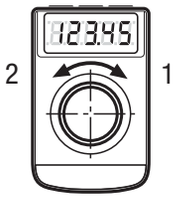

Colour:

e.g.
21922-02000211**2**0
1 = orange
2 = black

Zero-point position:

e.g.
21922-0200021120
0 = directly
5 = delayed by 5 sec.

The Zero-point position can be delayed by 5 sec. by means of a parameter, in order to avoid accidental zero setting.

Application using position indicators

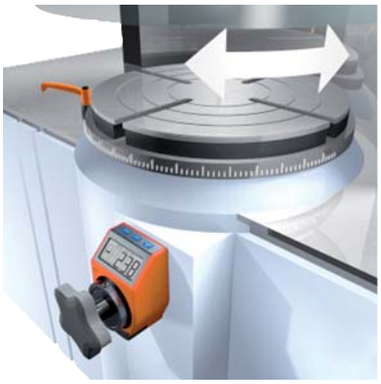

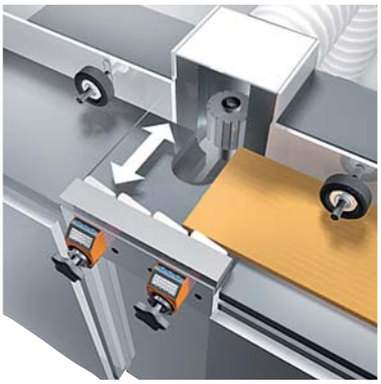

21940

Reducing bushings

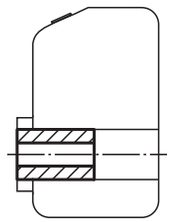

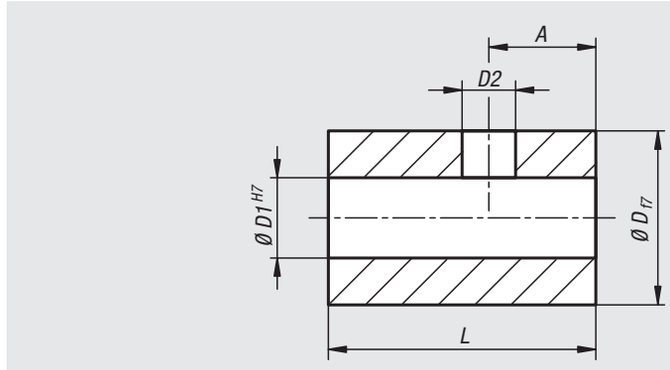

Material:
Steel.

Version:
Black oxidised.

Sample order:
nlm 21940-14**08** (include Ø D1=8)

Note:
Reducing bushes are used for adapting the diameter between position indicator and positioning spindle.

Order No.	A	D	D1	D2	L	Suitable for position indicator
21940-10**	2,5	10	6/8	3,2	14	21901
21940-14**	3,5	14	6/8/10/12	4,2	17	21902, 21952
21940-20**	4,5	20	12/14/16/18	5,5	20	21904
21940-30**	4	30	12/14/16/18/20/25	5,5	30	21922

21942

Intermediate plates

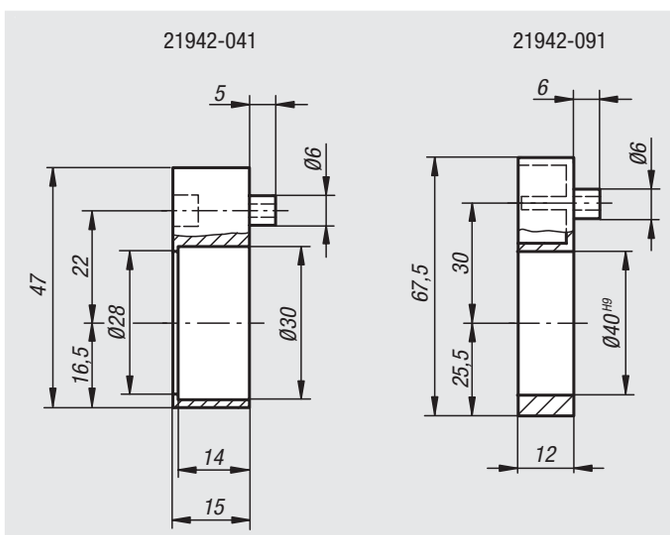

Material:
Plastic

Sample order:
nlm 21942-041

Note:
Intermediate plates are used for mounting shaft collars and radial shaft seals.

Order No.	Suitable for position indicator
21942-041	21902, 21923
21942-091	21904, 21922

Mounting brackets

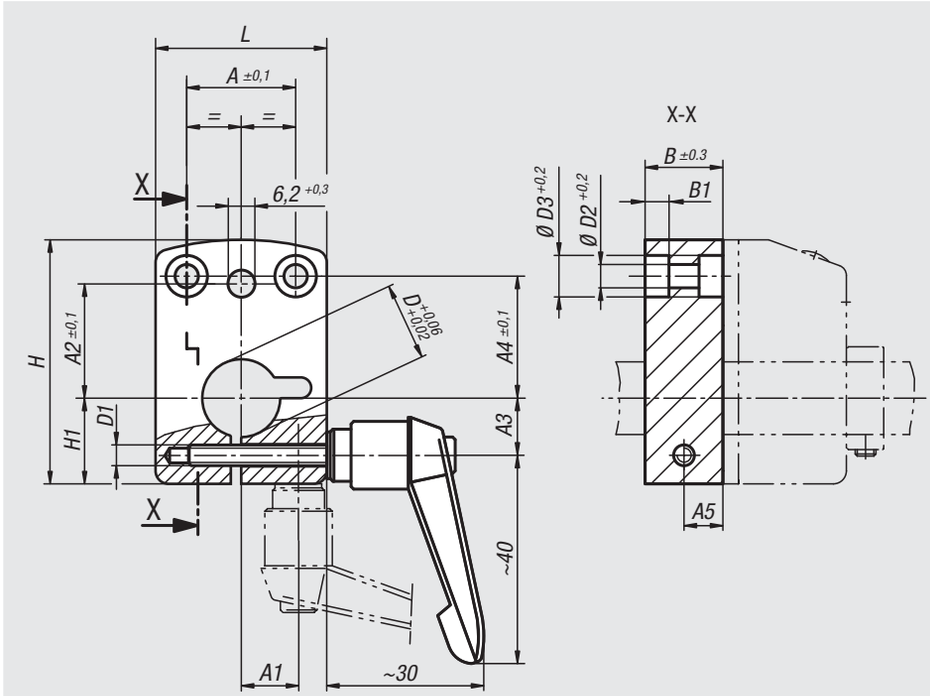

Material:
Mounting position 1, housing die-cast zinc
Mounting position 3, housing aluminium.

Clamping lever plastic.

Version:
Housing anodized.
Clamping lever black grey.

Sample order:
nlm 21944-09121

Note:
Mounting brackets and position indicators form a compact unit. The brackets guarantee reliable spindle clamping without additional construction work.
The simple assembly allows the retrofitting on existing equipment.

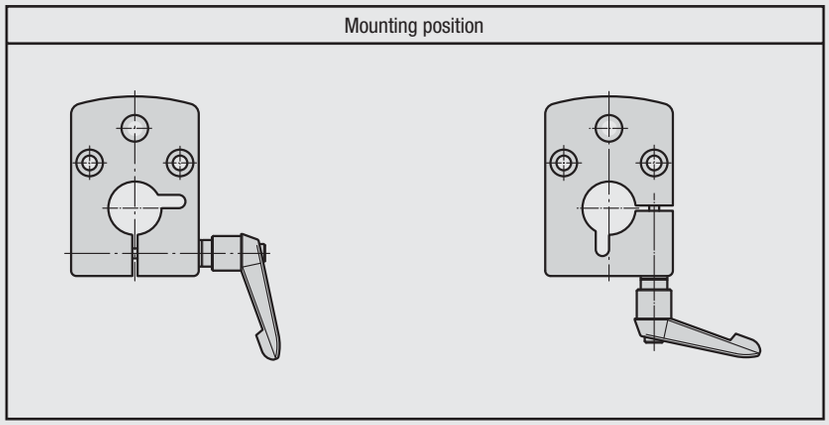

21944-....**1** 21944-....**3**

Order No. assembly position 1	Order No. assembly position 3	A	A1	A2	A3	A4	A5	B	B1	D	D1	D2	D3	H	H1	L	Suitable for position indicator
21944-04081	**21944-04083**	21	-/11	22	11/-	23,5	7,5	15	4,6	8	M4	4,5	8	47	16,5	33	21902
21944-04101	**21944-04103**	21	-/11	22	11/-	23,5	7,5	15	4,6	10	M4	4,5	8	47	16,5	33	21902
21944-04121	**21944-04123**	21	-/11	22	11/-	23,5	7,5	15	4,6	12	M4	4,5	8	47	16,5	33	21902
21944-04141	**21944-04143**	21	-/11	22	11/-	23,5	7,5	15	4,6	14	M4	4,5	8	47	16,5	33	21902
21944-09121	**21944-09123**	34	-/17	30	17/-	17	10	20	5,5	12	M5	5,5	10	67,5	25,5	48	21904
21944-09141	**21944-09143**	34	-/17	30	17/-	17	10	20	5,5	14	M5	5,5	10	67,5	25,5	48	21904
21944-09161	**21944-09163**	34	-/17	30	17/-	17	10	20	5,5	16	M5	5,5	10	67,5	25,5	48	21904
21944-09201	**21944-09203**	34	-/17	30	17/-	17	10	20	5,5	20	M5	5,5	10	67,5	25,5	48	21904

Adjusting knobs with position indicator

digital display

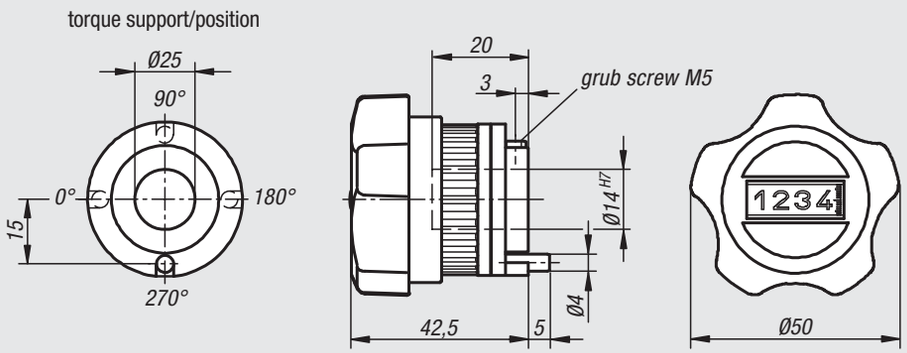

Material:
Housing plastic.
Hollow shaft steel.
Screen plastic.

Version:
Housing fibreglass reinforced.
Hollow shaft black oxidised.

Sample order:
nlm 21952-01501112
(Adjusting knob with 1.5 mm pitch, decimal point in first position from the right, torque support at 270°, direction of count ascending clockwise, colour black)

Note:
Adjusting knobs with integrated position indicators allow direct readout of set measurement values such as lengths, flow rates, speeds, etc, at a glance. In addition, the display value can be selected per spindle rotation (corresponding spindle pitch), with the different display values being realized by a variable ratio transmission. The torque support allows the use of the adjusting knobs in any assembly position, even in case of high vibrations.

** At the 1st asterisk give torque support and at the 2nd asterisk give the count direction (see sample order „torque support, count direction“).

On request:
Other pitches

Accessories:
– Reducing bushes 21940

Technical data:
– Counter consisting of 4 10-position dials + fine scale
– Height of figures about 6 mm
– Hollow shaft Ø 14 H7 mm
– Temperature resistant to 80 °C
– Oil and solvent resistant

Indicator after one rotation, decimal point position:

order number	for pitch	display
0150	1.5	001,5
0200	2	002,0
0400	4	004,0
0500	5	005,0
1000	10	010,0

e. g. 21952-**01501**112
0150 = 1.5 mm pitch
1 = decimal point at the 1st position from the right

Torque support (1 - 4):

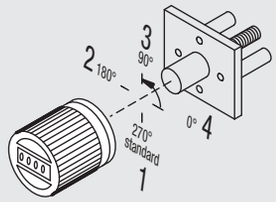

e.g. 21952-01501**1**12
1 = 270° (standard)

Count direction (1 - 2):

e.g. 21952-01501**1**12
1 = clockwise (ascending values)
2 = anticlockwise (ascending values)

Colour (1 - 2):

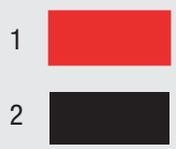

e.g. 21952-01501**11**2
1 = red
2 = black

Order No. red	Order No. black	Pitch	Indicator after one rotation	Decimal point in position
21952-015011**	**21952-01501**2**	1,5	001,5	1
21952-020011**	**21952-02001**2**	2	002,0	1
21952-040011**	**21952-04001**2**	4	004,0	1
21952-050011**	**21952-05001**2**	5	005,0	1
21952-100011**	**21952-10001**2**	10	010,0	1

Position indicators for handwheels

analogue-digital display

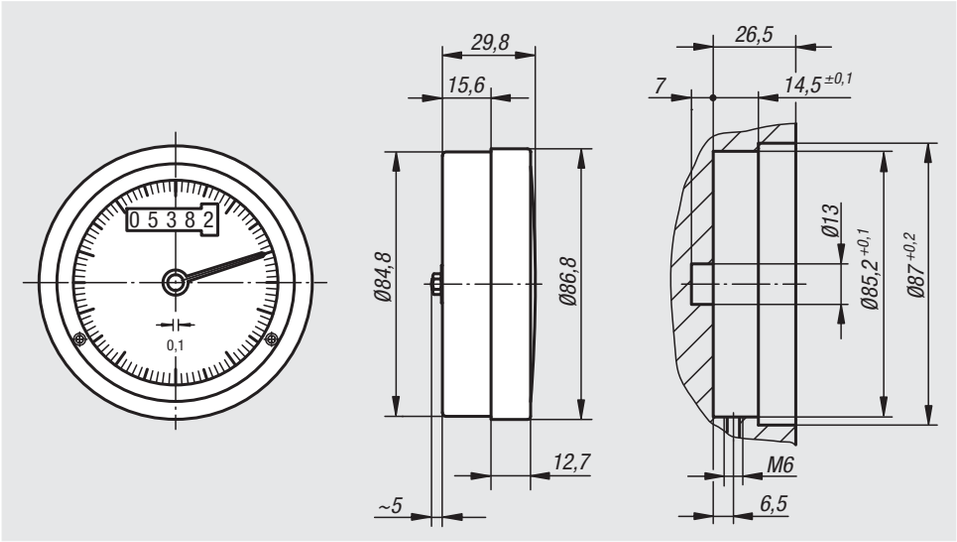

Material:
Housing, screen plastic.

Version:
Housing black, fibreglass reinforced.
Screen dustproof.

Sample order:
nlm 21962-800201

Note:
Position indicators are provided for installation in handwheels. They allow direct readout of set measurement values such as lengths, flow rates, speeds, etc, at a glance.
The measurement values are acquired according to the gravity principle. Conceived for use on horizontal spindles.

One revolution of the black pointer corresponds to one spindle rotation. In combination with the 5-place digital display, a very precise and easy read out of the position is thus obtained

On request:
Other pitches

Accessories:
– Handwheels 21972

Order No.	Size	Pitch	Indicator after one rotation	Suitable for
21962-800201	80	2	00002	handwheel size 80
21962-800301	80	3	00003	handwheel size 80
21962-800401	80	4	00004	handwheel size 80
21962-800501	80	5	00005	handwheel size 80
21962-801001	80	10	00010	handwheel size 80

Handwheels for position indicators

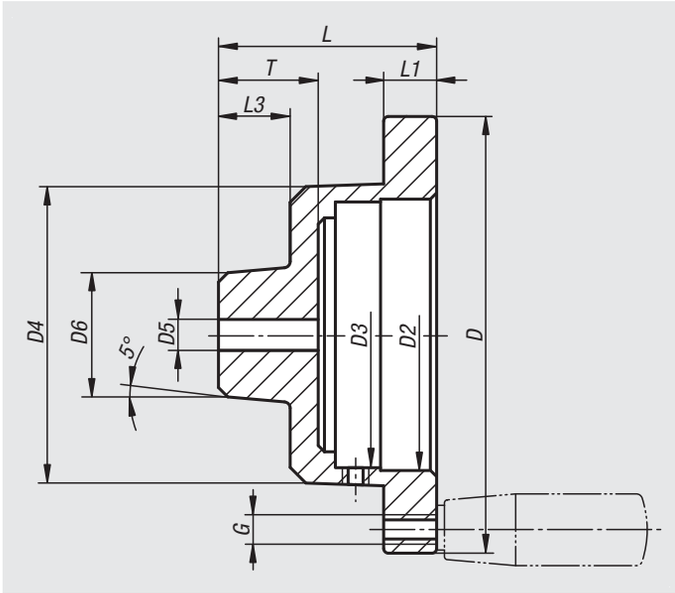

Material:
Cast aluminium.

Version:
Bright.

Sample order:
nlm 21972-801201

Note:
The handwheels have a recess for receiving position indicators.

Accessories:
– Position Indicators 21962
– Handles 06290 – 06320

Order No.	Size	D	D2	D3	D4	D5 predrilled	D6	G	L	L1	L3	T	Suitable for
21972-801201	80	120	87	85,2	95	6,8	40	M6	64	15	23	30	position indicator size 80
21972-801401	80	140	87	85,2	95	6,8	40	M8	70	17	23	30	position indicator size 80

Notes

22000

Drive technology

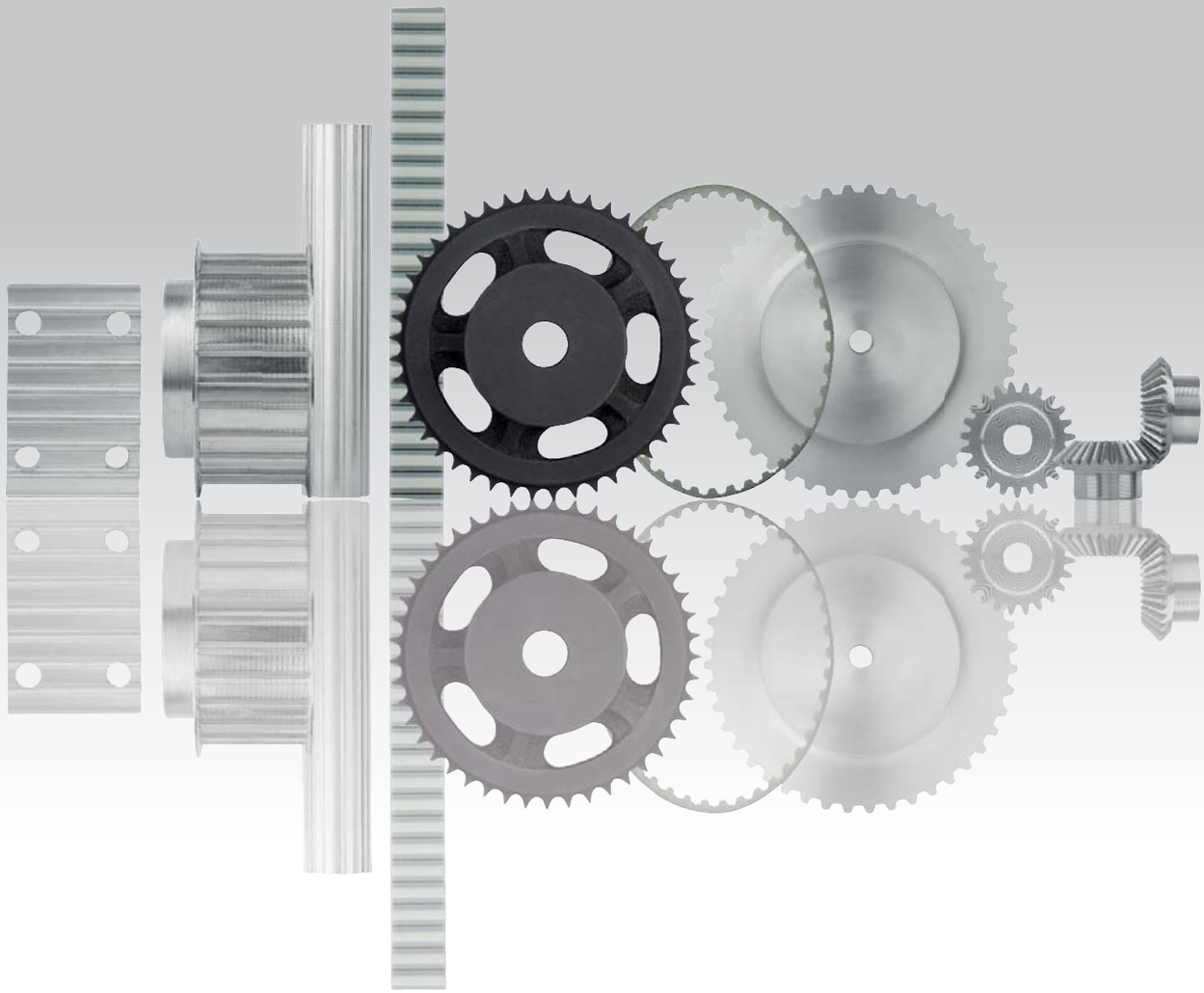

Technical Information
for toothed belts 22052, 22054, 22057 and 22059

General
Our toothed belts are made of abrasion-resistant polyurethane and reinforced with high-tensile steel cording. They allow for a smooth and synchronous transmission of power. They are maintenance-free and extremely cost-efficient.

Drive installation
Diagrams and performance tables are available on these pages for selecting the size. The axles must be parallel to one another. It is possible to align the toothed pulleys very precisely using a straight edge or laser. Use the largest possible toothed pulleys. Make sure that at least one toothed pulley has rim flanges. When installing the toothed belts, never forcefully lever over the rim flange. Adjustment possibilities should be pre-planned for mounting and setting the correct belt tension.

Belt tension
In order to guarantee a long service life and low-noise operation, correct alignment and tensioning of the drive are absolutely necessary. Idlers are often used on drives with fixed centre distances in order to be able to set the the belt tension accurately. A smooth roller is the preferred idler to use on the slack side of the belt. Smooth idlers produce counter-flection which reduces the service life of the drive. If it is not possible to do without them, the idler should be at least 1.25 times as large as the drive‘s smallest toothed pulley and fitted as close as possible to the small pulley in order to maximise the number of teeth in mesh.

Belt storage
Never bend the toothed belt. When storing, prevent bending, direct solar radiation and chemical influences.

Minimum number of teeth and minimum diameter

	Profile		T5	T10	AT5	AT10
without counterflection 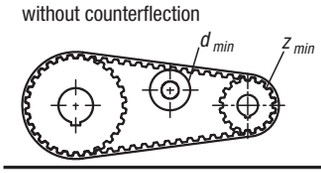	Synchronising wheel	z_{min}	10	12	15	15
	Inner idler on teeth	d_{min} [mm]	30	60	30	50
with counterflection 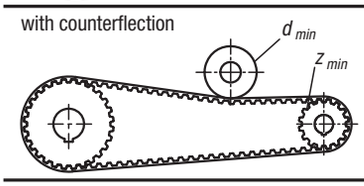	Synchronising wheel	z_{min}	15	20	25	25
	Outer idler on belt back	d_{min} [mm]	30	60	60	120

Technical information for toothed belts 22052 and 22057

Specific tooth force

Output “P” and torque “M” to be transferred via the belt are calculated using the following formulas:

P	=	Power [kW]
M	=	Torque [Nm]
P_{spez}	=	Specific power
M_{spez}	=	Specific torque
z_e	=	Engaging teeth of small gear wheel
z_{emax}	=	12 for calculating max. permissible engaging teeth
z_k	=	Nr. of teeth of small gear wheel
b	=	Belt width [cm]
A	=	Centre distance [mm]

$P\ [kW] = P_{spez}$

$[Nm] = M_{spez}$

Pitch T 5

Speed [min^{-1}]	M_{spez} [Ncm/cm]	P_{spez} [W/cm]	Speed [min^{-1}]	M_{spez} [Ncm/cm]	P_{spez} [W/cm]	Speed [min^{-1}]	M_{spez} [Ncm/cm]	P_{spez} [W/cm]
0	2,523	0,000	**1200**	1,607	2,019	**3400**	1,248	4,444
20	2,458	0,051	**1300**	1,580	2,151	**3600**	1,229	4,632
40	2,403	0,101	**1400**	1,555	2,279	**3800**	1,209	4,812
60	2,354	0,148	**1440**	1,545	2,330	**4000**	1,191	4,988
80	2,312	0,194	**1500**	1,532	2,406	**4500**	1,149	5,414
100	2,276	0,238	**1600**	1,510	2,529	**5000**	1,111	5,818
200	2,135	0,447	**1700**	1,489	2,651	**5500**	1,078	6,206
300	2,032	0,638	**1800**	1,470	2,770	**6000**	1,046	6,571
400	1,951	0,817	**1900**	1,451	2,888	**6500**	1,017	6,924
500	1,884	0,987	**2000**	1,433	3,001	**7000**	0,991	7,262
600	1,829	1,149	**2200**	1,400	3,226	**7500**	0,966	7,588
700	1,781	1,306	**2400**	1,371	3,445	**8000**	0,943	7,897
800	1,738	1,456	**2600**	1,342	3,654	**8500**	0,920	8,191
900	1,701	1,603	**2800**	1,317	3,860	**9000**	0,900	8,480
1000	1,667	1,745	**3000**	1,306	3,940	**9500**	0,880	8,758
1100	1,635	1,884	**3200**	1,292	4,059	**10000**	0,862	9,027

Pitch T 10

Speed [min^{-1}]	M_{spez} [Ncm/cm]	P_{spez} [W/cm]	Speed [min^{-1}]	M_{spez} [Ncm/cm]	P_{spez} [W/cm]	Speed [min^{-1}]	M_{spez} [Ncm/cm]	P_{spez} [W/cm]
0	8,244	0,000	**1200**	4,808	6,042	**3400**	3,460	12,318
20	8,009	0,168	**1300**	4,708	6,409	**3600**	3,385	12,761
40	7,805	0,327	**1400**	4,614	6,764	**3800**	3,312	13,179
60	7,627	0,479	**1440**	4,577	6,902	**4000**	3,245	13,592
80	7,472	0,626	**1500**	4,526	7,109	**4500**	3,088	14,549
100	7,339	0,768	**1600**	4,444	7,445	**5000**	2,946	15,424
200	6,804	1,425	**1700**	4,366	7,771	**5500**	2,817	16,224
300	6,411	2,014	**1800**	4,292	8,090	**6000**	2,701	16,969
400	6,105	2,557	**1900**	4,222	8,401	**6500**	2,593	17,646
500	5,857	3,066	**2000**	4,157	8,706	**7000**	2,492	18,269
600	5,648	3,549	**2200**	4,033	9,291	**7500**	2,398	18,836
700	5,467	4,007	**2400**	3,920	9,851	**8000**	2,311	19,359
800	5,306	4,445	**2600**	3,815	10,386	**8500**	2,228	19,832
900	5,163	4,866	**2800**	3,718	10,901	**9000**	2,150	20,264
1000	5,034	5,271	**3000**	3,680	11,097	**9500**	2,077	20,661
1100	4,916	5,663	**3200**	3,626	11,389	**10000**	2,007	21,015

Pitch AT 5

Speed [min^{-1}]	M_{spez} [Ncm/cm]	P_{spez} [W/cm]	Speed [min^{-1}]	M_{spez} [Ncm/cm]	P_{spez} [W/cm]	Speed [min^{-1}]	M_{spez} [Ncm/cm]	P_{spez} [W/cm]
0	3,813	0,000	**1200**	2,668	3,352	**3400**	1,993	7,096
20	3,758	0,079	**1300**	2,620	3,566	**3600**	1,954	7,368
40	3,708	0,155	**1400**	2,574	3,773	**3800**	1,917	7,627
60	3,663	0,230	**1440**	2,557	3,855	**4000**	1,881	7,879
80	3,623	0,304	**1500**	2,531	3,975	**4500**	1,799	8,479
100	3,586	0,376	**1600**	2,491	4,173	**5000**	1,725	9,032
200	3,448	0,722	**1700**	2,452	4,365	**5500**	1,658	9,549
300	3,343	1,050	**1800**	2,416	4,554	**6000**	1,596	10,029
400	3,235	1,355	**1900**	2,381	4,737	**6500**	1,539	10,473
500	3,137	1,642	**2000**	2,348	4,918	**7000**	1,485	10,887
600	3,050	1,916	**2200**	2,285	5,265	**7500**	1,436	11,278
700	2,972	2,178	**2400**	2,229	5,601	**8000**	1,389	11,635
800	2,900	2,430	**2600**	2,175	5,923	**8500**	1,346	11,980
900	2,834	2,671	**2800**	2,125	6,231	**9000**	1,304	12,289
1000	2,775	2,905	**3000**	2,106	6,352	**9500**	1,264	12,576
1100	2,719	3,132	**3200**	2,079	6,531	**10000**	1,228	12,854

Pitch AT 10

Speed [min^{-1}]	M_{spez} [Ncm/cm]	P_{spez} [W/cm]	Speed [min^{-1}]	M_{spez} [Ncm/cm]	P_{spez} [W/cm]	Speed [min^{-1}]	M_{spez} [Ncm/cm]	P_{spez} [W/cm]
0	15,903	0,000	**1200**	10,174	12,785	**3400**	7,019	24,898
20	15,670	0,328	**1300**	9,945	13,538	**3600**	6,838	25,778
40	15,452	0,647	**1400**	9,731	14,266	**3800**	6,664	26,516
60	15,246	0,958	**1440**	9,649	14,550	**4000**	6,500	27,225
80	15,053	1,261	**1500**	9,529	14,968	**4500**	6,120	28,837
100	14,870	1,557	**1600**	9,340	15,649	**5000**	5,777	30,248
200	14,103	2,954	**1700**	9,160	16,305	**5500**	5,464	31,470
300	13,483	4,236	**1800**	8,990	16,944	**6000**	5,179	32,536
400	12,927	5,414	**1900**	8,828	17,563	**6500**	4,916	33,460
500	12,439	6,513	**2000**	8,672	18,162	**7000**	4,670	34,232
600	12,008	7,545	**2200**	8,380	19,305	**7500**	4,441	34,878
700	11,626	8,522	**2400**	8,113	20,390	**8000**	4,227	35,409
800	11,282	9,451	**2600**	7,866	21,414	**8500**	4,023	35,808
900	10,969	10,337	**2800**	7,632	22,378	**9000**	3,832	36,113
1000	10,683	11,186	**3000**	7,544	22,751	**9500**	3,651	36,322
1100	10,418	12,000	**3200**	7,416	23,296	**10000**	3,479	36,429

Technical information for toothed belts 22052 and 22057

b	(cm)	Belt width
L_R	(mm)	Belt length
z_R	-	Number of belt teeth
B	(mm)	Pulley width
A	(mm)	Centre distance
A_{eff}	(mm)	Effective centre distance
d	(mm)	Diameter of bore
d_a	(mm)	Outer diameter
d_{ak}	(mm)	Outer diameter of small pulley
d_{ag}	(mm)	Outer diameter of large pulley
d_w	(mm)	Effective diameter
d_{wk}	(mm)	Effective diameter of small pulley
d_{wg}	(mm)	Effective diameter of large pulley
F_{Wsta}	(N)	Static shaft power
F_{TV}	(N)	Pre-tensioning force per belt
F_{Tzul}	(N)	Maximum permissible belt tension
F_U	(N)	Peripheral force
M	(Nm)	Torque
P	(kW)	Output
t_{ab}	(s)	Acceleration time
t_{av}	(s)	Deceleration time
v	(m/s)	Speed / peripheral speed
z_e	-	Number of teeth in mesh
z_k	-	Number of teeth on small pulley
z_g	-	Number of teeth on large pulley
i	-	Speed ratio n1 : n2
ρ	(kg/dm3)	Density
J	(kgm 2)	Mass moment of inertia
t	(mm)	Pitch
n	(min-1)	Speed
n_1	(min-1)	Drive pulley speed
ω	(s -1)	Angular speed
β	(°)	Wrap angle

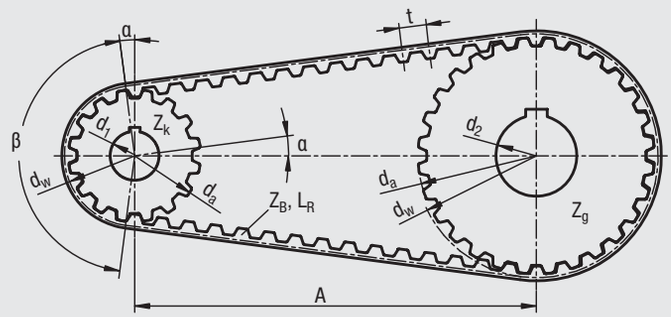

Formula's

Power

$$P = \frac{M \cdot n}{9550}$$

$$P = \frac{F_u \cdot d_w \cdot n}{19100 \cdot 10^3}$$

Circumferential force

$$F_u = \frac{19100 \cdot P \cdot 10^3}{n \cdot d_w}$$

$$F_u = \frac{2000 \cdot M}{d_w}$$

Torque

$$M = \frac{F_u \cdot d_w}{2000}$$

$$M = \frac{9550 \cdot P}{n}$$

Angular velocity

$$\omega = \frac{\pi \cdot n}{30}$$

Circumferential speed

$$v = \frac{d_w \cdot n}{19100}$$

Acceleration torque

$$M_{ab} = \frac{J \cdot \Delta n}{9{,}55 \cdot t_{ab}}$$

Moment of inertia

$$J = 98{,}2 \cdot 10^{-15} \cdot B \cdot \rho \cdot (d_a^4 - d^4)$$

Speed

$$n = \frac{19100 \cdot v}{d_w}$$

Effective diameter

$$d_w = \frac{z \cdot t}{\pi}$$

Belt length for i=1

$$L_R = 2 \cdot A + \pi \cdot d_w$$

$$L_R = 2 \cdot A + z \cdot t$$

Belt length for i ≠ 1
(simplified)

$$L_R \approx \frac{t}{2} \cdot (z_g + z_k) + 2A + \frac{1}{4A} \cdot \left[\frac{(z_g - z_k) \cdot t}{\pi}\right]^2$$

Belt length for i ≠ 1
(for greater accuracy)

$$L_R \approx 2A \cdot \sin \cdot \frac{\beta}{2} + \frac{t}{2} \cdot \left[z_g + z_k + \left(1 - \frac{\beta}{180}\right) \cdot (z_g - z_k)\right]$$

Selection diagram

The selection diagrams enables the selection of the belt profile for the drive task in advance.
The application c safety factors and the speed of the small pulley must be taken into account.

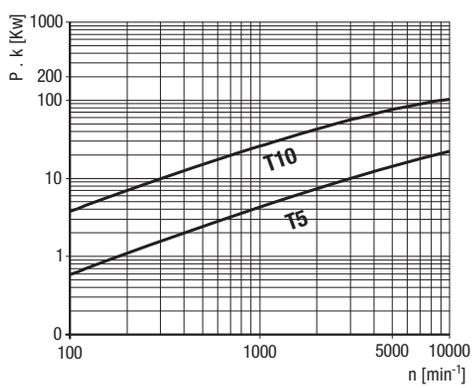

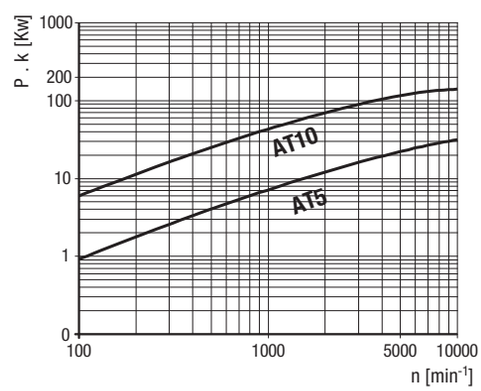

Technical information for toothed belts 22052 and 22057

Drive calculation

The following data are required for the calculation:

- drive output to be transferred = P [kW]
- drive speed = n_1 [min-1]
- motor starting torque = M_{ab} [Nm]
- centre distance required = A [mm]
- max. permissible drive pulley diameter = d_{w1} [mm]

Safety factor

Belts are selected for uniform loads. A c1 safety factor must be anticipated for peak and dynamic loads.

drive with uniform load c1 = 1.0

drive with peak or dynamic load:

light c1	=	1.4
medium c1	=	1.7
heavy c1	=	2.0

For speed step-up ratios a c2 acceleration factor must be anticipated:

i = from 0.66 to 1.0 c2	= 1.1
i = from 0.40 to 0.66 c2	= 1.2
i < 0.40 c2	= 1.3

The overall service factor is:

$c_0 = c_1 \times c_2$

Belt and washer selection

Use the selection diagram for belt pre-selection. Selecting the largest permissible pulley is recommended.

Calculating speed ratio i

$$i = \frac{n_1}{n_2}$$

Calculating the number of teeth in mesh

$$z_e = \frac{\beta}{360} \cdot z_K$$

with β [°] = wrap angle

$$\beta = 2 \cdot \arccos \cdot \left[\frac{t \cdot (z_g - z_k)}{2 \cdot \pi \cdot A} \right]$$

Determining the belt width

$$b = \frac{P \cdot 1000 \cdot c_0}{z_k \cdot z_e \cdot P_{spez}} \qquad b = \frac{100 \cdot M \cdot c_0}{z_k \cdot z_e \cdot M_{spez}}$$

Checking the permissible belt tension

The permissible belt tension must be greater than the maximum peripheral force anticipated.

$$F_{Tzul} > c_0 \cdot F_U \quad \text{with} \quad F_U = \frac{2000 \cdot M}{d_w}$$

Static shaft power

FWsta = 2 x FTV x cos x β

FWsta = 2 x FTV (for i = 1)

Determining the tension

The belt is tensioned correctly if the slack side remains tensioned under every operating condition that occurs. More than the required tension should be avoided so that the lowest load possible on the shaft is achieved. The correct belt tension also depends on the belt length LR (number of belt teeth zR).

The following tension forces per side are recommended:

2 shaft drives:

$z_R < 75$	$F_{TV} = 1/3\ F_U$
$75 < z_R < 150$	$F_{TV} = 1/2\ F_U$
$z_R > 150$	$F_{TV} = 2/3\ F_U$
Multi-shaft drives:	$F_{TV} > F_U$

Use of an applicable measurement device is recommended to set the tension correctly.

Calculation example

- motor output to be transferred	10 kW
- drive speed n1	2600 1/min
- drive speed n2	2600 1/min
- motor starting torque	50 Nm
- centre distance required A	400 mm
- max. permissible drive pulley diameter dw	130 mm
- safety factor c1	1.4

Calculating the speed ratio

$$\frac{n_1}{n_2} = 1$$

Belt selection:

Belt pitch T10 is selected from the selection diagram taking into account safety factor 1.4 for calculated output PB of 14 kW corrected as a result.

Calculating the number of washer teeth z:

The number of teeth is calculated from the maximum permissible pulley diameter and the selected belt pitch T10. On the basis of speed ratio i = 1, driving and driven pulley are the same size.

$$z = \frac{130 \cdot \pi}{10} = 40.84 \text{ - selected } z = 40 \text{ with } d_w = 127.32 \text{ mm.}$$

The maximum permissible diameter was selected in order to minimise the belt width.

$z_1 = 40$, $z_2 = 40$

Calculating the belt length

$L_R = 2 \cdot A + \pi \cdot d \cdot w = 2 \cdot A + z \cdot t$

$L_R = 2 \cdot 400 + 40 \cdot 10 = 1200$ mm

Number of teeth in mesh

When i = 1 the number of teeth in mesh on both pulleys is z e = 20.

Determining belt width b:

$$b = \frac{1000 \cdot 10 \cdot 1{,}4}{40 \cdot 12 \cdot 10{,}386} = 2{,}81 \text{ cm} = 28{,}1 \text{ mm}$$

The next largest standard belt width of 32 mm is selected. The belt width selected is checked based on the motor starting torque for speed n = 0.

$$b = \frac{100 \cdot 50}{40 \cdot 12 \cdot 3{,}815} = 2{,}73 \text{ cm} = 27{,}3 \text{ mm}$$

The next largest standard width of 32 mm is selected.

Checking the permissable belt tension FTzul:

$$F_U = \frac{2000 \cdot 50}{127{,}32} = 785{,}4 \text{ N}$$

Tensioning force via No. of belt teeth

$$Z_R = \frac{1200}{10} = 120 \text{ teeth}$$

Belt tensioning force FTV per side is:

$$F_{TV} = \frac{1}{2} \cdot F_U = 392{,}7 \text{ N with } z_R = 120$$

Flexibility:

The requisite minimum diameters are maintained.

Belt selected:

32 T10 - 1200

Toothed belt pulleys

T profile

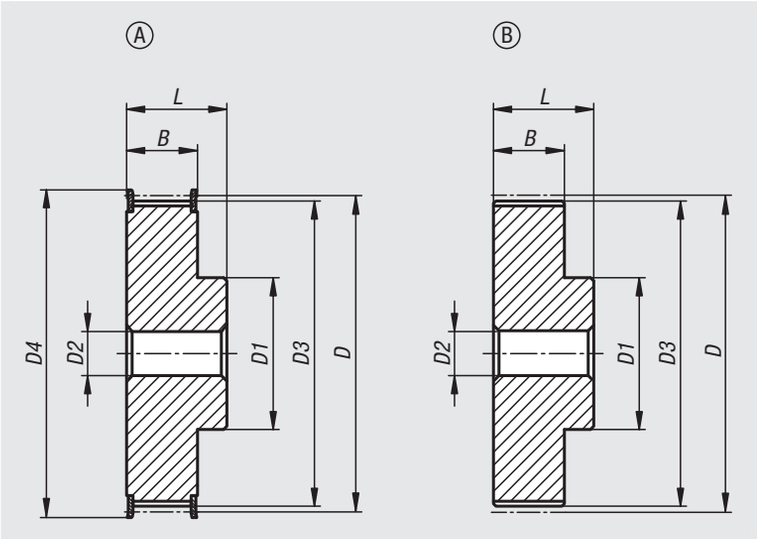

Material:
Aluminium.
Rim flanges, steel.

Version:
Aluminium bright.
Steel galvanized.

Sample order:
nlm 22002-051010

Note:
Standard T-profile to DIN 7721 T2 with metric pitch (trapezoidal toothing). At least one toothed belt pulley must have rim flanges. The toothed belt pulleys have a centre or pilot hole.

Toothed belt pulleys, T5 profile

Order No. for belt width 10 mm	Order No. for belt width 16 mm	Order No. for belt width 25 mm	Form	No. of teeth	D	D1	D2 max.	D3	D4	B	L
22002-051010	22002-051610	22002-052510	A	10	15,92	8	5	15,05	19,5	15/21/30	21/27/36
22002-051012	22002-051612	22002-052512	A	12	19,01	10	6	18,25	23	15/21/30	21/27/36
22002-051014	22002-051614	22002-052514	A	14	22,29	13	8	21,45	25	15/21/30	21/27/36
22002-051015	22002-051615	22002-052515	A	15	23,88	16	10	23,05	28	15/21/30	21/27/36
22002-051016	22002-051616	22002-052516	A	16	25,47	18	11	24,6	32	15/21/30	21/27/36
22002-051018	22002-051618	22002-052518	A	18	28,65	20	12	27,8	30	15/21/30	21/27/36
22002-051019	22002-051619	22002-052519	A	19	30,25	22	12	29,4	36	15/21/30	21/27/36
22002-051020	22002-051620	22002-052520	A	20	31,83	23	14	31	36	15/21/30	21/27/36
22002-051022	22002-051622	22002-052522	A	22	35,12	24	15	34,25	38	15/21/30	21/27/36
22002-051024	22002-051624	22002-052524	A	24	38,21	26	15	37,4	42	15/21/30	21/27/36
22002-051025	22002-051625	22002-052525	A	25	39,8	26	15	39	44	15/21/30	21/27/36
22002-051026	22002-051626	22002-052526	A	26	41,47	26	16	40,6	44	15/21/30	21/27/36
22002-051027	22002-051627	22002-052527	A	27	42,98	30	18	42,2	48	15/21/30	21/27/36
22002-051028	22002-051628	22002-052528	A	28	44,62	32	18	43,75	48	15/21/30	21/27/36
22002-051030	22002-051630	22002-052530	A	30	47,76	34	18	46,95	51	15/21/30	21/27/36
22002-051032	22002-051632	22002-052532	A	32	50,94	38	22	50,1	54	15/21/30	21/27/36
22002-051036	22002-051636	22002-052536	A	36	57,31	38	22	56,45	63	15/21/30	21/27/36
22002-051040	22002-051640	22002-052540	A	40	63,66	40	23	62,85	66	15/21/30	21/27/36
22002-051042	22002-051642	22002-052542	A	42	66,87	40	24	66	71	15/21/30	21/27/36
22002-051044	22002-051644	22002-052544	B	44	70,07	45	26	69,2	-	15/21/30	21/27/36
22002-051048	22002-051648	22002-052548	B	48	76,42	50	28	75,55	-	15/21/30	21/27/36
22002-051060	22002-051660	22002-052560	B	60	95,52	65	35	94,65	-	15/21/30	21/27/36

Toothed belt pulleys

T profile

Toothed belt pulleys, T10 profile

Order No. for belt width 16 mm	Order No. for belt width 25 mm	Order No. for belt width 32 mm	Form	No. of teeth	D	D1	D2 max.	D3	D4	B	L
22002-101612	22002-102512	-	A	12	38,2	28	16	36,35	42	21/30	31/40
22002-101614	22002-102514	-	A	14	44,56	32	18	42,7	48	21/30	31/40
22002-101615	22002-102515	-	A	15	47,75	32	18	45,9	51	21/30	31/40
22002-101616	22002-102516	-	A	16	50,93	35	20	49,05	54	21/30	31/40
22002-101618	22002-102518	22002-103218	A	18	57,29	40	22	55,45	60	21/30/37	31/40/47
22002-101619	22002-102519	22002-103219	A	19	60,48	44	22	58,6	66	21/30/37	31/40/47
22002-101620	22002-102520	22002-103220	A	20	63,66	46	24	61,8	66	21/30/37	31/40/47
22002-101622	22002-102522	22002-103222	A	22	70,03	52	28	68,15	75	21/30/37	31/40/47
22002-101624	22002-102524	22002-103224	A	24	76,39	58	30	74,55	83	21/30/37	31/40/47
22002-101625	22002-102525	22002-103225	A	25	79,58	60	30	77,7	83	21/30/37	31/40/47
22002-101626	22002-102526	22002-103226	A	26	82,76	60	30	80,9	87	21/30/37	31/40/47
22002-101627	22002-102527	22002-103227	A	27	85,95	60	30	84,1	91	21/30/37	31/40/47
22002-101628	22002-102528	22002-103228	A	28	89,13	60	30	87,25	93	21/30/37	31/40/47
22002-101630	22002-102530	22002-103230	A	30	95,49	60	30	93,65	97	21/30/37	31/40/47
22002-101632	22002-102532	22002-103232	A	32	101,86	65	32	100	106	21/30/37	31/40/47
22002-101636	22002-102536	22002-103236	A	36	114,59	70	35	112,75	119	21/30/37	31/40/47
22002-101640	22002-102540	22002-103240	A	40	127,32	80	40	125,45	131	21/30/37	31/40/47
22002-101644	22002-102544	22002-103244	B	44	140,06	88	46	138,2	-	21/30/37	31/40/47
22002-101648	22002-102548	22002-103248	B	48	152,78	95	48	150,95	-	21/30/37	31/40/47
22002-101660	22002-102560	22002-103260	B	60	190,98	110	60	189,1	-	21/30/37	31/40/47

Toothed belt pulleys

AT profile

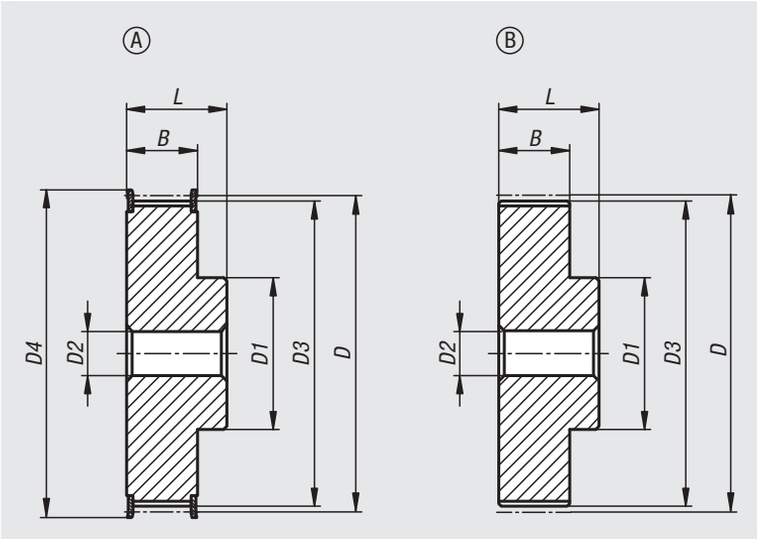

Material:
Aluminium.
Rim flanges, steel.

Version:
Aluminium bright.
Steel galvanized.

Sample order:
nlm 22003-051012

Note:
Standard AT-profile with metric pitch (trapezoidal toothing). At least one toothed belt pulley must have rim flanges. The toothed belt pulleys have a centre or pilot hole.

Toothed belt pulleys, AT5 profile

Order No. for belt width 10 mm	Order No. for belt width 16 mm	Order No. for belt width 25 mm	Form	No. of teeth	D	D1	D2 max.	D3	D4	B	L
22003-051012	22003-051612	22003-052512	A	12	19,01	10	6	17,85	23	15/21/30	21/27/36
22003-051014	22003-051614	22003-052514	A	14	22,29	13	8	21,05	25	15/21/30	21/27/36
22003-051015	22003-051615	22003-052515	A	15	23,88	16	10	22,65	28	15/21/30	21/27/36
22003-051016	22003-051616	22003-052516	A	16	25,47	18	11	24,2	32	15/21/30	21/27/36
22003-051018	22003-051618	22003-052518	A	18	28,65	20	12	27,4	32	15/21/30	21/27/36
22003-051019	22003-051619	22003-052519	A	19	30,25	22	12	29	36	15/21/30	21/27/36
22003-051020	22003-051620	22003-052520	A	20	31,83	23	14	30,6	36	15/21/30	21/27/36
22003-051022	22003-051622	22003-052522	A	22	35,12	24	15	33,85	38	15/21/30	21/27/36
22003-051024	22003-051624	22003-052524	A	24	38,21	26	15	37	42	15/21/30	21/27/36
22003-051025	22003-051625	22003-052525	A	25	39,8	26	15	38,6	44	15/21/30	21/27/36
22003-051026	22003-051626	22003-052526	A	26	41,47	26	16	40,2	44	15/21/30	21/27/36
22003-051027	22003-051627	22003-052527	A	27	42,98	30	18	41,8	48	15/21/30	21/27/36
22003-051028	22003-051628	22003-052528	A	28	44,62	32	18	43,35	48	15/21/30	21/27/36
22003-051030	22003-051630	22003-052530	A	30	47,76	34	18	46,55	51	15/21/30	21/27/36
22003-051032	22003-051632	22003-052532	A	32	50,94	38	22	49,7	54	15/21/30	21/27/36
22003-051036	22003-051636	22003-052536	A	36	57,31	38	22	56,05	63	15/21/30	21/27/36
22003-051040	22003-051640	22003-052540	A	40	63,66	40	23	62,45	66	15/21/30	21/27/36
22003-051042	22003-051642	22003-052542	A	42	66,87	40	24	65,6	71	15/21/30	21/27/36
22003-051044	22003-051644	22003-052544	B	44	70,07	45	26	68,8	-	15/21/30	21/27/36
22003-051048	22003-051648	22003-052548	B	48	76,42	50	28	75,15	-	15/21/30	21/27/36
22003-051060	22003-051660	22003-052560	B	60	95,52	65	35	94,25	-	15/21/30	21/27/36

Toothed belt pulleys

AT profile

Toothed belt pulleys, AT10 profile

Order No. for belt width 16 mm	Order No. for belt width 25 mm	Order No. for belt width 32 mm	Form	No. of teeth	D	D1	D2 max.	D3	D4	B	L
22003-101615	22003-102515	-	A	15	47,75	32	18	45,9	51	21/30	31/40
22003-101616	22003-102516	-	A	16	50,93	35	20	49,05	54	21/30	31/40
22003-101618	22003-102518	22003-103218	A	18	57,29	40	22	55,45	60	21/30/37	31/40/47
22003-101619	22003-102519	22003-103219	A	19	60,48	44	22	58,6	66	21/30/37	31/40/47
22003-101620	22003-102520	22003-103220	A	20	63,66	46	24	61,8	66	21/30/37	31/40/47
22003-101622	22003-102522	22003-103222	A	22	70,03	52	28	68,15	75	21/30/37	31/40/47
22003-101624	22003-102524	22003-103224	A	24	76,39	58	30	74,55	83	21/30/37	31/40/47
22003-101625	22003-102525	22003-103225	A	25	79,58	60	30	77,7	83	21/30/37	31/40/47
22003-101626	22003-102526	22003-103226	A	26	82,76	60	30	80,9	87	21/30/37	31/40/47
22003-101627	22003-102527	22003-103227	A	27	85,95	60	30	84,1	91	21/30/37	31/40/47
22003-101628	22003-102528	22003-103228	A	28	89,13	60	30	87,25	93	21/30/37	31/40/47
22003-101630	22003-102530	22003-103230	A	30	95,49	60	30	93,65	97	21/30/37	31/40/47
22003-101632	22003-102532	22003-103232	A	32	101,86	65	32	100	106	21/30/37	31/40/47
22003-101636	22003-102536	22003-103236	A	36	114,59	70	35	112,75	119	21/30/37	31/40/47
22003-101640	22003-102540	22003-103240	A	40	127,32	80	40	125,45	131	21/30/37	31/40/47
22003-101644	22003-102544	22003-103244	B	44	140,06	88	46	138,2	-	21/30/37	31/40/47
22003-101648	22003-102548	22003-103248	B	48	152,78	95	48	150,95	-	21/30/37	31/40/47
22003-101660	22003-102560	22003-103260	B	60	190,98	110	60	189,1	-	21/30/37	31/40/47

Toothed pulleys

profile HTD 5M

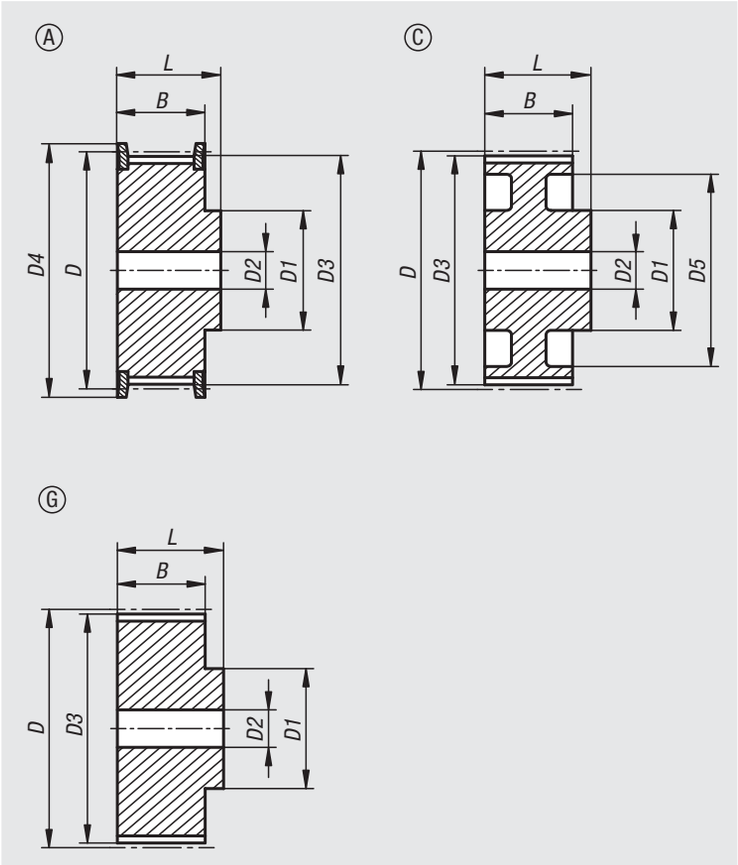

Material:
Steel.
Toothed pulleys without aluminium rim flanges.

Version:
Steel phosphated.
Aluminium bright.

Sample order:
nlm 22004-051512

Note:
Standard HTD profile with metric graduation (rounded toothing). At least one toothed belt pulley must have a rim flange. The toothed belt pulleys are centre bored or pre-drilled.

Order No. for belt width 15 mm	Order No. for belt width 25 mm	Form	Main material	No. of teeth	D	D1 max.	D2 max.	D3	D4 max.	D5	B	L
22004-051512	**22004-052512**	A	steel	12	19,1	13	6	17,96	23	-	20,5/30	26/36
22004-051514	**22004-052514**	A	steel	14	22,28	14	6	21,14	25	-	20,5/30	26/36
22004-051515	**22004-052515**	A	steel	15	23,87	16	6	22,73	28	-	20,5/30	26/36
22004-051516	**22004-052516**	A	steel	16	25,47	16,5	6	24,32	28	-	20,5/30	26/36
22004-051518	**22004-052518**	A	steel	18	28,65	20	6	27,51	32	-	20,5/30	26/36
22004-051520	**22004-052520**	A	steel	20	31,83	23	6	30,69	36	-	20,5/30	26/36
22004-051521	**22004-052521**	A	steel	21	33,42	24	6	32,28	38	-	20,5/30	26/38
22004-051522	**22004-052522**	A	steel	22	35,01	25,5	6	33,87	39	-	20,5/30	26/38
22004-051524	**22004-052524**	A	steel	24	38,19	27	6	37,06	42	-	20,5/30	28/38
22004-051526	**22004-052526**	A	steel	26	41,38	30	6	40,24	46	-	20,5/30	28/38
22004-051528	**22004-052528**	A	steel	28	44,56	30,5	6	43,42	50	-	20,5/30	28/38
22004-051530	**22004-052530**	A	steel	30	47,75	35	8	46,61	51	-	20,5/30	28/38
22004-051532	**22004-052532**	A	steel	32	50,93	38	8	49,79	55	-	20,5/30	28/38
22004-051536	**22004-052536**	A	steel	36	57,3	38	8	56,16	62	-	20,5/30	28/38
22004-051540	**22004-052540**	A	steel	40	63,66	38	8	62,52	71	-	20,5/30	28/38
22004-051544	**22004-052544**	G	aluminium	44	70,03	38	8	68,89	-	-	20,5/30	30/40
22004-051548	**22004-052548**	G	aluminium	48	76,39	45	8	75,25	-	-	20,5/30	30/40
22004-051560	**22004-052560**	G	aluminium	60	95,49	50	8	94,35	-	-	20,5/30	30/40
22004-051572	**22004-052572**	C	aluminium	72	114,59	50	8	113,45	-	90	20,5/30	30/40

Toothed pulleys

profile HTD 8M

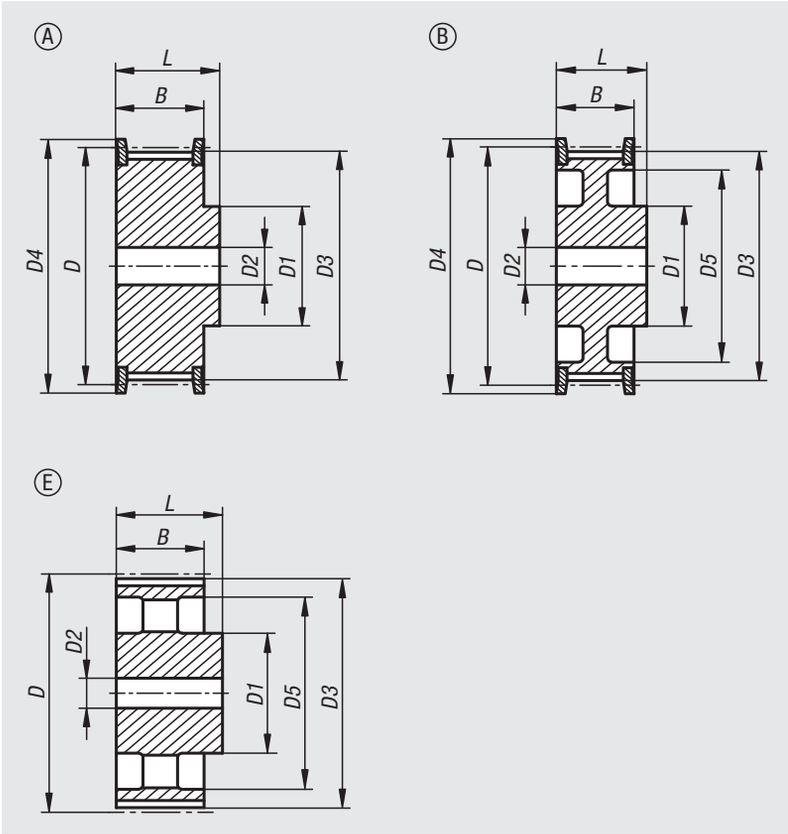

Material:
Steel or grey cast iron.

Version:
Phosphated

Sample order:
nlm 22004-0820018

Note:
Standard HTD profile with metric graduation (rounded toothing). At least one toothed belt pulley must have a rim flange. The toothed belt pulleys are centre bored or pre-drilled.

Order No.	Version	Form	Material	No. of teeth	D	D1 max.	D2 max.	D3	D4 max.	D5	B	L
22004-0820018	for belt width 20 mm	A	steel	18	45,84	32	12	44,46	51	-	28	38
22004-0820020	for belt width 20 mm	A	steel	20	50,93	36	12	49,56	57	-	28	38
22004-0820022	for belt width 20 mm	A	steel	22	56,02	43	12	54,65	62	-	28	38
22004-0820024	for belt width 20 mm	A	steel	24	61,12	49	12	59,74	67	-	28	38
22004-0820026	for belt width 20 mm	A	steel	26	66,21	50	12	64,84	73	-	28	38
22004-0820028	for belt width 20 mm	A	steel	28	71,3	55	14	69,93	77	-	28	38
22004-0820030	for belt width 20 mm	A	steel	30	76,39	60	14	75,02	84	-	28	38
22004-0820032	for belt width 20 mm	A	steel	32	81,49	64	14	80,12	88	-	28	38
22004-0820034	for belt width 20 mm	A	steel	34	86,58	70	14	85,21	94	-	28	38
22004-0820036	for belt width 20 mm	A	steel	36	91,67	75	14	90,3	98	-	28	38
22004-0820038	for belt width 20 mm	A	steel	38	96,77	80	14	95,39	104	-	28	38
22004-0820040	for belt width 20 mm	A	steel	40	101,86	85	14	100,49	108	-	28	38
22004-0820044	for belt width 20 mm	A	grey cast iron	44	112,05	96	14	110,67	121	-	28	38
22004-0820048	for belt width 20 mm	A	grey cast iron	48	122,23	104	14	120,86	129	-	28	38
22004-0820056	for belt width 20 mm	B	grey cast iron	56	142,6	80	14	141,23	150	117	28	38
22004-0820060	for belt width 20 mm	B	grey cast iron	60	152,79	80	14	151,42	158	127	28	38
22004-0820064	for belt width 20 mm	B	grey cast iron	64	162,97	80	14	161,6	168	137	28	38
22004-0820072	for belt width 20 mm	B	grey cast iron	72	183,35	80	14	181,97	192	158	28	38
22004-0820080	for belt width 20 mm	E	grey cast iron	80	203,72	90	14	202,35	-	179	28	38
22004-0820084	for belt width 20 mm	E	grey cast iron	84	213,9	90	14	212,53	-	190	28	38
22004-0820090	for belt width 20 mm	E	grey cast iron	90	229,18	90	14	227,81	-	204	28	38
22004-0820112	for belt width 20 mm	E	grey cast iron	112	285,21	90	20	283,83	-	260	28	38
22004-0820144	for belt width 20 mm	E	grey cast iron	144	366,69	90	20	365,32	-	342	28	38
22004-0820168	for belt width 20 mm	E	grey cast iron	168	427,8	100	20	426,42	-	403	28	38
22004-0820192	for belt width 20 mm	E	grey cast iron	192	488,92	100	20	487,54	-	465	28	38

Toothed pulleys

profile HTD 8M

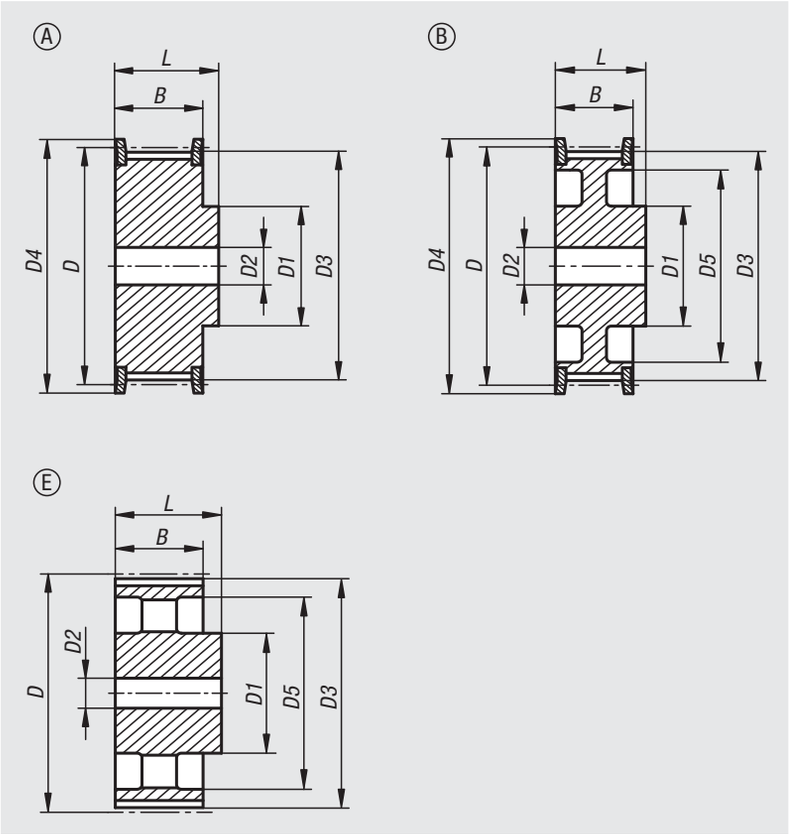

Order No.	Version	Form	Material	No. of teeth	D	D1 max.	D2 max.	D3	D4 max.	D5	B	L
22004-0830018	for belt width 30 mm	A	steel	18	45,84	32	12	44,46	51	-	38	48
22004-0830020	for belt width 30 mm	A	steel	20	50,93	36	12	49,56	57	-	38	48
22004-0830022	for belt width 30 mm	A	steel	22	56,02	43	12	54,65	62	-	38	48
22004-0830024	for belt width 30 mm	A	steel	24	61,12	49	12	59,74	67	-	38	48
22004-0830026	for belt width 30 mm	A	steel	26	66,21	50	12	64,84	73	-	38	48
22004-0830028	for belt width 30 mm	A	steel	28	71,3	55	14	69,93	77	-	38	48
22004-0830030	for belt width 30 mm	A	steel	30	76,39	60	14	75,02	84	-	38	48
22004-0830032	for belt width 30 mm	A	steel	32	81,49	64	14	80,12	88	-	38	48
22004-0830034	for belt width 30 mm	A	steel	34	86,58	70	14	85,21	94	-	38	48
22004-0830036	for belt width 30 mm	A	steel	36	91,67	75	14	90,3	98	-	38	48
22004-0830038	for belt width 30 mm	A	steel	38	96,77	80	14	95,39	104	-	38	48
22004-0830040	for belt width 30 mm	A	steel	40	101,86	85	14	100,49	108	-	38	48
22004-0830044	for belt width 30 mm	A	grey cast iron	44	112,05	96	14	110,67	121	-	38	48
22004-0830048	for belt width 30 mm	A	grey cast iron	48	122,23	104	14	120,86	129	-	38	48
22004-0830056	for belt width 30 mm	B	grey cast iron	56	142,6	90	14	141,23	150	117	38	48
22004-0830060	for belt width 30 mm	B	grey cast iron	60	152,79	90	14	151,42	158	127	38	48
22004-0830064	for belt width 30 mm	B	grey cast iron	64	162,97	90	14	161,6	168	137	38	48
22004-0830072	for belt width 30 mm	B	grey cast iron	72	183,35	95	14	181,97	192	158	38	48
22004-0830080	for belt width 30 mm	E	grey cast iron	80	203,72	100	14	202,35	-	179	38	48
22004-0830084	for belt width 30 mm	E	grey cast iron	84	213,9	100	14	212,53	-	190	38	48
22004-0830090	for belt width 30 mm	E	grey cast iron	90	229,18	100	14	227,81	-	204	38	48
22004-0830112	for belt width 30 mm	E	grey cast iron	112	285,21	100	20	283,83	-	260	38	48
22004-0830144	for belt width 30 mm	E	grey cast iron	144	366,69	100	20	365,32	-	342	38	48
22004-0830168	for belt width 30 mm	E	grey cast iron	168	427,8	100	20	426,42	-	403	38	48
22004-0830192	for belt width 30 mm	E	grey cast iron	192	488,92	100	20	487,54	-	465	38	48

Toothed pulleys

profile HTD 8M

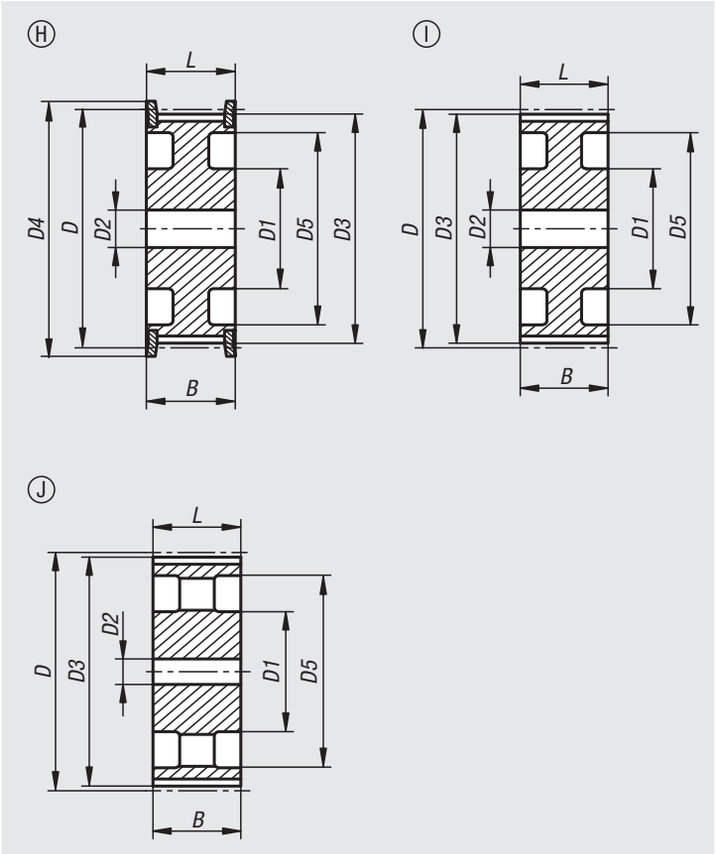

Order No.	Version	Form	Material	No. of teeth	D	D1 max.	D2 max.	D3	D4 max.	D5	B	L
22004-0850018	for belt width 50 mm	A	steel	18	45,84	32	12	44,46	51	-	60	70
22004-0850020	for belt width 50 mm	A	steel	20	50,93	36	12	49,56	57	-	60	70
22004-0850022	for belt width 50 mm	A	steel	22	56,02	43	12	54,65	62	-	60	70
22004-0850024	for belt width 50 mm	A	steel	24	61,12	49	12	59,74	67	-	60	70
22004-0850026	for belt width 50 mm	A	steel	26	66,21	50	12	64,84	73	-	60	70
22004-0850028	for belt width 50 mm	A	steel	28	71,3	55	14	69,93	77	-	60	70
22004-0850030	for belt width 50 mm	A	steel	30	76,39	60	14	75,02	84	-	60	70
22004-0850032	for belt width 50 mm	A	steel	32	81,49	64	14	80,12	88	-	60	70
22004-0850034	for belt width 50 mm	A	steel	34	86,58	70	14	85,21	94	-	60	70
22004-0850036	for belt width 50 mm	A	steel	36	91,67	75	14	90,3	98	-	60	70
22004-0850038	for belt width 50 mm	A	steel	38	96,77	80	14	95,39	104	-	60	70
22004-0850040	for belt width 50 mm	A	steel	40	101,86	85	14	100,49	108	-	60	70
22004-0850044	for belt width 50 mm	A	grey cast iron	44	112,05	96	14	110,67	121	-	60	70
22004-0850048	for belt width 50 mm	A	grey cast iron	48	122,23	104	14	120,86	129	-	60	70
22004-0850056	for belt width 50 mm	H	grey cast iron	56	142,6	90	14	141,23	150	117	60	60
22004-0850060	for belt width 50 mm	H	grey cast iron	60	152,79	100	14	151,42	158	127	60	60
22004-0850064	for belt width 50 mm	H	grey cast iron	64	162,97	100	14	161,6	168	137	60	60
22004-0850072	for belt width 50 mm	H	grey cast iron	72	183,35	100	14	181,97	192	158	60	60
22004-0850080	for belt width 50 mm	I	grey cast iron	80	203,72	110	14	202,35	-	179	60	60
22004-0850084	for belt width 50 mm	J	grey cast iron	84	213,9	110	14	212,53	-	190	60	60
22004-0850090	for belt width 50 mm	J	grey cast iron	90	229,18	110	14	227,81	-	204	60	60
22004-0850112	for belt width 50 mm	J	grey cast iron	112	285,21	110	20	283,83	-	260	60	60
22004-0850144	for belt width 50 mm	J	grey cast iron	144	366,69	110	20	365,32	-	342	60	60
22004-0850168	for belt width 50 mm	J	grey cast iron	168	427,8	120	20	426,42	-	403	60	60
22004-0850192	for belt width 50 mm	J	grey cast iron	192	488,92	130	20	487,54	-	465	60	60

Toothed pulleys

profile HTD 5M, for assembly with taper clamping bushes

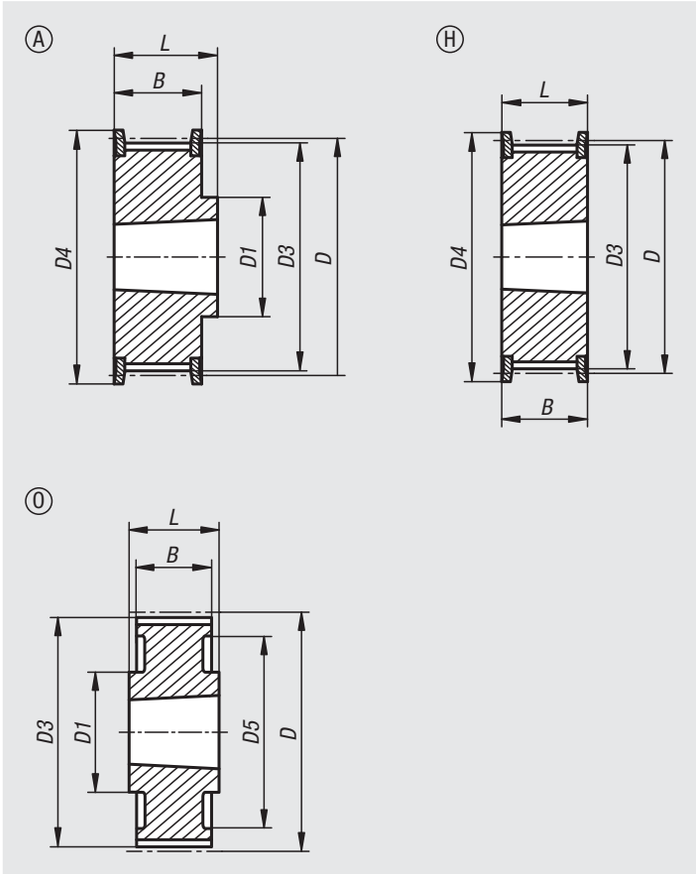

Material:
Steel or grey cast iron.

Version:
Phosphated

Sample order:
nlm 22005-0515034

Note:
Standard HTD profile with metric pitch (rounded toothing). At least one toothed belt pulley must have a rim flange. Conical hole for taper clamping bushes. The taper clamping bushes must be ordered separately and are available for various shaft diameters. Pulleys with a taper hole are statically balanced as per ISO 1940 grade G16.

Accessories:
Taper clamping bushes 23200.

Order No.	Version	Form	Main material	Type	No. of teeth	D	D1 max.	D3	D4 max.	D5	B	L
22005-0515034	for belt width 15 mm	H	steel	for taper bush 1008	34	54,11	-	52,97	57	-	22	22
22005-0515036	for belt width 15 mm	H	steel	for taper bush 1108	36	57,3	-	56,16	62	-	22	22
22005-0515038	for belt width 15 mm	H	steel	for taper bush 1108	38	60,48	-	59,34	67	-	22	22
22005-0515040	for belt width 15 mm	H	steel	for taper bush 1108	40	63,66	-	62,52	73	-	22	22
22005-0515044	for belt width 15 mm	H	steel	for taper bush 1108	44	70,03	-	68,89	75	-	22	22
22005-0515048	for belt width 15 mm	A	steel	for taper bush 1210	48	76,39	64	75,25	84	-	20,5	25
22005-0515056	for belt width 15 mm	A	grey cast iron	for taper bush 1210	56	89,13	70	87,99	94	-	20,5	25
22005-0515064	for belt width 15 mm	A	grey cast iron	for taper bush 1210	64	101,86	80	100,72	108	-	20,5	25
22005-0515072	for belt width 15 mm	A	grey cast iron	for taper bush 1610	72	114,59	92	113,45	121	-	20,5	25
22005-0515080	for belt width 15 mm	A	grey cast iron	for taper bush 1610	80	127,32	92	126,18	135	-	20,5	25
22005-0515090	for belt width 15 mm	O	grey cast iron	for taper bush 1610	90	143,24	92	142,1	-	122	20,5	25
22005-0515112	for belt width 15 mm	O	grey cast iron	for taper bush 1610	112	178,25	110	177,11	-	157	20,5	25

Toothed pulleys

profile HTD 8M, for assembly with taper clamping bushes

Material:
Cast Iron.

Version:
Phosphated

Sample order:
nlm 22005-0820022

Note:
Standard HTD profile with metric pitch (rounded toothing). At least one toothed belt pulley must have a rim flange. Conical hole for taper clamping bushes. The taper clamping bushes must be ordered separately and are available for various shaft diameters. Pulleys with a taper hole are statically balanced as per ISO 1940 grade G16.

Accessories:
Taper clamping bushes 23200.

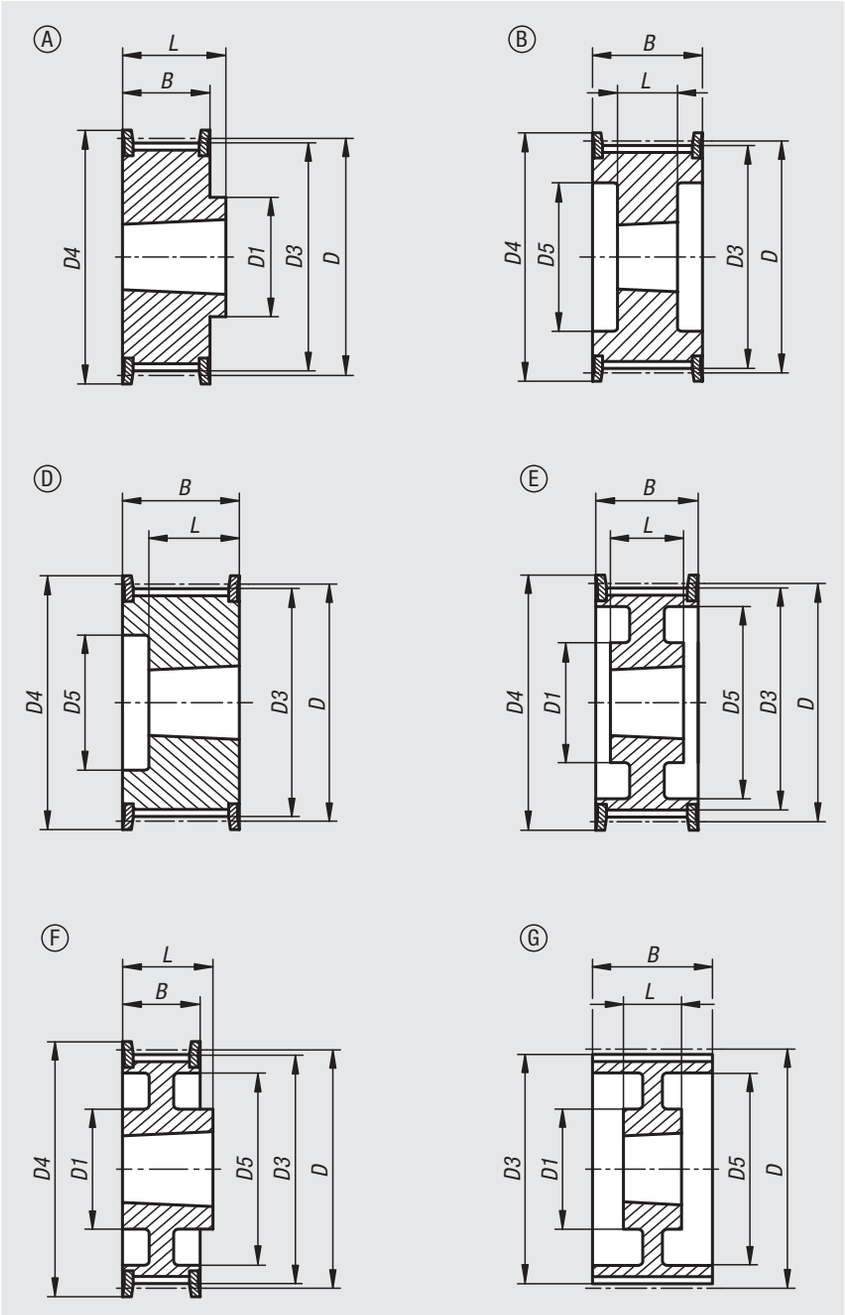

Toothed pulleys

profile HTD 8M, for assembly with taper clamping bushes

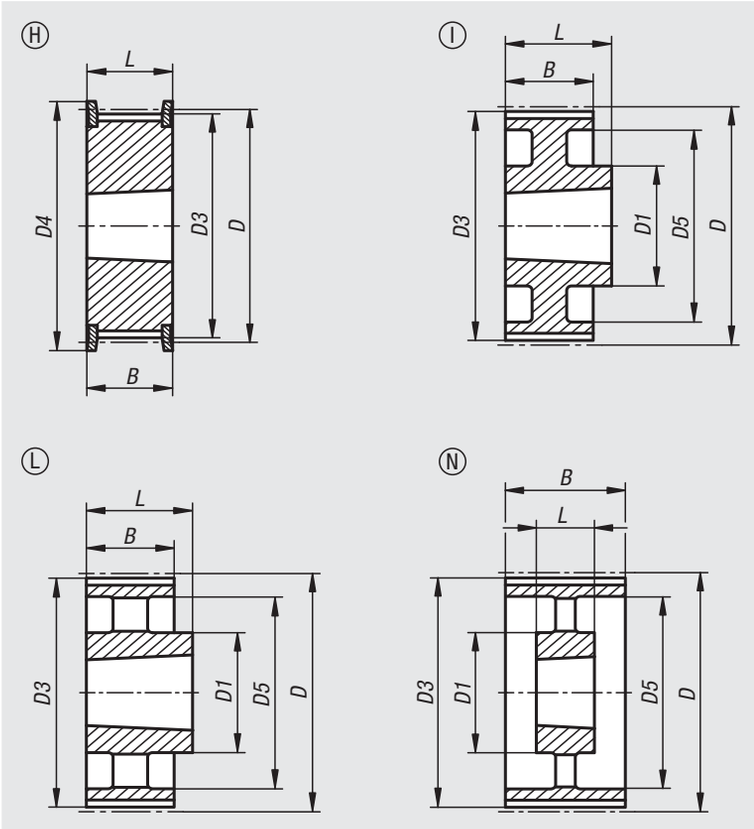

Order No.	Version	Form	Main material	Type	No. of teeth	D	D1 max.	D3	D4 max.	D5	B	L
22005-0820022	for belt width 20 mm	D	grey cast iron	for taper bush 1008	22	56,02	-	54,65	62	38	28	22
22005-0820024	for belt width 20 mm	D	grey cast iron	for taper bush 1108	24	61,12	-	59,74	67	42	28	22
22005-0820026	for belt width 20 mm	D	grey cast iron	for taper bush 1108	26	66,21	-	64,84	73	45	28	22
22005-0820028	for belt width 20 mm	D	grey cast iron	for taper bush 1108	28	71,3	-	69,93	77	52	28	22
22005-0820030	for belt width 20 mm	D	grey cast iron	for taper bush 1108	30	76,39	-	75,02	84	56	28	22
22005-0820032	for belt width 20 mm	D	grey cast iron	for taper bush 1610	32	81,49	-	80,12	88	65	28	25
22005-0820034	for belt width 20 mm	D	grey cast iron	for taper bush 1610	34	86,58	-	85,21	94	66	28	25
22005-0820036	for belt width 20 mm	D	grey cast iron	for taper bush 1610	36	91,67	-	90,3	98	68	28	25
22005-0820038	for belt width 20 mm	D	grey cast iron	for taper bush 1610	38	96,77	-	95,39	104	76	28	25
22005-0820040	for belt width 20 mm	D	grey cast iron	for taper bush 1610	40	101,86	-	100,49	108	80	28	25
22005-0820044	for belt width 20 mm	A	grey cast iron	for taper bush 2012	44	112,05	99	110,67	121	-	28	32
22005-0820048	for belt width 20 mm	A	grey cast iron	for taper bush 2012	48	122,23	105	120,86	129	-	28	32
22005-0820056	for belt width 20 mm	A	grey cast iron	for taper bush 2012	56	142,6	110	141,23	150	-	28	32
22005-0820064	for belt width 20 mm	F	grey cast iron	for taper bush 2012	64	162,97	110	161,6	168	140	28	32
22005-0820072	for belt width 20 mm	F	grey cast iron	for taper bush 2012	72	183,35	110	181,97	192	158	28	32
22005-0820080	for belt width 20 mm	I	grey cast iron	for taper bush 2012	80	203,74	110	202,35	-	178	28	32
22005-0820090	for belt width 20 mm	L	grey cast iron	for taper bush 2012	90	229,18	110	227,81	-	204	28	32

Toothed pulleys

profile HTD 8M, for assembly with taper clamping bushes

Order No.	Version	Form	Main material	Type	No. of teeth	D	D1 max.	D3	D4 max.	D5	B	L
22005-0830022	for belt width 30 mm	D	grey cast iron	for taper bush 1008	22	56,02	-	54,65	62	38	38	22
22005-0830024	for belt width 30 mm	D	grey cast iron	for taper bush 1108	24	61,12	-	59,74	67	42	38	22
22005-0830026	for belt width 30 mm	D	grey cast iron	for taper bush 1108	26	66,21	-	64,84	73	45	38	22
22005-0830028	for belt width 30 mm	D	grey cast iron	for taper bush 1108	28	71,3	-	69,93	77	52	38	22
22005-0830030	for belt width 30 mm	H	grey cast iron	for taper bush 1615	30	76,39	-	75,02	84	-	38	38
22005-0830032	for belt width 30 mm	H	grey cast iron	for taper bush 1615	32	81,49	-	80,12	88	-	38	38
22005-0830034	for belt width 30 mm	H	grey cast iron	for taper bush 1615	34	86,58	-	85,21	94	-	38	38
22005-0830036	for belt width 30 mm	H	grey cast iron	for taper bush 1615	36	91,67	-	90,3	98	-	38	38
22005-0830038	for belt width 30 mm	H	grey cast iron	for taper bush 1615	38	96,77	-	95,39	104	-	38	38
22005-0830040	for belt width 30 mm	H	grey cast iron	for taper bush 1615	40	101,86	-	100,49	108	-	38	38
22005-0830044	for belt width 30 mm	B	grey cast iron	for taper bush 2012	44	112,05	-	110,67	121	90	38	32
22005-0830048	for belt width 30 mm	B	grey cast iron	for taper bush 2012	48	122,23	-	120,86	129	98	38	32
22005-0830056	for belt width 30 mm	B	grey cast iron	for taper bush 2012	56	142,6	-	141,23	150	118	38	32
22005-0830064	for belt width 30 mm	F	grey cast iron	for taper bush 2517	64	162,97	125	161,6	168	140	38	45
22005-0830072	for belt width 30 mm	F	grey cast iron	for taper bush 2517	72	183,35	125	181,97	192	158	38	45
22005-0830080	for belt width 30 mm	I	grey cast iron	for taper bush 2517	80	203,74	125	202,35	-	178	38	45
22005-0830090	for belt width 30 mm	L	grey cast iron	for taper bush 2517	90	229,18	125	227,81	-	204	38	45
22005-0830112	for belt width 30 mm	L	grey cast iron	for taper bush 2517	112	285,21	125	283,83	-	260	38	45
22005-0830144	for belt width 30 mm	L	grey cast iron	for taper bush 2517	144	366,69	125	365,32	-	341	38	45

Order No.	Version	Form	Main material	Type	No. of teeth	D	D1 max.	D3	D4 max.	D5	B	L
22005-0850028	for belt width 50 mm	B	grey cast iron	for taper bush 1108	28	71,3	-	69,93	77	52	60	22
22005-0850030	for belt width 50 mm	D	grey cast iron	for taper bush 1615	30	76,39	-	75,02	84	58	60	38
22005-0850032	for belt width 50 mm	D	grey cast iron	for taper bush 1615	32	81,49	-	80,12	88	60	60	38
22005-0850034	for belt width 50 mm	D	grey cast iron	for taper bush 1615	34	86,58	-	85,21	94	66	60	38
22005-0850036	for belt width 50 mm	D	grey cast iron	for taper bush 1615	36	91,67	-	90,3	98	68	60	38
22005-0850038	for belt width 50 mm	D	grey cast iron	for taper bush 1615	38	96,77	-	95,39	104	75	60	38
22005-0850040	for belt width 50 mm	B	grey cast iron	for taper bush 2012	40	101,86	-	100,49	108	80	60	32
22005-0850044	for belt width 50 mm	B	grey cast iron	for taper bush 2012	44	112,05	-	110,67	121	90	60	32
22005-0850048	for belt width 50 mm	B	grey cast iron	for taper bush 2012	48	122,23	-	120,86	129	100	60	32
22005-0850056	for belt width 50 mm	B	grey cast iron	for taper bush 2517	56	142,6	-	141,23	150	120	60	45
22005-0850064	for belt width 50 mm	E	grey cast iron	for taper bush 2517	64	162,97	120	161,6	168	138	60	45
22005-0850072	for belt width 50 mm	E	grey cast iron	for taper bush 2517	72	183,35	125	181,97	192	158	60	45
22005-0850080	for belt width 50 mm	G	grey cast iron	for taper bush 3020	80	203,74	170	202,35	-	178	60	51
22005-0850090	for belt width 50 mm	G	grey cast iron	for taper bush 3020	90	229,18	170	227,81	-	204	60	51
22005-0850112	for belt width 50 mm	N	grey cast iron	for taper bush 3020	112	285,21	170	283,83	-	260	60	51
22005-0850144	for belt width 50 mm	N	grey cast iron	for taper bush 3020	144	366,69	170	365,32	-	341	60	51
22005-0850168	for belt width 50 mm	N	grey cast iron	for taper bush 3020	168	427,8	198	426,42	-	402	60	51
22005-0850192	for belt width 50 mm	N	grey cast iron	for taper bush 3020	192	488,92	198	487,54	-	462	60	51

Splined shafts

T profile

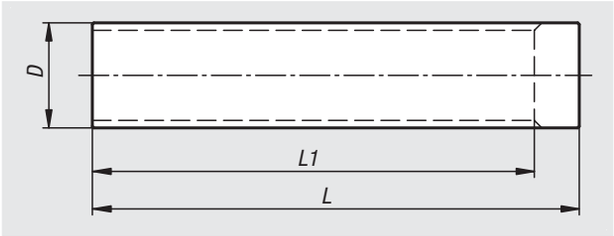

Material:
Aluminium.

Version:
Bright.

Sample order:
nlm 22007-05010

Note:
Standard T-profile to DIN 7721 T2 with metric pitch (trapezoidal toothing). For manufacturing your own toothed wheels

Splined shafts, T5 profile

Order No.	Profile	No. of teeth	D	L	L1
22007-05010	T5	10	15,05	140	125
22007-05011	T5	11	16,65	140	125
22007-05012	T5	12	18,25	140	125
22007-05013	T5	13	19,85	140	125
22007-05014	T5	14	21,45	140	132
22007-05015	T5	15	23,05	140	132
22007-05016	T5	16	24,6	140	140
22007-05017	T5	17	26,2	140	140
22007-05018	T5	18	27,8	140	140
22007-05019	T5	19	29,4	140	140
22007-05020	T5	20	31	160	160
22007-05021	T5	21	32,7	160	160
22007-05022	T5	22	34,15	160	160
22007-05023	T5	23	35,85	160	160
22007-05024	T5	24	37,4	160	160
22007-05025	T5	25	38,95	160	160
22007-05026	T5	26	40,6	160	160
22007-05027	T5	27	42,2	160	160
22007-05028	T5	28	43,75	160	160
22007-05029	T5	29	45,35	160	160
22007-05030	T5	30	46,95	160	160
22007-05032	T5	32	50,1	160	160
22007-05034	T5	34	53,25	160	160
22007-05035	T5	35	54,85	160	160
22007-05036	T5	36	56,45	160	160
22007-05037	T5	37	58,06	160	160
22007-05038	T5	38	59,65	160	160
22007-05040	T5	40	62,85	160	160
22007-05042	T5	42	66	160	160
22007-05044	T5	44	69,2	160	160
22007-05045	T5	45	70,8	160	160
22007-05046	T5	46	72,4	160	160
22007-05048	T5	48	75,55	160	160
22007-05050	T5	50	78,75	160	160
22007-05060	T5	60	94,65	160	160
22007-05072	T5	72	113,75	160	160
22007-05080	T5	80	126,48	160	160
22007-05090	T5	90	142,4	160	160
22007-05100	T5	100	158,31	160	160

Splined shafts, T10 profile

Order No.	Profile	No. of teeth	D	L	L1
22007-10010	T10	10	29,98	140	140
22007-10011	T10	11	33,16	140	140
22007-10012	T10	12	36,35	140	140
22007-10013	T10	13	39,5	140	140
22007-10014	T10	14	42,7	160	160
22007-10015	T10	15	45,9	160	160
22007-10016	T10	16	49,1	160	160
22007-10017	T10	17	52,25	160	160
22007-10018	T10	18	55,45	160	160
22007-10019	T10	19	58,65	160	160
22007-10020	T10	20	61,8	160	160
22007-10021	T10	21	65	160	160
22007-10022	T10	22	68,2	160	160
22007-10023	T10	23	71,35	160	160
22007-10024	T10	24	74,55	160	160
22007-10026	T10	26	80,9	160	160
22007-10028	T10	28	87,25	160	160
22007-10030	T10	30	93,65	160	160
22007-10032	T10	32	100	160	160
22007-10034	T10	34	106,4	160	160
22007-10036	T10	36	112,75	160	160
22007-10038	T10	38	119,1	160	160
22007-10040	T10	40	125,45	160	160
22007-10045	T10	45	141,4	160	160
22007-10048	T10	48	150,95	160	160
22007-10060	T10	60	189,1	160	160
22007-10072	T10	72	227,29	160	160

Splined shafts

AT profile

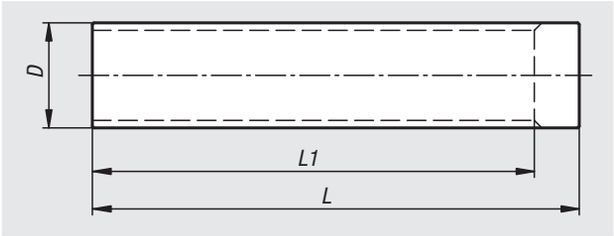

Material:
Aluminium.

Version:
Bright.

Sample order:
nlm 22008-05012

Note:
Standard AT-profile with metric pitch (trapezoidal toothing).
For manufacturing your own toothed wheels

Splined shafts, AT5 profile

Order No.	Profile	No. of teeth	D	L	L1
22008-05012	AT5	12	17,85	140	125
22008-05013	AT5	13	19,45	140	125
22008-05014	AT5	14	21,05	140	132
22008-05015	AT5	15	22,65	140	132
22008-05016	AT5	16	24,2	140	140
22008-05017	AT5	17	25,8	140	140
22008-05018	AT5	18	27,4	140	140
22008-05019	AT5	19	29	140	140
22008-05020	AT5	20	30,6	160	160
22008-05021	AT5	21	32,3	160	160
22008-05022	AT5	22	33,85	160	160
22008-05023	AT5	23	35,45	160	160
22008-05024	AT5	24	37	160	160
22008-05025	AT5	25	38,6	160	160
22008-05026	AT5	26	40,2	160	160
22008-05027	AT5	27	41,8	160	160
22008-05028	AT5	28	43,35	160	160
22008-05030	AT5	30	46,55	160	160
22008-05032	AT5	32	49,7	160	160
22008-05034	AT5	34	52,85	160	160
22008-05036	AT5	36	56,05	160	160
22008-05038	AT5	38	59,25	160	160
22008-05040	AT5	40	62,45	160	160
22008-05042	AT5	42	65,6	160	160
22008-05044	AT5	44	68,8	160	160
22008-05046	AT5	46	72	160	160
22008-05048	AT5	48	75,15	160	160
22008-05052	AT5	52	81,55	160	160
22008-05056	AT5	56	87,9	160	160
22008-05058	AT5	58	91,1	160	160
22008-05060	AT5	60	94,25	160	160
22008-05064	AT5	64	100,65	160	160
22008-05072	AT5	72	113,25	160	160

Splined shafts, AT10 profile

Order No.	Profile	No. of teeth	D	L	L1
22008-10015	AT10	15	45,9	160	160
22008-10016	AT10	16	49,05	160	160
22008-10017	AT10	17	52,25	160	160
22008-10018	AT10	18	55,45	160	160
22008-10019	AT10	19	58,6	160	160
22008-10020	AT10	20	61,8	160	160
22008-10021	AT10	21	65	160	160
22008-10022	AT10	22	68,15	160	160
22008-10023	AT10	23	71,35	160	160
22008-10024	AT10	24	74,55	160	160
22008-10025	AT10	25	77,7	160	160
22008-10026	AT10	26	80,9	160	160
22008-10027	AT10	27	84,1	160	160
22008-10028	AT10	28	87,25	160	160
22008-10030	AT10	30	93,65	160	160
22008-10032	AT10	32	100	160	160
22008-10034	AT10	34	106,4	160	160
22008-10036	AT10	36	112,75	160	160
22008-10038	AT10	38	119,1	160	160
22008-10040	AT10	40	125,45	160	160
22008-10042	AT10	42	131,85	160	160
22008-10044	AT10	44	138,2	160	160
22008-10046	AT10	46	144,55	160	160
22008-10048	AT10	48	150,95	160	160
22008-10052	AT10	52	163,65	160	160
22008-10056	AT10	56	176,4	160	160
22008-10058	AT10	58	182,75	160	160
22008-10060	AT10	60	189,1	160	160
22008-10070	AT10	70	220,95	160	160

Clamp plates for toothed belts

profile T and AT

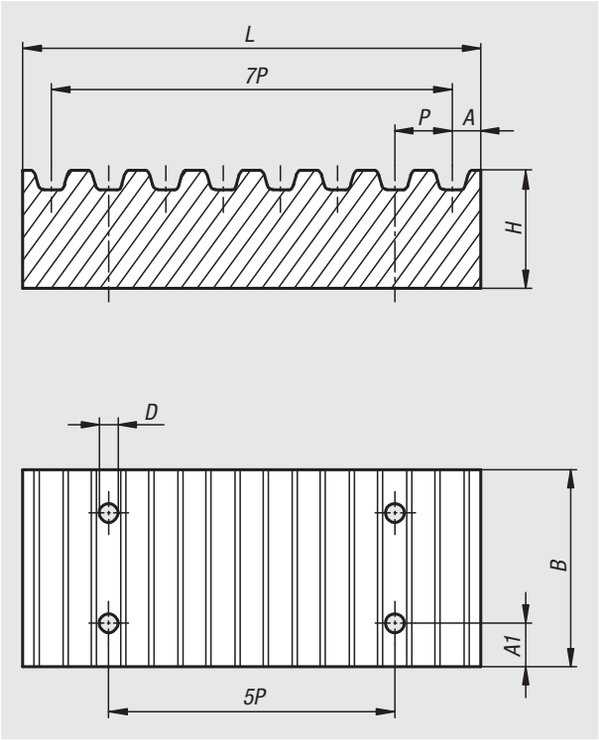

Material:
Aluminium.

Version:
Bright.

Sample order:
nlm 22012-05101

Note:
Clamp plates are used to mechanically secure the free belt end for numerous linear applications. The clamp plates must have matching tooth profiles to the belts to be secure to apply a uniform clamping force. For standard applications at least 7 belt teeth per belt end and must be engaged.

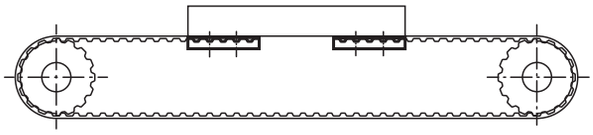

Order No.	Profile	Belt width	P	A	A1	B	D	H	L
22012-05101	T5	10	5	3,4	6	29	5,5	8	41,8
22012-05161	T5	16	5	3,4	6	35	5,5	8	41,8
22012-05251	T5	25	5	3,4	6	44	5,5	8	41,8
22012-10161	T10	16	10	5	8	41	9	15	80
22012-10251	T10	25	10	5	8	50	9	15	80
22012-10321	T10	32	10	5	8	57	9	15	80
22012-05102	AT5	10	5	3,4	6	29	5,5	8	41,8
22012-05162	AT5	16	5	3,4	6	35	5,5	8	41,8
22012-05252	AT5	25	5	3,4	6	44	5,5	8	41,8
22012-10162	AT10	16	10	5	8	41	9	15	80
22012-10252	AT10	25	10	5	8	50	9	15	80
22012-10322	AT10	32	10	5	8	57	9	15	80

Toothed belts

T profile

Material:
Polyurethane (PU) with steel cord reinforcement.

Sample order:
nlm 22052-0510X0165

Note:
Endless toothed belt with trapezoidal profile to DIN 7721 T1 with metric pitch. Ideal for drives with high belt flexibility. Permits smallest pulley diameters. The toothed belts are intended for drives where precision is a requirement, safety is important and the effects of chemicals are a concern.

Temperature range:
from -30°C to +90°C

Features:
- maintenance-free
- high-power transmission
- minimal belt extension
- accurate positioning and angles
- very good chemical resistance, especially to oils, greases and fuels
- extremely high abrasion resistance
- transmits power up to 30 kW
- reliable speed up to 10,000 rpm

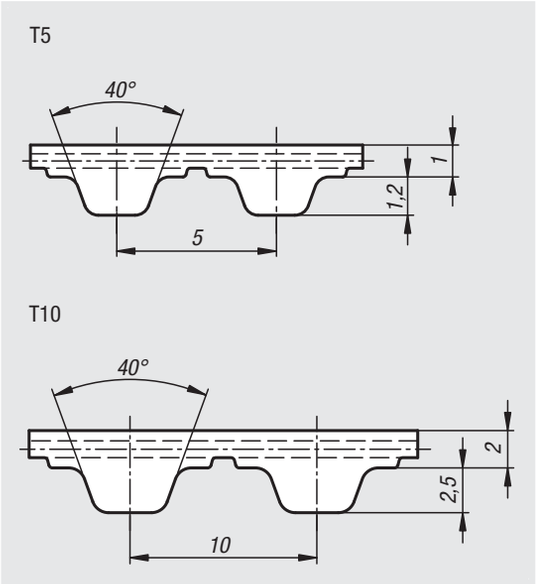

Toothed belts T5 profile

Order No. Belt width 10	Order No. Belt width 16	Order No. Belt width 25	No. of teeth	Effective length
22052-0510X0165	22052-0516X0165	22052-0525X0165	33	165
22052-0510X0185	22052-0516X0185	22052-0525X0185	37	185
22052-0510X0200	22052-0516X0200	22052-0525X0200	40	200
22052-0510X0215	22052-0516X0215	22052-0525X0215	43	215
22052-0510X0220	22052-0516X0220	22052-0525X0220	44	220
22052-0510X0225	22052-0516X0225	22052-0525X0225	45	225
22052-0510X0245	22052-0516X0245	22052-0525X0245	49	245
22052-0510X0250	22052-0516X0250	22052-0525X0250	50	250
22052-0510X0255	22052-0516X0255	22052-0525X0255	51	255
22052-0510X0260	22052-0516X0260	22052-0525X0260	52	260
22052-0510X0270	22052-0516X0270	22052-0525X0270	54	270
22052-0510X0275	22052-0516X0275	22052-0525X0275	55	275
22052-0510X0280	22052-0516X0280	22052-0525X0280	56	280
22052-0510X0295	22052-0516X0295	22052-0525X0295	59	295
22052-0510X0300	22052-0516X0300	22052-0525X0300	60	300
22052-0510X0305	22052-0516X0305	22052-0525X0305	61	305
22052-0510X0325	22052-0516X0325	22052-0525X0325	65	325
22052-0510X0330	22052-0516X0330	22052-0525X0330	66	330
22052-0510X0340	22052-0516X0340	22052-0525X0340	68	340
22052-0510X0350	22052-0516X0350	22052-0525X0350	70	350
22052-0510X0355	22052-0516X0355	22052-0525X0355	71	355
22052-0510X0365	22052-0516X0365	22052-0525X0365	73	365
22052-0510X0375	22052-0516X0375	22052-0525X0375	75	375
22052-0510X0390	22052-0516X0390	22052-0525X0390	78	390
22052-0510X0400	22052-0516X0400	22052-0525X0400	80	400
22052-0510X0410	22052-0516X0410	22052-0525X0410	82	410
22052-0510X0420	22052-0516X0420	22052-0525X0420	84	420
22052-0510X0425	22052-0516X0425	22052-0525X0425	85	425
22052-0510X0450	22052-0516X0450	22052-0525X0450	90	450
22052-0510X0455	22052-0516X0455	22052-0525X0455	91	455
22052-0510X0475	22052-0516X0475	22052-0525X0475	95	475

Toothed belts

T profile

Toothed belts T5 profile

Order No. Belt width 10	Order No. Belt width 16	Order No. Belt width 25	No. of teeth	Effective length
22052-0510X0480	22052-0516X0480	22052-0525X0480	96	480
22052-0510X0500	22052-0516X0500	22052-0525X0500	100	500
22052-0510X0510	22052-0516X0510	22052-0525X0510	102	510
22052-0510X0525	22052-0516X0525	22052-0525X0525	105	525
22052-0510X0545	22052-0516X0545	22052-0525X0545	109	545
22052-0510X0550	22052-0516X0550	22052-0525X0550	110	550
22052-0510X0560	22052-0516X0560	22052-0525X0560	112	560
22052-0510X0575	22052-0516X0575	22052-0525X0575	115	575
22052-0510X0600	22052-0516X0600	22052-0525X0600	120	600
22052-0510X0610	22052-0516X0610	22052-0525X0610	122	610
22052-0510X0620	22052-0516X0620	22052-0525X0620	124	620
22052-0510X0630	22052-0516X0630	22052-0525X0630	126	630
22052-0510X0640	22052-0516X0640	22052-0525X0640	128	640
22052-0510X0650	22052-0516X0650	22052-0525X0650	130	650
22052-0510X0660	22052-0516X0660	22052-0525X0660	132	660
22052-0510X0690	22052-0516X0690	22052-0525X0690	138	690
22052-0510X0700	22052-0516X0700	22052-0525X0700	140	700
22052-0510X0720	22052-0516X0720	22052-0525X0720	144	720
22052-0510X0750	22052-0516X0750	22052-0525X0750	150	750
22052-0510X0780	22052-0516X0780	22052-0525X0780	156	780
22052-0510X0815	22052-0516X0815	22052-0525X0815	163	815
22052-0510X0840	22052-0516X0840	22052-0525X0840	168	840
22052-0510X0850	22052-0516X0850	22052-0525X0850	170	850
22052-0510X0900	22052-0516X0900	22052-0525X0900	180	900
22052-0510X0990	22052-0516X0990	22052-0525X0990	198	990
22052-0510X1000	22052-0516X1000	22052-0525X1000	200	1000
22052-0510X1075	22052-0516X1075	22052-0525X1075	215	1075
22052-0510X1100	22052-0516X1100	22052-0525X1100	220	1100
22052-0510X1215	22052-0516X1215	22052-0525X1215	243	1215
22052-0510X1380	22052-0516X1380	22052-0525X1380	276	1380
22052-0510X1440	22052-0516X1440	22052-0525X1440	288	1440

Toothed belts T10 profile

Order No. Belt width 16	Order No. Belt width 25	Order No. Belt width 32	No. of teeth	Effective length
22052-1016X0260	22052-1025X0260	22052-1032X0260	26	260
22052-1016X0370	22052-1025X0370	22052-1032X0370	37	370
22052-1016X0400	22052-1025X0400	22052-1032X0400	40	400
22052-1016X0410	22052-1025X0410	22052-1032X0410	41	410
22052-1016X0440	22052-1025X0440	22052-1032X0440	44	440
22052-1016X0450	22052-1025X0450	22052-1032X0450	45	450
22052-1016X0500	22052-1025X0500	22052-1032X0500	50	500
22052-1016X0530	22052-1025X0530	22052-1032X0530	53	530

Toothed belts

T profile

Toothed belts T10 profile

Order No. Belt width 16	Order No. Belt width 25	Order No. Belt width 32	No. of teeth	Effective length
22052-1016X0560	22052-1025X0560	22052-1032X0560	56	560
22052-1016X0610	22052-1025X0610	22052-1032X0610	61	610
22052-1016X0630	22052-1025X0630	22052-1032X0630	63	630
22052-1016X0660	22052-1025X0660	22052-1032X0660	66	660
22052-1016X0690	22052-1025X0690	22052-1032X0690	69	690
22052-1016X0700	22052-1025X0700	22052-1032X0700	70	700
22052-1016X0720	22052-1025X0720	22052-1032X0720	72	720
22052-1016X0750	22052-1025X0750	22052-1032X0750	75	750
22052-1016X0780	22052-1025X0780	22052-1032X0780	78	780
22052-1016X0810	22052-1025X0810	22052-1032X0810	81	810
22052-1016X0840	22052-1025X0840	22052-1032X0840	84	840
22052-1016X0880	22052-1025X0880	22052-1032X0880	88	880
22052-1016X0890	22052-1025X0890	22052-1032X0890	89	890
22052-1016X0900	22052-1025X0900	22052-1032X0900	90	900
22052-1016X0920	22052-1025X0920	22052-1032X0920	92	920
22052-1016X0960	22052-1025X0960	22052-1032X0960	96	960
22052-1016X0970	22052-1025X0970	22052-1032X0970	97	970
22052-1016X0980	22052-1025X0980	22052-1032X0980	98	980
22052-1016X1010	22052-1025X1010	22052-1032X1010	101	1010
22052-1016X1080	22052-1025X1080	22052-1032X1080	108	1080
22052-1016X1110	22052-1025X1110	22052-1032X1110	111	1110
22052-1016X1140	22052-1025X1140	22052-1032X1140	114	1140
22052-1016X1150	22052-1025X1150	22052-1032X1150	115	1150
22052-1016X1210	22052-1025X1210	22052-1032X1210	121	1210
22052-1016X1240	22052-1025X1240	22052-1032X1240	124	1240
22052-1016X1250	22052-1025X1250	22052-1032X1250	125	1250
22052-1016X1300	22052-1025X1300	22052-1032X1300	130	1300
22052-1016X1320	22052-1025X1320	22052-1032X1320	132	1320
22052-1016X1350	22052-1025X1350	22052-1032X1350	135	1350
22052-1016X1390	22052-1025X1390	22052-1032X1390	139	1390
22052-1016X1400	22052-1025X1400	22052-1032X1400	140	1400
22052-1016X1420	22052-1025X1420	22052-1032X1420	142	1420
22052-1016X1440	22052-1025X1440	22052-1032X1440	144	1440
22052-1016X1450	22052-1025X1450	22052-1032X1450	145	1450
22052-1016X1460	22052-1025X1460	22052-1032X1460	146	1460
22052-1016X1500	22052-1025X1500	22052-1032X1500	150	1500
22052-1016X1560	22052-1025X1560	22052-1032X1560	156	1560
22052-1016X1610	22052-1025X1610	22052-1032X1610	161	1610
22052-1016X1750	22052-1025X1750	22052-1032X1750	175	1750
22052-1016X1780	22052-1025X1780	22052-1032X1780	178	1780
22052-1016X1880	22052-1025X1880	22052-1032X1880	188	1880
22052-1016X1960	22052-1025X1960	22052-1032X1960	196	1960
22052-1016X2250	22052-1025X2250	22052-1032X2250	225	2250

Toothed belts by the meter

T profile

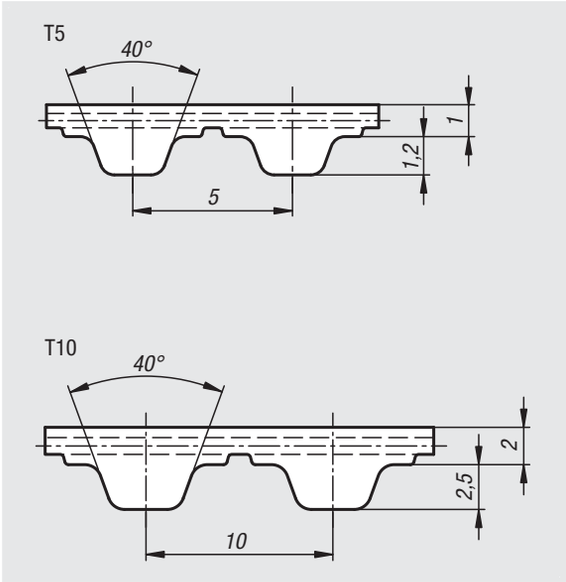

Material:
Polyurethane (PU) with steel cord reinforcement.

Sample order:
nlm 22054-0510X0500
(include length L)

Note:
Toothed belt with trapezoidal profile to DIN 7721 T1. Intended especially for drives subject to high bending loads. May be used for pulleys with a very small diameter. Generally used for linear drives, low-power transmission and transport applications. Polyurethane belts may be welded. The power transmission rating of welded belts drops by about 50%.

Width tolerance: ±0.5 mm
Thickness tolerance: ±0.2 mm

On request:
Other lengths.
With T5 pitch, in 5 mm increments.
With T10 pitch, in 10 mm increments.
Maximum belt length 100 metres.

Order No.	Profile	Belt width	Tension max. N	Length	matching clamp plate
22054-0510X	T5	10	320	500/1000/1500/2000/2500/3000/3500/4000/5000	22012-05101
22054-0516X	T5	16	540	500/1000/1500/2000/2500/3000/3500/4000/5000	22012-05161
22054-0525X	T5	25	900	500/1000/1500/2000/2500/3000/3500/4000/5000	22012-05251
22054-1016X	T10	16	1610	500/1000/1500/2000/2500/3000/3500/4000/5000	22012-10161
22054-1025X	T10	25	2650	500/1000/1500/2000/2500/3000/3500/4000/5000	22012-10251
22054-1032X	T10	32	3450	500/1000/1500/2000/2500/3000/3500/4000/5000	22012-10321

Toothed belts by the meter

T profile

Specific tooth force

The specific tooth force F_{Uspez} is the maximum force that a single engaged belt tooth 1 cm wide can transmit.
This force depends on the speed of the drive pulley. To calculate the transmissible longitudinal force F_U for the belt cross-section, the number z_e of engaged teeth is multiplied by the specific tooth force F_{Uspez} and the belt width b.

$$\mathbf{F_U = F_{Uspec} \bullet z_e \bullet b}$$

F_U = transmissible longitudinal force
F_{Uspec} = specific tooth force
z_e = number of engaged teeth
z_{emax} = for the calculation, perm. maximum number of engaged teeth = 12
b = belt width in cm

Pitch T5

rpm	F_{Uspec} (N/cm)	rpm	F_{Uspec} (N/cm)	rpm	F_{Uspec} (N/cm)	rpm	F_{Uspec} (N/cm)
0	24,70	800	17,02	1900	14,21	4500	11,25
20	24,07	900	16,65	2000	14,03	5000	10,88
40	23,53	1000	16,32	2200	13,71	5500	10,55
60	23,05	1100	16,01	2400	13,42	6000	10,24
80	22,64	1200	15,73	2600	13,14	6500	9,96
100	22,28	1300	15,47	2800	12,89	7000	9,70
200	20,90	1400	15,22	3000	12,65	7500	9,46
300	19,89	1440	15,13	3200	12,43	8000	9,23
400	19,10	1500	15,00	3400	12,22	8500	9,01
500	18,45	1600	14,78	3600	12,03	9000	8,81
600	17,91	1700	14,58	3800	11,84	9500	8,62
700	17,44	1800	14,39	4000	11,66	10000	8,44

Pitch T10

rpm	F_{Uspec} (N/cm)	rpm	F_{Uspec} (N/cm)	rpm	F_{Uspec} (N/cm)	rpm	F_{Uspec} (N/cm)
0	51,80	800	33,34	1900	26,53	4500	19,40
20	50,32	900	32,44	2000	26,12	5000	18,51
40	49,04	1000	31,63	2200	25,34	5500	17,70
60	47,92	1100	30,89	2400	24,63	6000	16,97
80	46,95	1200	30,21	2600	23,97	6500	16,29
100	46,11	1300	29,58	2800	23,36	7000	15,66
200	42,75	1400	28,99	3000	22,78	7500	15,07
300	40,28	1440	28,76	3200	22,25	8000	14,52
400	38,36	1500	28,44	3400	21,74	8500	14,00
500	36,80	1600	27,92	3600	21,27	9000	13,51
600	35,49	1700	27,43	3800	20,81	9500	13,05
700	34,35	1800	26,97	4000	20,39	10000	12,61

Toothed belts

AT profile

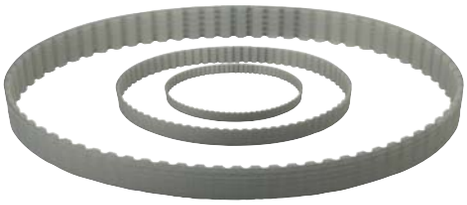

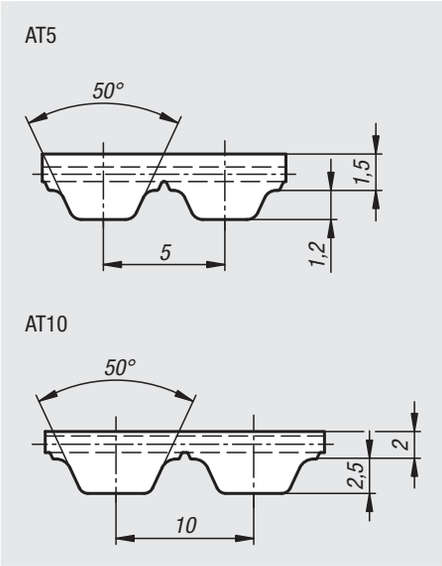

Material:
Polyurethane (PU) with steel cord reinforcement.

Sample order:
nlm 22057-0510X0225

Note:
Endless toothed belt with trapezoidal profile and reinforced steel cord (compared to T-Series) with metric pitch. Optimised tooth profile for more uniform force distribution and lower tooth deformation under load. Reduced polygon effect for quieter belt operation. The toothed belts are intended for drives where precision is a requirement, safety is important and the effects of chemicals are a concern.

Temperature range:
from -30°C to +90°C

Features:
- maintenance-free
- high-power transmission
- minimal belt extension
- accurate positioning and angles
- very good chemical resistance, especially to oils, greases and fuels
- extremely high abrasion resistance
- transmits power up to 70 kW
- reliable speed up to 10,000 rpm

Toothed belts AT5 profile

Order No. Belt width 10	Order No. Belt width 16	Order No. Belt width 25	No. of teeth	Effective length
22057-0510X0225	22057-0516X0225	22057-0525X0225	45	225
22057-0510X0255	22057-0516X0255	22057-0525X0255	51	255
22057-0510X0280	22057-0516X0280	22057-0525X0280	56	280
22057-0510X0300	22057-0516X0300	22057-0525X0300	60	300
22057-0510X0340	22057-0516X0340	22057-0525X0340	68	340
22057-0510X0375	22057-0516X0375	22057-0525X0375	75	375
22057-0510X0390	22057-0516X0390	22057-0525X0390	78	390
22057-0510X0420	22057-0516X0420	22057-0525X0420	84	420
22057-0510X0455	22057-0516X0455	22057-0525X0455	91	455
22057-0510X0500	22057-0516X0500	22057-0525X0500	100	500
22057-0510X0545	22057-0516X0545	22057-0525X0545	109	545
22057-0510X0600	22057-0516X0600	22057-0525X0600	120	600
22057-0510X0610	22057-0516X0610	22057-0525X0610	122	610
22057-0510X0660	22057-0516X0660	22057-0525X0660	132	660
22057-0510X0720	22057-0516X0720	22057-0525X0720	144	720
22057-0510X0750	22057-0516X0750	22057-0525X0750	150	750
22057-0510X0780	22057-0516X0780	22057-0525X0780	156	780
22057-0510X0825	22057-0516X0825	22057-0525X0825	165	825
22057-0510X0975	22057-0516X0975	22057-0525X0975	195	975
22057-0510X1050	22057-0516X1050	22057-0525X1050	210	1050
22057-0510X1125	22057-0516X1125	22057-0525X1125	225	1125
22057-0510X1500	22057-0516X1500	22057-0525X1500	300	1500

Toothed belts

AT profile

Toothed belts AT10 profile

Order No. Belt width 16	Order No. Belt width 25	Order No. Belt width 32	No. of teeth	Effective length
22057-1016X0500	22057-1025X0500	22057-1032X0500	50	500
22057-1016X0560	22057-1025X0560	22057-1032X0560	56	560
22057-1016X0610	22057-1025X0610	22057-1032X0610	61	610
22057-1016X0660	22057-1025X0660	22057-1032X0660	66	660
22057-1016X0700	22057-1025X0700	22057-1032X0700	70	700
22057-1016X0730	22057-1025X0730	22057-1032X0730	73	730
22057-1016X0780	22057-1025X0780	22057-1032X0780	78	780
22057-1016X0800	22057-1025X0800	22057-1032X0800	80	800
22057-1016X0840	22057-1025X0840	22057-1032X0840	84	840
22057-1016X0890	22057-1025X0890	22057-1032X0890	89	890
22057-1016X0920	22057-1025X0920	22057-1032X0920	92	920
22057-1016X0960	22057-1025X0960	22057-1032X0960	96	960
22057-1016X0980	22057-1025X0980	22057-1032X0980	98	980
22057-1016X1010	22057-1025X1010	22057-1032X1010	101	1010
22057-1016X1050	22057-1025X1050	22057-1032X1050	105	1050
22057-1016X1080	22057-1025X1080	22057-1032X1080	108	1080
22057-1016X1150	22057-1025X1150	22057-1032X1150	115	1150
22057-1016X1210	22057-1025X1210	22057-1032X1210	121	1210
22057-1016X1250	22057-1025X1250	22057-1032X1250	125	1250
22057-1016X1320	22057-1025X1320	22057-1032X1320	132	1320
22057-1016X1400	22057-1025X1400	22057-1032X1400	140	1400
22057-1016X1500	22057-1025X1500	22057-1032X1500	150	1500
22057-1016X1600	22057-1025X1600	22057-1032X1600	160	1600
22057-1016X1700	22057-1025X1700	22057-1032X1700	170	1700
22057-1016X1800	22057-1025X1800	22057-1032X1800	180	1800

Toothed belts by the meter

AT profile

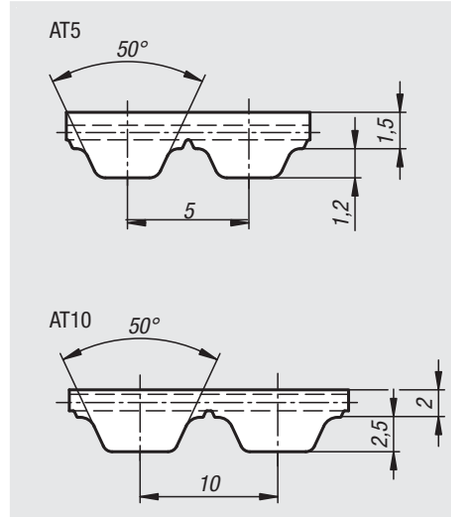

Material:
Polyurethane (PU) with steel cord reinforcement.

Sample order:
nlm 22059-0510X0500
(include length L)

Note:
Toothed belt with trapezoidal profile and reinforced steel cord (compared to T-Series). Optimised tooth profile for more uniform force distribution and lower tooth deformation under load. High-performance steel cord reinforcement for high breaking strength and low belt extension. Reduced polygon effect for quieter belt operation. Especially well-suited for linear drives and low power transmission where exact axial and angular positioning are required. Polyurethane belts may be welded. The power transmission rating of welded belts drops by about 50%.

Width tolerance: ±0.5 mm
Thickness tolerance: ±0.2 mm

On request:
Other lengths.
AT5 pitch in 5 mm length increases.
AT10 pitch in 10 mm length increases.
Maximum belt length 100 metres.

Order No.	Profile	Belt width	Tension max. N	Length	matching clamp plate
22059-0510X	AT5	10	640	500/1000/1500/2000/2500/3000/3500/4000/5000	22012-05102
22059-0516X	AT5	16	1120	500/1000/1500/2000/2500/3000/3500/4000/5000	22012-05162
22059-0525X	AT5	25	1840	500/1000/1500/2000/2500/3000/3500/4000/5000	22012-05252
22059-1016X	AT10	16	2450	500/1000/1500/2000/2500/3000/3500/4000/5000	22012-10162
22059-1025X	AT10	25	4170	500/1000/1500/2000/2500/3000/3500/4000/5000	22012-10252
22059-1032X	AT10	32	5390	500/1000/1500/2000/2500/3000/3500/4000/5000	22012-10322

Toothed belts by the meter

AT profile

Specific tooth force

The specific tooth force F_{Uspez} is the maximum force that a single engaged belt tooth 1 cm wide can transmit.
This force depends on the speed of the drive pulley. To calculate the transmissible longitudinal force F_U for the belt cross-section, the number z_e of engaged teeth is multiplied by the specific tooth force F_{Uspez} and the belt width b.

$$\mathbf{F_U = F_{Uspec} \bullet z_e \bullet b}$$

F_U = transmissible longitudinal force
F_{Uspec} = specific tooth force
z_e = number of engaged teeth
z_{emax} = for the calculation, perm. maximum number of engaged teeth = 12
b = belt width in cm

Pitch AT5

rpm	F_{Uspec} (N/cm)	rpm	F_{Uspec} (N/cm)	rpm	F_{Uspec} (N/cm)	rpm	F_{Uspec} (N/cm)
0	36,40	800	27,69	1900	22,73	4500	17,18
20	35,88	900	27,06	2000	22,42	5000	16,47
40	35,40	1000	26,49	2200	21,82	5500	15,83
60	34,97	1100	25,96	2400	21,28	6000	15,24
80	34,59	1200	25,47	2600	20,77	6500	14,69
100	34,24	1300	25,01	2800	20,29	7000	14,18
200	32,92	1400	24,57	3000	19,85	7500	13,71
300	31,92	1440	24,41	3200	19,43	8000	13,26
400	30,89	1500	24,16	3400	19,03	8500	12,85
500	29,95	1600	23,78	3600	18,66	9000	12,45
600	29,12	1700	23,41	3800	18,30	9500	12,07
700	28,37	1800	23,07	4000	17,96	10000	11,72

Pitch AT10

rpm	F_{Uspec} (N/cm)	rpm	F_{Uspec} (N/cm)	rpm	F_{Uspec} (N/cm)	rpm	F_{Uspec} (N/cm)
0	75,70	800	53,70	1900	42,02	4500	29,13
20	74,59	900	52,21	2000	41,28	5000	27,50
40	73,55	1000	50,85	2200	39,89	5500	26,01
60	72,57	1100	49,59	2400	38,62	6000	24,65
80	71,65	1200	48,43	2600	37,44	6500	23,40
100	70,78	1300	47,34	2800	36,33	7000	22,23
200	67,13	1400	46,32	3000	35,30	7500	21,14
300	64,18	1440	45,93	3200	34,33	8000	20,12
400	61,53	1500	45,36	3400	33,41	8500	19,15
500	59,21	1600	44,46	3600	32,55	9000	18,24
600	57,16	1700	43,60	3800	31,72	9500	17,38
700	55,34	1800	42,79	4000	30,94	10000	16,56

Toothed belt

profile HTD 5M

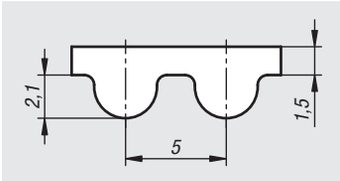

Material:
Belt back and belt teeth CR.
Tension cords Glascord.
Tooth covering mesh polyamide.

Sample order:
nlm 22062-0515X0275

Note:
Endless toothed belts with an arched profile as per ISO 13050 with metric pitch. The rounded shape of the tooth contour provides a particularly high degree of safety against incorrect tooth interlocking, combined with a very rounded tooth mesh.
Operating noise is significantly reduced by the rounded tooth mesh.
The toothed belts are robust, economical and versatile.

Temperature range:
From -20°C to +100°C

Features:
- Belt speed vmax perm. 50 m/s
- Transmissible power up to 8.42 kW
- Permissible speed up to 14000 rpm
- Low-noise and low-maintenance
- Very good chemical resistance, particularly against oils, greases and fuels
- Accurate positioning and angles

Order No. Belt width 15	Order No. Belt width 25	No. of teeth	Effective length
22062-0515X0275	22062-0525X0275	55	275
22062-0515X0300	22062-0525X0300	60	300
22062-0515X0330	22062-0525X0330	66	330
22062-0515X0350	22062-0525X0350	70	350
22062-0515X0375	22062-0525X0375	75	375
22062-0515X0385	22062-0525X0385	77	385
22062-0515X0400	22062-0525X0400	80	400
22062-0515X0425	22062-0525X0425	85	425
22062-0515X0450	22062-0525X0450	90	450
22062-0515X0460	22062-0525X0460	92	460
22062-0515X0475	22062-0525X0475	95	475
22062-0515X0500	22062-0525X0500	100	500
22062-0515X0535	22062-0525X0535	107	535
22062-0515X0550	22062-0525X0550	110	550
22062-0515X0565	22062-0525X0565	113	565
22062-0515X0600	22062-0525X0600	120	600
22062-0515X0615	22062-0525X0615	123	615
22062-0515X0620	22062-0525X0620	124	620
22062-0515X0630	22062-0525X0630	126	630
22062-0515X0635	22062-0525X0635	127	635
22062-0515X0665	22062-0525X0665	133	665
22062-0515X0700	22062-0525X0700	140	700
22062-0515X0710	22062-0525X0710	142	710
22062-0515X0740	22062-0525X0740	148	740
22062-0515X0755	22062-0525X0755	151	755
22062-0515X0800	22062-0525X0800	160	800
22062-0515X0835	22062-0525X0835	167	835
22062-0515X0840	22062-0525X0840	168	840
22062-0515X0860	22062-0525X0860	172	860
22062-0515X0890	22062-0525X0890	178	890
22062-0515X0900	22062-0525X0900	180	900
22062-0515X0925	22062-0525X0925	185	925
22062-0515X0950	22062-0525X0950	190	950
22062-0515X1000	22062-0525X1000	200	1000
22062-0515X1050	22062-0525X1050	210	1050
22062-0515X1125	22062-0525X1125	225	1125
22062-0515X1200	22062-0525X1200	240	1200
22062-0515X1270	22062-0525X1270	254	1270
22062-0515X1420	22062-0525X1420	284	1420
22062-0515X1500	22062-0525X1500	300	1500
22062-0515X1595	22062-0525X1595	319	1595
22062-0515X1690	22062-0525X1690	338	1690
22062-0515X1800	22062-0525X1800	360	1800
22062-0515X2000	22062-0525X2000	400	2000

Toothed belt

profile HTD 8M

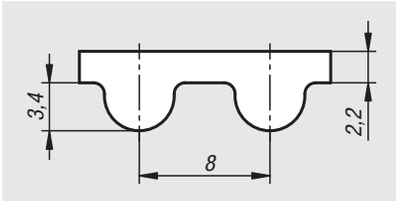

Material:
Belt back and belt teeth CR.
Tension cords Glascord.
Tooth covering mesh polyamide.

Sample order:
nlm 22062-0820X0288

Note:
Endless toothed belts with an arched profile as per ISO 13050 with metric pitch. The rounded shape of the tooth contour provides a particularly high degree of safety against incorrect tooth interlocking, combined with a very rounded tooth mesh.
Operating noise is significantly reduced by the rounded tooth mesh.
The toothed belts are robust, economical and versatile.

Temperature range:
From -20°C to +100°C

Features:
- Belt speed vmax perm. 50 m/s
- Transmissible power up to 99.1 kW
- Permissible speed up to 6000 rpm
- Low-noise and low-maintenance
- Very good chemical resistance, particularly against oils, greases and fuels
- Accurate positioning and angles

Order No. Belt width 20	Order No. Belt width 30	Order No. Belt width 50	No. of teeth	Effective length
22062-0820X0288	22062-0830X0288	22062-0850X0288	36	288
22062-0820X0304	22062-0830X0304	22062-0850X0304	38	304
22062-0820X0352	22062-0830X0352	22062-0850X0352	44	352
22062-0820X0376	22062-0830X0376	22062-0850X0376	47	376
22062-0820X0400	22062-0830X0400	22062-0850X0400	50	400
22062-0820X0416	22062-0830X0416	22062-0850X0416	52	416
22062-0820X0424	22062-0830X0424	22062-0850X0424	53	424
22062-0820X0480	22062-0830X0480	22062-0850X0480	60	480
22062-0820X0560	22062-0830X0560	22062-0850X0560	70	560
22062-0820X0600	22062-0830X0600	22062-0850X0600	75	600
22062-0820X0640	22062-0830X0640	22062-0850X0640	80	640
22062-0820X0656	22062-0830X0656	22062-0850X0656	82	656
22062-0820X0688	22062-0830X0688	22062-0850X0688	86	688
22062-0820X0720	22062-0830X0720	22062-0850X0720	90	720
22062-0820X0784	22062-0830X0784	22062-0850X0784	98	784
22062-0820X0800	22062-0830X0800	22062-0850X0800	100	800
22062-0820X0880	22062-0830X0880	22062-0850X0880	110	880
22062-0820X0920	22062-0830X0920	22062-0850X0920	115	920
22062-0820X0960	22062-0830X0960	22062-0850X0960	120	960
22062-0820X1040	22062-0830X1040	22062-0850X1040	130	1040
22062-0820X1120	22062-0830X1120	22062-0850X1120	140	1120
22062-0820X1160	22062-0830X1160	22062-0850X1160	145	1160
22062-0820X1200	22062-0830X1200	22062-0850X1200	150	1200
22062-0820X1280	22062-0830X1280	22062-0850X1280	160	1280
22062-0820X1304	22062-0830X1304	22062-0850X1304	163	1304
22062-0820X1360	22062-0830X1360	22062-0850X1360	170	1360
22062-0820X1424	22062-0830X1424	22062-0850X1424	178	1424
22062-0820X1440	22062-0830X1440	22062-0850X1440	180	1440
22062-0820X1520	22062-0830X1520	22062-0850X1520	190	1520
22062-0820X1600	22062-0830X1600	22062-0850X1600	200	1600
22062-0820X1760	22062-0830X1760	22062-0850X1760	220	1760
22062-0820X1800	22062-0830X1800	22062-0850X1800	225	1800
22062-0820X2000	22062-0830X2000	22062-0850X2000	250	2000
22062-0820X2248	22062-0830X2248	22062-0850X2248	281	2248
22062-0820X2400	22062-0830X2400	22062-0850X2400	300	2400
22062-0820X2600	22062-0830X2600	22062-0850X2600	325	2600
22062-0820X2800	22062-0830X2800	22062-0850X2800	350	2800
22062-0820X3008	22062-0830X3008	22062-0850X3008	376	3008
22062-0820X3280	22062-0830X3280	22062-0850X3280	410	3280
22062-0820X3408	22062-0830X3408	22062-0850X3408	426	3408
22062-0820X3808	22062-0830X3808	22062-0850X3808	476	3808

Belt tension meter

Sample order:
nlm 22100-01

Note:
The tension meter is used to perform a pre-tension test on commercially available belt systems quickly and easily by means of frequency measurement. Fully electronic and equipped with state-of-the-art microprocessor technology, the meter enables precise adjustment of all V, toothed and flat belts that have to be tensioned in the range from 10 to 600 Hz.

Attention:
- The measurement must never be performed while the drive is running
- The meter is not permitted or certified for use in potentially explosive areas.

Technical data:
- Measuring range: 10–600 Hz
- Measurement accuracy: 10–400 Hz ± 1% / >400 Hz ± 2%
- Resolution: 10–99.9 Hz: 0.1 Hz / >100 Hz: 1 Hz
- Measurement method: contact-free (acoustic with electronic interference noise suppression)
- Power supply: 2 x 1.5 V Micro (AAA cells)
- Operating time: >48 h permanent measurement (depending on the quality of the batteries used). Automatic shut down after 2 minutes of non-use
- Current consumption: max. 12 mA
- Indicator: - dual-row LCD, 2 x 8 characters

Order No.	Description
22100-01	belt tension meter

Line laser

Sample order:
nlm 22101-01

Note:
The line laser is a measuring device for aligning drive pulleys laterally, horizontally and vertically using a laser beam, preventing heavy wear to the edges of the belt.

Attention:
- Never look directly into the laser beam and do not point it at other people, animals or strongly reflective surfaces.
- The device and the target points contain high-powered magnets.
- Individuals with pacemakers should not use the device due to safety reasons. Keep a safe distance away from electronic devices and wristwatches in order to prevent interference.
- The device must not be used in potentially explosive areas.

Technical data:
- Laser beam range approx. 5 to 10 m
- Laser class 2 (EN 60825-1:1997)
- Wavelength 630–680 mm
- Power < 1 mW
- Power supply 2 x 1.5 V (LR44)

Order No.	Description
22101-01	line laser

Technical information for roller chains

By steel link chains, roller chains have the greatest significance and the widest application possibilities. They are primarily used as drive chains but also as transport, conveyor and hoist chains. They offer positive and non-slip power transmission. As a result, constant transmission ratios are possible. The roller chains work without pre-tension. This means that bearings are only subjected to low loads. The direction of rotation always remains the same for a two sprocket chain drive. For a chain drive with more than two sprockets, economic solutions for the same or differing rotation directions can be easily solved. Chain speeds of 20 m/s and more are possible. With good lubrication, under normal operating conditions and at full load the efficiency of a chain drive is ca. 98% .

Mounting instructions:

The power to be transmitted, the speed of the smallest sprocket and the operating conditions must be known for correct chain selection. Where possible, sprockets with at least 17 teeth should be selected. At high speeds and high loads, the small sprocket should have at least 21 teeth and be hardened. The following numbers of teeth are recommended: 17, 19, 21, 23, 25, 38, 57, 76, 95 and 114. The distance between shafts can be freely selected. A value between 30 and 60 times the chain pitch is recommended. The chain should however have a wrap angle of at least 120° on the small sprocket. A ratio up to 4:1 per stage is usual for chain drives (a maximum of 7:1 should not be exceeded). The transmission ratio can be simply altered by exchanging the sprockets while maintaining the distance between the shafts.

The sprockets must be aligned and the shafts must be parallel. To ensure simple installation, place the connecting links on the sprocket. The chain slack should be between 1 and 2% of the shaft centre distance. The chains stretch while running due to wear; a method of tensioning the chain should be provided for this purpose. If the chains stretches too much (> 3%), the chain, and if necessary the sprockets should be replaced.

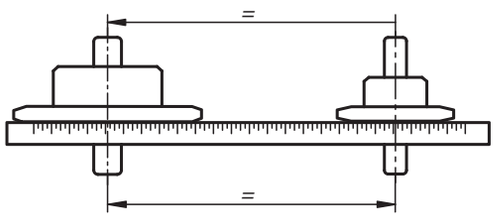

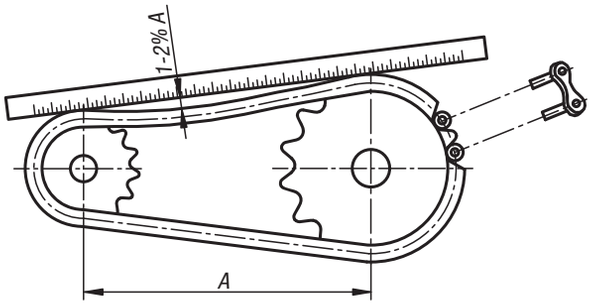

Maintenance and lubrication:

Regular maintenance of the chains is important in order to achieve a maximum service life. Our chains are supplied with corrosion protection and must be lubricated before commissioning. For a correctly dimensioned chain drive with suitable lubrication and maintenance, the service life is approx. 15,000 hours.

The type of lubrication is dependent on the power to be transmitted, the chain speed and the operating conditions. Highly viscous oil and greases are too thick to penetrate the chain and should be avoided. For roller chains, lubricants are used that are suitable for common lubricating methods such as manual lubrication, drip lubrication, submersion lubrication in an oil bath, force-feed lubrication or spray lubrication. Depending on the operating temperature, lubricating oils with SAE viscosity classes of between 30 and 50 should be used.

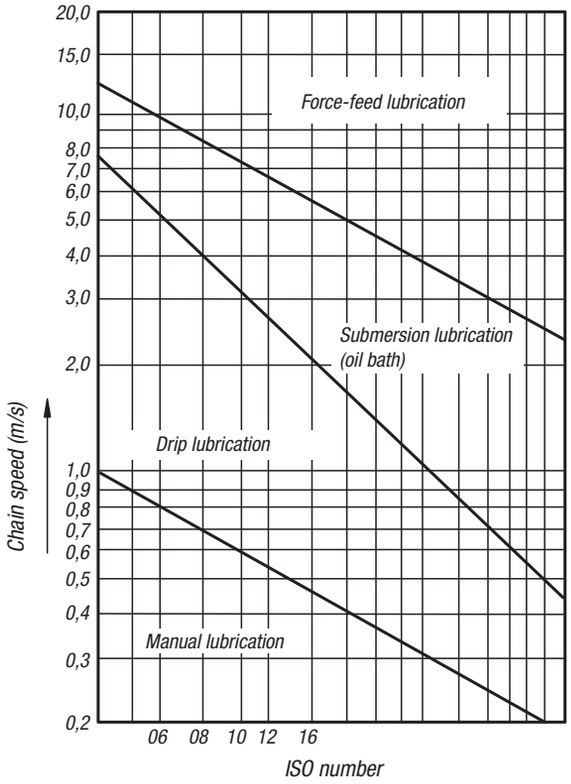

Ambient temperature:

-5°C to +25°C SAE 30
over +25°C to +45°C SAE 40
over +45°C to +65°C SAE 50

Technical information for roller chains

Calculation of chain drives with 2 sprockets

$P_1 = P_N * K_1 * K_2$

P_1 = corrected power (kW)
P_N = power to be transmitted (kW)
K_1 = factor for operating conditions

Running mode (examples)	*Transmission ratio*	*Factor K1 for operating conditions No. of teeth on the small wheel z1*							
	i = n1/n2 = z2/z1	*11*	*13*	*15*	*17*	*19*	*21*	*23*	*25*
Drive without shocks and normal power	*1:1*	**2,22*	**1,85*	*1,59*	*1,39*	*1,22*	*1,10*	*0,99*	*0,91*
Conveyors, generators, packaging machines, saws, centrifugal pumps, printing machines, escalators	*2:1*	**1,97*	*1,64*	*1,41*	*1,23*	*1,08*	*0,97*	*0,88*	*0,80*
	3:1	*1,82*	*1,52*	*1,30*	*1,14*	*1,00*	*0,90*	*0,81*	*0,74*
	5:1	*1,68*	*1,40*	*1,20*	*1,05*	*0,92*	*0,83*	*0,75*	*0,68*
Smooth drive with occasional slight shocks, normal to medium load	*1:1*	**2,78*	**2,32*	*1,98*	*1,74*	*1,53*	*1,38*	*1,24*	*1,13*
Blowers, rotary dryers, continuous conveyors, cellulose machines, agitators for solids, bending machines, winches, weaving looms, knitting machines	*2:1*	**2,46*	**2,05*	*1,76*	*1,55*	*1,35*	*1,22*	*1,10*	*1,05*
	3:1	**2,28*	*1,90*	*1,63*	*1,43*	*1,25*	*1,13*	*1,02*	*0,93*
	5:1	*2,10*	*1,75*	*1,50*	*1,31*	*1,15*	*1,04*	*0,93*	*0,85*
Slight shocks, medium load	*1:1*	**3,33*	**2,79*	*2,38*	*2,09*	*1,83*	*1,65*	*1,49*	*1,36*
Piston pumps, compressors, broaching machines, mills, mixing machines	*2:1*	**2,95*	**2,47*	*2,11*	*1,85*	*1,62*	*1,46*	*1,31*	*1,20*
	3:1	**2,73*	*2,28*	*1,95*	*1,71*	*1,50*	*1,35*	*1,22*	*1,11*
	5:1	**2,52*	*2,10*	*1,80*	*1,58*	*1,38*	*1,25*	*1,12*	*1,03*
Moderate shocks, heavy pulsating load	*1:1*	**3,89*	**3,25*	**2,78*	*2,44*	*2,14*	*1,92*	*1,73*	*1,58*
Planers, windlass, presses, compressors, mining machinery, stamping machines	*2:1*	**3,44*	**2,87*	*2,46*	*2,16*	*1,89*	*1,70*	*1,53*	*1,40*
	3:1	**3,19*	**2,66*	*2,28*	*2,00*	*1,75*	*1,58*	*1,42*	*1,30*
	5:1	**2,93*	**2,45*	*2,09*	*1,84*	*1,16*	*1,45*	*1,31*	*1,19*
Heavy shocks, alternating loads	*1:1*	**4,44*	**3,71*	**3,17*	**2,78*	*2,44*	*2,20*	*1,98*	*1,81*
Excavators, crushers, calender rollers, pile drivers, brickwork machinery, hammer mills, construction machinery	*2:1*	**3,93*	**3,28*	**2,81*	*2,46*	*2,16*	*1,95*	*1,75*	*1,60*
	3:1	**3,64*	**3,04*	*2,60*	*2,28*	*2,00*	*1,80*	*1,62*	*1,48*
	5:1	**3,35*	**2,80*	*2,39*	*2,10*	*1,84*	*1,66*	*1,49*	*1,36*

** Conditions for preventing slack*

For electric motors and smooth-running drive units.
For combustion engines and other non-smooth running drive types the factor increases by 0.5.

Power diagram for DIN ISO 606 roller chains

For chain drives with 19 teeth, a chain length of 100 links, a ratio of 1:3 and a life expectancy of 15,000 operating hours.

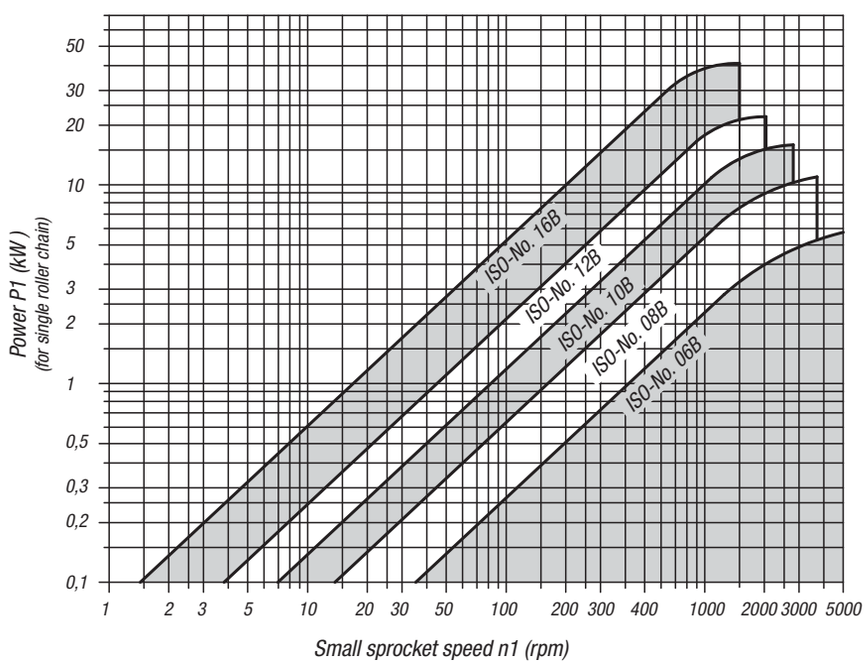

The power diagram is not binding. It assumes operation under optimum conditions and is based on empirical values.

Roller chains single

DIN ISO 606, curved link plate

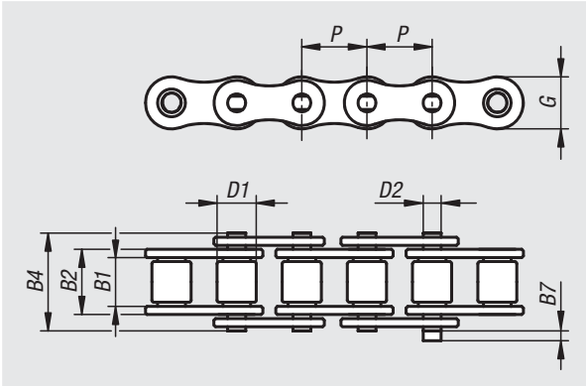

Material:
Steel.

Version:
Pre-stretched.

Sample order:
nlm 22200-0380732525

Note for ordering:
Packaging unit: 5 metres with odd number of links. Ending with an inner link at both ends. Connecting links must be ordered separately.

Note:
European-type roller chains acc. to DIN ISO 606 with curved link plates (ISO No. 06 with straight links). All chains are pre-stretched. Initial lubrication: anti-corrosion mineral based oil.
B7 = maximum value for links.
Pitch = PxB1

Temperature range:
-20°C to +120°C.

Order No.	ISO No.	Pitch inch	Pitch mm	B2	B4	B7	D1	D2	G	~L	No. of links	Break force F min. kN
22200-0380732525	06 B-1	3/8 x 7/32	9,525 x 5,72	8,53	13.5	3,3	6,35	3,28	8,26	5000	525	6,6
22200-0120516393	08 B-1	1/2 x 5/16	12,7 x 7,75	11,3	17	3,9	8,51	4,45	11,81	5000	393	12
22200-0580308315	10 B-1	5/8 x 3/8	15,875 x 9,65	13,28	19,6	4,1	10,16	5,08	14,73	5000	315	15
22200-0340716263	12 B-1	3/4 x 7/16	19,05 x 11,68	15,62	22,7	4,6	12,07	5,72	16,13	5000	263	17
22200-1001702197	16 B-1	1 x 17,02mm	25,4 x 17,02	25,45	36,1	5,4	15,88	8,28	21,08	5000	197	40

Links

DIN ISO 606

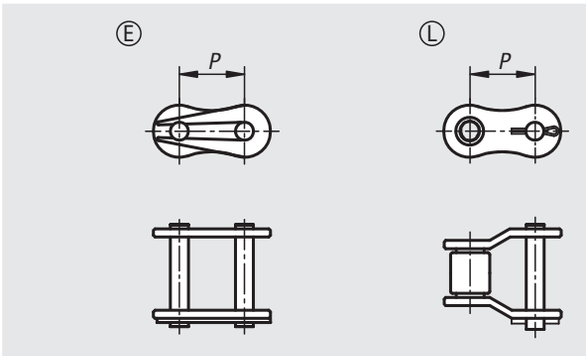

Material:
Steel.

Sample order:
nlm 22200-30380732

Note:
Links for single roller chains acc. to DIN ISO 606.

With Form E, the spring clips must be mounted with the closed end pointing in the direction of travel.

Offset links are required to close the chain if there is an odd number of links. Using offset links reduces the power and tensile strength by 20%.

Form E connecting links

Order No.	ISO No.	P	Suitable for chain sprockets
22200-30380732	06 B-1	9,525	3/8 x 7/32
22200-30120516	08 B-1	12,7	1/2 x 5/16
22200-30580308	10 B-1	15.875	5/8 x 3/8
22200-30340716	12 B-1	19,05	3/4 x 7/16
22200-31001702	16 B-1	25,4	1 x 17,02 mm

Form L offset links

Order No.	ISO No.	P	Suitable for chain sprockets
22200-40380732	06 B-1	9,525	3/8 x 7/32
22200-40120516	08 B-1	12,7	1/2 x 5/16
22200-40580308	10 B-1	15.875	5/8 x 3/8
22200-40340716	12 B-1	19,05	3/4 x 7/16
22200-41001702	16 B-1	25,4	1 x 17,02 mm

Roller chains single

DIN ISO 606, straight link plate

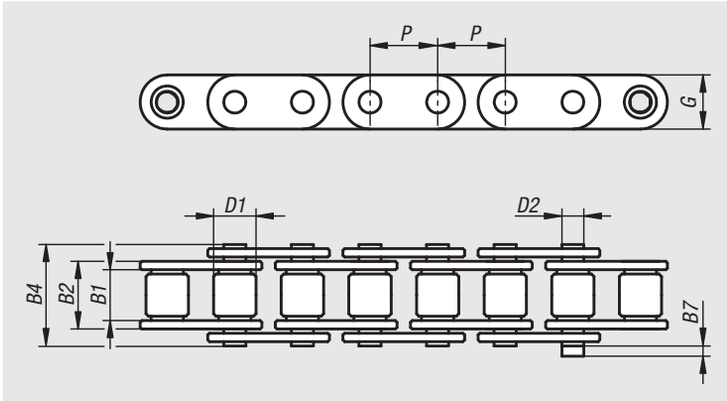

Material:
Steel.

Version:
Pre-stretched.

Sample order:
nlm 22208-0120516393

Note for ordering:
Packaging unit: 5 metres with odd number of links. Ending with an inner link at both ends. Connecting links must be ordered separately.

Note:
European-type roller chains acc. to DIN ISO 606 with straight link plates.
All chains are pre-stretched.
Initial lubrication: anti-corrosion mineral based oil.
B7 = maximum value for links.
Pitch = PxB1

Temperature range:
-20°C to +120°C.

Order No.	ISO No.	Pitch inch	Pitch mm	B2	B4	B7	D1	D2	G	~L	No. of links	Break force F min. kN
22208-0120516393	08 B-1	1/2 x 5/16	12,7 x 7,75	11,3	17	1,5	8,51	4,45	11,8	5000	393	18
22208-0580308315	10 B-1	5/8 x 3/8	15,875 x 9,65	13,28	19,6	2,4	10,16	5,08	14,7	5000	315	22,4
22208-0340716263	12 B-1	3/4 x 7/16	19,05 x 11,68	15,62	22,7	2,7	12,07	5,72	16	5000	263	29
22208-1001702197	16 B-1	1 x 17,02mm	25,4 x 17,02	25,45	36,1	3	15,88	8,28	21	5000	197	60

Links

DIN ISO 606

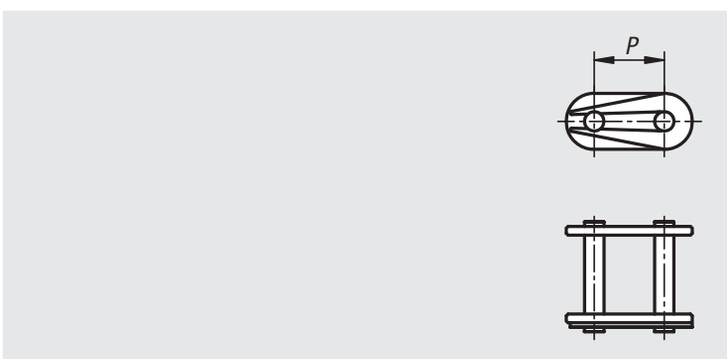

Material:
Steel.

Sample order:
nlm 22208-30120516

Note:
Links for single roller chains acc. to DIN ISO 606.

The spring clips must be mounted with the closed end pointing in the direction of travel.

Order No.	ISO No.	P	Suitable for chain sprockets
22208-30120516	08 B-1	12,7	1/2 x 5/16
22208-30580308	10 B-1	15.875	5/8 x 3/8
22208-30340716	12 B-1	19,05	3/4 x 7/16
22208-31001702	16 B-1	25,4	1 x 17,02 mm

Roller chains single stainless steel

DIN ISO 606, curved link plate

Material:
Stainless steel 1.4301.

Version:
Pre-stretched.

Sample order:
nlm 22212-0380732525

Note for ordering:
Packaging unit: 5 metres with odd number of links. Ending with an inner link at both ends. Connecting links must be ordered separately.

Note:
European-type DIN ISO 606 roller chains with curved link plates (ISO No. 06 with straight links). All chains are pre-stretched. Not lubricated, the chains must be lubricated depending on the application.
The stainless steel roller chains offer excellent corrosion protection and good chemical resistance. They can be used in applications with water and at high temperatures.

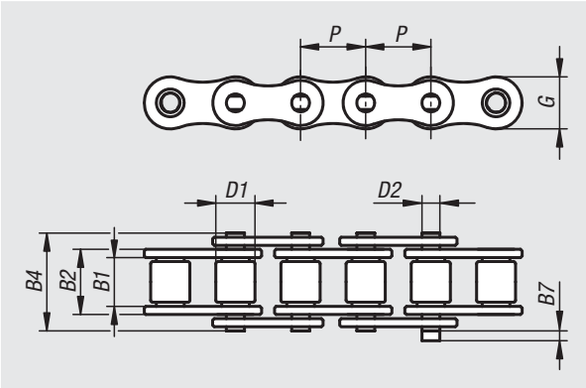

B7 = maximum value for links.
Pitch = PxB1

Temperature range:
-20°C to +400°C.

Order No.	ISO No.	Pitch inch	Pitch mm	B2	B4	B7	D1	D2	G	~L	No. of links	Break force F min. kN
22212-0380732525	06 B-1	3/8 x 7/32	9,525 x 5,72	8,53	13.5	3,3	6,35	3,28	8,26	5000	525	6,6
22212-0120516393	08 B-1	1/2 x 5/16	12,7 x 7,75	11,3	17	3,9	8,51	4,45	11,81	5000	393	12
22212-0580308315	10 B-1	5/8 x 3/8	15,875 x 9,65	13,28	19,6	4,1	10,16	5,08	14,73	5000	315	15
22212-0340716263	12 B-1	3/4 x 7/16	19,05 x 11,68	15,62	22,7	4,6	12,07	5,72	16,13	5000	263	17
22212-1001702197	16 B-1	1 x 17,02mm	25,4 x 17,02	25,45	36,1	5,4	15,88	8,28	21,08	5000	197	40

Links stainless steel

DIN ISO 606

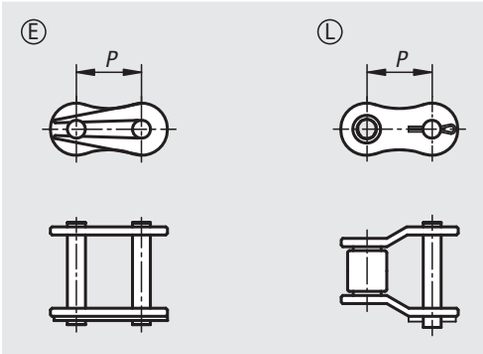

Material:
Stainless steel 1.4301.

Sample order:
nlm 22212-30380732

Note:
Links for single roller chains acc. to DIN ISO 606.

With Form E, the spring clips must be mounted with the closed end pointing in the direction of travel.

Offset links are required to close the chain if there is an odd number of links. Using offset links reduces the power and tensile strength by 20%.

Form E connecting links

Order No.	ISO No.	P	Suitable for chain sprockets
22212-30380732	06 B-1	9,525	3/8 x 7/32
22212-30120516	08 B-1	12,7	1/2 x 5/16
22212-30580308	10 B-1	15.875	5/8 x 3/8
22212-30340716	12 B-1	19,05	3/4 x 7/16
22212-31001702	16 B-1	25,4	1 x 17,02 mm

Form L offset links

Order No.	ISO No.	P	Suitable for chain sprockets
22212-40380732	06 B-1	9,525	3/8 x 7/32
22212-40120516	08 B-1	12,7	1/2 x 5/16
22212-40580308	10 B-1	15.875	5/8 x 3/8
22212-40340716	12 B-1	19,05	3/4 x 7/16
22212-41001702	16 B-1	25,4	1 x 17,02 mm

Notes

Sprockets single 3/8“ x 7/32“

DIN ISO 606, ready to install

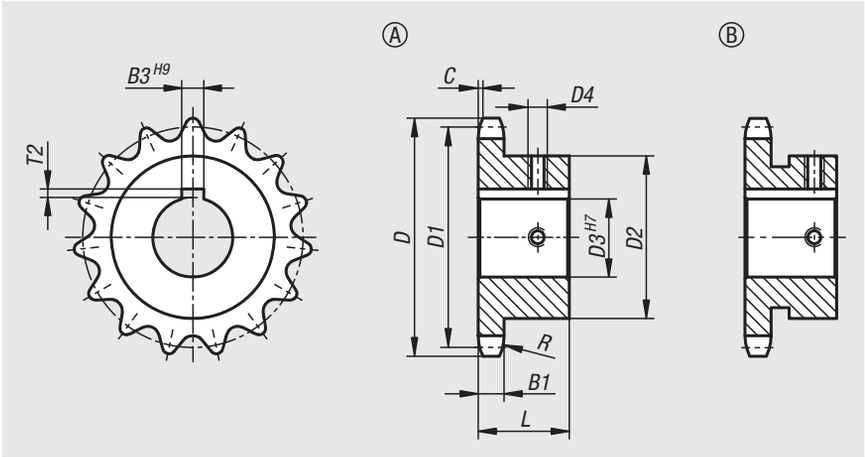

Material:
Steel C45.

Version:
Bright.
Teeth inductively hardened ~HRC 50.

Sample order:
nlm 22250-1038073201010

Note:
Ready to install sprockets with hub on one side for DIN ISO 606 roller chains. Teeth are milled and inductively hardened.
Keyway acc. to DIN 6885 / BS 4235. The keyway is aligned with the tooth tip.
With two grub screws. One tapped hole aligned with the keyway centre, the other offset by 90°.

Order No.	ISO No.	Pitch inch	Pitch mm	R	C	B1
22250	06 B-1	3/8 x 7/32	9,525 x 5,72	10	1	5,3

Order No.	Form	No. of teeth	D	D1	D2	D3	D4	B3	L	T2
22250-1038073201010	B	10	34,5	30,82	24	10	M4	3	20	1,4
22250-1038073201012	B				26	12	M4	4	20	1,8
22250-1038073201014	B				29	14	M4	5	20	2,3
22250-1038073201110	B	11	37,5	33,8	24	10	M4	3	25	1,4
22250-1038073201112	B				26	12	M4	4	25	1,8
22250-1038073201114	B				29	14	M4	5	25	2,3
22250-1038073201115	B				30	15	M4	5	25	2,3
22250-1038073201116	B				31	16	M4	5	25	2,3
22250-1038073201210	A	12	40,5	36,8	25	10	M4	3	25	1,4
22250-1038073201212	B				26	12	M4	4	25	1,8
22250-1038073201214	B				29	14	M4	5	25	2,3
22250-1038073201215	B				30	15	M4	5	25	2,3
22250-1038073201216	B				31	16	M4	5	25	2,3
22250-1038073201312	A	13	43,5	39,8	28	12	M4	4	25	1,8
22250-1038073201314	A				28	14	M4	5	25	2,3
22250-1038073201310	A				28	10	M4	3	25	1,4
22250-1038073201315	A				28	15	M4	5	25	2,3
22250-1038073201316	B				31	16	M4	5	25	2,3
22250-1038073201318	B				34	18	M5	6	25	2,8
22250-1038073201418	A	14	46,5	42,8	31	18	M5	6	25	2,8

Order No.	Form	No. of teeth	D	D1	D2	D3	D4	B3	L	T2
22250-1038073201412	A				31	12	M4	4	25	1,8
22250-1038073201416	A				31	16	M4	5	25	2,3
22250-1038073201410	A				31	10	M4	3	25	1,4
22250-1038073201415	A				31	15	M4	5	25	2,3
22250-1038073201414	A				31	14	M4	5	25	2,3
22250-1038073201419	B				35	19	M5	6	25	2,8
22250-1038073201515	A	15	49,5	45,81	34	15	M4	5	25	2,3
22250-1038073201516	A				34	16	M4	5	25	2,3
22250-1038073201518	A				34	18	M5	6	25	2,8
22250-1038073201519	A				34	19	M5	6	25	2,8
22250-1038073201512	A				34	12	M4	4	25	1,8
22250-1038073201520	A				34	20	M5	6	25	2,8
22250-1038073201514	A				34	14	M4	5	25	2,3
22250-1038073201525	B				42	25	M6	8	25	3,3
22250-1038073201522	B				42	22	M5	6	25	2,8
22250-1038073201524	B				42	24	M6	8	25	3,3
22250-1038073201616	A	16	52,5	48,82	37	16	M4	5	28	2,3
22250-1038073201612	A				37	12	M4	4	28	1,8
22250-1038073201618	A				37	18	M5	6	28	2,8
22250-1038073201614	A				37	14	M4	5	28	2,3

Sprockets single 3/8“ x 7/32“

DIN ISO 606, ready to install

Order No.	Form	No. of teeth	D	D1	D2	D3	D4	B3	L	T2
22250-1038073201619	A				37	19	M5	6	28	2,8
22250-1038073201620	A				37	20	M5	6	28	2,8
22250-1038073201622	A				37	22	M5	6	28	2,8
22250-1038073201615	A				37	15	M4	5	28	2,3
22250-1038073201624	B				42	24	M6	8	28	3,3
22250-1038073201625	B				42	25	M6	8	28	3,3
22250-1038073201716	A	17	55,5	51,83	40	16	M4	5	28	2,3
22250-1038073201718	A				40	18	M5	6	28	2,8
22250-1038073201719	A				40	19	M5	6	28	2,8
22250-1038073201720	A				40	20	M5	6	28	2,8
22250-1038073201722	A				40	22	M5	6	28	2,8
22250-1038073201712	A				40	12	M4	4	28	1,8
22250-1038073201715	A				40	15	M4	5	28	2,3
22250-1038073201714	A				40	14	M4	5	28	2,3
22250-1038073201724	B				46	24	M6	8	28	3,3
22250-1038073201725	B				46	25	M6	8	28	3,3
22250-1038073201814	A	18	58,6	54,85	40	14	M4	5	28	2,3
22250-1038073201812	A				40	12	M4	4	28	1,8
22250-1038073201824	A				43	24	M6	8	28	3,3
22250-1038073201816	A				43	16	M4	5	28	2,3
22250-1038073201825	A				43	25	M6	8	28	3,3
22250-1038073201818	A				43	18	M5	6	28	2,8
22250-1038073201819	A				43	19	M5	6	28	2,8
22250-1038073201820	A				43	20	M5	6	28	2,8
22250-1038073201822	A				43	22	M5	6	28	2,8
22250-1038073201815	A				43	15	M4	5	28	2,3
22250-1038073201912	A	19	61,6	57,87	40	12	M4	4	28	1,8
22250-1038073201914	A				40	14	M4	5	28	2,3
22250-1038073201916	A				45	16	M4	5	28	2,3
22250-1038073201915	A				45	15	M4	5	28	2,3
22250-1038073201918	A				45	18	M5	6	28	2,8
22250-1038073201925	A				45	25	M6	8	28	3,3
22250-1038073201919	A				45	19	M5	6	28	2,8
22250-1038073201920	A				45	20	M5	6	28	2,8
22250-1038073201922	A				45	22	M5	6	28	2,8
22250-1038073201924	A				45	24	M6	8	28	3,3
22250-1038073202014	A	20	64,6	60,89	40	14	M4	5	28	2,3
22250-1038073202012	A				40	12	M4	4	28	1,8
22250-1038073202016	A				46	16	M4	5	28	2,3
22250-1038073202018	A				46	18	M5	6	28	2,8
22250-1038073202015	A				46	15	M4	5	28	2,3
22250-1038073202019	A				46	19	M5	6	28	2,8
22250-1038073202025	A				46	25	M6	8	28	3,3
22250-1038073202020	A				46	20	M5	6	28	2,8
22250-1038073202022	A				46	22	M5	6	28	2,8
22250-1038073202024	A				46	24	M6	8	28	3,3
22250-1038073202122	A	21	67,6	63,91	48	22	M5	6	28	2,8
22250-1038073202124	A				48	24	M6	8	28	3,3
22250-1038073202125	A				48	25	M6	8	28	3,3
22250-1038073202115	A				48	15	M4	5	28	2,3
22250-1038073202118	A				48	18	M5	6	28	2,8
22250-1038073202116	A				48	16	M4	5	28	2,3
22250-1038073202119	A				48	19	M5	6	28	2,8
22250-1038073202120	A				48	20	M5	6	28	2,8
22250-1038073202216	A	22	70,6	66,93	50	16	M4	5	28	2,3
22250-1038073202218	A				50	18	M5	6	28	2,8
22250-1038073202215	A				50	15	M4	5	28	2,3
22250-1038073202219	A				50	19	M5	6	28	2,8
22250-1038073202225	A				50	25	M6	8	28	3,3
22250-1038073202220	A				50	20	M5	6	28	2,8
22250-1038073202222	A				50	22	M5	6	28	2,8
22250-1038073202224	A				50	24	M6	8	28	3,3
22250-1038073202315	A	23	73,7	69,95	50	15	M4	5	28	2,3
22250-1038073202316	A				50	16	M4	5	28	2,3
22250-1038073202319	A				52	19	M5	6	28	2,8
22250-1038073202320	A				52	20	M5	6	28	2,8
22250-1038073202318	A				52	18	M5	6	28	2,8
22250-1038073202322	A				52	22	M5	6	28	2,8
22250-1038073202325	A				52	25	M6	8	28	3,3
22250-1038073202324	A				52	24	M6	8	28	3,3
22250-1038073202418	A	24	76,7	72,97	50	18	M5	6	28	2,8
22250-1038073202416	A				50	16	M4	5	28	2,3
22250-1038073202425	A				54	25	M6	8	28	3,3
22250-1038073202422	A				54	22	M5	6	28	2,8
22250-1038073202430	A				54	30	M6	8	28	3,3
22250-1038073202420	A				54	20	M5	6	28	2,8
22250-1038073202419	A				54	19	M5	6	28	2,8
22250-1038073202428	A				54	28	M6	8	28	3,3
22250-1038073202424	A				54	24	M6	8	28	3,3
22250-1038073202516	A	25	79,7	76	50	16	M4	5	28	2,3
22250-1038073202518	A				50	18	M5	6	28	2,8
22250-1038073202519	A				50	19	M5	6	28	2,8
22250-1038073202528	A				57	28	M6	8	28	3,3
22250-1038073202525	A				57	25	M6	8	28	3,3
22250-1038073202524	A				57	24	M6	8	28	3,3
22250-1038073202530	A				57	30	M6	8	28	3,3
22250-1038073202522	A				57	22	M5	6	28	2,8
22250-1038073202520	A				57	20	M5	6	28	2,8
22250-1038073203022	A	30	94,8	91,12	60	22	M5	6	30	2,8
22250-1038073203020	A				60	20	M5	6	30	2,8
22250-1038073203024	A				60	24	M6	8	30	3,3
22250-1038073203030	A				60	30	M6	8	30	3,3
22250-1038073203025	A				60	25	M6	8	30	3,3
22250-1038073203028	A				60	28	M6	8	30	3,3

Sprockets single 1/2" x 5/16"

DIN ISO 606, ready to install

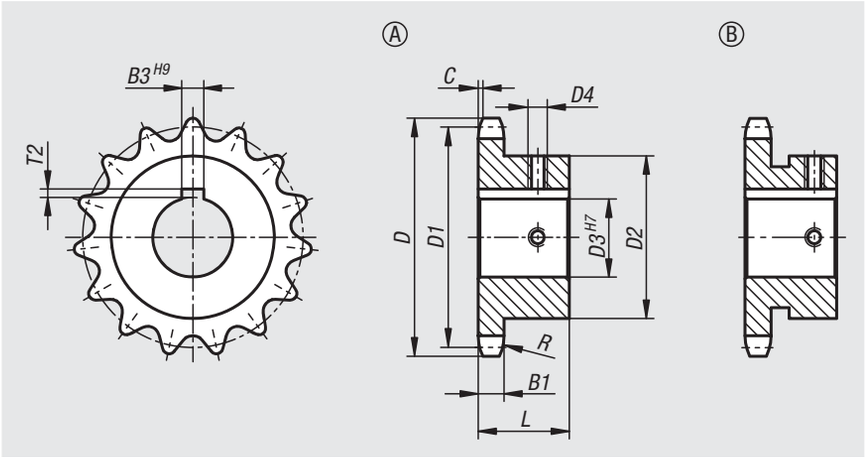

Material:
Steel C45.

Version:
Bright.
Teeth inductively hardened ~HRC 50.

Sample order:
nlm 22250-1012051601012

Note:
Ready to install sprockets with hub on one side for DIN ISO 606 roller chains. Teeth are milled and inductively hardened.
Keyway acc. to DIN 6885 / BS 4235. The keyway is aligned with the tooth tip.
With two grub screws. One tapped hole aligned with the keyway centre, the other offset by 90°.

Order No.	ISO No.	Pitch inch	Pitch mm	R	C	B1
22250	08 B-1	1/2 x 5/16	12,7 x 7,75	13	1,3	7,2

Order No.	Form	No. of teeth	D	D1	D2	D3	D4	B3	L	T2
22250-1012051601012	A	10	45,9	41,1	26	12	M4	4	25	1,8
22250-1012051601014	A				26	14	M4	5	25	2,3
22250-1012051601015	B				31	15	M4	5	25	2,3
22250-1012051601016	B				31	16	M4	5	25	2,3
22250-1012051601114	A	11	49,9	45,07	29	14	M4	5	25	2,3
22250-1012051601112	A				29	12	M4	4	25	1,8
22250-1012051601115	B				31	15	M4	5	25	2,3
22250-1012051601116	B				31	16	M4	5	25	2,3
22250-1012051601119	B				37	19	M5	6	25	2,8
22250-1012051601118	B				37	18	M5	6	25	2,8
22250-1012051601220	A	12	53,9	49,07	33	20	M5	6	28	2,8
22250-1012051601214	A				33	14	M4	5	28	2,3
22250-1012051601215	A				33	15	M4	5	28	2,3
22250-1012051601216	A				33	16	M4	5	28	2,3
22250-1012051601218	A				33	18	M5	6	28	2,8
22250-1012051601219	A				33	19	M5	6	28	2,8
22250-1012051601212	A				33	12	M4	4	28	1,8
22250-1012051601222	B				40	22	M5	6	28	2,8
22250-1012051601224	B				41	24	M6	8	28	3,3
22250-1012051601225	B				42	25	M6	8	28	3,3

Order No.	Form	No. of teeth	D	D1	D2	D3	D4	B3	L	T2
22250-1012051601314	A	13	57,9	56,06	33	14	M4	5	28	2,3
22250-1012051601312	A				33	12	M4	4	28	1,8
22250-1012051601319	A				37	19	M5	6	28	2,8
22250-1012051601316	A				37	16	M4	5	28	2,3
22250-1012051601320	A				37	20	M5	6	28	2,8
22250-1012051601322	A				37	22	M5	6	28	2,8
22250-1012051601318	A				37	18	M5	6	28	2,8
22250-1012051601315	A				37	15	M4	5	28	2,3
22250-1012051601324	B				42	24	M6	8	28	3,3
22250-1012051601325	B				42	25	M6	8	28	3,3
22250-1012051601328	B				45	28	M6	8	28	3,3
22250-1012051601414	A	14	61,9	57,07	37	14	M4	5	28	2,3
22250-1012051601412	A				37	12	M4	4	28	1,8
22250-1012051601419	A				41	19	M5	6	28	2,8
22250-1012051601420	A				41	20	M5	6	28	2,8
22250-1012051601422	A				41	22	M5	6	28	2,8
22250-1012051601424	A				41	24	M6	8	28	3,3
22250-1012051601425	A				41	25	M6	8	28	3,3
22250-1012051601415	A				41	15	M4	5	28	2,3
22250-1012051601416	A				41	16	M4	5	28	2,3

Sprockets single 1/2" x 5/16"

DIN ISO 606, ready to install

Order No.	Form	No. of teeth	D	D1	D2	D3	D4	B3	L	T2
22250-1012051601418	A				41	18	M5	6	28	2,8
22250-1012051601428	B				48	28	M6	8	28	3,3
22250-1012051601514	A	15	65,9	61,09	37	14	M4	5	28	2,3
22250-1012051601512	A				37	12	M4	4	28	1,8
22250-1012051601519	A				45	19	M5	6	28	2,8
22250-1012051601520	A				45	20	M5	6	28	2,8
22250-1012051601522	A				45	22	M5	6	28	2,8
22250-1012051601524	A				45	24	M6	8	28	3,3
22250-1012051601525	A				45	25	M6	8	28	3,3
22250-1012051601528	A				45	28	M6	8	28	3,3
22250-1012051601516	A				45	16	M4	5	28	2,3
22250-1012051601515	A				45	15	M4	5	28	2,3
22250-1012051601518	A				45	18	M5	6	28	2,8
22250-1012051601532	B				52	32	M8	10	28	3,3
22250-1012051601530	B				52	30	M6	8	28	3,3
22250-1012051601624	A	16	69,9	65,1	50	24	M6	8	28	3,3
22250-1012051601622	A				50	22	M5	6	28	2,8
22250-1012051601620	A				50	20	M5	6	28	2,8
22250-1012051601630	A				50	30	M6	8	28	3,3
22250-1012051601619	A				50	19	M5	6	28	2,8
22250-1012051601628	A				50	28	M6	8	28	3,3
22250-1012051601618	A				50	18	M5	6	28	2,8
22250-1012051601616	A				50	16	M4	5	28	2,3
22250-1012051601615	A				50	15	M4	5	28	2,3
22250-1012051601625	A				50	25	M6	8	28	3,3
22250-1012051601632	B				57	32	M8	10	28	3,3
22250-1012051601720	A	17	74	69,11	52	20	M5	6	28	2,8
22250-1012051601722	A				52	22	M5	6	28	2,8
22250-1012051601724	A				52	24	M6	8	28	3,3
22250-1012051601725	A				52	25	M6	8	28	3,3
22250-1012051601728	A				52	28	M6	8	28	3,3
22250-1012051601730	A				52	30	M6	8	28	3,3
22250-1012051601732	A				52	32	M8	10	28	3,3
22250-1012051601715	A				52	15	M4	5	28	2,3
22250-1012051601716	A				52	16	M4	5	28	2,3
22250-1012051601718	A				52	18	M5	6	28	2,8
22250-1012051601719	A				52	19	M5	6	28	2,8
22250-1012051601816	A	18	78	73,14	52	16	M4	5	28	2,3
22250-1012051601818	A				52	18	M5	6	28	2,8
22250-1012051601819	A				52	19	M5	6	28	2,8
22250-1012051601822	A				56	22	M5	6	28	2,8
22250-1012051601820	A				56	20	M5	6	28	2,8
22250-1012051601824	A				56	24	M6	8	28	3,3
22250-1012051601835	A				56	35	M8	10	28	3,3
22250-1012051601825	A				56	25	M6	8	28	3,3
22250-1012051601828	A				56	28	M6	8	28	3,3
22250-1012051601830	A				56	30	M6	8	28	3,3
22250-1012051601832	A				56	32	M8	10	28	3,3

Order No.	Form	No. of teeth	D	D1	D2	D3	D4	B3	L	T2
22250-1012051601838	A				56	38	M8	10	28	3,3
22250-1012051601918	A	19	82	77,16	52	18	M5	6	28	2,8
22250-1012051601919	A				52	19	M5	6	28	2,8
22250-1012051601916	A				52	16	M4	5	28	2,3
22250-1012051601938	A				60	38	M8	10	28	3,3
22250-1012051601935	A				60	35	M8	10	28	3,3
22250-1012051601932	A				60	32	M8	10	28	3,3
22250-1012051601920	A				60	20	M5	6	28	2,8
22250-1012051601930	A				60	30	M6	8	28	3,3
22250-1012051601922	A				60	22	M5	6	28	2,8
22250-1012051601928	A				60	28	M6	8	28	3,3
22250-1012051601925	A				60	25	M6	8	28	3,3
22250-1012051601924	A				60	24	M6	8	28	3,3
22250-1012051602018	A	20	86	81,19	55	18	M5	6	28	2,8
22250-1012051602016	A				55	16	M4	5	28	2,3
22250-1012051602019	A				55	19	M5	6	28	2,8
22250-1012051602025	A				64	25	M6	8	28	3,3
22250-1012051602020	A				64	20	M5	6	28	2,8
22250-1012051602022	A				64	22	M5	6	28	2,8
22250-1012051602038	A				64	38	M8	10	28	3,3
22250-1012051602035	A				64	35	M8	10	28	3,3
22250-1012051602024	A				64	24	M6	8	28	3,3
22250-1012051602032	A				64	32	M8	10	28	3,3
22250-1012051602028	A				64	28	M6	8	28	3,3
22250-1012051602030	A				64	30	M6	8	28	3,3
22250-1012051602119	A	21	90,1	85,22	55	19	M5	6	28	2,8
22250-1012051602118	A				55	18	M5	6	28	2,8
22250-1012051602116	A				55	16	M4	5	28	2,3
22250-1012051602120	A				60	20	M5	6	28	2,8
22250-1012051602122	A				60	22	M5	6	28	2,8
22250-1012051602124	A				68	24	M6	8	28	3,3
22250-1012051602135	A				68	35	M8	10	28	3,3
22250-1012051602132	A				68	32	M8	10	28	3,3
22250-1012051602130	A				68	30	M6	8	28	3,3
22250-1012051602128	A				68	28	M6	8	28	3,3
22250-1012051602125	A				68	25	M6	8	28	3,3
22250-1012051602138	A				68	38	M8	10	28	3,3
22250-1012051602218	A	22	94,1	89,24	55	18	M5	6	28	2,8
22250-1012051602216	A				55	16	M4	5	28	2,3
22250-1012051602219	A				55	19	M5	6	28	2,8
22250-1012051602220	A				65	20	M5	6	28	2,8
22250-1012051602222	A				65	22	M5	6	28	2,8
22250-1012051602230	A				70	30	M6	8	28	3,3
22250-1012051602232	A				70	32	M8	10	28	3,3
22250-1012051602235	A				70	35	M8	10	28	3,3
22250-1012051602224	A				70	24	M6	8	28	3,3
22250-1012051602238	A				70	38	M8	10	28	3,3
22250-1012051602225	A				70	25	M6	8	28	3,3

Sprockets single 1/2“ x 5/16“

DIN ISO 606, ready to install

Order No.	Form	No. of teeth	D	D1	D2	D3	D4	B3	L	T2
22250-1012051602228	A				70	28	M6	8	28	3,3
22250-1012051602320	A	23	98,1	93,27	65	20	M5	6	28	2,8
22250-1012051602319	A				65	19	M5	6	28	2,8
22250-1012051602338	A				70	38	M8	10	28	3,3
22250-1012051602325	A				70	25	M6	8	28	3,3
22250-1012051602322	A				70	22	M5	6	28	2,8
22250-1012051602328	A				70	28	M6	8	28	3,3
22250-1012051602324	A				70	24	M6	8	28	3,3
22250-1012051602330	A				70	30	M6	8	28	3,3
22250-1012051602332	A				70	32	M8	10	28	3,3
22250-1012051602335	A				70	35	M8	10	28	3,3
22250-1012051602420	A	24	102,1	97,29	65	20	M5	6	28	2,8
22250-1012051602419	A				65	19	M5	6	28	2,8
22250-1012051602438	A				70	38	M8	10	28	3,3
22250-1012051602425	A				70	25	M6	8	28	3,3
22250-1012051602428	A				70	28	M6	8	28	3,3
22250-1012051602430	A				70	30	M6	8	28	3,3
22250-1012051602422	A				70	22	M5	6	28	2,8
22250-1012051602432	A				70	32	M8	10	28	3,3
22250-1012051602424	A				70	24	M6	8	28	3,3
22250-1012051602435	A				70	35	M8	10	28	3,3
22250-1012051602519	A	25	106,2	101,33	65	19	M5	6	28	2,8
22250-1012051602520	A				65	20	M5	6	28	2,8
22250-1012051602530	A				70	30	M6	8	28	3,3
22250-1012051602528	A				70	28	M6	8	28	3,3
22250-1012051602525	A				70	25	M6	8	28	3,3
22250-1012051602538	A				70	38	M8	10	28	3,3
22250-1012051602524	A				70	24	M6	8	28	3,3
22250-1012051602535	A				70	35	M8	10	28	3,3
22250-1012051602522	A				70	22	M5	6	28	2,8
22250-1012051602532	A				70	32	M8	10	28	3,3
22250-1012051603028	A	30	126,3	121,5	75	28	M6	8	30	3,3
22250-1012051603025	A				75	25	M6	8	30	3,3
22250-1012051603030	A				80	30	M6	8	30	3,3
22250-1012051603032	A				80	32	M8	10	30	3,3
22250-1012051603035	A				80	35	M8	10	30	3,3
22250-1012051603038	A				80	38	M8	10	30	3,3

norelem

Sprockets single 5/8“ x 3/8“

DIN ISO 606, ready to install

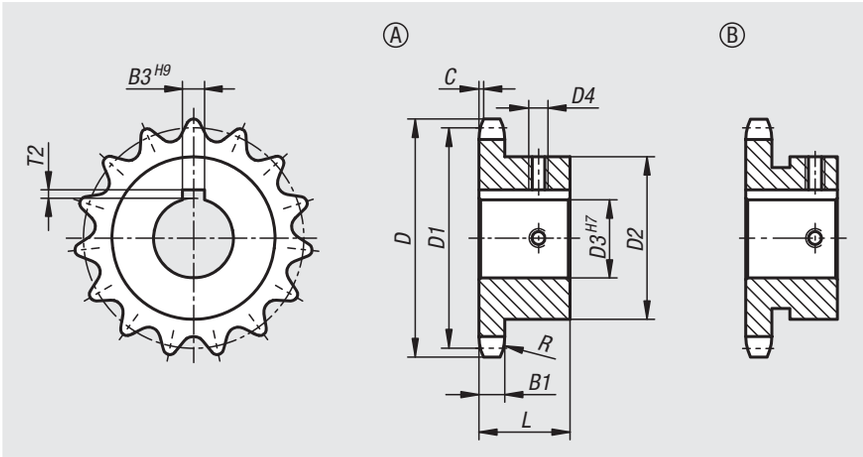

Material:
Steel C45.

Version:
Bright.
Teeth inductively hardened ~HRC 50.

Sample order:
nlm 22250-1058030801015

Note:
Ready to install sprockets with hub on one side for DIN ISO 606 roller chains. Teeth are milled and inductively hardened. Keyway acc. to DIN 6885 / BS 4235. The keyway is aligned with the tooth tip.
With two grub screws. One tapped hole aligned with the keyway centre, the other offset by 90°.

Order No.	ISO No.	Pitch inch	Pitch mm	R	C	B1
22250	10 B-1	5/8 x 3/8	15,875 x 9,65	16	1,6	9,1

Order No.	Form	No. of teeth	D	D1	D2	D3	D4	B3	L	T2
22250-1058030801016	A	10	58,3	51,37	35	16	M4	5	25	2,3
22250-1058030801015	A				35	15	M4	5	25	2,3
22250-1058030801018	A				35	18	M5	6	25	2,8
22250-1058030801020	A				35	20	M5	6	25	2,8
22250-1058030801019	A				35	19	M5	6	25	2,8
22250-1058030801024	B				42	24	M6	8	25	3,3
22250-1058030801116	A	11	63,2	56,34	37	16	M4	5	30	2,3
22250-1058030801115	A				37	15	M4	5	30	2,3
22250-1058030801118	A				37	18	M5	6	30	2,8
22250-1058030801119	A				37	19	M5	6	30	2,8
22250-1058030801120	A				37	20	M5	6	30	2,8
22250-1058030801124	B				47	24	M6	8	30	3,3
22250-1058030801125	B				47	25	M6	8	30	3,3
22250-1058030801128	B				47	28	M6	8	30	3,3
22250-1058030801219	A	12	68,2	61,34	42	19	M5	6	30	2,8
22250-1058030801220	A				42	20	M5	6	30	2,8
22250-1058030801222	A				42	22	M5	6	30	2,8
22250-1058030801224	A				42	24	M6	8	30	3,3
22250-1058030801225	A				42	25	M6	8	30	3,3
22250-1058030801215	A				42	15	M4	5	30	2,3

Order No.	Form	No. of teeth	D	D1	D2	D3	D4	B3	L	T2
22250-1058030801218	A				42	18	M5	6	30	2,8
22250-1058030801216	A				42	16	M4	5	30	2,3
22250-1058030801228	B				51	28	M6	8	30	3,3
22250-1058030801230	B				51	30	M6	8	30	3,3
22250-1058030801232	B				55	32	M8	10	30	3,3
22250-1058030801324	A	13	73,2	66,32	47	24	M6	8	30	3,3
22250-1058030801325	A				47	25	M6	8	30	3,3
22250-1058030801328	A				47	28	M6	8	30	3,3
22250-1058030801330	A				47	30	M6	8	30	3,3
22250-1058030801318	A				47	18	M5	6	30	2,8
22250-1058030801319	A				47	19	M5	6	30	2,8
22250-1058030801320	A				47	20	M5	6	30	2,8
22250-1058030801315	A				47	15	M4	5	30	2,3
22250-1058030801322	A				47	22	M5	6	30	2,8
22250-1058030801316	A				47	16	M4	5	30	2,3
22250-1058030801332	B				57	32	M8	10	30	3,3
22250-1058030801430	A	14	78,2	71,34	52	30	M6	8	30	3,3
22250-1058030801432	A				52	32	M8	10	30	3,3
22250-1058030801424	A				52	24	M6	8	30	3,3
22250-1058030801425	A				52	25	M6	8	30	3,3

Sprockets single 5/8“ x 3/8“

DIN ISO 606, ready to install

Order No.	Form	No. of teeth	D	D1	D2	D3	D4	B3	L	T2
22250-1058030801422	A				52	22	M5	6	30	2,8
22250-1058030801428	A				52	28	M6	8	30	3,3
22250-1058030801420	A				52	20	M5	6	30	2,8
22250-1058030801419	A				52	19	M5	6	30	2,8
22250-1058030801418	A				52	18	M5	6	30	2,8
22250-1058030801416	A				52	16	M4	5	30	2,3
22250-1058030801415	A				52	15	M4	5	30	2,3
22250-1058030801532	A	15	83,2	76,36	57	32	M8	10	30	3,3
22250-1058030801535	A				57	35	M8	10	30	3,3
22250-1058030801522	A				57	22	M5	6	30	2,8
22250-1058030801524	A				57	24	M6	8	30	3,3
22250-1058030801525	A				57	25	M6	8	30	3,3
22250-1058030801519	A				57	19	M5	6	30	2,8
22250-1058030801528	A				57	28	M6	8	30	3,3
22250-1058030801520	A				57	20	M5	6	30	2,8
22250-1058030801530	A				57	30	M6	8	30	3,3
22250-1058030801638	A	16	88,3	81,37	60	38	M8	10	30	3,3
22250-1058030801624	A				60	24	M6	8	30	3,3
22250-1058030801625	A				60	25	M6	8	30	3,3
22250-1058030801635	A				60	35	M8	10	30	3,3
22250-1058030801628	A				60	28	M6	8	30	3,3
22250-1058030801630	A				60	30	M6	8	30	3,3
22250-1058030801619	A				60	19	M5	6	30	2,8
22250-1058030801620	A				60	20	M5	6	30	2,8
22250-1058030801622	A				60	22	M5	6	30	2,8
22250-1058030801632	A				60	32	M8	10	30	3,3
22250-1058030801735	A	17	93,3	86,39	60	35	M8	10	30	3,3
22250-1058030801720	A				60	20	M5	6	30	2,8
22250-1058030801738	A				60	38	M8	10	30	3,3
22250-1058030801722	A				60	22	M5	6	30	2,8
22250-1058030801724	A				60	24	M6	8	30	3,3
22250-1058030801725	A				60	25	M6	8	30	3,3
22250-1058030801728	A				60	28	M6	8	30	3,3
22250-1058030801730	A				60	30	M6	8	30	3,3
22250-1058030801732	A				60	32	M8	10	30	3,3
22250-1058030801719	A				60	19	M5	6	30	2,8
22250-1058030801820	A	18	98,3	91,42	60	20	M5	6	30	2,8
22250-1058030801819	A				60	19	M5	6	30	2,8
22250-1058030801838	A				70	38	M8	10	30	3,3
22250-1058030801840	A				70	40	M10	12	30	3,3
22250-1058030801842	A				70	42	M10	12	30	3,3
22250-1058030801822	A				70	22	M5	6	30	2,8
22250-1058030801825	A				70	25	M6	8	30	3,3
22250-1058030801824	A				70	24	M6	8	30	3,3
22250-1058030801828	A				70	28	M6	8	30	3,3
22250-1058030801830	A				70	30	M6	8	30	3,3
22250-1058030801832	A				70	32	M8	10	30	3,3
22250-1058030801835	A				70	35	M8	10	30	3,3

Order No.	Form	No. of teeth	D	D1	D2	D3	D4	B3	L	T2
22250-1058030801920	A	19	103,3	96,45	60	20	M5	6	30	2,8
22250-1058030801919	A				60	19	M5	6	30	2,8
22250-1058030801938	A				70	38	M8	10	30	3,3
22250-1058030801940	A				70	40	M10	12	30	3,3
22250-1058030801942	A				70	42	M10	12	30	3,3
22250-1058030801925	A				70	25	M6	8	30	3,3
22250-1058030801922	A				70	22	M5	6	30	2,8
22250-1058030801928	A				70	28	M6	8	30	3,3
22250-1058030801924	A				70	24	M6	8	30	3,3
22250-1058030801930	A				70	30	M6	8	30	3,3
22250-1058030801932	A				70	32	M8	10	30	3,3
22250-1058030801935	A				70	35	M8	10	30	3,3
22250-1058030802019	A	20	108,4	101,49	65	19	M5	6	30	2,8
22250-1058030802022	A				65	22	M5	6	30	2,8
22250-1058030802020	A				65	20	M5	6	30	2,8
22250-1058030802025	A				70	25	M6	8	30	3,3
22250-1058030802024	A				70	24	M6	8	30	3,3
22250-1058030802035	A				75	35	M8	10	30	3,3
22250-1058030802032	A				75	32	M8	10	30	3,3
22250-1058030802042	A				75	42	M10	12	30	3,3
22250-1058030802030	A				75	30	M6	8	30	3,3
22250-1058030802040	A				75	40	M10	12	30	3,3
22250-1058030802028	A				75	28	M6	8	30	3,3
22250-1058030802038	A				75	38	M8	10	30	3,3
22250-1058030802120	A	21	113,4	106,52	65	20	M5	6	30	2,8
22250-1058030802122	A				65	22	M5	6	30	2,8
22250-1058030802119	A				65	19	M5	6	30	2,8
22250-1058030802124	A				70	24	M6	8	30	3,3
22250-1058030802125	A				70	25	M6	8	30	3,3
22250-1058030802132	A				75	32	M8	10	30	3,3
22250-1058030802135	A				75	35	M8	10	30	3,3
22250-1058030802128	A				75	28	M6	8	30	3,3
22250-1058030802138	A				75	38	M8	10	30	3,3
22250-1058030802130	A				75	30	M6	8	30	3,3
22250-1058030802140	A				75	40	M10	12	30	3,3
22250-1058030802142	A				75	42	M10	12	30	3,3
22250-1058030802222	A	22	118,4	111,55	65	22	M5	6	30	2,8
22250-1058030802220	A				65	20	M5	6	30	2,8
22250-1058030802219	A				65	19	M5	6	30	2,8
22250-1058030802224	A				70	24	M6	8	30	3,3
22250-1058030802225	A				70	25	M6	8	30	3,3
22250-1058030802240	A				80	40	M10	12	30	3,3
22250-1058030802238	A				80	38	M8	10	30	3,3
22250-1058030802235	A				80	35	M8	10	30	3,3
22250-1058030802232	A				80	32	M8	10	30	3,3
22250-1058030802230	A				80	30	M6	8	30	3,3
22250-1058030802242	A				80	42	M10	12	30	3,3
22250-1058030802228	A				80	28	M6	8	30	3,3

norelem

Sprockets single 5/8“ x 3/8“

DIN ISO 606, ready to install

Order No.	Form	No. of teeth	D	D1	D2	D3	D4	B3	L	T2
22250-1058030802322	A	23	123,5	116,58	65	22	M5	6	30	2,8
22250-1058030802319	A				65	19	M5	6	30	2,8
22250-1058030802320	A				65	20	M5	6	30	2,8
22250-1058030802324	A				70	24	M6	8	30	3,3
22250-1058030802325	A				70	25	M6	8	30	3,3
22250-1058030802328	A				80	28	M6	8	30	3,3
22250-1058030802332	A				80	32	M8	10	30	3,3
22250-1058030802330	A				80	30	M6	8	30	3,3
22250-1058030802335	A				80	35	M8	10	30	3,3
22250-1058030802338	A				80	38	M8	10	30	3,3
22250-1058030802340	A				80	40	M10	12	30	3,3
22250-1058030802342	A				80	42	M10	12	30	3,3
22250-1058030802419	A	24	128,5	121,62	65	19	M5	6	30	2,8
22250-1058030802420	A				65	20	M5	6	30	2,8
22250-1058030802422	A				65	22	M5	6	30	2,8
22250-1058030802424	A				70	24	M6	8	30	3,3
22250-1058030802425	A				70	25	M6	8	30	3,3
22250-1058030802432	A				80	32	M8	10	30	3,3
22250-1058030802438	A				80	38	M8	10	30	3,3
22250-1058030802435	A				80	35	M8	10	30	3,3
22250-1058030802440	A				80	40	M10	12	30	3,3
22250-1058030802430	A				80	30	M6	8	30	3,3
22250-1058030802428	A				80	28	M6	8	30	3,3
22250-1058030802442	A				80	42	M10	12	30	3,3
22250-1058030802520	A	25	133,6	126,66	65	20	M5	6	30	2,8
22250-1058030802519	A				65	19	M5	6	30	2,8
22250-1058030802522	A				65	22	M5	6	30	2,8
22250-1058030802524	A				70	24	M6	8	30	3,3
22250-1058030802525	A				70	25	M6	8	30	3,3
22250-1058030802528	A				80	28	M6	8	30	3,3
22250-1058030802532	A				80	32	M8	10	30	3,3
22250-1058030802530	A				80	30	M6	8	30	3,3
22250-1058030802535	A				80	35	M8	10	30	3,3
22250-1058030802538	A				80	38	M8	10	30	3,3
22250-1058030802540	A				80	40	M10	12	30	3,3
22250-1058030802542	A				80	42	M10	12	30	3,3

Sprockets single 3/4“ x 7/16“

DIN ISO 606, ready to install

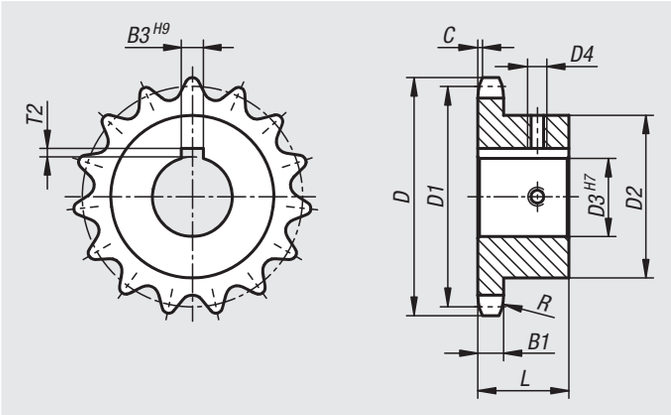

Material:
Steel C45.

Version:
Bright.
Teeth inductively hardened ~HRC 50.

Sample order:
nlm 22250-1034071601019

Note:
Ready to install sprockets with hub on one side for DIN ISO 606 roller chains.
Teeth are milled and inductively hardened.
Keyway acc. to DIN 6885 / BS 4235. The keyway is aligned with the tooth tip.
With two grub screws. One tapped hole aligned with the keyway centre, the other offset by 90°.

Order No.	ISO No.	Pitch inch	Pitch mm	R	C	B1
22250	12 B-1	3/4 x 7/16	19,05 x 11,68	19	2	11,1

Order No.	No. of teeth	D	D1	D2	D3	D4	B3	L	T2
22250-1034071601020	10	69,8	61,64	42	20	M5	6	30	2,8
22250-1034071601024				42	24	M6	8	30	3,3
22250-1034071601019				42	19	M5	6	30	2,8
22250-1034071601025				42	25	M6	8	30	3,3
22250-1034071601119	11	75,8	67,61	46	19	M5	6	35	2,8
22250-1034071601120				46	20	M5	6	35	2,8
22250-1034071601124				46	24	M6	8	35	3,3
22250-1034071601125				46	25	M6	8	35	3,3
22250-1034071601219	12	81,8	73,6	52	19	M5	6	35	2,8
22250-1034071601230				52	30	M6	8	35	3,3
22250-1034071601220				52	20	M5	6	35	2,8
22250-1034071601222				52	22	M5	6	35	2,8
22250-1034071601224				52	24	M6	8	35	3,3
22250-1034071601225				52	25	M6	8	35	3,3
22250-1034071601228				52	28	M6	8	35	3,3
22250-1034071601232				56	32	M8	10	35	3,3
22250-1034071601235				56	35	M8	10	35	3,3
22250-1034071601319	13	87,8	79,59	58	19	M5	6	35	2,8
22250-1034071601320				58	20	M5	6	35	2,8
22250-1034071601335				58	35	M8	10	35	3,3

Order No.	No. of teeth	D	D1	D2	D3	D4	B3	L	T2
22250-1034071601322				58	22	M5	6	35	2,8
22250-1034071601324				58	24	M6	8	35	3,3
22250-1034071601325				58	25	M6	8	35	3,3
22250-1034071601328				58	28	M6	8	35	3,3
22250-1034071601330				58	30	M6	8	35	3,3
22250-1034071601332				58	32	M8	10	35	3,3
22250-1034071601338				61	38	M8	10	35	3,3
22250-1034071601419	14	93,8	85,61	60	19	M5	6	35	2,8
22250-1034071601420				60	20	M5	6	35	2,8
22250-1034071601422				60	22	M5	6	35	2,8
22250-1034071601424				64	24	M6	8	35	3,3
22250-1034071601425				64	25	M6	8	35	3,3
22250-1034071601438				64	38	M8	10	35	3,3
22250-1034071601428				64	28	M6	8	35	3,3
22250-1034071601430				64	30	M6	8	35	3,3
22250-1034071601432				64	32	M8	10	35	3,3
22250-1034071601435				64	35	M8	10	35	3,3
22250-1034071601440				67	40	M10	12	35	3,3
22250-1034071601519	15	99,8	91,63	65	19	M5	6	35	2,8
22250-1034071601520				65	20	M5	6	35	2,8

Sprockets single 3/4“ x 7/16“

DIN ISO 606, ready to install

Order No.	No. of teeth	D	D1	D2	D3	D4	B3	L	T2
22250-1034071601522				65	22	M5	6	35	2,8
22250-1034071601525				70	25	M6	8	35	3,3
22250-1034071601528				70	28	M6	8	35	3,3
22250-1034071601530				70	30	M6	8	35	3,3
22250-1034071601524				70	24	M6	8	35	3,3
22250-1034071601532				70	32	M8	10	35	3,3
22250-1034071601540				70	40	M10	12	35	3,3
22250-1034071601535				70	35	M8	10	35	3,3
22250-1034071601538				70	38	M8	10	35	3,3
22250-1034071601619	16	105,8	97,65	65	19	M5	6	35	2,8
22250-1034071601620				65	20	M5	6	35	2,8
22250-1034071601622				65	22	M5	6	35	2,8
22250-1034071601624				70	24	M6	8	35	3,3
22250-1034071601625				70	25	M6	8	35	3,3
22250-1034071601630				75	30	M6	8	35	3,3
22250-1034071601628				75	28	M6	8	35	3,3
22250-1034071601632				75	32	M8	10	35	3,3
22250-1034071601640				75	40	M10	12	35	3,3
22250-1034071601635				75	35	M8	10	35	3,3
22250-1034071601638				75	38	M8	10	35	3,3
22250-1034071601725	17	111,9	103,67	70	25	M6	8	35	3,3
22250-1034071601730				80	30	M6	8	35	3,3
22250-1034071601732				80	32	M8	10	35	3,3
22250-1034071601735				80	35	M8	10	35	3,3
22250-1034071601738				80	38	M8	10	35	3,3
22250-1034071601740				80	40	M10	12	35	3,3
22250-1034071601728				80	28	M6	8	35	3,3
22250-1034071601742				80	42	M10	12	35	3,3
22250-1034071601825	18	117,9	109,71	70	25	M6	8	35	3,3
22250-1034071601830				80	30	M6	8	35	3,3
22250-1034071601828				80	28	M6	8	35	3,3
22250-1034071601832				80	32	M8	10	35	3,3
22250-1034071601842				80	42	M10	12	35	3,3
22250-1034071601835				80	35	M8	10	35	3,3
22250-1034071601838				80	38	M8	10	35	3,3
22250-1034071601840				80	40	M10	12	35	3,3
22250-1034071601925	19	123,9	115,75	70	25	M6	8	35	3,3
22250-1034071601930				80	30	M6	8	35	3,3
22250-1034071601932				80	32	M8	10	35	3,3
22250-1034071601935				80	35	M8	10	35	3,3
22250-1034071601938				80	38	M8	10	35	3,3
22250-1034071601928				80	28	M6	8	35	3,3
22250-1034071601940				80	40	M10	12	35	3,3
22250-1034071601950				80	50	M12	14	35	3,8
22250-1034071601942				80	42	M10	12	35	3,3
22250-1034071601945				80	45	M12	14	35	3,8
22250-1034071601948				80	48	M12	14	35	3,8
22250-1034071602025	20	130	121,78	70	25	M6	8	35	3,3

Order No.	No. of teeth	D	D1	D2	D3	D4	B3	L	T2
22250-1034071602030				80	30	M6	8	35	3,3
22250-1034071602032				80	32	M8	10	35	3,3
22250-1034071602035				80	35	M8	10	35	3,3
22250-1034071602038				80	38	M8	10	35	3,3
22250-1034071602040				80	40	M10	12	35	3,3
22250-1034071602028				80	28	M6	8	35	3,3
22250-1034071602042				80	42	M10	12	35	3,3
22250-1034071602050				80	50	M12	14	35	3,8
22250-1034071602045				80	45	M12	14	35	3,8
22250-1034071602048				80	48	M12	14	35	3,8
22250-1034071602125	21	136	127,82	70	25	M6	8	40	3,3
22250-1034071602128				80	28	M6	8	40	3,3
22250-1034071602130				80	30	M6	8	40	3,3
22250-1034071602135				90	35	M8	10	40	3,3
22250-1034071602138				90	38	M8	10	40	3,3
22250-1034071602132				90	32	M8	10	40	3,3
22250-1034071602140				90	40	M10	12	40	3,3
22250-1034071602150				90	50	M12	14	40	3,8
22250-1034071602142				90	42	M10	12	40	3,3
22250-1034071602145				90	45	M12	14	40	3,8
22250-1034071602148				90	48	M12	14	40	3,8
22250-1034071602225	22	142	133,86	70	25	M6	8	40	3,3
22250-1034071602228				80	28	M6	8	40	3,3
22250-1034071602230				80	30	M6	8	40	3,3
22250-1034071602235				90	35	M8	10	40	3,3
22250-1034071602232				90	32	M8	10	40	3,3
22250-1034071602238				90	38	M8	10	40	3,3
22250-1034071602250				90	50	M12	14	40	3,8
22250-1034071602240				90	40	M10	12	40	3,3
22250-1034071602242				90	42	M10	12	40	3,3
22250-1034071602245				90	45	M12	14	40	3,8
22250-1034071602248				90	48	M12	14	40	3,8
22250-1034071602325	23	148,1	139,9	70	25	M6	8	40	3,3
22250-1034071602328				80	28	M6	8	40	3,3
22250-1034071602330				80	30	M6	8	40	3,3
22250-1034071602335				90	35	M8	10	40	3,3
22250-1034071602338				90	38	M8	10	40	3,3
22250-1034071602332				90	32	M8	10	40	3,3
22250-1034071602340				90	40	M10	12	40	3,3
22250-1034071602350				90	50	M12	14	40	3,8
22250-1034071602342				90	42	M10	12	40	3,3
22250-1034071602345				90	45	M12	14	40	3,8
22250-1034071602348				90	48	M12	14	40	3,8
22250-1034071602425	24	154,1	145,94	70	25	M6	8	40	3,3
22250-1034071602428				80	28	M6	8	40	3,3
22250-1034071602430				80	30	M6	8	40	3,3
22250-1034071602435				90	35	M8	10	40	3,3
22250-1034071602432				90	32	M8	10	40	3,3

Sprockets single 3/4“ x 7/16“

DIN ISO 606, ready to install

Order No.	No. of teeth	D	D1	D2	D3	D4	B3	L	T2
22250-1034071602438				90	38	M8	10	40	3,3
22250-1034071602450				90	50	M12	14	40	3,8
22250-1034071602440				90	40	M10	12	40	3,3
22250-1034071602442				90	42	M10	12	40	3,3
22250-1034071602445				90	45	M12	14	40	3,8
22250-1034071602448				90	48	M12	14	40	3,8
22250-1034071602525	25	160,2	152	70	25	M6	8	40	3,3
22250-1034071602528				80	28	M6	8	40	3,3
22250-1034071602530				80	30	M6	8	40	3,3
22250-1034071602535				90	35	M8	10	40	3,3
22250-1034071602532				90	32	M8	10	40	3,3
22250-1034071602538				90	38	M8	10	40	3,3
22250-1034071602550				90	50	M12	14	40	3,8
22250-1034071602540				90	40	M10	12	40	3,3
22250-1034071602542				90	42	M10	12	40	3,3
22250-1034071602545				90	45	M12	14	40	3,8
22250-1034071602548				90	48	M12	14	40	3,8

Sprockets single 1“ x 17.02 mm

DIN ISO 606, ready to install

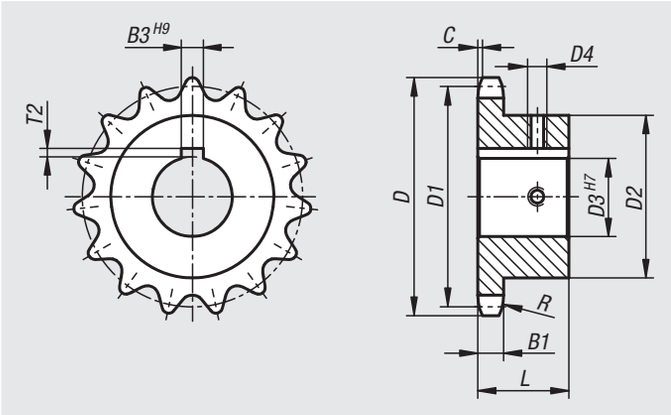

Material:
Steel C45.

Version:
Bright.
Teeth inductively hardened ~HRC 50.

Sample order:
nlm 22250-1100170201125

Note:
Ready to install sprockets with hub on one side for DIN ISO 606 roller chains.
Teeth are milled and inductively hardened.
Keyway acc. to DIN 6885 / BS 4235. The keyway is aligned with the tooth tip.
With two grub screws. One tapped hole aligned with the keyway centre, the other offset by 90°.

Order No.	ISO No.	Pitch inch	Pitch mm	R	C	B1
22250	16 B-1	1 x 17,02mm	25,4 x 17,02	26	2,5	16,2

Order No.	No. of teeth	D	D1	D2	D3	D4	B3	L	T2
22250-1100170201128	11	101,7	90,14	61	28	M6	8	40	3,3
22250-1100170201130				61	30	M6	8	40	3,3
22250-1100170201125				61	25	M6	8	40	3,3
22250-1100170201132				61	32	M8	10	40	3,3
22250-1100170201135				61	35	M8	10	40	3,3
22250-1100170201138				65	38	M8	10	40	3,3
22250-1100170201140				67	40	M10	12	40	3,3
22250-1100170201142				67	42	M10	12	40	3,3
22250-1100170201228	12	109,7	98,14	69	28	M6	8	40	3,3
22250-1100170201230				69	30	M6	8	40	3,3
22250-1100170201232				69	32	M8	10	40	3,3
22250-1100170201235				69	35	M8	10	40	3,3
22250-1100170201238				69	38	M8	10	40	3,3
22250-1100170201240				69	40	M10	12	40	3,3
22250-1100170201225				69	25	M6	8	40	3,3
22250-1100170201242				69	42	M10	12	40	3,3
22250-1100170201325	13	117,7	106,12	70	25	M6	8	40	3,3
22250-1100170201330				78	30	M6	8	40	3,3
22250-1100170201332				78	32	M8	10	40	3,3
22250-1100170201335				78	35	M8	10	40	3,3

Order No.	No. of teeth	D	D1	D2	D3	D4	B3	L	T2
22250-1100170201338				78	38	M8	10	40	3,3
22250-1100170201340				78	40	M10	12	40	3,3
22250-1100170201328				78	28	M6	8	40	3,3
22250-1100170201342				78	42	M10	12	40	3,3
22250-1100170201350				78	50	M12	14	40	3,8
22250-1100170201345				78	45	M12	14	40	3,8
22250-1100170201348				78	48	M12	14	40	3,8
22250-1100170201425	14	125,7	114,15	70	25	M6	8	40	3,3
22250-1100170201428				80	28	M6	8	40	3,3
22250-1100170201430				80	30	M6	8	40	3,3
22250-1100170201432				80	32	M8	10	40	3,3
22250-1100170201438				84	38	M8	10	40	3,3
22250-1100170201440				84	40	M10	12	40	3,3
22250-1100170201442				84	42	M10	12	40	3,3
22250-1100170201445				84	45	M12	14	40	3,8
22250-1100170201435				84	35	M8	10	40	3,3
22250-1100170201448				84	48	M12	14	40	3,8
22250-1100170201450				84	50	M12	14	40	3,8
22250-1100170201525	15	133,7	122,17	70	25	M6	8	40	3,3
22250-1100170201528				80	28	M6	8	40	3,3

Sprockets single 1“ x 17.02 mm

DIN ISO 606, ready to install

Order No.	No. of teeth	D	D1	D2	D3	D4	B3	L	T2
22250-1100170201530				80	30	M6	8	40	3,3
22250-1100170201532				80	32	M8	10	40	3,3
22250-1100170201538				92	38	M8	10	40	3,3
22250-1100170201535				92	35	M8	10	40	3,3
22250-1100170201540				92	40	M10	12	40	3,3
22250-1100170201550				92	50	M12	14	40	3,8
22250-1100170201542				92	42	M10	12	40	3,3
22250-1100170201545				92	45	M12	14	40	3,8
22250-1100170201548				92	48	M12	14	40	3,8
22250-1100170201625	16	141,8	130,2	80	25	M6	8	45	3,3
22250-1100170201628				80	28	M6	8	45	3,3
22250-1100170201630				80	30	M6	8	45	3,3
22250-1100170201635				100	35	M8	10	45	3,3
22250-1100170201638				100	38	M8	10	45	3,3
22250-1100170201632				100	32	M8	10	45	3,3
22250-1100170201640				100	40	M10	12	45	3,3
22250-1100170201650				100	50	M12	14	45	3,8
22250-1100170201642				100	42	M10	12	45	3,3
22250-1100170201645				100	45	M12	14	45	3,8
22250-1100170201648				100	48	M12	14	45	3,8
22250-1100170201725	17	149,8	138,22	80	25	M6	8	45	3,3
22250-1100170201728				80	28	M6	8	45	3,3
22250-1100170201730				80	30	M6	8	45	3,3
22250-1100170201735				100	35	M8	10	45	3,3
22250-1100170201738				100	38	M8	10	45	3,3
22250-1100170201732				100	32	M8	10	45	3,3
22250-1100170201740				100	40	M10	12	45	3,3
22250-1100170201750				100	50	M12	14	45	3,8
22250-1100170201742				100	42	M10	12	45	3,3
22250-1100170201745				100	45	M12	14	45	3,8
22250-1100170201748				100	48	M12	14	45	3,8
22250-1100170201825	18	157,8	146,28	80	25	M6	8	45	3,3
22250-1100170201828				80	28	M6	8	45	3,3
22250-1100170201830				80	30	M6	8	45	3,3
22250-1100170201835				100	35	M8	10	45	3,3
22250-1100170201838				100	38	M8	10	45	3,3
22250-1100170201840				100	40	M10	12	45	3,3
22250-1100170201842				100	42	M10	12	45	3,3
22250-1100170201832				100	32	M8	10	45	3,3
22250-1100170201845				100	45	M12	14	45	3,8
22250-1100170201850				100	50	M12	14	45	3,8
22250-1100170201848				100	48	M12	14	45	3,8
22250-1100170201925	19	165,9	154,33	80	25	M6	8	45	3,3
22250-1100170201928				80	28	M6	8	45	3,3
22250-1100170201930				80	30	M6	8	45	3,3
22250-1100170201935				100	35	M8	10	45	3,3
22250-1100170201938				100	38	M8	10	45	3,3
22250-1100170201932				100	32	M8	10	45	3,3

Order No.	No. of teeth	D	D1	D2	D3	D4	B3	L	T2
22250-1100170201940				100	40	M10	12	45	3,3
22250-1100170201950				100	50	M12	14	45	3,8
22250-1100170201942				100	42	M10	12	45	3,3
22250-1100170201945				100	45	M12	14	45	3,8
22250-1100170201948				100	48	M12	14	45	3,8
22250-1100170202025	20	173,9	162,38	80	25	M6	8	45	3,3
22250-1100170202028				80	28	M6	8	45	3,3
22250-1100170202030				80	30	M6	8	45	3,3
22250-1100170202035				100	35	M8	10	45	3,3
22250-1100170202038				100	38	M8	10	45	3,3
22250-1100170202032				100	32	M8	10	45	3,3
22250-1100170202040				100	40	M10	12	45	3,3
22250-1100170202050				100	50	M12	14	45	3,8
22250-1100170202042				100	42	M10	12	45	3,3
22250-1100170202045				100	45	M12	14	45	3,8
22250-1100170202048				100	48	M12	14	45	3,8
22250-1100170202128	21	182	170,43	80	28	M6	8	50	3,3
22250-1100170202125				80	25	M6	8	50	3,3
22250-1100170202130				80	30	M6	8	50	3,3
22250-1100170202132				100	32	M8	10	50	3,3
22250-1100170202135				100	35	M8	10	50	3,3
22250-1100170202138				100	38	M8	10	50	3,3
22250-1100170202140				110	40	M10	12	50	3,3
22250-1100170202150				110	50	M12	14	50	3,8
22250-1100170202142				110	42	M10	12	50	3,3
22250-1100170202145				110	45	M12	14	50	3,8
22250-1100170202148				110	48	M12	14	50	3,8
22250-1100170202225	22	190,1	178,48	80	25	M6	8	50	3,3
22250-1100170202228				80	28	M6	8	50	3,3
22250-1100170202230				80	30	M6	8	50	3,3
22250-1100170202235				100	35	M8	10	50	3,3
22250-1100170202232				100	32	M8	10	50	3,3
22250-1100170202238				100	38	M8	10	50	3,3
22250-1100170202240				110	40	M10	12	50	3,3
22250-1100170202242				110	42	M10	12	50	3,3
22250-1100170202245				110	45	M12	14	50	3,8
22250-1100170202248				110	48	M12	14	50	3,8
22250-1100170202250				110	50	M12	14	50	3,8
22250-1100170202328	23	198,1	186,53	80	28	M6	8	50	3,3
22250-1100170202325				80	25	M6	8	50	3,3
22250-1100170202330				80	30	M6	8	50	3,3
22250-1100170202332				100	32	M8	10	50	3,3
22250-1100170202335				100	35	M8	10	50	3,3
22250-1100170202338				100	38	M8	10	50	3,3
22250-1100170202340				110	40	M10	12	50	3,3
22250-1100170202350				110	50	M12	14	50	3,8
22250-1100170202342				110	42	M10	12	50	3,3
22250-1100170202345				110	45	M12	14	50	3,8

norelem

Sprockets single 1“ x 17.02 mm

DIN ISO 606, ready to install

Order No.	No. of teeth	D	D1	D2	D3	D4	B3	L	T2
22250-1100170202348				110	48	M12	14	50	3,8
22250-1100170202428	24	206,2	194,59	80	28	M6	8	50	3,3
22250-1100170202425				80	25	M6	8	50	3,3
22250-1100170202430				80	30	M6	8	50	3,3
22250-1100170202432				100	32	M8	10	50	3,3
22250-1100170202435				100	35	M8	10	50	3,3
22250-1100170202438				100	38	M8	10	50	3,3
22250-1100170202440				110	40	M10	12	50	3,3
22250-1100170202450				110	50	M12	14	50	3,8
22250-1100170202442				110	42	M10	12	50	3,3
22250-1100170202445				110	45	M12	14	50	3,8
22250-1100170202448				110	48	M12	14	50	3,8
22250-1100170202525	25	214,2	202,66	80	25	M6	8	50	3,3
22250-1100170202528				80	28	M6	8	50	3,3
22250-1100170202530				80	30	M6	8	50	3,3
22250-1100170202532				100	32	M8	10	50	3,3
22250-1100170202535				100	35	M8	10	50	3,3
22250-1100170202538				100	38	M8	10	50	3,3
22250-1100170202540				110	40	M10	12	50	3,3
22250-1100170202550				110	50	M12	14	50	3,8
22250-1100170202542				110	42	M10	12	50	3,3
22250-1100170202545				110	45	M12	14	50	3,8
22250-1100170202548				110	48	M12	14	50	3,8

Sprockets single 3/8“ x 7/32“

DIN ISO 606

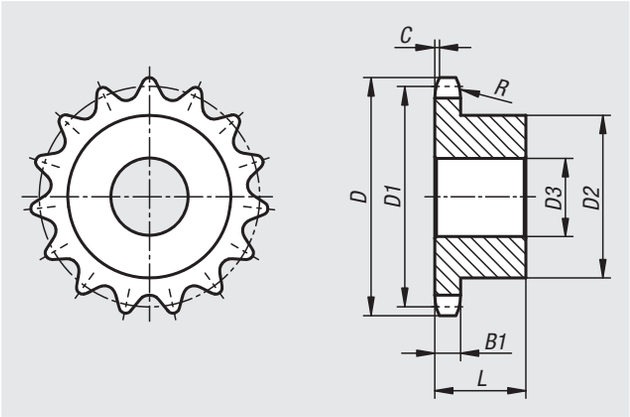

Material:
Steel C45.
Grey cast iron GG22 from 38 teeth.

Version:
Bright, not hardened.

Sample order:
nlm 22252-10380732008

Note:
Sprockets with hub one side for DIN ISO 606 roller chains.
The sprockets are pre-bored.

Order No.	ISO No.	Pitch inch	Pitch mm	R	C	B1
22252	06 B-1	3/8 x 7/32	9,525 x 5,72	10	1	5,3

Order No.	No. of teeth	D	D1	D2	D3 max.	L
22252-10380732008	8	28,6	24,89	15	8	20
22252-10380732009	9	31,5	27,85	18	8	20
22252-10380732010	10	34,5	30,82	20	8	20
22252-10380732011	11	37,5	33,8	22	8	25
22252-10380732012	12	40,5	36,8	25	8	25
22252-10380732013	13	43,5	39,8	28	8	25
22252-10380732014	14	46,5	42,8	31	8	25
22252-10380732015	15	49,5	45,81	34	8	25
22252-10380732016	16	52,5	48,82	37	10	28
22252-10380732017	17	55,5	51,83	40	10	28
22252-10380732018	18	58,6	54,85	43	10	28
22252-10380732019	19	61,6	57,87	45	10	28
22252-10380732020	20	64,6	60,89	46	10	28
22252-10380732021	21	67,6	63,91	48	12	28
22252-10380732022	22	70,6	66,93	50	12	28
22252-10380732023	23	73,7	69,95	52	12	28
22252-10380732024	24	76,7	72,97	54	12	28
22252-10380732025	25	79,7	76	57	12	28
22252-10380732026	26	82,7	79,02	60	12	28
22252-10380732027	27	85,7	82,04	60	12	28

Order No.	No. of teeth	D	D1	D2	D3 max.	L
22252-10380732028	28	88,8	85,07	60	12	28
22252-10380732029	29	91,8	88,09	60	12	28
22252-10380732030	30	94,8	91,12	60	12	30
22252-10380732031	31	97,9	94,15	65	14	30
22252-10380732032	32	100,9	97,17	65	14	30
22252-10380732033	33	103,9	100,2	65	14	30
22252-10380732034	34	106,9	103,23	65	14	30
22252-10380732035	35	110	106,26	65	14	30
22252-10380732036	36	113	109,29	70	16	30
22252-10380732037	37	116	112,32	70	16	30
22252-10380732038	38	119	115,34	70	20	32
22252-10380732045	45	141,1	136,54	70	20	32
22252-10380732057	57	177,5	172,91	70	20	32
22252-10380732076	76	235,1	230,49	70	20	35
22252-10380732095	95	292,7	288,08	80	20	40
22252-10380732114	114	350,3	345,68	80	20	40

Sprockets single 1/2“ x 5/16“

DIN ISO 606

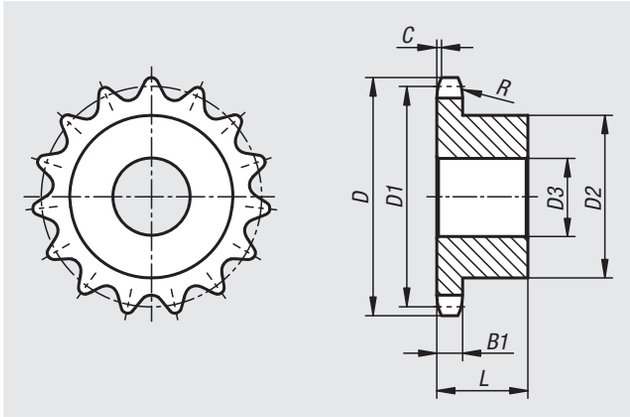

Material:
Steel C45.
Grey cast iron GG22 from 38 teeth.

Version:
Bright, not hardened.

Sample order:
nlm 22252-10120516008

Note:
Sprockets with hub one side for DIN ISO 606 roller chains.
The sprockets are pre-bored.

Order No.	ISO No.	Pitch inch	Pitch mm	R	C	B1
22252	08 B-1	1/2 x 5/16	12,7 x 7,75	13	1,3	7,2

Order No.	No. of teeth	D	D1	D2	D3 max.	L
22252-10120516008	8	38	33,18	20	10	25
22252-10120516009	9	42	37,13	24	10	25
22252-10120516010	10	45,9	41,1	26	10	25
22252-10120516011	11	49,9	45,07	29	10	25
22252-10120516012	12	53,9	49,07	33	10	28
22252-10120516013	13	57,9	53,06	37	10	28
22252-10120516014	14	61,9	57,07	41	10	28
22252-10120516015	15	65,9	61,09	45	10	28
22252-10120516016	16	69,9	65,1	50	12	28
22252-10120516017	17	74	69,11	52	12	28
22252-10120516018	18	78	73,14	56	12	28
22252-10120516019	19	82	77,16	60	12	28
22252-10120516020	20	86	81,19	64	12	28
22252-10120516021	21	90,1	85,22	68	14	28
22252-10120516022	22	94,1	89,24	70	14	28
22252-10120516023	23	98,1	93,27	70	14	28
22252-10120516024	24	102,1	97,29	70	14	28
22252-10120516025	25	106,2	101,33	70	14	28
22252-10120516026	26	110,2	105,36	70	16	30
22252-10120516027	27	114,2	109,4	70	16	30

Order No.	No. of teeth	D	D1	D2	D3 max.	L
22252-10120516028	28	118,3	113,42	70	16	30
22252-10120516029	29	122,3	117,46	80	16	30
22252-10120516030	30	126,3	121,5	80	16	30
22252-10120516031	31	130,4	125,54	90	16	30
22252-10120516032	32	134,4	129,56	90	16	30
22252-10120516033	33	138,4	133,6	90	16	30
22252-10120516034	34	142,5	137,64	90	16	30
22252-10120516035	35	146,5	141,68	90	16	30
22252-10120516036	36	150,6	145,72	90	16	35
22252-10120516037	37	154,6	149,76	90	16	35
22252-10120516038	38	158,6	153,8	70	24	40
22252-10120516045	45	188,6	182,07	70	24	40
22252-10120516057	57	237,1	230,54	70	24	40
22252-10120516076	76	313,9	307,33	80	24	40
22252-10120516095	95	390,7	384,11	80	24	45
22252-10120516114	114	467,4	460,9	80	24	45

Sprockets single 5/8“ x 3/8“

DIN ISO 606

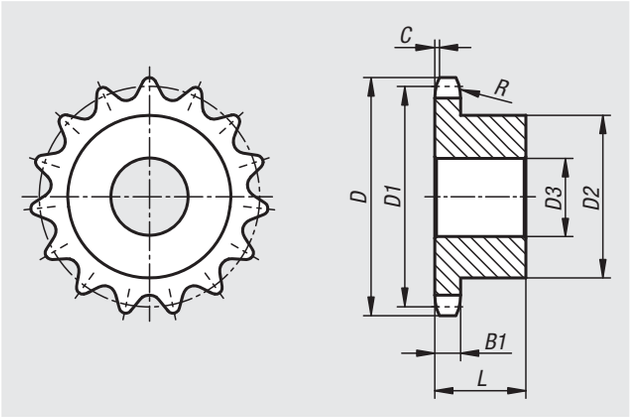

Material:
Steel C45.
Grey cast iron GG22 from 38 teeth.

Version:
Bright, not hardened.

Sample order:
nlm 22252-10580308008

Note:
Sprockets with hub one side for DIN ISO 606 roller chains.
The sprockets are pre-bored.

Order No.	ISO No.	Pitch inch	Pitch mm	R	C	B1
22252	10 B-1	5/8 x 3/8	15,875 x 9,65	16	1,6	9,1

Order No.	No. of teeth	D	D1	D2	D3 max.	L
22252-10580308008	8	48,4	41,48	25	10	25
22252-10580308009	9	53,3	46,42	30	10	25
22252-10580308010	10	58,3	51,37	35	10	25
22252-10580308011	11	63,2	56,34	37	12	30
22252-10580308012	12	68,2	61,34	42	12	30
22252-10580308013	13	73,2	66,32	47	12	30
22252-10580308014	14	78,2	71,34	52	12	30
22252-10580308015	15	83,2	76,36	57	12	30
22252-10580308016	16	88,3	81,37	60	12	30
22252-10580308017	17	93,3	86,39	60	12	30
22252-10580308018	18	98,3	91,42	70	14	30
22252-10580308019	19	103,3	96,45	70	14	30
22252-10580308020	20	108,4	101,49	75	14	30
22252-10580308021	21	113,4	106,52	75	16	30
22252-10580308022	22	118,4	111,55	80	16	30
22252-10580308023	23	123,5	116,58	80	16	30
22252-10580308024	24	128,5	121,62	80	16	30
22252-10580308025	25	133,6	126,66	80	16	30
22252-10580308026	26	138,6	131,7	85	20	35
22252-10580308027	27	143,6	136,75	85	20	35

Order No.	No. of teeth	D	D1	D2	D3 max.	L
22252-10580308028	28	148,7	141,78	90	20	35
22252-10580308029	29	153,7	146,83	90	20	35
22252-10580308030	30	158,8	151,87	90	20	35
22252-10580308031	31	163,8	156,92	95	20	35
22252-10580308032	32	168,9	161,95	95	20	35
22252-10580308033	33	173,9	167	95	20	35
22252-10580308034	34	178,9	172,05	95	20	35
22252-10580308035	35	184	177,1	95	20	35
22252-10580308036	36	189	182,15	100	20	35
22252-10580308037	37	194,1	187,2	100	20	35
22252-10580308038	38	199,1	192,24	80	24	40
22252-10580308045	45	236	227,58	80	24	40
22252-10580308057	57	296,6	288,18	90	24	45
22252-10580308076	76	392,5	384,16	90	24	50
22252-10580308095	95	488,5	480,14	100	24	56
22252-10580308114	114	584,5	576,13	100	24	56

Sprockets single 3/4" x 7/16"

DIN ISO 606

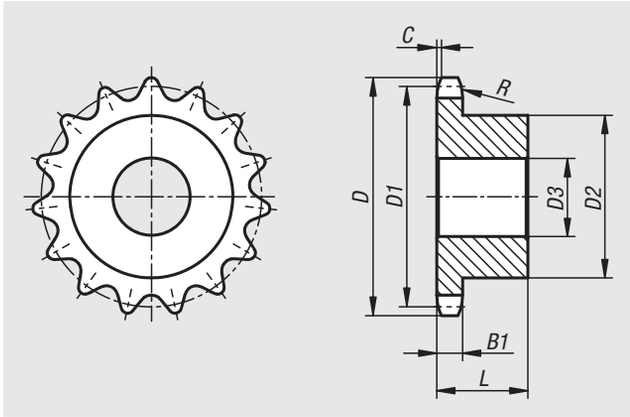

Material:
Steel C45.
Grey cast iron GG22 from 38 teeth.

Version:
Bright, not hardened.

Sample order:
nlm 22252-10340716008

Note:
Sprockets with hub one side for DIN ISO 606 roller chains.
The sprockets are pre-bored.

Order No.	ISO No.	Pitch inch	Pitch mm	R	C	B1
22252	12 B-1	3/4 x 7/16	19,05 x 11,68	19	2	11,1

Order No.	No. of teeth	D	D1	D2	D3 max.	L
22252-10340716008	8	58	49,78	31	12	30
22252-10340716009	9	63,9	55,7	37	12	30
22252-10340716010	10	69,8	61,64	42	12	30
22252-10340716011	11	75,8	67,61	46	16	35
22252-10340716012	12	81,8	73,6	52	16	35
22252-10340716013	13	87,8	79,59	58	16	35
22252-10340716014	14	93,8	85,61	64	16	35
22252-10340716015	15	99,8	91,63	70	16	35
22252-10340716016	16	105,8	97,65	75	16	35
22252-10340716017	17	111,9	103,67	80	16	35
22252-10340716018	18	117,9	109,71	80	16	35
22252-10340716019	19	123,9	115,75	80	16	35
22252-10340716020	20	130	121,78	80	16	35
22252-10340716021	21	136	127,82	90	20	40
22252-10340716022	22	142	133,86	90	20	40
22252-10340716023	23	148,1	139,9	90	20	40
22252-10340716024	24	154,1	145,94	90	20	40
22252-10340716025	25	160,2	152	90	20	40
22252-10340716026	26	166,2	158,04	95	20	40
22252-10340716027	27	172,3	164,09	95	20	40

Order No.	No. of teeth	D	D1	D2	D3 max.	L
22252-10340716028	28	178,3	170,13	95	20	40
22252-10340716029	29	184,4	176,19	95	20	40
22252-10340716030	30	190,4	182,25	95	20	40
22252-10340716031	31	196,5	188,31	95	20	40
22252-10340716032	32	202,5	194,35	95	20	40
22252-10340716033	33	208,6	200,4	95	20	40
22252-10340716034	34	214,6	206,46	95	20	40
22252-10340716035	35	220,7	212,52	95	20	40
22252-10340716036	36	226,8	218,58	100	20	40
22252-10340716037	37	232,8	224,64	100	20	40
22252-10340716038	38	238,9	230,69	100	24	56
22252-10340716045	45	283,2	273,1	100	24	56
22252-10340716057	57	355,9	345,81	100	30	56
22252-10340716076	76	471,1	460,99	100	30	56
22252-10340716095	95	586,2	576,17	100	30	65
22252-10340716114	114	701,4	691,36	100	30	65

Sprockets single 1“ x 17.02 mm

DIN ISO 606

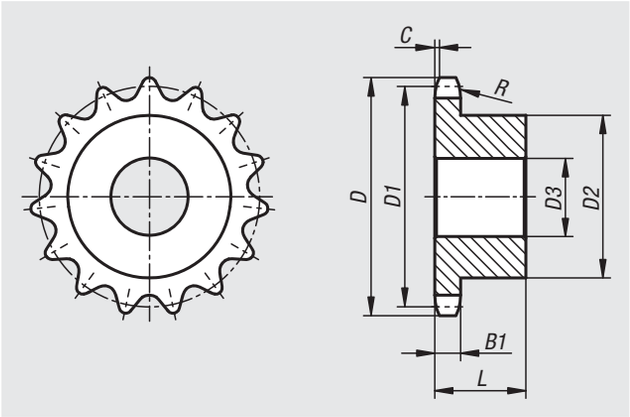

Material:
Steel C45.
Grey cast iron GG22 from 38 teeth.

Version:
Bright, not hardened.

Sample order:
nlm 22252-11001702008

Note:
Sprockets with hub one side for DIN ISO 606 roller chains.
The sprockets are pre-bored.

Order No.	ISO No.	Pitch inch	Pitch mm	R	C	B1
22252	16 B-1	1 x 17,02mm	25,4 x 17,02	26	2,5	16,2

Order No.	No. of teeth	D	D1	D2	D3 max.	L
22252-11001702008	8	77,9	66,37	42	16	35
22252-11001702009	9	85,8	74,27	50	16	35
22252-11001702010	10	93,8	82,19	55	16	35
22252-11001702011	11	101,7	90,14	61	16	40
22252-11001702012	12	109,7	98,14	69	16	40
22252-11001702013	13	117,7	106,12	78	16	40
22252-11001702014	14	125,7	114,15	84	16	40
22252-11001702015	15	133,7	122,17	92	16	40
22252-11001702016	16	141,8	130,2	100	20	45
22252-11001702017	17	149,8	138,22	100	20	45
22252-11001702018	18	157,8	146,28	100	20	45
22252-11001702019	19	165,9	154,33	100	20	45
22252-11001702020	20	173,9	162,38	100	20	45
22252-11001702021	21	182	170,43	110	20	50
22252-11001702022	22	190,1	178,48	110	20	50
22252-11001702023	23	198,1	186,53	110	20	50
22252-11001702024	24	206,2	194,59	110	20	50
22252-11001702025	25	214,2	202,66	110	20	50
22252-11001702026	26	222,3	210,72	120	20	50
22252-11001702027	27	230,4	218,79	120	20	50

Order No.	No. of teeth	D	D1	D2	D3 max.	L
22252-11001702028	28	238,4	226,85	120	20	50
22252-11001702029	29	246,5	234,92	120	20	50
22252-11001702030	30	254,6	243	120	20	50
22252-11001702031	31	262,6	251,08	120	25	50
22252-11001702032	32	270,7	259,13	120	25	50
22252-11001702033	33	278,8	267,21	120	25	50
22252-11001702034	34	286,9	275,28	120	25	50
22252-11001702035	35	294,9	283,36	120	25	50
22252-11001702036	36	303	291,44	120	25	50
22252-11001702037	37	311,1	299,51	120	25	50
22252-11001702038	38	319,2	307,59	110	30	65
22252-11001702045	45	377,9	364,12	125	30	70
22252-11001702057	57	474,9	461,07	125	35	70
22252-11001702076	76	628,4	614,65	140	35	80
22252-11001702095	95	782	768,22	140	40	80
22252-11001702114	114	935,6	921,81	150	40	80

Sprockets single 3/8“ x 7/32“ stainless steel

DIN ISO 606

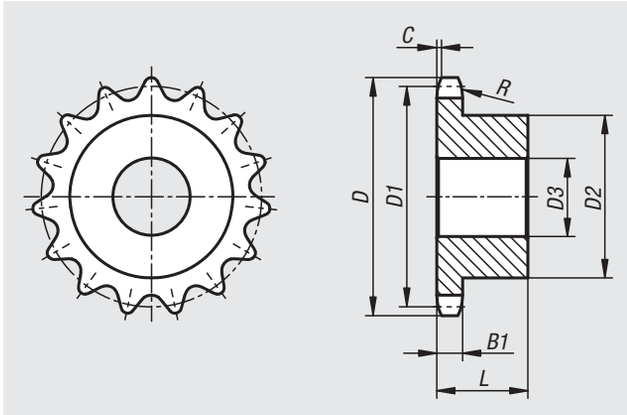

Material:
Stainless steel 1.4305.

Version:
Bright.

Sample order:
nlm 22255-10380732013

Note:
Sprockets with hub one side for DIN ISO 606 roller chains.
The sprockets are pre-bored.

Order No.	ISO No.	Pitch inch	Pitch mm	R	C	B1
22255	06 B-1	3/8 x 7/32	9,525 x 5,72	10	1	5,3

Order No.	No. of teeth	D	D1	D2	D3 max.	L
22255-10380732013	13	43,5	39,8	28	8	25
22255-10380732014	14	46,5	42,8	31	8	25
22255-10380732015	15	49,5	45,81	34	8	25
22255-10380732016	16	52,5	48,82	37	10	28
22255-10380732017	17	55,5	51,83	40	10	28
22255-10380732018	18	58,6	54,85	43	10	28
22255-10380732019	19	61,6	57,87	45	10	28
22255-10380732020	20	64,6	60,89	46	10	28
22255-10380732021	21	67,6	63,91	48	12	28
22255-10380732023	23	73,7	69,95	52	12	28
22255-10380732025	25	79,7	76	57	12	28
22255-10380732030	30	94,8	91,12	60	12	30

Sprockets single 1/2“ x 5/16“ stainless steel

DIN ISO 606

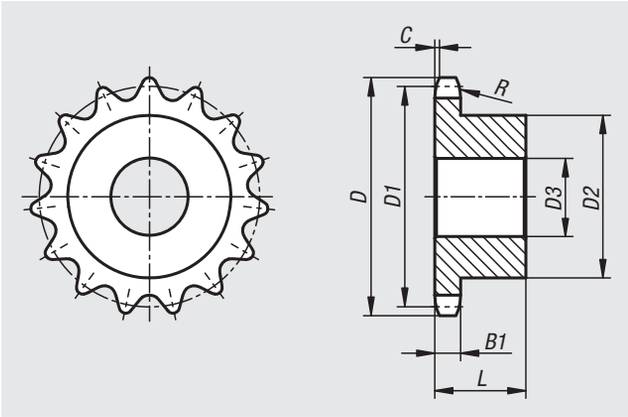

Material:
Stainless steel 1.4305.

Version:
Bright.

Sample order:
nlm 22255-10120516012

Note:
Sprockets with hub one side for DIN ISO 606 roller chains.
The sprockets are pre-bored.

Order No.	ISO No.	Pitch inch	Pitch mm	R	C	B1
22255	08 B-1	1/2 x 5/16	12,7 x 7,75	13	1,3	7,2

Order No.	No. of teeth	D	D1	D2	D3 max.	L
22255-10120516012	12	53,9	49,07	33	10	28
22255-10120516013	13	57,9	53,06	37	10	28
22255-10120516014	14	61,9	57,07	41	10	28
22255-10120516015	15	65,9	61,09	45	10	28
22255-10120516016	16	69,9	65,1	50	12	28
22255-10120516017	17	74	69,11	52	12	28
22255-10120516018	18	78	73,14	56	12	28
22255-10120516019	19	82	77,16	60	12	28
22255-10120516020	20	86	81,19	64	12	28
22255-10120516021	21	90,1	85,22	68	14	28
22255-10120516023	23	98,1	93,27	70	14	28
22255-10120516025	25	106,2	101,33	70	14	28
22255-10120516030	30	126,3	121,5	80	16	30

Sprockets single 5/8" x 3/8" stainless steel

DIN ISO 606

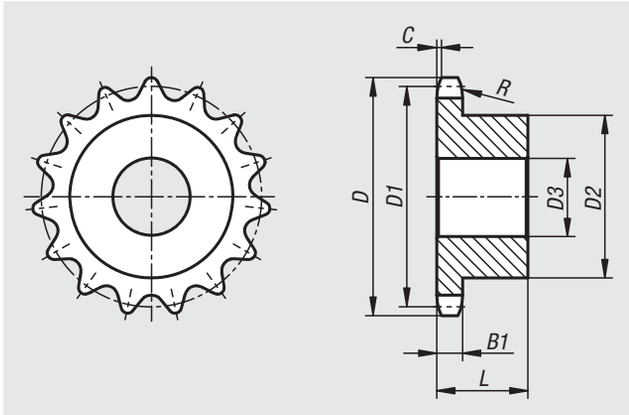

Material:
Stainless steel 1.4305.

Version:
Bright.

Sample order:
nlm 22255-10580308013

Note:
Sprockets with hub one side for DIN ISO 606 roller chains.
The sprockets are pre-bored.

Order No.	ISO No.	Pitch inch	Pitch mm	R	C	B1
22255	10 B-1	5/8 x 3/8	15,875 x 9,65	16	1,6	9,1

Order No.	No. of teeth	D	D1	D2	D3 max.	L
22255-10580308013	13	73,2	66,32	47	12	30
22255-10580308014	14	78,2	71,34	52	12	30
22255-10580308015	15	83,2	76,36	57	12	30
22255-10580308016	16	88,3	81,37	60	12	30
22255-10580308017	17	93,3	86,39	60	12	30
22255-10580308018	18	98,3	91,42	70	14	30
22255-10580308019	19	103,3	96,45	70	14	30
22255-10580308020	20	108,4	101,49	75	14	30
22255-10580308021	21	113,4	106,52	75	16	30
22255-10580308023	23	123,5	116,58	80	16	30
22255-10580308025	25	133,6	126,66	80	16	30
22255-10580308030	30	158,8	151,87	90	20	35

Sprockets single 3/4“ x 7/16“ stainless steel

DIN ISO 606

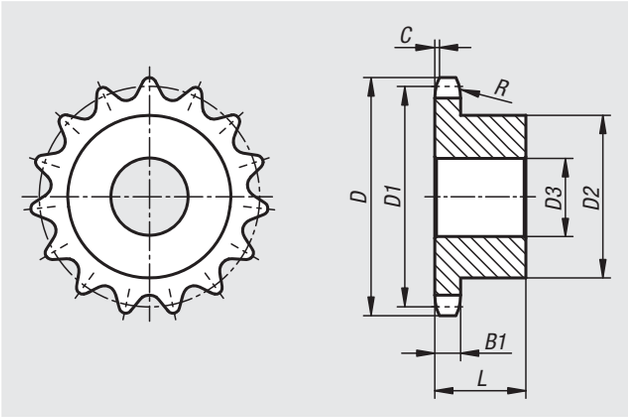

Material:
Stainless steel 1.4305.

Version:
Bright.

Sample order:
nlm 22255-10340716013

Note:
Sprockets with hub one side for DIN ISO 606 roller chains.
The sprockets are pre-bored.

Order No.	ISO No.	Pitch inch	Pitch mm	R	C	B1
22255	12 B-1	3/4 x 7/16	19,05 x 11,68	19	2	11,1

Order No.	No. of teeth	D	D1	D2	D3 max.	L
22255-10340716013	13	87,8	79,59	58	16	35
22255-10340716014	14	93,8	85,61	64	16	35
22255-10340716015	15	99,8	91,63	70	16	35
22255-10340716016	16	105,8	97,65	75	16	35
22255-10340716017	17	111,9	103,67	80	16	35
22255-10340716018	18	117,9	109,71	80	16	35
22255-10340716019	19	123,9	115,75	80	16	35
22255-10340716020	20	130	121,78	80	16	35
22255-10340716021	21	136	127,82	90	20	40
22255-10340716023	23	148,1	139,9	90	20	40
22255-10340716025	25	160,2	152	90	20	40

Sprockets single 1“ x 17.02 mm stainless steel

DIN ISO 606

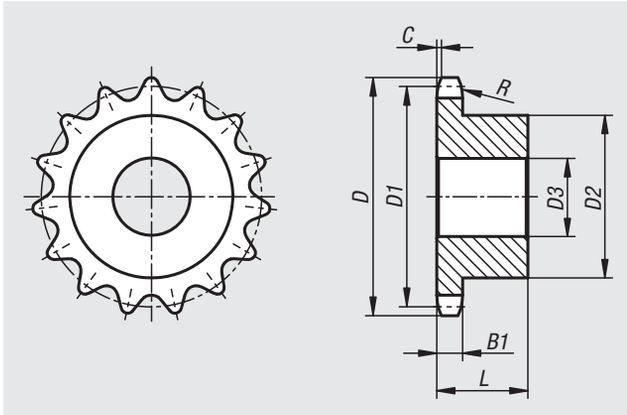

Material:
Stainless steel 1.4305.

Version:
Bright.

Sample order:
nlm 22255-11001702013

Note:
Sprockets with hub one side for DIN ISO 606 roller chains.
The sprockets are pre-bored.

Order No.	ISO No.	Pitch inch	Pitch mm	R	C	B1
22255	16 B-1	1 x 17,02mm	25,4 x 17,02	26	2,5	16,2

Order No.	No. of teeth	D	D1	D2	D3 max.	L
22255-11001702013	13	117,7	106,12	78	16	40
22255-11001702014	14	125,7	114,15	84	16	40
22255-11001702015	15	133,7	122,17	92	16	40
22255-11001702016	16	141,8	130,2	100	20	45
22255-11001702017	17	149,8	138,22	100	20	45
22255-11001702018	18	157,8	146,28	100	20	45
22255-11001702019	19	165,9	154,33	100	20	45
22255-11001702020	20	173,9	162,38	100	20	45
22255-11001702021	21	182	170,43	110	20	50

Sprockets single 3/8“ x 7/32“

DIN ISO 606

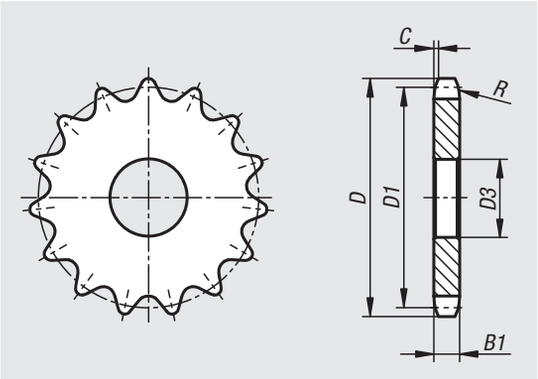

Material:
Low-carbon steel.

Version:
Bright, not hardened (cannot be hardened).

Sample order:
nlm 22264-10380732008

Note:
Sprockets for DIN ISO 606 roller chains.
The sprockets are pre-bored.

Order No.	ISO No.	Pitch inch	Pitch mm	R	C	B1
22264	06 B-1	3/8 x 7/32	9,525 x 5,72	10	1	5,3

Order No.	No. of teeth	D	D1	D3 max.
22264-10380732008	8	28,6	24,89	6
22264-10380732009	9	31,5	27,85	8
22264-10380732010	10	34,5	30,82	8
22264-10380732011	11	37,5	33,8	8
22264-10380732012	12	40,5	36,8	8
22264-10380732013	13	43,5	39,8	8
22264-10380732014	14	46,5	42,8	8
22264-10380732015	15	49,5	45,81	8
22264-10380732016	16	52,5	48,82	10
22264-10380732017	17	55,5	51,83	10
22264-10380732018	18	58,6	54,85	10
22264-10380732019	19	61,6	57,87	10
22264-10380732020	20	64,6	60,89	10
22264-10380732021	21	67,6	63,91	10
22264-10380732022	22	70,6	66,93	10
22264-10380732023	23	73,7	69,95	10
22264-10380732024	24	76,7	72,97	10
22264-10380732025	25	79,7	76	10
22264-10380732026	26	82,7	79,02	10
22264-10380732027	27	85,7	82,04	10

Order No.	No. of teeth	D	D1	D3 max.
22264-10380732028	28	88,8	85,07	10
22264-10380732029	29	91,8	88,09	10
22264-10380732030	30	94,8	91,12	10
22264-10380732031	31	97,9	94,15	12
22264-10380732032	32	100,9	97,17	12
22264-10380732033	33	103,9	100,2	12
22264-10380732034	34	106,9	103,23	12
22264-10380732035	35	110	106,26	12
22264-10380732036	36	113	109,29	12
22264-10380732037	37	116	112,32	12
22264-10380732038	38	119	115,34	12
22264-10380732039	39	122,1	118,37	12
22264-10380732040	40	125,1	121,4	12
22264-10380732041	41	129	124,43	16
22264-10380732042	42	132,1	127,46	16
22264-10380732043	43	135,1	130,49	16
22264-10380732044	44	135,1	133,52	16
22264-10380732045	45	141,1	136,54	16
22264-10380732046	46	144,2	139,58	16
22264-10380732047	47	147,2	142,61	16

Sprockets single 3/8“ x 7/32“

DIN ISO 606

Order No.	No. of teeth	D	D1	D3 max.
22264-10380732048	48	150,2	145,64	16
22264-10380732049	49	153,3	148,66	16
22264-10380732050	50	156,3	151,69	20
22264-10380732051	51	159,3	154,72	20
22264-10380732052	52	162,4	157,75	20
22264-10380732053	53	165,4	160,78	20
22264-10380732054	54	168,4	163,82	20
22264-10380732055	55	171,4	166,85	20
22264-10380732056	56	174,5	169,88	20
22264-10380732057	57	177,5	172,91	20
22264-10380732058	58	180,5	175,93	20
22264-10380732060	60	186,6	181,99	20
22264-10380732062	62	192,7	188,06	20
22264-10380732064	64	198,7	194,12	20
22264-10380732065	65	201,8	197,15	20
22264-10380732066	66	204,8	200,18	20
22264-10380732068	68	210,8	206,24	20
22264-10380732070	70	216,9	212,3	20
22264-10380732072	72	223	218,37	20
22264-10380732075	75	232,1	227,46	20
22264-10380732076	76	235,1	230,49	20
22264-10380732080	80	247,2	242,61	20
22264-10380732085	85	262,4	257,77	20
22264-10380732090	90	277,5	272,93	20
22264-10380732095	95	292,7	288,08	20
22264-10380732100	100	307,8	303,25	20
22264-10380732110	110	338,2	333,55	20
22264-10380732114	114	350,3	345,68	20
22264-10380732120	120	368,5	363,86	20
22264-10380732125	125	383,6	379,02	20

Sprockets single 1/2“ x 5/16“

DIN ISO 606

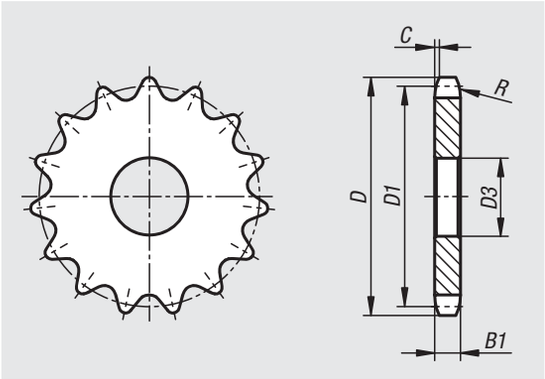

Material:
Low-carbon steel.

Version:
Bright, not hardened (cannot be hardened).

Sample order:
nlm 22264-10120516008

Note:
Sprockets for DIN ISO 606 roller chains.
The sprockets are pre-bored.

Order No.	ISO No.	Pitch inch	Pitch mm	R	C	B1
22264	08 B-1	1/2 x 5/16	12,7 x 7,75	13	1,3	7,2

Order No.	No. of teeth	D	D1	D3 max.
22264-10120516008	8	38	33,18	8
22264-10120516009	9	42	37,13	8
22264-10120516010	10	45,9	41,1	8
22264-10120516011	11	49,9	45,07	10
22264-10120516012	12	53,9	49,07	10
22264-10120516013	13	57,9	53,06	10
22264-10120516014	14	61,9	57,07	10
22264-10120516015	15	65,9	61,09	10
22264-10120516016	16	69,9	65,1	10
22264-10120516017	17	74	69,11	10
22264-10120516018	18	78	73,14	10
22264-10120516019	19	82	77,16	10
22264-10120516020	20	86	81,19	10
22264-10120516021	21	90,1	85,22	12
22264-10120516022	22	94,1	89,24	12
22264-10120516023	23	98,1	93,27	12
22264-10120516024	24	102,1	97,29	12
22264-10120516025	25	106,2	101,33	16
22264-10120516026	26	110,2	105,36	16
22264-10120516027	27	114,2	109,4	16

Order No.	No. of teeth	D	D1	D3 max.
22264-10120516028	28	118,3	113,42	16
22264-10120516029	29	122,3	117,46	16
22264-10120516030	30	126,3	121,5	16
22264-10120516031	31	130,4	125,54	16
22264-10120516032	32	134,4	129,56	16
22264-10120516033	33	138,4	133,6	16
22264-10120516034	34	142,5	137,64	16
22264-10120516035	35	146,5	141,68	16
22264-10120516036	36	150,6	145,72	16
22264-10120516037	37	154,6	149,76	16
22264-10120516038	38	158,6	153,8	16
22264-10120516039	39	162,7	157,83	16
22264-10120516040	40	166,7	161,87	16
22264-10120516041	41	172,4	165,91	20
22264-10120516042	42	176,5	169,95	20
22264-10120516043	43	180,5	173,99	20
22264-10120516044	44	184,6	178,03	20
22264-10120516045	45	188,6	182,07	20
22264-10120516046	46	192,6	186,1	20
22264-10120516047	47	196,7	190,14	20

Sprockets single 1/2“ x 5/16“

DIN ISO 606

Order No.	No. of teeth	D	D1	D3 max.
22264-10120516048	48	200,7	194,18	20
22264-10120516049	49	204,8	198,22	20
22264-10120516050	50	208,8	202,26	20
22264-10120516051	51	212,8	206,3	20
22264-10120516052	52	216,9	210,34	20
22264-10120516053	53	220,9	214,37	20
22264-10120516054	54	225	218,43	20
22264-10120516055	55	229	222,46	20
22264-10120516056	56	233	226,5	20
22264-10120516057	57	237,1	230,54	20
22264-10120516058	58	241,1	234,58	20
22264-10120516060	60	249,2	242,66	20
22264-10120516062	62	257,3	250,75	25
22264-10120516064	64	265,4	258,82	25
22264-10120516065	65	269,4	262,86	25
22264-10120516066	66	273,4	266,9	25
22264-10120516068	68	281,5	274,99	25
22264-10120516070	70	289,6	283,07	25
22264-10120516072	72	297,7	291,16	25
22264-10120516075	75	309,8	303,27	25
22264-10120516076	76	313,9	307,33	25
22264-10120516078	78	321,9	315,4	25
22264-10120516080	80	330	323,48	25
22264-10120516085	85	350,2	343,69	25
22264-10120516090	90	370,4	363,9	25
22264-10120516095	95	390,7	384,11	25
22264-10120516100	100	410,9	404,31	25
22264-10120516110	110	451,3	444,74	25
22264-10120516114	114	467,4	460,9	25
22264-10120516120	120	491,7	485,16	25
22264-10120516125	125	511	505,37	25

Sprockets single 5/8“ x 3/8“

DIN ISO 606

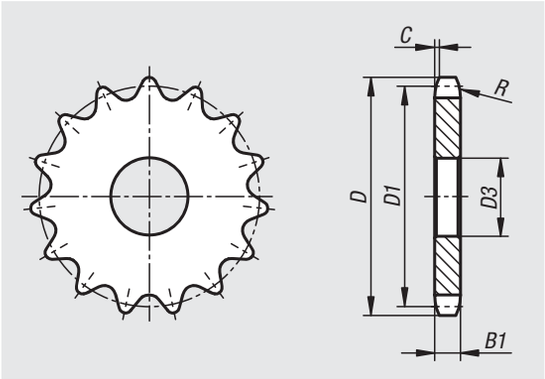

Material:
Low-carbon steel.

Version:
Bright, not hardened (cannot be hardened).

Sample order:
nlm 22264-10580308008

Note:
Sprockets for DIN ISO 606 roller chains.
The sprockets are pre-bored.

Order No.	ISO No.	Pitch inch	Pitch mm	R	C	B1
22264	10 B-1	5/8 x 3/8	15,875 x 9,65	16	1,6	9,1

Order No.	No. of teeth	D	D1	D3 max.
22264-10580308008	8	48,4	41,48	10
22264-10580308009	9	53,3	46,42	10
22264-10580308010	10	58,3	51,37	10
22264-10580308011	11	63,2	56,34	10
22264-10580308012	12	68,2	61,34	10
22264-10580308013	13	73,2	66,32	10
22264-10580308014	14	78,2	71,34	12
22264-10580308015	15	83,2	76,36	12
22264-10580308016	16	88,3	81,37	12
22264-10580308017	17	93,3	86,39	12
22264-10580308018	18	98,3	91,42	12
22264-10580308019	19	103,3	96,45	12
22264-10580308020	20	108,4	101,49	12
22264-10580308021	21	113,4	106,52	12
22264-10580308022	22	118,4	111,55	12
22264-10580308023	23	123,5	116,58	12
22264-10580308024	24	128,5	121,62	12
22264-10580308025	25	133,6	126,66	12
22264-10580308026	26	138,6	131,7	16
22264-10580308027	27	143,6	136,75	16

Order No.	No. of teeth	D	D1	D3 max.
22264-10580308028	28	148,7	141,78	16
22264-10580308029	29	153,7	146,83	16
22264-10580308030	30	158,8	151,87	16
22264-10580308031	31	163,8	156,92	16
22264-10580308032	32	168,9	161,95	16
22264-10580308033	33	173,9	167	16
22264-10580308034	34	178,9	172,05	16
22264-10580308035	35	184	177,1	16
22264-10580308036	36	189	182,15	20
22264-10580308037	37	194,1	187,2	20
22264-10580308038	38	199,1	192,24	20
22264-10580308039	39	204,2	197,29	20
22264-10580308040	40	209,2	202,34	20
22264-10580308041	41	215,8	207,39	20
22264-10580308042	42	220,8	212,44	20
22264-10580308043	43	225,9	217,49	20
22264-10580308044	44	230,9	222,53	20
22264-10580308045	45	236	227,58	20
22264-10580308046	46	241	236,63	20
22264-10580308047	47	246,1	237,68	20

Sprockets single 5/8“ x 3/8“

DIN ISO 606

Order No.	No. of teeth	D	D1	D3 max.
22264-10580308048	48	251,1	242,73	20
22264-10580308049	49	256,2	247,78	20
22264-10580308050	50	261,2	252,82	20
22264-10580308051	51	266,3	257,87	20
22264-10580308052	52	271,3	262,92	20
22264-10580308053	53	276,4	267,97	20
22264-10580308054	54	281,4	273,03	20
22264-10580308055	55	286,5	278,08	20
22264-10580308056	56	291,5	283,13	25
22264-10580308057	57	296,6	288,18	25
22264-10580308058	58	301,6	293,23	25
22264-10580308060	60	311,7	303,32	25
22264-10580308062	62	321,8	313,43	25
22264-10580308064	64	331,9	323,53	25
22264-10580308065	65	337	328,58	25
22264-10580308068	68	352,1	343,74	25
22264-10580308070	70	362,2	353,84	25
22264-10580308072	72	372,2	363,95	25
22264-10580308075	75	387,5	379,09	25
22264-10580308076	76	392,5	384,16	25
22264-10580308078	78	402,6	394,25	25
22264-10580308080	80	412,7	404,35	25
22264-10580308085	85	438	429,62	30
22264-10580308090	90	463,3	454,88	30
22264-10580308095	95	488,5	480,14	30
22264-10580308100	100	513,8	505,4	30
22264-10580308110	110	564,3	555,92	30
22264-10580308114	114	584,5	576,13	30
22264-10580308120	120	614,8	606,44	30
22264-10580308125	125	640,1	631,71	30

Sprockets single 3/4“ x 7/16“

DIN ISO 606

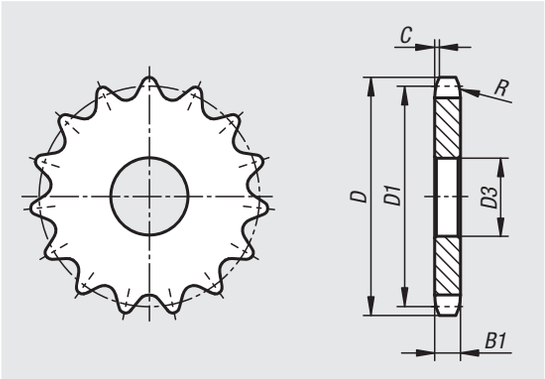

Material:
Low-carbon steel.

Version:
Bright, not hardened (cannot be hardened).

Sample order:
nlm 22264-10340716008

Note:
Sprockets for DIN ISO 606 roller chains.
The sprockets are pre-bored.

Order No.	ISO No.	Pitch inch	Pitch mm	R	C	B1
22264	12 B-1	3/4 x 7/16	19,05 x 11,68	19	2	11,1

Order No.	No. of teeth	D	D1	D3 max.
22264-10340716008	8	58	49,78	10
22264-10340716009	9	63,9	55,7	10
22264-10340716010	10	69,8	61,64	10
22264-10340716011	11	75,8	67,61	12
22264-10340716012	12	81,8	73,6	14
22264-10340716013	13	87,8	79,59	14
22264-10340716014	14	93,8	85,61	14
22264-10340716015	15	99,8	91,63	14
22264-10340716016	16	105,8	97,65	14
22264-10340716017	17	111,9	103,67	14
22264-10340716018	18	117,9	109,71	14
22264-10340716019	19	123,9	115,75	14
22264-10340716020	20	130	121,78	14
22264-10340716021	21	136	127,82	16
22264-10340716022	22	142	133,86	16
22264-10340716023	23	148,1	139,9	16
22264-10340716024	24	154,1	145,94	16
22264-10340716025	25	160,2	152	16
22264-10340716026	26	166,2	158,04	16
22264-10340716027	27	172,3	164,09	16

Order No.	No. of teeth	D	D1	D3 max.
22264-10340716028	28	178,3	170,13	16
22264-10340716029	29	184,4	176,19	16
22264-10340716030	30	190,4	182,25	16
22264-10340716031	31	196,5	188,31	20
22264-10340716032	32	202,5	194,35	20
22264-10340716033	33	208,6	200,4	20
22264-10340716034	34	214,6	206,46	20
22264-10340716035	35	220,7	212,52	20
22264-10340716036	36	226,8	218,58	20
22264-10340716037	37	232,8	224,64	20
22264-10340716038	38	238,9	230,69	20
22264-10340716039	39	244,9	236,75	20
22264-10340716040	40	251	242,81	20
22264-10340716041	41	258,9	248,87	25
22264-10340716042	42	265	254,93	25
22264-10340716043	43	271,1	260,98	25
22264-10340716044	44	277,1	267,03	25
22264-10340716045	45	283,2	273,1	25
22264-10340716046	46	289,2	279,16	25
22264-10340716047	47	295,3	285,21	25

Sprockets single 3/4“ x 7/16“

DIN ISO 606

Order No.	No. of teeth	D	D1	D3 max.
22264-10340716048	48	301,4	291,27	25
22264-10340716049	49	307,4	297,33	25
22264-10340716050	50	313,5	303,39	25
22264-10340716051	51	319,5	309,45	25
22264-10340716052	52	325,6	315,5	25
22264-10340716053	53	331,6	321,56	25
22264-10340716054	54	337,7	327,64	25
22264-10340716055	55	343,8	333,7	25
22264-10340716056	56	349,8	339,75	25
22264-10340716057	57	355,9	345,81	25
22264-10340716058	58	362	351,87	25
22264-10340716060	60	374,1	363,99	25
22264-10340716062	62	386,2	376,12	25
22264-10340716064	64	398,3	388,24	25
22264-10340716065	65	404,4	394,29	25
22264-10340716068	68	422,6	412,49	30
22264-10340716070	70	434,7	424,61	30
22264-10340716072	72	446,8	436,74	30
22264-10340716075	75	465	454,91	30
22264-10340716076	76	471,1	460,99	30
22264-10340716078	78	483,2	473,1	30
22264-10340716080	80	495,3	485,22	30
22264-10340716085	85	525,6	515,55	30
22264-10340716090	90	555,9	545,86	30
22264-10340716095	95	586,2	576,17	30
22264-10340716100	100	616,6	606,47	30
22264-10340716110	110	677,2	667,11	30
22264-10340716114	114	701,4	691,36	30
22264-10340716120	120	737,8	727,74	30
22264-10340716125	125	768,1	758,05	30

Sprockets single 1“ x 17.02 mm

DIN ISO 606

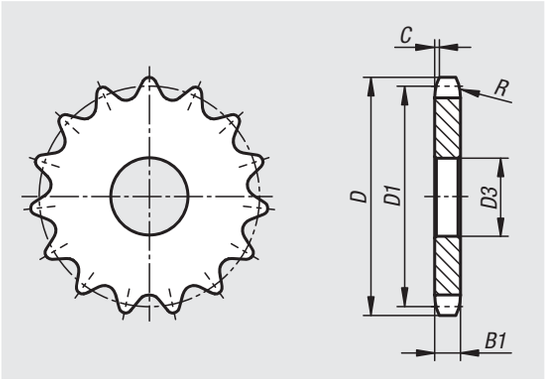

Material:
Low-carbon steel.

Version:
Bright, not hardened (cannot be hardened).

Sample order:
nlm 22264-11001702008

Note:
Sprockets for DIN ISO 606 roller chains.
The sprockets are pre-bored.

Order No.	ISO No.	Pitch inch	Pitch mm	R	C	B1
22264	16 B-1	1 x 17,02mm	25,4 x 17,02	26	2,5	16,2

Order No.	No. of teeth	D	D1	D3 max.
22264-11001702008	8	77,9	66,37	16
22264-11001702009	9	85,8	74,27	16
22264-11001702010	10	93,8	82,19	16
22264-11001702011	11	101,7	90,14	16
22264-11001702012	12	109,7	98,14	16
22264-11001702013	13	117,7	106,12	16
22264-11001702014	14	125,7	114,15	16
22264-11001702015	15	133,7	122,17	16
22264-11001702016	16	141,8	130,2	20
22264-11001702017	17	149,8	138,22	20
22264-11001702018	18	157,8	146,28	20
22264-11001702019	19	165,9	154,33	20
22264-11001702020	20	173,9	162,38	20
22264-11001702021	21	182	170,43	20
22264-11001702022	22	190,1	178,48	20
22264-11001702023	23	198,1	186,53	20
22264-11001702024	24	206,2	194,59	20
22264-11001702025	25	214,2	202,66	20
22264-11001702026	26	222,3	210,72	20
22264-11001702027	27	230,4	218,79	20

Order No.	No. of teeth	D	D1	D3 max.
22264-11001702028	28	238,4	226,85	20
22264-11001702029	29	246,5	234,92	20
22264-11001702030	30	254,6	243	20
22264-11001702031	31	262,6	251,08	25
22264-11001702032	32	270,7	259,13	25
22264-11001702033	33	278,8	267,21	25
22264-11001702034	34	286,9	275,28	25
22264-11001702035	35	294,9	283,36	25
22264-11001702036	36	303	291,44	25
22264-11001702037	37	311,1	299,51	25
22264-11001702038	38	319,2	307,59	25
22264-11001702039	39	327,2	315,67	25
22264-11001702040	40	335,3	323,73	25
22264-11001702041	41	345,6	331,82	25
22264-11001702042	42	353,7	339,9	25
22264-11001702043	43	361,7	347,98	25
22264-11001702044	44	369,8	356,06	25
22264-11001702045	45	377,9	364,12	25
22264-11001702046	46	386	372,21	25
22264-11001702047	47	394,1	380,29	25

Sprockets single 1“ x 17.02 mm

DIN ISO 606

Order No.	No. of teeth	D	D1	D3 max.
22264-11001702048	48	402,1	388,36	25
22264-11001702049	49	410,2	396,44	25
22264-11001702050	50	418,3	404,52	25
22264-11001702051	51	426,4	412,6	30
22264-11001702052	52	434,5	420,67	30
22264-11001702053	53	442,5	428,75	30
22264-11001702054	54	450,6	436,85	30
22264-11001702055	55	458,7	444,93	30
22264-11001702056	56	466,8	453,01	30
22264-11001702057	57	474,9	461,07	30
22264-11001702058	58	482,9	469,16	30
22264-11001702060	60	499,1	485,32	30
22264-11001702062	62	515,3	501,5	30
22264-11001702064	64	531,4	517,65	30
22264-11001702065	65	539,5	525,73	30
22264-11001702068	68	563,8	549,98	30
22264-11001702070	70	579,9	566,14	30
22264-11001702072	72	596,1	582,32	30
22264-11001702075	75	620,3	606,55	30
22264-11001702076	76	628,4	614,65	30
22264-11001702078	78	644,6	630,8	30
22264-11001702080	80	660,7	646,96	30
22264-11001702085	85	701,2	687,4	30
22264-11001702090	90	741,63	727,81	30
22264-11001702095	95	782	768,22	30
22264-11001702100	100	822,4	808,63	30
22264-11001702110	110	903,3	889,48	30
22264-11001702114	114	935,6	921,82	30
22264-11001702120	120	984,1	970,33	30
22264-11001702125	125	1024,5	1010,73	30

Idler sprockets with ball bearing

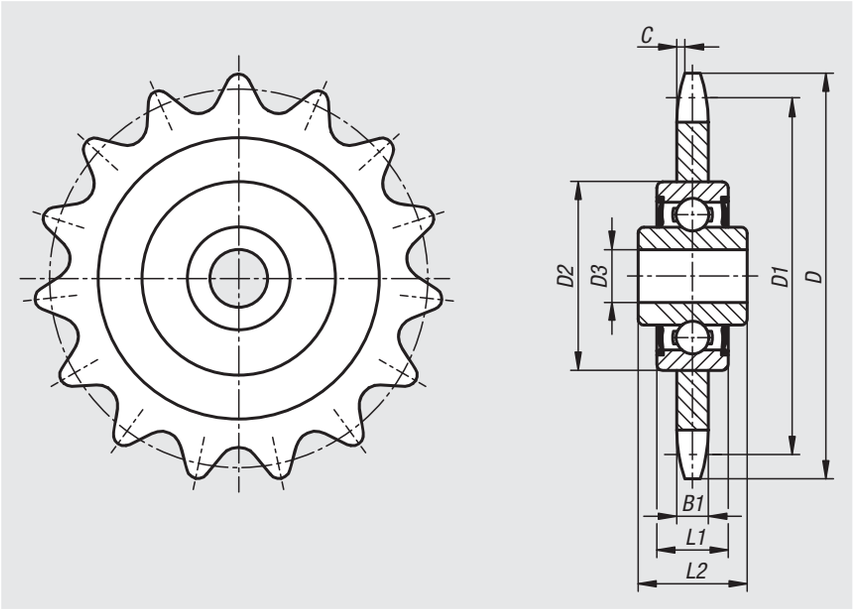

Material:
Sprocket steel C45.
Ball bearing made from ball-bearing steel.

Version:
Sprocket black oxidised.

Sample order:
nlm 22280-038073221

Note:
Ready-to-install idler sprockets complete with ball bearing. For DIN ISO 606 roller chains. The ball bearings are sealed both sides, permanently lubricated and therefore maintenance-free.

Temperature range:
-20°C to +120°C.

Order No.	ISO No.	Pitch inch	Pitch mm	No. of teeth	D	D1	D2	D3	B1	L1	L2	C
22280-038073221	06 B-1	3/8 x 7/32	9,525 x 5,72	21	67,6	63,91	40	16	5,3	12	18,3	1
22280-038073222	06 B-1	3/8 x 7/32	9,525 x 5,72	22	70,6	66,93	40	16	5,3	12	18,3	1
22280-012051614	08 B-1	1/2 x 5/16	12,7 x 7,75	14	61,9	57,07	40	16	7,2	12	18,3	1,3
22280-012051616	08 B-1	1/2 x 5/16	12,7 x 7,75	16	69,9	65,1	40	16	7,2	12	18,3	1,3
22280-012051618	08 B-1	1/2 x 5/16	12,7 x 7,75	18	78	73,14	40	16	7,2	12	18,3	1,3
22280-058030814	10 B-1	5/8 x 3/8	15,875 x 9,65	14	78,2	71,34	40	16	9,1	12	18,3	1,6
22280-058030815	10 B-1	5/8 x 3/8	15,875 x 9,65	15	83,2	76,36	40	16	9,1	12	18,3	1,6
22280-058030817	10 B-1	5/8 x 3/8	15,875 x 9,65	17	93,3	86,39	40	16	9,1	12	18,3	1,6
22280-034071613	12 B-1	3/4 x 7/16	19,05 x 11,68	13	87,8	79,59	40	16	11,1	12	18,3	2
22280-034071615	12 B-1	3/4 x 7/16	19,05 x 11,68	15	99,8	91,63	40	16	11,1	12	18,3	2
22280-100170212	16 B-1	1 x 17,02mm	25,4 x 17,02	12	109,7	98,14	47	20	16,2	14	17,7	2,5

Mounting screws

for idler sprockets

Material:
Steel C45.

Version:
galvanized.

Sample order:
nlm 22280-1216

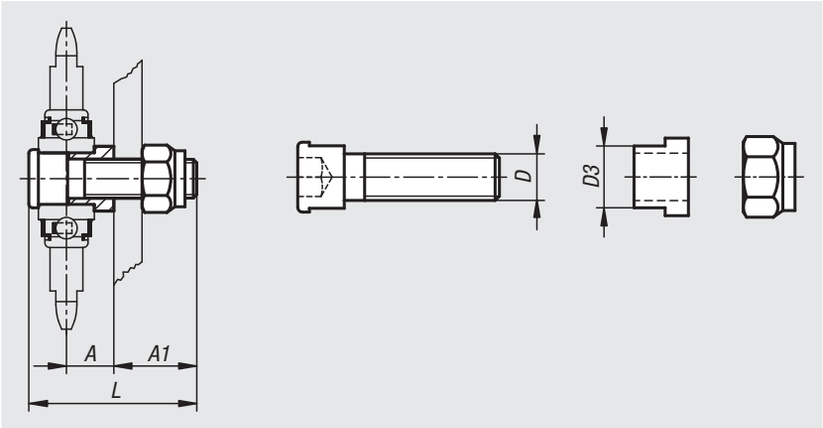

Order No.	A	A1	D	D3	L	Suitable for
22280-1216	15	25	M12	16	52	idler sprocket to ISO 12 B-1
22280-1620	25	28	M16	20	66	idler sprocket from ISO 16 B-1

Spur gears in steel, module 1

toothing milled, straight teeth, engagement angle 20°

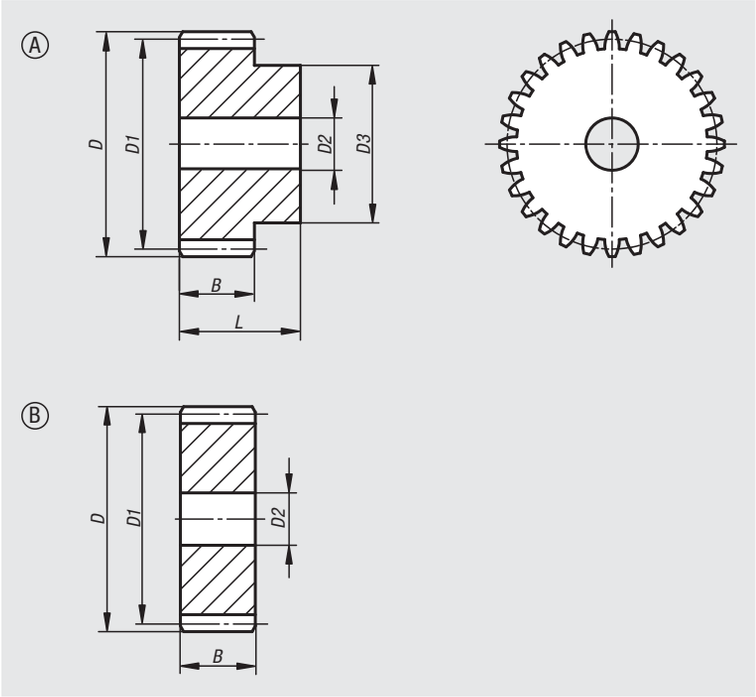

Material:
Steel 1.0503 (C45).

Version:
Milled toothing, straight teeth.
Engagement angle 20°, bright.

Sample order:
nlm 22400-0110150012

Note:
Up to 70 teeth with hub one side, from 72 teeth disc form.
The spur gears have a centre or pilot hole.

Drawing reference:
Form A: with hub
Form B: without hub

Order No.	Form	No. of teeth	D	D1	D2	D3	B	L
22400-0110150012	A	12	14	12	-	9	15	25
22400-0110150013	A	13	15	13	-	10	15	25
22400-0110150014	A	14	16	14	-	11	15	25
22400-0110150015	A	15	17	15	-	12	15	25
22400-0110150016	A	16	18	16	-	13	15	25
22400-0110150017	A	17	19	17	-	14	15	25
22400-0110150018	A	18	20	18	8	15	15	25
22400-0110150019	A	19	21	19	8	15	15	25
22400-0110150020	A	20	22	20	8	16	15	25
22400-0110150021	A	21	23	21	8	16	15	25
22400-0110150022	A	22	24	22	8	16	15	25
22400-0110150023	A	23	25	23	8	18	15	25
22400-0110150024	A	24	26	24	10	20	15	25
22400-0110150025	A	25	27	25	10	20	15	25
22400-0110150026	A	26	28	26	10	20	15	25
22400-0110150027	A	27	29	27	10	20	15	25
22400-0110150028	A	28	30	28	10	20	15	25
22400-0110150029	A	29	31	29	10	20	15	25
22400-0110150030	A	30	32	30	10	20	15	25
22400-0110150031	A	31	33	31	10	25	15	25
22400-0110150032	A	32	34	32	10	25	15	25
22400-0110150033	A	33	35	33	10	25	15	25
22400-0110150034	A	34	36	34	10	25	15	25
22400-0110150035	A	35	37	35	10	25	15	25
22400-0110150036	A	36	38	36	10	25	15	25
22400-0110150037	A	37	39	37	10	25	15	25
22400-0110150038	A	38	40	38	10	25	15	25

Spur gears in steel, module 1

toothing milled, straight teeth, engagement angle 20°

Order No.	Form	No. of teeth	D	D1	D2	D3	B	L
22400-0110150039	A	39	41	39	10	25	15	25
22400-0110150040	A	40	42	40	10	25	15	25
22400-0110150041	A	41	43	41	10	30	15	25
22400-0110150042	A	42	44	42	10	30	15	25
22400-0110150043	A	43	45	43	10	30	15	25
22400-0110150044	A	44	46	44	10	30	15	25
22400-0110150045	A	45	47	45	10	30	15	25
22400-0110150046	A	46	48	46	10	30	15	25
22400-0110150047	A	47	49	47	10	30	15	25
22400-0110150048	A	48	50	48	10	30	15	25
22400-0110150049	A	49	51	49	10	30	15	25
22400-0110150050	A	50	52	50	12	30	15	25
22400-0110150051	A	51	53	51	12	40	15	25
22400-0110150052	A	52	54	52	12	40	15	25
22400-0110150053	A	53	55	53	12	40	15	25
22400-0110150054	A	54	56	54	12	40	15	25
22400-0110150055	A	55	57	55	12	40	15	25
22400-0110150056	A	56	58	56	12	40	15	25
22400-0110150057	A	57	59	57	12	40	15	25
22400-0110150058	A	58	60	58	12	40	15	25
22400-0110150059	A	59	61	59	12	40	15	25
22400-0110150060	A	60	62	60	12	40	15	25
22400-0110150061	A	61	63	61	12	50	15	25
22400-0110150062	A	62	64	62	12	50	15	25
22400-0110150063	A	63	65	63	12	50	15	25
22400-0110150064	A	64	66	64	12	50	15	25
22400-0110150065	A	65	67	65	12	50	15	25
22400-0110150066	A	66	68	66	12	50	15	25
22400-0110150067	A	67	69	67	12	50	15	25
22400-0110150068	A	68	70	68	12	50	15	25
22400-0110150069	A	69	71	69	12	50	15	25
22400-0110150070	A	70	72	70	12	50	15	25

Order No.	Form	No. of teeth	D	D1	D2	B
22400-0210150072	B	72	74	72	12	15
22400-0210150075	B	75	77	75	12	15
22400-0210150076	B	76	78	76	12	15
22400-0210150080	B	80	82	80	12	15
22400-0210150085	B	85	87	85	12	15
22400-0210150090	B	90	92	90	12	15
22400-0210150095	B	95	97	95	12	15
22400-0210150100	B	100	102	100	12	15
22400-0210150110	B	110	112	110	12	15
22400-0210150114	B	114	116	114	12	15
22400-0210150120	B	120	122	120	12	15
22400-0210150127	B	127	129	127	12	15

Spur gears in steel, module 1.5

toothing milled, straight teeth, engagement angle 20°

Material:
Steel 1.0503 (C45).

Version:
Milled toothing, straight teeth.
Engagement angle 20°, bright.

Sample order:
nlm 22400-0115170012

Note:
Up to 70 teeth with hub one side, from 72 teeth disc form.
The spur gears have a centre or pilot hole.

Drawing reference:
Form A: with hub
Form B: without hub

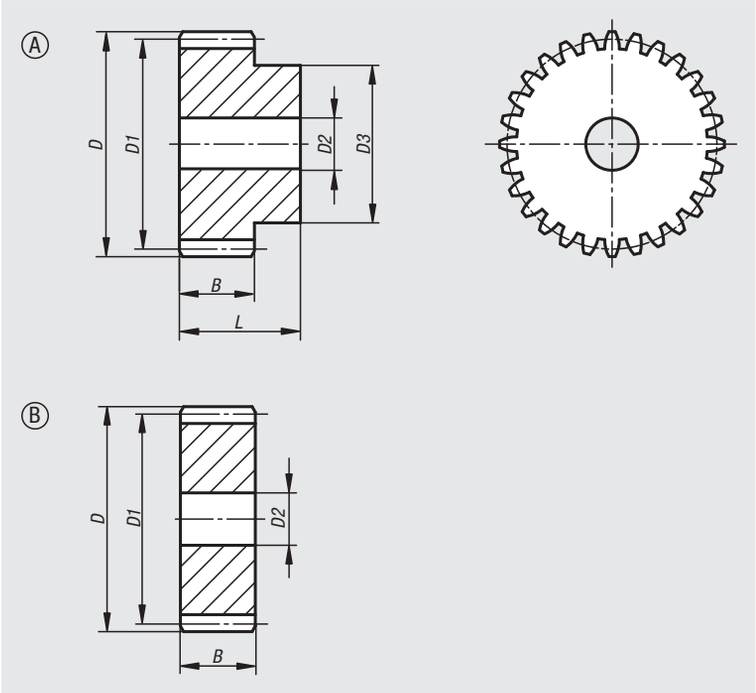

Order No.	Form	No. of teeth	D	D1	D2	D3	B	L
22400-0115170012	A	12	21	18	8	14	17	30
22400-0115170013	A	13	22,5	19,5	8	15	17	30
22400-0115170014	A	14	24	21	8	17	17	30
22400-0115170015	A	15	25,5	22,5	8	18	17	30
22400-0115170016	A	16	27	24	8	19	17	30
22400-0115170017	A	17	28,5	25,5	8	20	17	30
22400-0115170018	A	18	30	27	8	20	17	30
22400-0115170019	A	19	31,5	28,5	8	20	17	30
22400-0115170020	A	20	33	30	8	25	17	30
22400-0115170021	A	21	34,5	31,5	10	25	17	30
22400-0115170022	A	22	36	33	10	25	17	30
22400-0115170023	A	23	37,5	34,5	10	25	17	30
22400-0115170024	A	24	39	36	10	25	17	30
22400-0115170025	A	25	40,5	37,5	10	25	17	30
22400-0115170026	A	26	42	39	12	30	17	30
22400-0115170027	A	27	43,5	40,5	12	30	17	30
22400-0115170028	A	28	45	42	12	30	17	30
22400-0115170029	A	29	46,5	43,5	12	30	17	30
22400-0115170030	A	30	48	45	12	30	17	30
22400-0115170031	A	31	49,5	46,5	12	35	17	30
22400-0115170032	A	32	51	48	12	35	17	30
22400-0115170033	A	33	52,5	49,5	12	35	17	30
22400-0115170034	A	34	54	51	12	35	17	30
22400-0115170035	A	35	55,5	52,5	12	35	17	30
22400-0115170036	A	36	57	54	12	35	17	30
22400-0115170037	A	37	58,5	55,5	12	40	17	30
22400-0115170038	A	38	60	57	12	40	17	30

Spur gears in steel, module 1.5

toothing milled, straight teeth, engagement angle 20°

Order No.	Form	No. of teeth	D	D1	D2	D3	B	L
22400-0115170039	A	39	61,5	58,5	12	40	17	30
22400-0115170040	A	40	63	60	12	40	17	30
22400-0115170041	A	41	64,5	61,5	12	40	17	30
22400-0115170042	A	42	66	63	12	50	17	30
22400-0115170043	A	43	67,5	64,5	12	50	17	30
22400-0115170044	A	44	69	66	12	50	17	30
22400-0115170045	A	45	70,5	67,5	12	50	17	30
22400-0115170046	A	46	72	69	14	50	17	30
22400-0115170047	A	47	73,5	70,5	14	50	17	30
22400-0115170048	A	48	75	72	14	50	17	30
22400-0115170049	A	49	76,5	73,5	14	50	17	30
22400-0115170050	A	50	78	75	14	50	17	30
22400-0115170051	A	51	79,5	76,5	14	60	17	30
22400-0115170052	A	52	81	78	14	60	17	30
22400-0115170053	A	53	82,5	79,5	14	60	17	30
22400-0115170054	A	54	84	81	14	60	17	30
22400-0115170055	A	55	85,5	82,5	14	60	17	30
22400-0115170056	A	56	87	84	16	60	17	30
22400-0115170057	A	57	88,5	85,5	16	60	17	30
22400-0115170058	A	58	90	87	16	60	17	30
22400-0115170059	A	59	91,5	88,5	16	60	17	30
22400-0115170060	A	60	93	90	16	60	17	30
22400-0115170061	A	61	94,5	91,5	16	70	17	30
22400-0115170062	A	62	96	93	16	70	17	30
22400-0115170063	A	63	97,5	94,5	16	70	17	30
22400-0115170064	A	64	99	96	16	70	17	30
22400-0115170065	A	65	100,5	97,5	16	70	17	30
22400-0115170066	A	66	102	99	16	70	17	30
22400-0115170067	A	67	103,5	100,5	16	70	17	30
22400-0115170068	A	68	105	102	16	70	17	30
22400-0115170069	A	69	106,5	103,5	16	70	17	30
22400-0115170070	A	70	108	105	16	70	17	30

Order No.	Form	No. of teeth	D	D1	D2	B
22400-0215170072	B	72	111	108	16	17
22400-0215170075	B	75	115,5	112,5	16	17
22400-0215170076	B	76	117	114	16	17
22400-0215170080	B	80	123	120	16	17
22400-0215170085	B	85	130,5	127,5	16	17
22400-0215170090	B	90	138	135	16	17
22400-0215170095	B	95	145,5	142,5	16	17
22400-0215170100	B	100	153	150	16	17
22400-0215170110	B	110	168	165	16	17
22400-0215170114	B	114	174	171	16	17
22400-0215170120	B	120	183	180	16	17
22400-0215170127	B	127	193,5	190,5	16	17

Spur gears in steel, module 2

toothing milled, straight teeth, engagement angle 20°

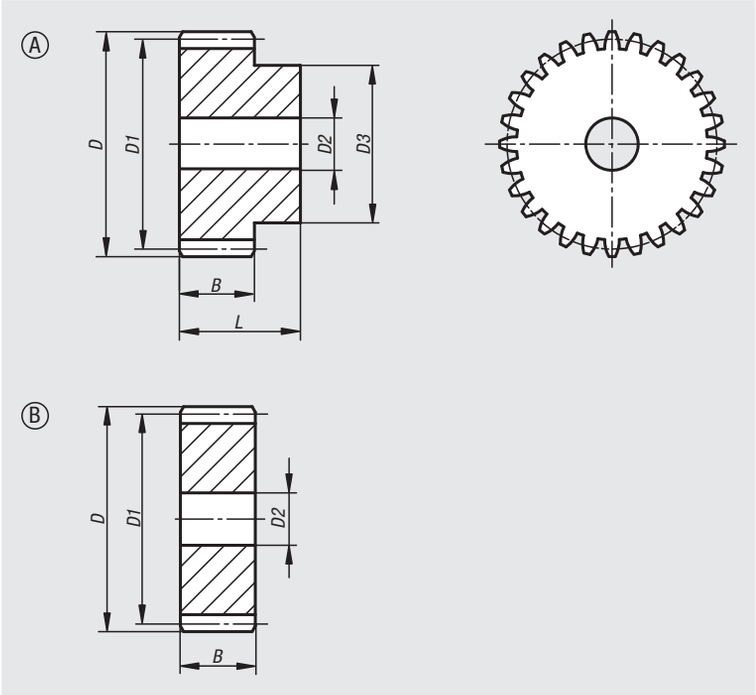

Material:
Steel 1.0503 (C45).

Version:
Milled toothing, straight teeth.
Engagement angle 20°, bright.

Sample order:
nlm 22400-0120200012

Note:
Up to 70 teeth with hub one side, from 72 teeth disc form.
The spur gears have a centre or pilot hole.

Drawing reference:
Form A: with hub
Form B: without hub

Order No.	Form	No. of teeth	D	D1	D2	D3	B	L
22400-0120200012	A	12	28	24	10	18	20	35
22400-0120200013	A	13	30	26	10	20	20	35
22400-0120200014	A	14	32	28	10	22	20	35
22400-0120200015	A	15	34	30	10	24	20	35
22400-0120200016	A	16	36	32	10	25	20	35
22400-0120200017	A	17	38	34	10	25	20	35
22400-0120200018	A	18	40	36	10	25	20	35
22400-0120200019	A	19	42	38	10	25	20	35
22400-0120200020	A	20	44	40	10	30	20	35
22400-0120200021	A	21	46	42	12	30	20	35
22400-0120200022	A	22	48	44	12	30	20	35
22400-0120200023	A	23	50	46	12	30	20	35
22400-0120200024	A	24	52	48	12	35	20	35
22400-0120200025	A	25	54	50	12	35	20	35
22400-0120200026	A	26	56	52	12	40	20	35
22400-0120200027	A	27	58	54	12	40	20	35
22400-0120200028	A	28	60	56	12	40	20	35
22400-0120200029	A	29	62	58	14	40	20	35
22400-0120200030	A	30	64	60	14	40	20	35
22400-0120200031	A	31	66	62	14	45	20	35
22400-0120200032	A	32	68	64	14	45	20	35
22400-0120200033	A	33	70	66	14	45	20	35
22400-0120200034	A	34	72	68	14	45	20	35
22400-0120200035	A	35	74	70	14	45	20	35
22400-0120200036	A	36	76	72	14	45	20	35
22400-0120200037	A	37	78	74	14	50	20	35
22400-0120200038	A	38	80	76	14	50	20	35

Spur gears in steel, module 2

toothing milled, straight teeth, engagement angle 20°

Order No.	Form	No. of teeth	D	D1	D2	D3	B	L
22400-0120200039	A	39	82	78	14	50	20	35
22400-0120200040	A	40	84	80	14	50	20	35
22400-0120200041	A	41	86	82	16	55	20	35
22400-0120200042	A	42	88	84	16	55	20	35
22400-0120200043	A	43	90	86	16	55	20	35
22400-0120200044	A	44	92	88	16	60	20	35
22400-0120200045	A	45	94	90	16	60	20	35
22400-0120200046	A	46	96	92	16	60	20	35
22400-0120200047	A	47	98	94	16	70	20	35
22400-0120200048	A	48	100	96	16	70	20	35
22400-0120200049	A	49	102	98	16	70	20	35
22400-0120200050	A	50	104	100	16	70	20	35
22400-0120200051	A	51	106	102	16	70	20	35
22400-0120200052	A	52	108	104	16	70	20	35
22400-0120200053	A	53	110	106	16	70	20	35
22400-0120200054	A	54	112	108	16	70	20	35
22400-0120200055	A	55	114	110	16	70	20	35
22400-0120200056	A	56	116	112	16	70	20	35
22400-0120200057	A	57	118	114	16	70	20	35
22400-0120200058	A	58	120	116	16	70	20	35
22400-0120200059	A	59	122	118	16	70	20	35
22400-0120200060	A	60	124	120	16	70	20	35
22400-0120200061	A	61	126	122	16	80	20	35
22400-0120200062	A	62	128	124	16	80	20	35
22400-0120200063	A	63	130	126	16	80	20	35
22400-0120200064	A	64	132	128	16	80	20	35
22400-0120200065	A	65	134	130	16	80	20	35
22400-0120200066	A	66	136	132	16	80	20	35
22400-0120200067	A	67	138	134	16	80	20	35
22400-0120200068	A	68	140	136	16	80	20	35
22400-0120200069	A	69	142	138	16	80	20	35
22400-0120200070	A	70	144	140	16	80	20	35

Order No.	Form	No. of teeth	D	D1	D2	B
22400-0220200072	B	72	148	144	16	20
22400-0220200075	B	75	154	150	20	20
22400-0220200076	B	76	156	152	20	20
22400-0220200080	B	80	164	160	20	20
22400-0220200085	B	85	174	170	20	20
22400-0220200090	B	90	184	180	20	20
22400-0220200095	B	95	194	190	20	20
22400-0220200100	B	100	204	200	20	20
22400-0220200110	B	110	224	220	20	20
22400-0220200114	B	114	232	228	20	20
22400-0220200120	B	120	244	240	20	20
22400-0220200127	B	127	258	254	20	20

Spur gears in steel, module 2.5

toothing milled, straight teeth, engagement angle 20°

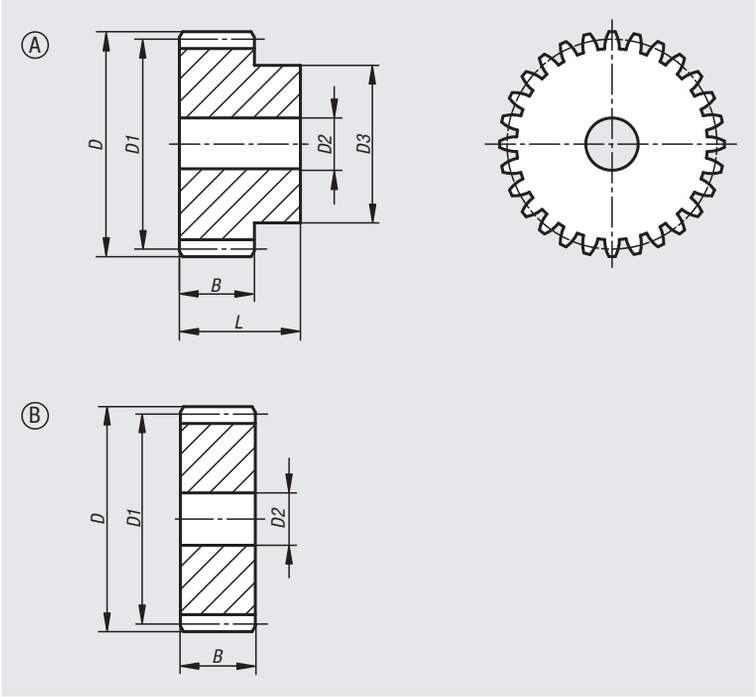

Material:
Steel 1.0503 (C45).

Version:
Milled toothing, straight teeth.
Engagement angle 20°, bright.

Note for ordering:
22400-0125250012

Note:
Up to 60 teeth with hub, from 65 teeth disc form.

Drawing reference:
Form A: with hub
Form B: without hub

Order No.	Form	No. of teeth	D	D1	D2	D3	B	L
22400-0125250012	A	12	35	30	10	22	25	45
22400-0125250013	A	13	37,5	32,5	10	25	25	45
22400-0125250014	A	14	40	35	10	28	25	45
22400-0125250015	A	15	42,5	37,5	10	30	25	45
22400-0125250016	A	16	45	40	12	32	25	45
22400-0125250017	A	17	47,5	42,5	12	35	25	45
22400-0125250018	A	18	50	45	12	35	25	45
22400-0125250019	A	19	52,5	47,5	12	35	25	45
22400-0125250020	A	20	55	50	12	40	25	45
22400-0125250021	A	21	57,5	52,5	14	40	25	45
22400-0125250022	A	22	60	55	14	45	25	45
22400-0125250023	A	23	62,5	57,5	14	45	25	45
22400-0125250024	A	24	65	60	14	45	25	45
22400-0125250025	A	25	67,5	62,5	14	50	25	45
22400-0125250026	A	26	70	65	14	50	25	45
22400-0125250027	A	27	72,5	67,5	14	50	25	45
22400-0125250028	A	28	75	70	14	50	25	45
22400-0125250029	A	29	77,5	72,5	14	50	25	45
22400-0125250030	A	30	80	75	14	55	25	45

Spur gears in steel, module 2.5

toothing milled, straight teeth, engagement angle 20°

Order No.	Form	No. of teeth	D	D1	D2	D3	B	L
22400-0125250031	A	31	82,5	77,5	16	55	25	45
22400-0125250032	A	32	85	80	16	55	25	45
22400-0125250033	A	33	87,5	82,5	16	55	25	45
22400-0125250034	A	34	90	85	16	55	25	45
22400-0125250035	A	35	92,5	87,5	16	60	25	45
22400-0125250036	A	36	95	90	16	60	25	45
22400-0125250037	A	37	97,5	92,5	16	60	25	45
22400-0125250038	A	38	100	95	16	60	25	45
22400-0125250039	A	39	102,5	97,5	16	60	25	45
22400-0125250040	A	40	105	100	16	70	25	45
22400-0125250041	A	41	107,5	102,5	16	70	25	45
22400-0125250042	A	42	110	105	16	70	25	45
22400-0125250043	A	43	112,5	107,5	16	70	25	45
22400-0125250044	A	44	115	110	16	70	25	45
22400-0125250045	A	45	117,5	112,5	16	70	25	45
22400-0125250046	A	46	120	115	20	70	25	45
22400-0125250047	A	47	122,5	117,5	20	80	25	45
22400-0125250048	A	48	125	120	20	80	25	45
22400-0125250049	A	49	127,5	122,5	20	80	25	45
22400-0125250050	A	50	130	125	20	80	25	45
22400-0125250051	A	51	132,5	127,5	20	80	25	45
22400-0125250052	A	52	135	130	20	90	25	45
22400-0125250053	A	53	137,5	132,5	20	90	25	45
22400-0125250054	A	54	140	135	20	90	25	45
22400-0125250055	A	55	142,5	137,5	20	90	25	45
22400-0125250056	A	56	145	140	20	100	25	45
22400-0125250057	A	57	147,5	142,5	20	100	25	45
22400-0125250058	A	58	150	145	20	100	25	45
22400-0125250059	A	59	152,5	147,5	20	100	25	45
22400-0125250060	A	60	155	150	20	100	25	45

Order No.	Form	No. of teeth	D	D1	D2	B
22400-0225250065	B	65	167,5	162,5	20	25
22400-0225250070	B	70	180	175	20	25
22400-0225250072	B	72	185	180	20	25
22400-0225250075	B	75	192,5	187,5	20	25
22400-0225250076	B	76	195	190	20	25
22400-0225250080	B	80	205	200	25	25
22400-0225250085	B	85	217,5	212,5	25	25
22400-0225250090	B	90	230	225	25	25
22400-0225250095	B	95	242,5	237,5	25	25
22400-0225250100	B	100	255	250	25	25
22400-0225250110	B	110	280	275	25	25
22400-0225250114	B	114	290	285	25	25
22400-0225250120	B	120	305	300	25	25
22400-0225250127	B	127	322,5	317,5	25	25

Spur gears in steel, module 3

toothing milled, straight teeth, engagement angle 20°

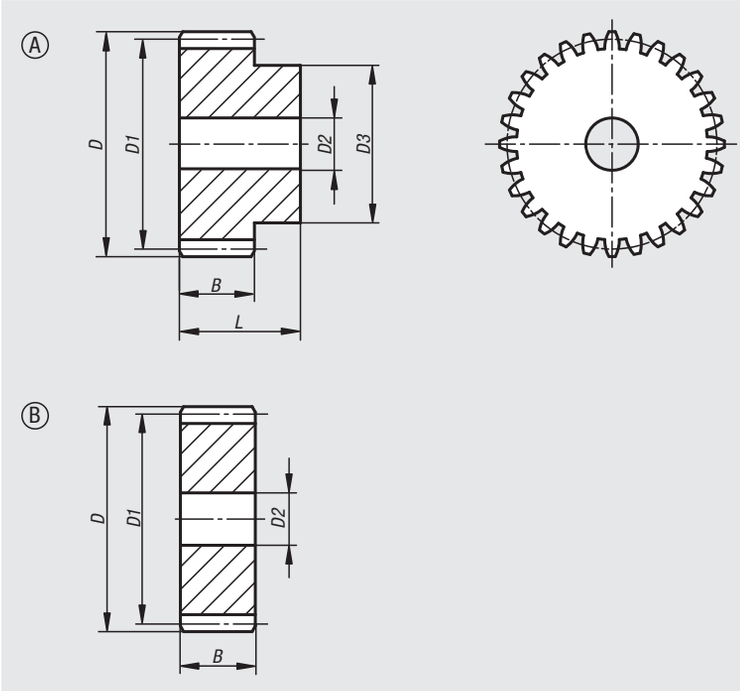

Material:
Steel 1.0503 (C45).

Version:
Milled toothing, straight teeth.
Engagement angle 20°, bright.

Sample order:
nlm 22400-0130300012

Note:
Up to 48 teeth with hub, from 50 teeth disc form.

Drawing reference:
Form A: with hub
Form B: without hub

Order No.	Form	No. of teeth	D	D1	D2	D3	B	L
22400-0130300012	A	12	42	36	12	27	30	50
22400-0130300013	A	13	45	39	12	30	30	50
22400-0130300014	A	14	48	42	12	33	30	50
22400-0130300015	A	15	51	45	12	35	30	50
22400-0130300016	A	16	54	48	14	38	30	50
22400-0130300017	A	17	57	51	14	42	30	50
22400-0130300018	A	18	60	54	14	45	30	50
22400-0130300019	A	19	63	57	14	45	30	50
22400-0130300020	A	20	66	60	14	45	30	50
22400-0130300021	A	21	69	63	16	45	30	50
22400-0130300022	A	22	72	66	16	50	30	50
22400-0130300023	A	23	75	69	16	50	30	50
22400-0130300024	A	24	78	72	16	50	30	50

Spur gears in steel, module 3

toothing milled, straight teeth, engagement angle 20°

Order No.	Form	No. of teeth	D	D1	D2	D3	B	L
22400-0130300025	A	25	81	75	16	60	30	50
22400-0130300026	A	26	84	78	16	60	30	50
22400-0130300027	A	27	87	81	16	60	30	50
22400-0130300028	A	28	90	84	16	60	30	50
22400-0130300029	A	29	93	87	16	60	30	50
22400-0130300030	A	30	96	90	16	60	30	50
22400-0130300031	A	31	99	93	16	60	30	50
22400-0130300032	A	32	102	96	16	70	30	50
22400-0130300033	A	33	105	99	16	70	30	50
22400-0130300034	A	34	108	102	16	70	30	50
22400-0130300035	A	35	111	105	16	70	30	50
22400-0130300036	A	36	114	108	20	70	30	50
22400-0130300037	A	37	117	111	20	70	30	50
22400-0130300038	A	38	120	114	20	80	30	50
22400-0130300039	A	39	123	117	20	80	30	50
22400-0130300040	A	40	126	120	20	80	30	50
22400-0130300041	A	41	129	123	20	80	30	50
22400-0130300042	A	42	132	126	20	80	30	50
22400-0130300043	A	43	135	129	20	80	30	50
22400-0130300044	A	44	138	132	20	90	30	50
22400-0130300045	A	45	141	135	20	90	30	50
22400-0130300046	A	46	144	138	20	90	30	50
22400-0130300047	A	47	147	141	20	100	30	50
22400-0130300048	A	48	150	144	20	100	30	50

Order No.	Form	No. of teeth	D	D1	D2	B
22400-0230300050	B	50	156	150	20	30
22400-0230300052	B	52	162	156	20	30
22400-0230300055	B	55	171	165	20	30
22400-0230300057	B	57	177	171	20	30
22400-0230300060	B	60	186	180	20	30
22400-0230300065	B	65	201	195	20	30
22400-0230300070	B	70	216	210	25	30
22400-0230300072	B	72	222	216	25	30
22400-0230300075	B	75	231	225	25	30
22400-0230300076	B	76	234	228	25	30
22400-0230300080	B	80	246	240	25	30
22400-0230300085	B	85	261	255	25	30
22400-0230300090	B	90	276	270	25	30
22400-0230300095	B	95	291	285	25	30
22400-0230300100	B	100	306	300	25	30
22400-0230300110	B	110	336	330	25	30
22400-0230300114	B	114	348	342	30	30
22400-0230300120	B	120	366	360	30	30
22400-0230300127	B	127	387	381	30	30

Gear racks in steel

toothing milled, straight teeth, engagement angle 20°

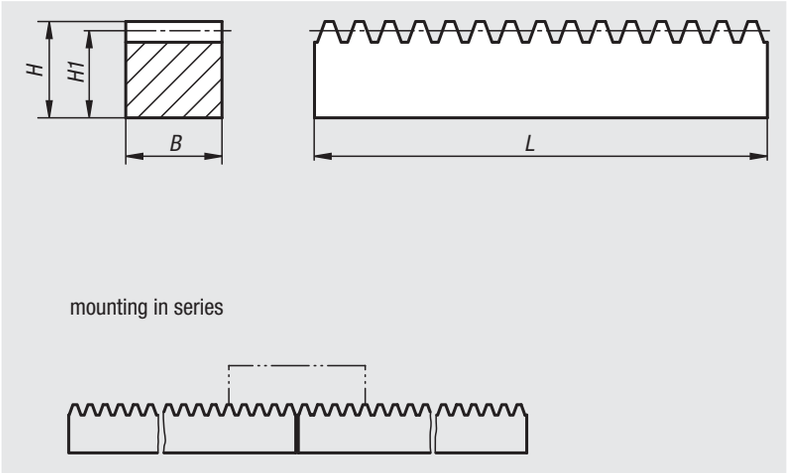

Material:
Steel 1.0503 (C45).

Version:
Milled toothing, straight teeth.
Engagement angle 20°, bright.

Sample order:
nlm 22420-010150X500

Note:
The gear racks are suitable for mounting in series.

Order No.	Module	B	H	H1	L Nom. length	L Actual length
22420-010150X500	1	15	15	14	500	499,51
22420-010150X1000	1	15	15	14	1000	1002,17
22420-010150X2000	1	15	15	14	2000	2001,19
22420-015170X500	1,5	17	17	15,5	500	504,22
22420-015170X1000	1,5	17	17	15,5	1000	1003,74
22420-015170X2000	1,5	17	17	15,5	2000	2002,77
22420-020200X500	2	20	20	18	500	502,65
22420-020200X1000	2	20	20	18	1000	1005,31
22420-020200X2000	2	20	20	18	2000	2004,34
22420-025250X500	2,5	25	25	22,5	500	502,65
22420-025250X1000	2,5	25	25	22,5	1000	1005,31
22420-025250X2000	2,5	25	25	22,5	2000	2002,77
22420-030300X500	3	30	30	27	500	508,94
22420-030300X1000	3	30	30	27	1000	1008,45
22420-030300X2000	3	30	30	27	2000	2007,48

Gear racks in steel

toothing milled, straight teeth, engagement angle 20°

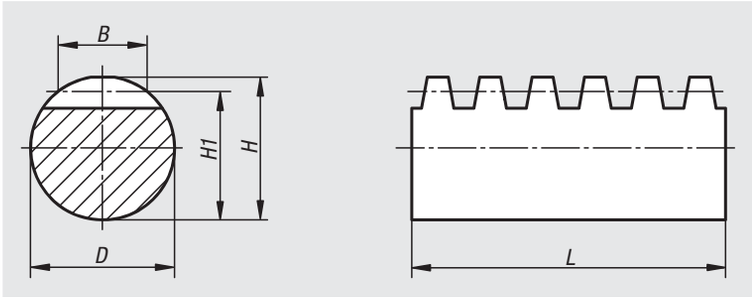

Material:
Steel 1.0503 (C45).

Version:
Milled toothing, straight teeth.
Engagement angle 20°, bright.
Outside diameter ground, tolerance h6.

Sample order:
nlm 22425-010060X500

Note:
The gear rack teeth are cut using a hob mill.
This results in minus tolerances for dimensions H and H1:
up to module 2: -0.2 mm.
module 2.5 to 3: -0.3 mm.

Order No.	Module	B	D	H	H1	L
22425-010060X500	1	6	10	10	9	500
22425-010060X1000	1	6	10	10	9	1000
22425-010060X2000	1	6	10	10	9	2000
22425-015090X500	1,5	9	15	15	13,5	500
22425-015090X1000	1,5	9	15	15	13,5	1000
22425-015090X2000	1,5	9	15	15	13,5	2000
22425-020120X500	2	12	20	20	18	500
22425-020120X1000	2	12	20	20	18	1000
22425-020120X2000	2	12	20	20	18	2000
22425-025150X500	2,5	15	25	25	22,5	500
22425-025150X1000	2,5	15	25	25	22,5	1000
22425-025150X2000	2,5	15	25	25	22,5	2000
22425-030180X500	3	18	30	30	27	500
22425-030180X1000	3	18	30	30	27	1000
22425-030180X2000	3	18	30	30	27	2000

Bevel gears in steel, ratio 1:1

toothing milled, straight teeth, engagement angle 20°

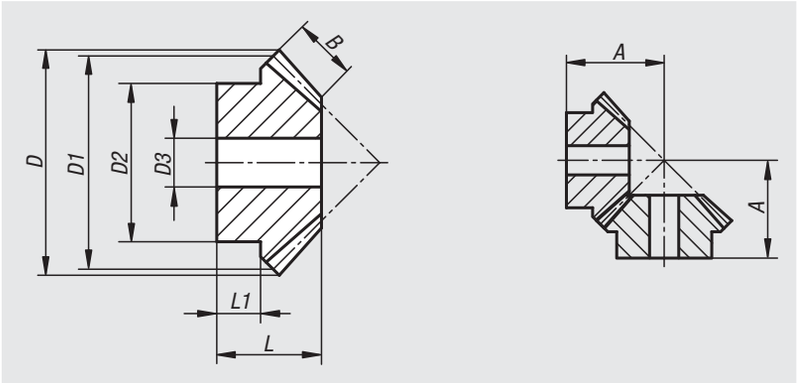

Material:
Steel 1.0503 (C45).

Version:
Milled toothing, straight teeth.
Engagement angle 20°, bright.
Axis angle = 90°.

Sample order:
nlm 22430-010110016

Note for ordering:
Bevel gears are supplied singly. To obtain a pair of bevel gears, please order the specified mating gear as well.

Order No.	Transmission ratio	Module	No. of teeth	A	B	D	D1	D2	D3	L	L1	matching opposing gear
22430-010110016	1:1	1	16	16	4	17,4	16	13,3	4	11,2	6,7	22430-010110016
22430-010110019	1:1	1	19	18	4	20,4	19	15,3	4	11,8	6,6	22430-010110019
22430-010110022	1:1	1	22	20	4,7	23,4	22	16,3	5	12,8	6,1	22430-010110022
22430-010110026	1:1	1	26	22	5,5	27,4	26	20,3	5	13,3	7	22430-010110026
22430-010110030	1:1	1	30	26	6,4	31,4	30	20,3	5	16	8	22430-010110030
22430-015110016	1:1	1,5	16	26	6	26,1	24	20,3	8	18,9	12,2	22430-015110016
22430-015110019	1:1	1,5	19	30	7	30,6	28,5	20,3	8	21,3	11,6	22430-015110019
22430-015110022	1:1	1,5	22	33	7,5	35,1	33	25,3	8	22,5	12,7	22430-015110022
22430-015110026	1:1	1,5	26	36	8,5	41,1	39	28,3	8	23,2	12	22430-015110026
22430-015110030	1:1	1,5	30	42	10	47,1	45	30	12	27,2	12,1	22430-015110030
22430-020110016	1:1	2	16	33	8	34,8	32	25,3	8	23,5	13,6	22430-020110016
22430-020110019	1:1	2	19	36	9	40,8	38	25,3	8	24,2	12	22430-020110019
22430-020110022	1:1	2	22	42	10	46,8	44	30,3	10	27,9	14	22430-020110022
22430-020110026	1:1	2	26	48	12	54,8	52	35,3	12	31,4	13,7	22430-020110026
22430-020110030	1:1	2	30	54	13	62,8	60	40,3	12	34,1	17	22430-020110030
22430-025110016	1:1	2,5	16	40	10	43,5	40	30,3	12	28,1	15,2	22430-025110016
22430-025110019	1:1	2,5	19	42	11	51	47,5	35,3	12	27,1	13	22430-025110019
22430-025110022	1:1	2,5	22	48	12	58,5	55	45,3	12	30,1	15,7	22430-025110022
22430-025110026	1:1	2,5	26	54	15	68,5	65	45,3	15	33,2	16	22430-025110026
22430-025110030	1:1	2,5	30	64	16	78,5	75	50,3	15	39	20	22430-025110030
22430-030110016	1:1	3	16	46	12	52,2	48	40,3	12	31,7	18,1	22430-030110016
22430-030110019	1:1	3	19	54	13	61,2	57	40,3	14	36	17,1	22430-030110019
22430-030110022	1:1	3	22	58	15	70,2	66	50,3	15	36,9	17,1	22430-030110022
22430-030110026	1:1	3	26	64	17	82,2	78	50,3	15	38,4	18	22430-030110026
22430-030110030	1:1	3	30	74	19	94,2	90	60,3	20	43,8	22	22430-030110030

Bevel gears in steel, ratio 1:2

toothing milled, straight teeth, engagement angle 20°

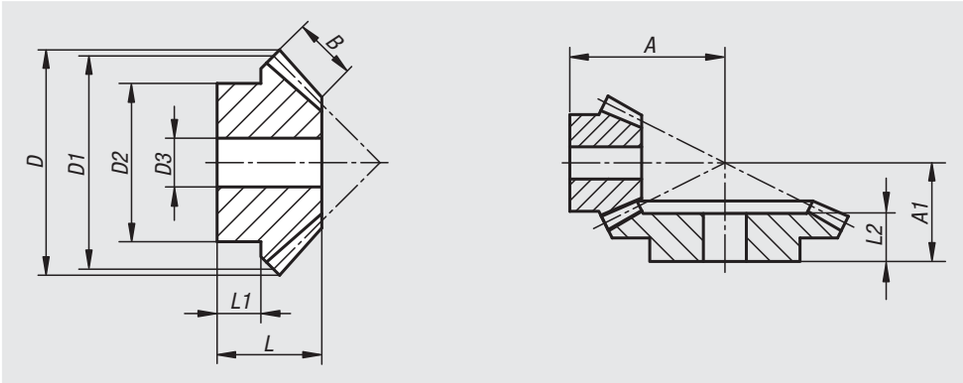

Material:
Steel 1.0503 (C45).

Version:
Milled toothing, straight teeth.
Engagement angle 20°, bright.
Axis angle = 90°.

Sample order:
nlm 22430-010120015

Note for ordering:
Bevel gears are supplied singly. To obtain a pair of bevel gears, please order the specified mating gear as well.

Order No.	Transmission ratio	Module	No. of teeth	A	A1	B	D	D1	D2	D3	L	L1	L2	matching opposing gear
22430-010120015	1:2	1	15	22	-	5	17,4	15	13,3	4	11,9	6,6	-	22430-010120030
22430-010120030	1:2	1	30	-	20	5	30,6	30	20,3	5	15,1	9	14	22430-010120015
22430-015120015	1:2	1,5	15	35	-	9	26,1	22,5	20,3	8	21,1	12	-	22430-015120030
22430-015120030	1:2	1,5	30	-	32	9	45,9	45	32,3	8	25,2	16	23	22430-015120015
22430-020120015	1:2	2	15	45	-	11,5	34,8	30	25,3	8	26	13,8	-	22430-020120030
22430-020120030	1:2	2	30	-	39	11,5	61,2	60	40,3	12	29,8	18	27	22430-020120015
22430-025120015	1:2	2,5	15	55	-	15	43,5	37,5	32,3	12	31,8	16,2	-	22430-025120030
22430-025120030	1:2	2,5	30	-	45	15	76,5	75	45,3	15	33,7	20	30	22430-025120015
22430-030120015	1:2	3	15	66	-	17	52,2	45	40,3	12	37,3	19,8	-	22430-030120030
22430-030120030	1:2	3	30	-	56	17	91,8	90	55,3	15	42,1	25	38	22430-030120015

Bevel gears in steel, ratio 1:3

toothing milled, straight teeth, engagement angle 20°

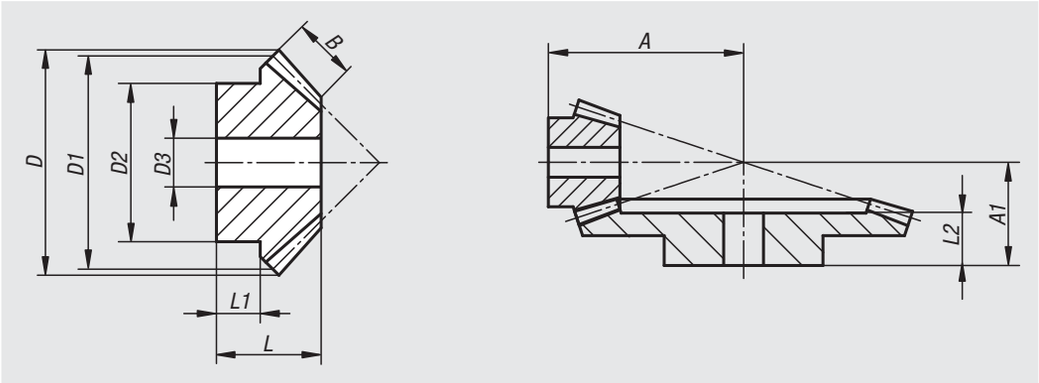

Material:
Steel 1.0503 (C45).

Version:
Milled toothing, straight teeth.
Engagement angle 20°, bright.
Axis angle = 90°.

Sample order:
nlm 22430-010130015

Note for ordering:
Bevel gears are supplied singly. To obtain a pair of bevel gears, please order the specified mating gear as well.

Order No.	Transmission ratio	Module	No. of teeth	A	A1	B	D	D1	D2	D3	L	L1	L2	matching opposing gear
22430-010130015	1:3	1	15	32	-	7,1	17,7	15	13,3	4	16,6	9,3	-	22430-010130045
22430-010130045	1:3	1	45	-	22	7,1	45,3	45	25,3	8	17,1	10	15	22430-010130015
22430-015130015	1:3	1,5	15	46	-	10,5	26,5	22,5	19,3	8	22,6	11,7	-	22430-015130045
22430-015130045	1:3	1,5	45	-	37	10,5	68,1	67,5	45,3	14	29,6	20	27	22430-015130015
22430-020130015	1:3	2	15	60	-	14	35,4	30	25,3	8	28,9	14,2	-	22430-020130045
22430-020130045	1:3	2	45	-	42	14	90,8	90	45,3	15	32,1	20	29	22430-020130015
22430-025130015	1:3	2,5	15	73	-	18	44,2	37,5	32,3	12	34,6	15,9	-	22430-025130045
22430-025130045	1:3	2,5	45	-	52	18	113,4	112,5	60,3	20	39,7	25	36	22430-025130015
22430-030130015	1:3	3	15	88	-	21	53	45	40,3	15	41,3	19,7	-	22430-030130045
22430-030130045	1:3	3	45	-	62	21	136,1	135	60,3	20	47,2	30	42,5	22430-030130015

Bevel gears in steel, ratio 1:4

toothing milled, straight teeth, engagement angle 20°

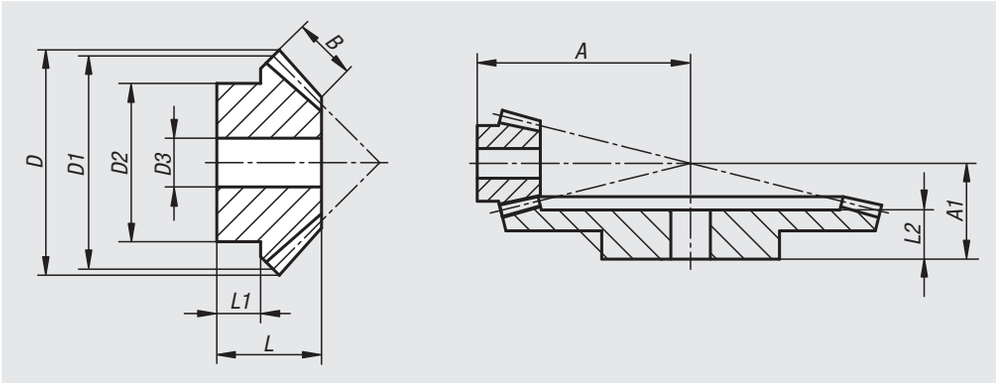

Material:
Steel 1.0503 (C45).

Version:
Milled toothing, straight teeth.
Engagement angle 20°, bright.
Axis angle = 90°.

Sample order:
nlm 22430-010140015

Note for ordering:
Bevel gears are supplied singly. To obtain a pair of bevel gears, please order the specified mating gear as well.

Order No.	Transmission ratio	Module	No. of teeth	A	A1	B	D	D1	D2	D3	L	L1	L2	matching opposing gear
22430-010140015	1:4	1	15	38	-	9,3	17,8	15	13,3	4	17,2	7,7	-	22430-010140060
22430-010140060	1:4	1	60	-	22	9,3	60,3	60	30,3	8	17,1	10	15	22430-010140015
22430-015140015	1:4	1,5	15	57	-	11	26,7	22,5	20,3	8	23	11,7	-	22430-015140060
22430-015140060	1:4	1,5	60	-	42	11	90,4	90	50,3	15	34	25	31	22430-015140015
22430-020140015	1:4	2	15	75	-	16	35,6	30	25,3	8	31	14,4	-	22430-020140060
22430-020140060	1:4	2	60	-	48	16	120,6	120	60,3	16	37,6	25	34	22430-020140015
22430-025140015	1:4	2,5	15	94	-	19	44,5	37,5	32,3	14	38,1	18,4	-	22430-025140060
22430-025140060	1:4	2,5	60	-	58	19	150,7	150	60,3	20	44,8	30	40	22430-025140015
22430-030140015	1:4	3	15	115	-	23	53,3	45	40,3	15	48,1	24,5	-	22430-030140060
22430-030140060	1:4	3	60	-	69	23	180,8	180	80,3	20	53,2	35	48	22430-030140015

Technical information for worm gears

Worm gears right hand

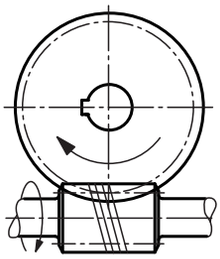

The parts available from the catalogue are right hand. Custom made left hand gears for opposite direction of rotation are only available on request.

Installing the worm wheel

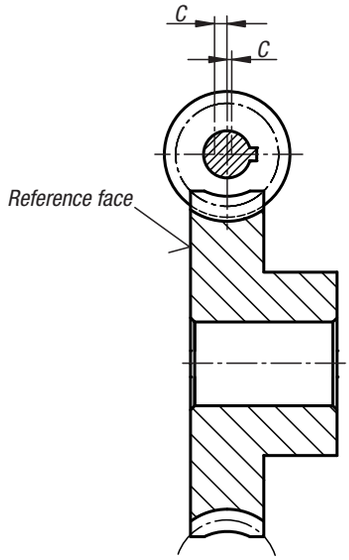

For lateral mounting of the worm wheel, the toleranced reference face is decisive. The lateral tolerance “c” must not exceed 0.15 mm for all centre distances.

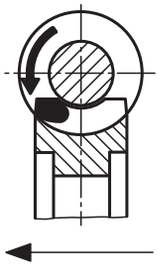

Slide the wheel in the direction of the arrow

Correct marking

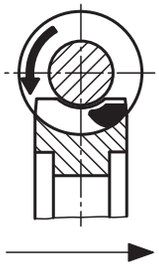

Slide the wheel in the direction of the arrow

Check the contact pattern to ensure that the worm wheel is correctly installed with regard to axial positioning. The contact pattern should tend towards the runout edge of the wheel. When the worm gear is put into reverse, the contact pattern should tend towards the centre.

Important: Some of the slots are not DIN standard. Please observe the specified slot widths.

Efficiency

The efficiency is generally dependent on the following conditions:

- Worm screw gradient angle
- Glide velocity
- Lubricant
- Surface finish
- Installation dimensions

The efficiency improves with increasing axial distance. For reasons of space and economy, plain bearings are often used by smaller centre distances. These have a higher co-efficient of friction compared to ball bearings and can strongly effect the overall efficiency. The specified efficiency values are only valid under optimum conditions.
Start-up efficiency: The lubricating film between the tooth flanks only forms once the transmission is in motion causing the start-up efficiency to be ca. 30% lower than the operating efficiency specified in the catalogue.

Self-locking

Self-locking is influenced by the gradient angle, the surface finish on the flanks, the glide velocity, the lubricant and the resulting heating. There is a difference between dynamic and static self-locking.
Dynamic self-locking: up to 3° gradient angle with grease lubrication; up to 2.5° gradient angle with synthetic oil lubrication.
Static self-locking: from 3° to 5° gradient angle with grease lubrication; from 2.5° to 4.5° gradient angle with synthetic oil lubrication. There is no self-locking by gradient angles over 4.5° or 5°. Shocks and vibrations can hinder the self-locking function. A number of factors relating to lubrication, glide velocity and load can create glide characteristics such that the self-locking function is negatively influenced and for this reason, no guarantees can be made with regard to the self-locking function.

Technical information for worm gears

Torque data and service life

The torque data is based on a screw speed of 2800 rpm. By reduced screw, the torque increases by the following factors:

n1	2800 rpm	1400 rpm	950 rpm	700 rpm	500 rpm	250 rpm	125 rpm
Factor n1	1	1,12	1,2	1,26	1,33	1,49	1,67

A service life of ca. 3000 hours is basic. The following factors are used for a shortened or increased service life:

Service life	approx. 3000 h	approx. 1500 h	approx. 6000 h
Factor SI	1	1,4	0,71

Calculation example (operating conditions not taken into account)

Gear size centre distance 40 mm; transmission ratio 1:35; mineral oil lubrication; screw speed 700 rpm; service life 1500 hours

What output torque does this produce on the worm wheel?

Output torque = T2 (mineral oil) x n (factor) x L (factor) <= breaking point

= 37.2 Nm x 1.26 x 1.4

= 65.6 Nm

Warning! The output torque is limited by attainment of the yield point of the gear wheel. The yield point is attained at factor ca. 3 (or 300%) of the catalogue data.

T2 for mineral oil = 37.2 Nm x 3 = 111.6 Nm.

Calculation example (operating conditions taken into account)

Operating factors

Due to the wide spectrum of possible applications, the operating factors are guideline values that should be used at ones own discretion. When commissioning it must be taken into account that, independent of the type of operation, the housing temperature does not exceed 80°C.

Shocks at the drive	None	Medium	Strong
Operating factor f1	1	1,2	1,5

Start-up frequency	10/h	60/h	360/h
Start-up factor f2	1	1,1	1,2

Duty cycle DC	<40%	<70%	<100%
Duty cycle factor f3	1	1,15	1,3

Gear set size 40 mm centre distance, transmission ration 1:35, T2=65.6 Nm (see above calculation) however with severe jolts / 360 starts per hour / 100% duty cycle operating conditions.

$$\textbf{Output torque} = \frac{T2}{f1 \times f2 \times f3} = \frac{65{,}6\text{Nm}}{1{,}5 \times 1{,}2 \times 1{,}3} = 28\text{Nm}$$

The relationship between service life, speed and torque can be calculated using the following simplified formula

Calculation of the service life (Lh new) with the required torque (T2 new)	$L_{h\,new} = \left(\frac{T2_{Nom.} \times \text{Factor n1}}{T2_{new}}\right)^2 \bullet L_{h\,Nom.}$	T2 Nom. = Output torque acc. to catalogue specifications Lh Nom. = Service life estimate acc. to catalogue ca. 3000 h
Calculation of the torque (T2 new) with the required service life (Lh new)	$T2_{new} = \frac{T2_{Nom.} \times \text{Factor } n_1}{\sqrt{\frac{L_{h\,new}}{L_{h\,Nom.}}}}$	

Worm gears, right-hand

centre distance 17 mm

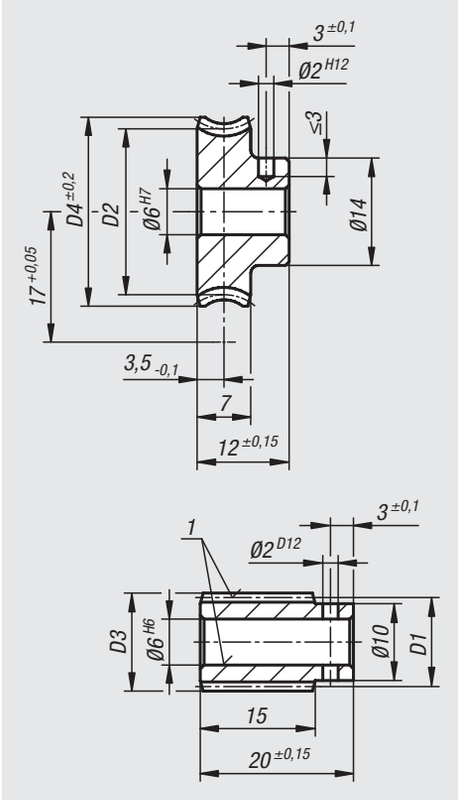

Material:
Worm screw steel.
Worm wheel CuZn37Mn3Al2PbSi-S40.

Version:
Worm screw with right-hand pitch, case-hardened HV 620 – 700, flanks and hole ground.

Sample order:
nlm 22500-171002 Worm screw
nlm 22500-172002 Worm wheel

Note for ordering:
Wheels/screws can only be combined to form a worm gear if they have the same centre distance and transmission ratio.

Note:
A worm gear consists of a worm screw (shaft) and a worm wheel. Suitable for forming worm drives with a 90° shaft angle. A worm drive enables very large speed reduction ratios with a single stage.

The toothing has the flank shape K. The engagement angle is 15°. The worm gears are pre-bored.

The stated T2 output torques are the permissible output torques on the worm wheel. These apply for an input speed of 2800 rpm of the worm screw.

The worm gears are suitable for continuous operation at high speeds and high torques.

Attention:
22500-171002: Screw polished only.
22500-172002: Worm wheel with helical gear toothing.

22500-171050: Screw has a Ø9 mm hub.

Drawing reference:
1) ground

Worm gears, right-hand

centre distance 17 mm

Order No. worm	Order No. worm wheel	Transmission ratio	Pitch angle	Module	Z1	D1	D3	Z2	D2	D4
22500-171002	**22500-172002**	-/2,25:1	48° 15	0,9	8/-	10,15/-	11,95/-	-/18	-/23,85	-/25,63
22500-171004	**22500-172004**	-/4,5:1	21° 50	0,75	6/-	12,1/-	13,6/-	-/27	-/21,9	-/24,6
22500-171005	**22500-172005**	-/5:1	21° 37	0,7	6/-	11,4/-	12,8/-	-/30	-/22,6	-/24,6
22500-171007	**22500-172007**	-/7:1	14° 4	1	3/-	12,34/-	14,34/-	-/21	-/21,66	-/24,6
22500-171009	**22500-172009**	-/9:1	9° 40	0,75	3/-	13,4/-	14,9/-	-/27	-/20,6	-/22,7
22500-171010	**22500-172010**	-/10:1	11° 48	0,75	3/-	11/-	12,5/-	-/30	-/23	-/24,6
22500-171015	**22500-172015**	-/15:1	7° 38	0,75	2/-	11,3/-	12,8/-	-/30	-/22,7	-/24,6
22500-171025	**22500-172025**	-/25:1	4° 32	0,9	1/-	11,4/-	13,2/-	-/25	-/22,6	-/24,6
22500-171030	**22500-172030**	-/30:1	3° 45	0,75	1/-	11,45/-	12,95/-	-/30	-/22,55	-/24,6
22500-171040	**22500-172040**	-/40:1	2° 3	0,5	1/-	13,98/-	14,98/-	-/40	-/20,02	-/21,6
22500-171050	**22500-172050**	-/50:1	3° 12	0,5	1/-	8,95/-	9,95/-	-/50	-/25,05	-/27,2
22500-171060	**22500-172060**	-/60:1	2° 18	0,4	1/-	9,95/-	10,75/-	-/60	-/24,05	-/26
22500-171075	**22500-172075**	-/75:1	1° 28	0,3	1/-	11,74/-	12,34/-	-/75	-/22,26	-/24
22500-171080	**22500-172080**	-/80:1	1° 43	0,3	1/-	10/-	10,84/-	-/80	-/24	-/25,1

Order No. worm	Order No. worm wheel	Transmission ratio	Output torque T2 (Nm) mineral grease	Output torque T2 (Nm) mineral oil	Output torque T2 (Nm) synthetic oil
22500-171002	**22500-172002**	-/2,25:1	1,1	1,3	1,6
22500-171004	**22500-172004**	-/4,5:1	1,7	2	2,6
22500-171005	**22500-172005**	-/5:1	1,8	2,2	2,7
22500-171007	**22500-172007**	-/7:1	1,6	1,9	2,4
22500-171009	**22500-172009**	-/9:1	1,5	1,8	2,2
22500-171010	**22500-172010**	-/10:1	1,9	2,3	2,8
22500-171015	**22500-172015**	-/15:1	1,9	2,3	2,8
22500-171025	**22500-172025**	-/25:1	1,8	2,2	2,7
22500-171030	**22500-172030**	-/30:1	1,9	2,3	2,8
22500-171040	**22500-172040**	-/40:1	1,4	1,7	2,1
22500-171050	**22500-172050**	-/50:1	1	1,2	1,5
22500-171060	**22500-172060**	-/60:1	1,6	1,9	2,4
22500-171075	**22500-172075**	-/75:1	1,5	1,8	2,2
22500-171080	**22500-172080**	-/80:1	1,5	1,8	2,2

Worm gears, right-hand

centre distance 22.62 mm

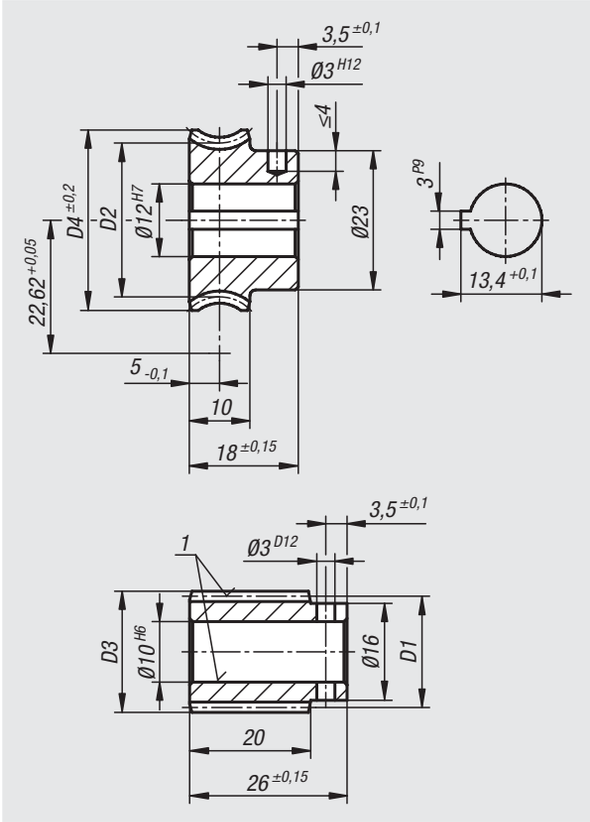

Material:
Worm screw steel.
Worm wheel CuZn37Mn3Al2PbSi-S40.

Version:
Worm screw with right-hand pitch, case-hardened HV 620 – 700, flanks and hole ground.

Sample order:
nlm 22500-221003 Worm screw
nlm 22500-222003 Worm wheel

Note for ordering:
Wheels/screws can only be combined to form a worm gear if they have the same centre distance and transmission ratio.

Note:
A worm gear consists of a worm screw (shaft) and a worm wheel. Suitable for forming worm drives with a 90° shaft angle. A worm drive enables very large speed reduction ratios with a single stage.

The toothing has the flank shape K. The engagement angle is 15°. The worm gears are pre-bored.

The stated T2 output torques are the permissible output torques on the worm wheel. These apply for an input speed of 2800 rpm of the worm screw.

The worm gears are suitable for continuous operation at high speeds and high torques.

Drawing reference:
1) ground

Worm gears, right-hand

centre distance 22.62 mm

Order No. worm	Order No. worm wheel	Transmission ratio	Pitch angle	Module	Z1	D1	D3	Z2	D2	D4
22500-221003	**22500-222003**	-/3:1	17° 36	1	7/-	23,15/-	25,15/-	-/21	-/22,09	-/24,8
22500-221004	**22500-222004**	-/4:1	19° 32	1,25	5/-	18,7/-	21,2/-	-/20	-/26,54	-/29,8
22500-221007	**22500-222007**	-/7:1	11° 46	1,25	3/-	18,4/-	20,9/-	-/21	-/26,84	-/29,8
22500-221010	**22500-222010**	-/10,5:1	7° 41	1,25	2/-	18,7/-	21,2/-	-/21	-/26,54	-/29,8
22500-221021	**22500-222021**	-/21:1	3° 48	1,25	1/-	18,9/-	21,4/-	-/21	-/26,34	-/29,8
22500-221030	**22500-222030**	-/30:1	2° 50	0,9	1/-	18,2/-	20/-	-/30	-/27,04	-/29,8
22500-221040	**22500-222040**	-/40:1	2° 20	0,7	1/-	17,2/-	18,6/-	-/40	-/28,04	-/29,8

Order No. worm	Order No. worm wheel	Transmission ratio	Output torque T2 (Nm) mineral grease	Output torque T2 (Nm) mineral oil	Output torque T2 (Nm) synthetic oil
22500-221003	**22500-222003**	/3:1	2,2	2,6	3,3
22500-221004	**22500-222004**	/4:1	3,6	4,3	5,4
22500-221007	**22500-222007**	/7:1	3,6	4,3	5,4
22500-221010	**22500-222010**	/10,5:1	3,4	4,1	5,1
22500-221021	**22500-222021**	/21:1	3,4	4,1	5,1
22500-221030	**22500-222030**	/30:1	3,6	4,3	5,4
22500-221040	**22500-222040**	/40:1	3,9	4,7	5,8

Worm gears, right-hand

centre distance 25 mm

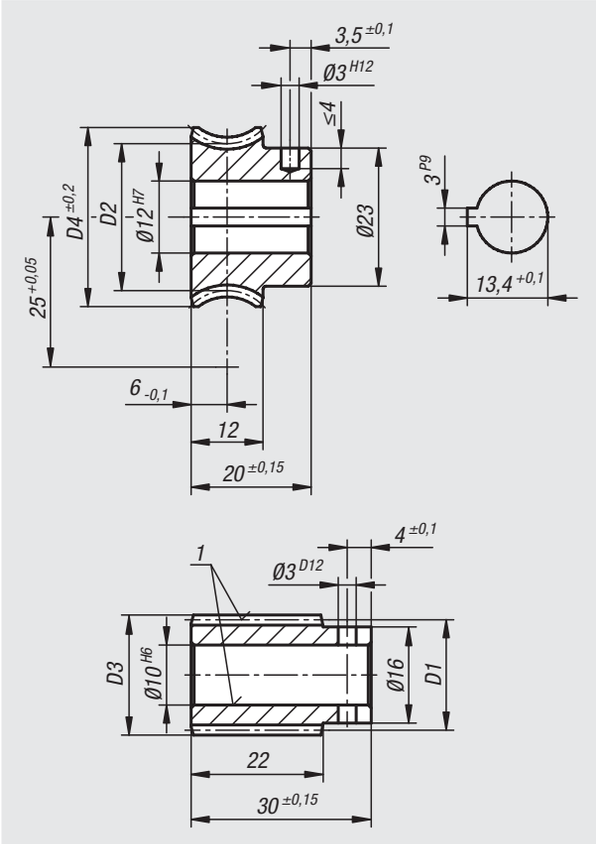

Material:
Worm screw steel.
Worm wheel CuZn37Mn3Al2PbSi-S40.

Version:
Worm screw with right-hand pitch, case-hardened HV 620 – 700, flanks and hole ground.

Sample order:
nlm 22500-251004 Worm screw
nlm 22500-252004 Worm wheel

Note for ordering:
Wheels/screws can only be combined to form a worm gear if they have the same centre distance and transmission ratio.

Note:
A worm gear consists of a worm screw (shaft) and a worm wheel. Suitable for forming worm drives with a 90° shaft angle. A worm drive enables very large speed reduction ratios with a single stage.

The toothing has the flank shape K. The engagement angle is 15°. The worm gears are pre-bored.

The stated T2 output torques are the permissible output torques on the worm wheel. These apply for an input speed of 2800 rpm of the worm screw.

The worm gears are suitable for continuous operation at high speeds and high torques.

Drawing reference:
1) ground

Worm gears, right-hand

centre distance 25 mm

Order No. worm	Order No. worm wheel	Transmission ratio	Pitch angle	Module	Z1	D1	D3	Z2	D2	D4
22500-251004	**22500-252004**	-/4:1	20° 29	1,4	5/-	20/-	22,8/-	-/20	-/30	-/33,5
22500-251005	**22500-252005**	-/5:1	19° 15	1,5	4/-	18,2/-	21,2/-	-/20	-/31,8	-/34,8
22500-251006	**22500-252006**	-/6,5:1	13° 52	1,15	4/-	19,2/-	21,5/-	-/26	-/30,8	-/34,8
22500-251010	**22500-252010**	-/10:1	8° 48	1,5	2/-	19,6/-	22,6/-	-/20	-/30,4	-/34,8
22500-251015	**22500-252015**	-/15:1	6° 29	1	2/-	17,7/-	19,7/-	-/30	-/32,3	-/34,8
22500-251020	**22500-252020**	-/20:1	4° 19	1,5	1/-	19,9/-	22,9/-	-/20	-/30,1	-/34,8
22500-251025	**22500-252025**	-/25:1	2° 18	1	1/-	24,96/-	26,96/-	-/25	-/25,04	-/27,8
22500-251030	**22500-252030**	-/30:1	2° 53	1	1/-	19,9/-	21,9/-	-/30	-/30,1	-/33,5
22500-251040	**22500-252040**	-/40:1	2° 33	0,8	1/-	17,96/-	19,56/-	-/40	-/32,04	-/34,8
22500-251050	**22500-252050**	-/50:1	1° 43	0,6	1/-	19,96/-	21,16/-	-/50	-/30,04	-/33,5

Order No. worm	Order No. worm wheel	Transmission ratio	Output torque T2 (Nm) mineral grease	Output torque T2 (Nm) mineral oil	Output torque T2 (Nm) synthetic oil
22500-251004	**22500-252004**	-/4:1	5,1	6,1	7,6
22500-251005	**22500-252005**	-/5:1	6,5	7,8	9,7
22500-251006	**22500-252006**	-/6,5:1	6	7,2	9
22500-251010	**22500-252010**	-/10:1	5,9	7,1	8,8
22500-251015	**22500-252015**	-/15:1	5,7	6,8	8,5
22500-251020	**22500-252020**	-/20:1	5,8	7	8,7
22500-251025	**22500-252025**	-/25:1	4,1	4,9	6,1
22500-251030	**22500-252030**	-/30:1	5,9	7,1	8,8
22500-251040	**22500-252040**	-/40:1	6,2	7,4	9,3
22500-251050	**22500-252050**	-/50:1	5,1	6,1	7,6

Worm gears, right-hand

centre distance 31 mm

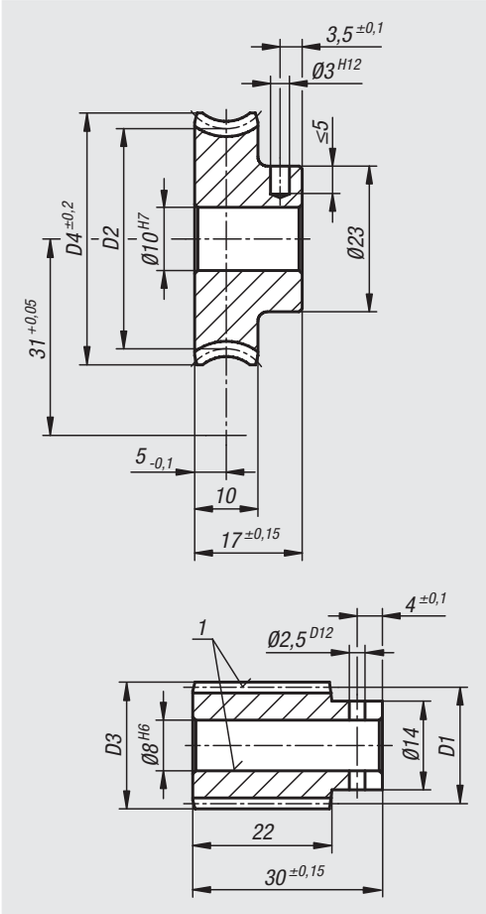

Material:
Worm screw steel.
Worm wheel CuZn37Mn3Al2PbSi-S40.

Version:
Worm screw with right-hand pitch, case-hardened HV 620 – 700, flanks and hole ground.

Sample order:
nlm 22500-311002 Worm
nlm 22500-312002 Worm wheel

Note for ordering:
Wheels/screws can only be combined to form a worm gear if they have the same centre distance and transmission ratio.

Note:
A worm gear consists of a worm screw (shaft) and a worm wheel. Suitable for forming worm drives with a 90° shaft angle. A worm drive enables very large speed reduction ratios with a single stage.

The toothing has the flank shape K. The engagement angle is 15°. The worm gears are pre-bored.

The stated T2 output torques are the permissible output torques on the worm wheel. These apply for an input speed of 2800 rpm of the worm screw.

The worm gears are suitable for continuous operation at high speeds and high torques.

Drawing reference:
1) ground

Order No. worm	Order No. worm wheel	Transmission ratio	Pitch angle	Module	Z1	D1	D3	Z2	D2	D4
22500-311002	**22500-312002**	-/2,5:1	45° 15	1,25	10/-	17,6/-	20,1/-	-/25	-/44,4	-/46,9
22500-311003	**22500-312003**	-/3:1	35° 10	1,15	10/-	19,97/-	22,27/-	-/30	-/42,03	-/44,5
22500-311004	**22500-312004**	-/4,28:1	25° 24	1,25	7/-	20,4/-	22,9/-	-/30	-/41,6	-/45
22500-311005	**22500-312005**	-/5:1	23° 46	1,3	6/-	19,35/-	21,95/-	-/30	-/42,65	-/46,5
22500-311006	**22500-312006**	-/6:1	18° 13	1,3	5/-	20,8/-	23,4/-	-/30	-/41,2	-/45
22500-311007	**22500-312007**	-/7:1	20° 32	1,5	4/-	17,1/-	20,1/-	-/28	-/44,9	-/48,8
22500-311008	**22500-312008**	-/8,33:1	19° 49	1,75	3/-	15,5/-	19/-	-/25	-/46,5	-/51
22500-311010	**22500-312010**	-/10:1	12° 50	1,4	3/-	18,9/-	21,7/-	-/30	-/43,1	-/47
22500-311012	**22500-312012**	-/12:1	13° 55	1,25	3/-	15,6/-	18,1/-	-/36	-/46,4	-/50
22500-311015	**22500-312015**	-/15:1	10° 40	1,5	2/-	16,2/-	19,2/-	-/30	-/45,8	-/50
22500-311018	**22500-312018**	-/18:1	8° 44	1,25	2/-	16,46/-	18,96/-	-/36	-/45,54	-/48,8
22500-311020	**22500-312020**	-/20:1	7° 49	0,75	3/-	16,54/-	18,04/-	-/60	-/45,46	-/48
22500-311022	**22500-312022**	-/22:1	6° 29	1	2/-	17,7/-	19,7/-	-/44	-/44,3	-/48

Worm gears, right-hand

centre distance 31 mm

Order No. worm	Order No. worm wheel	Transmission ratio	Pitch angle	Module	Z1	D1	D3	Z2	D2	D4
22500-311023	22500-312023	-/23:1	7° 29	2	1/-	15,35/-	19,35/-	-/23	-/46,65	-/52
22500-311024	22500-312024	-/24:1	5° 4	1,75	1/-	19,8/-	23,3/-	-/24	-/42,2	-/47
22500-311025	22500-312025	-/25:1	5° 35	1,75	1/-	18/-	21,5/-	-/25	-/44	-/48,5
22500-311028	22500-312028	-/28:1	4° 20	1,5	1/-	19,85/-	22,85/-	-/28	-/42,15	-/46,5
22500-311030	22500-312030	-/30:1	5° 7	1,5	1/-	16,8/-	19,8/-	-/30	-/45,2	-/48,8
22500-311032	22500-312032	-/32:1	4° 45	1,4	1/-	16,9/-	19,7/-	-/32	-/45,1	-/48,8
22500-311038	22500-312038	-/38:1	5° 1	1,25	1/-	14,3/-	16,8/-	-/38	-/47,7	-/51,2
22500-311045	22500-312045	-/45:1	3° 23	1	1/-	16,93/-	18,93/-	-/45	-/45,07	-/48
22500-311050	22500-312050	-/50:1	3° 3	0,9	1/-	16,9/-	18,7/-	-/50	-/45,1	-/48
22500-311055	22500-312055	-/55:1	4° 12	0,9	1/-	12,3/-	14,1/-	-/55	-/49,7	-/52
22500-311060	22500-312060	-/60:1	2° 33	0,75	1/-	16,9/-	18,4/-	-/60	-/45,1	-/48
22500-311070	22500-312070	-/70:1	3° 7	0,7	1/-	12,9/-	14,3/-	-/70	-/49,1	-/52
22500-311075	22500-312075	-/75:1	2° 2	0,6	1/-	16,9/-	18,1/-	-/75	-/45,1	-/47
22500-311090	22500-312090	-/90:1	1° 41	0,5	1/-	17/-	18/-	-/90	-/45	-/48
22500-311100	22500-312100	-/100:1	2° 24	0,5	1/-	11,96/-	12,96/-	-/100	-/50,04	-/52,7

Order No. worm	Order No. worm wheel	Transmission ratio	Output torque T2 (Nm) mineral grease	Output torque T2 (Nm) mineral oil	Output torque T2 (Nm) synthetic oil
22500-311002	22500-312002	-/2,5:1	4,4	5,3	6,6
22500-311003	22500-312003	-/3:1	4,5	5,4	6,7
22500-311004	22500-312004	-/4,28:1	9	10,8	13,5
22500-311005	22500-312005	-/5:1	9,5	11,4	14,2
22500-311006	22500-312006	-/6:1	7,6	9,1	11,4
22500-311007	22500-312007	-/7:1	9,7	11,6	14,5
22500-311008	22500-312008	-/8,33:1	10	12	15
22500-311010	22500-312010	-/10:1	9,5	11,4	14,2
22500-311012	22500-312012	-/12:1	12,1	14,5	18,1
22500-311015	22500-312015	-/15:1	10,7	12,8	16
22500-311018	22500-312018	-/18:1	10,3	12,4	15,4
22500-311020	22500-312020	-/20:1	8,3	10	12,4
22500-311022	22500-312022	-/22:1	9,6	11,5	14,4
22500-311023	22500-312023	-/23:1	10,5	12,6	15,7
22500-311024	22500-312024	-/24:1	9,2	11	13,8
22500-311025	22500-312025	-/25:1	9,6	11,5	14,4
22500-311028	22500-312028	-/28:1	9,1	10,9	13,6
22500-311030	22500-312030	-/30:1	10,3	12,4	15,4
22500-311032	22500-312032	-/32:1	10,2	12,2	15,3
22500-311038	22500-312038	-/38:1	11,4	13,7	17,1
22500-311045	22500-312045	-/45:1	9,5	11,4	14,2
22500-311050	22500-312050	-/50:1	9	10,8	13,5
22500-311055	22500-312055	-/55:1	10,4	12,5	15,6
22500-311060	22500-312060	-/60:1	8,2	9,8	12,3
22500-311070	22500-312070	-/70:1	9	10,8	13,5
22500-311075	22500-312075	-/75:1	7,3	8,8	10,9
22500-311090	22500-312090	-/90:1	6,4	7,7	9,6
22500-311100	22500-312100	-/100:1	7,4	8,9	11,1

Worm gears, right-hand

centre distance 33 mm

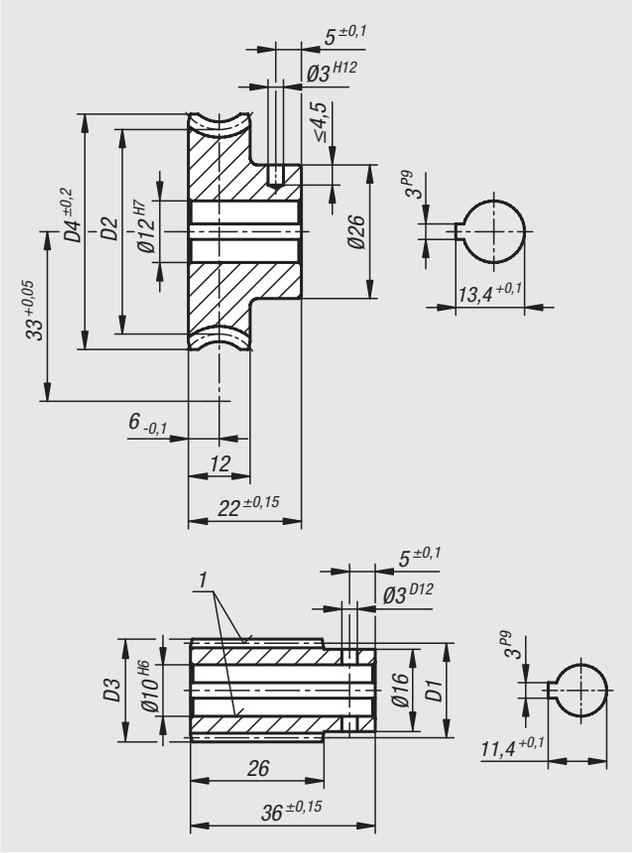

Material:
Worm screw steel.
Worm wheel CuZn37Mn3Al2PbSi-S40.

Version:
Worm screw with right-hand pitch, case-hardened HV 620 – 700, flanks and hole ground.

Sample order:
nlm 22500-331003 Worm
nlm 22500-332003 Worm wheel

Note for ordering:
Wheels/screws can only be combined to form a worm gear if they have the same centre distance and transmission ratio.

Note:
A worm gear consists of a worm screw (shaft) and a worm wheel. Suitable for forming worm drives with a 90° shaft angle. A worm drive enables very large speed reduction ratios with a single stage.

The toothing has the flank shape K. The engagement angle is 15°. The worm gears are pre-bored.

The stated T2 output torques are the permissible output torques on the worm wheel. These apply for an input speed of 2800 rpm of the worm screw.

The worm gears are suitable for continuous operation at high speeds and high torques.

Drawing reference:
1) ground

Worm gears, right-hand

centre distance 33 mm

Order No. worm	Order No. worm wheel	Transmission ratio	Pitch angle	Module	Z1	D1	D3	Z2	D2	D4
22500-331003	22500-332003	-/3,5:1	25° 57	1,75	6/-	24/-	27,5/-	-/21	-/42	-/47
22500-331005	22500-332005	-/5:1	20° 50	2	4/-	22,5/-	26,5/-	-/20	-/43,5	-/49
22500-331007	22500-332007	-/7:1	15° 32	1,5	4/-	22,4/-	25,4/-	-/28	-/43,6	-/48
22500-331010	22500-332010	-/10:1	13° 10	1,5	3/-	19,75/-	22,75/-	-/30	-/46,25	-/51
22500-331011	22500-332011	-/11,33:1	10° 42	1,3	3/-	21/-	23,6/-	-/34	-/45	-/49,2
22500-331012	22500-332012	-/12:1	11° 14	1,9	2/-	19,5/-	23,3/-	-/24	-/46,5	-/52
22500-331015	22500-332015	-/15:1	8° 25	1,5	2/-	20,5/-	23,5/-	-/30	-/45,5	-/50
22500-331016	22500-332016	-/16:1	10° 1	1,5	2/-	17,24/-	20,24/-	-/32	-/48,76	-/53
22500-331017	22500-332017	-/17:1	9° 3	1,4	2/-	17,8/-	20,6/-	-/34	-/48,2	-/52,5
22500-331018	22500-332018	-/18:1	6° 57	1,25	2/-	20,65/-	23,15/-	-/36	-/45,35	-/49,2
22500-331020	22500-332020	-/20:1	6° 43	1,15	2/-	19,66/-	21,96/-	-/40	-/46,34	-/50,5
22500-331024	22500-332024	-/24:1	5° 27	1,9	1/-	20/-	23,8/-	-/24	-/46	-/51
22500-331028	22500-332028	-/28:1	3° 36	1,5	1/-	23,9/-	26,9/-	-/28	-/42,1	-/46,6
22500-331030	22500-332030	-/30:1	4° 8	1,5	1/-	20,85/-	23,85/-	-/30	-/45,15	-/50
22500-331032	22500-332032	-/32:1	4° 50	1,5	1/-	17,8/-	20,8/-	-/32	-/48,2	-/52,5
22500-331038	22500-332038	-/38:1	3° 55	1,25	1/-	18,28/-	20,76/-	-/38	-/47,74	-/51,6
22500-331050	22500-332050	-/50:1	2° 27	0,9	1/-	21/-	22,8/-	-/50	-/45	-/48
22500-331056	22500-332056	-/56:1	2° 10	0,8	1/-	21,15/-	22,75/-	-/56	-/44,85	-/48
22500-331060	22500-332060	-/60:1	2° 33	0,8	1/-	17,96/-	19,56/-	-/60	-/48,04	-/51,5
22500-331072	22500-332072	-/72:1	1° 30	0,6	1/-	22,8/-	24/-	-/72	-/43,2	-/46
22500-331075	22500-332075	-/75:1	1° 41	0,6	1/-	20,5/-	21,7/-	-/75	-/45,5	-/48

Order No. worm	Order No. worm wheel	Transmission ratio	Output torque T2 (Nm) mineral grease	Output torque T2 (Nm) mineral oil	Output torque T2 (Nm) synthetic oil
22500-331003	22500-332003	-/3,5:1	10,1	12,1	15,1
22500-331005	22500-332005	-/5:1	10,6	12,7	15,9
22500-331007	22500-332007	-/7:1	12,2	14,6	18,3
22500-331010	22500-332010	-/10:1	13,3	16	19,9
22500-331011	22500-332011	-/11,33:1	13,3	16	19,9
22500-331012	22500-332012	-/12:1	13,5	16,2	20,2
22500-331015	22500-332015	-/15:1	13	15,6	19,5
22500-331016	22500-332016	-/16:1	14	16,8	21
22500-331017	22500-332017	-/17:1	14,2	17	21,3
22500-331018	22500-332018	-/18:1	12,6	15,1	18,9
22500-331020	22500-332020	-/20:1	12,7	15,2	19
22500-331024	22500-332024	-/24:1	13,2	15,8	19,8
22500-331028	22500-332028	-/28:1	11,2	13,4	16,8
22500-331030	22500-332030	-/30:1	12,7	15,2	19
22500-331032	22500-332032	-/32:1	13,5	16,2	20,2
22500-331038	22500-332038	-/38:1	13,9	16,7	20,8
22500-331050	22500-332050	-/50:1	10	12	15
22500-331056	22500-332056	-/56:1	10,1	12,1	15,1
22500-331060	22500-332060	-/60:1	11,4	13,7	17,1
22500-331072	22500-332072	-/72:1	8,4	10,01	12,6
22500-331075	22500-332075	-/75:1	9	10,8	13,5

Worm gears, right-hand

centre distance 35 mm

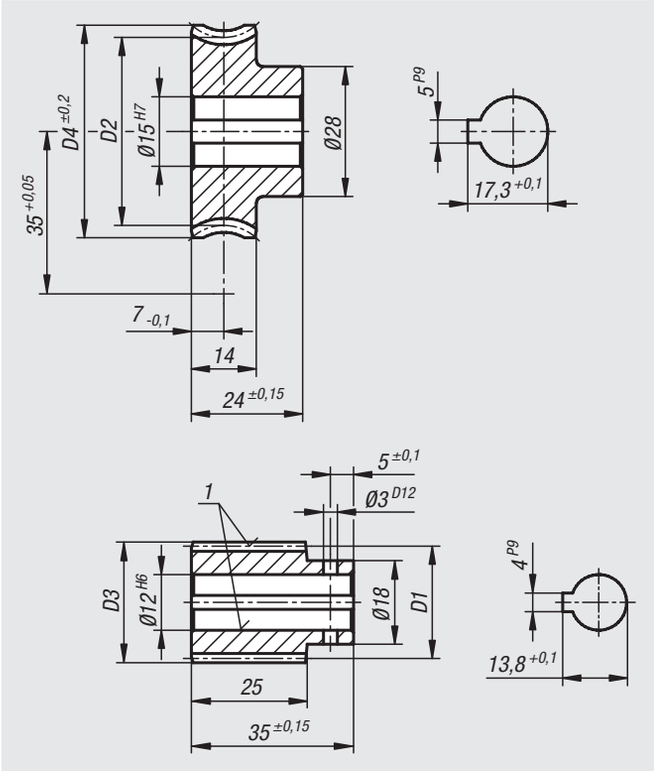

Material:
Worm screw steel.
Worm wheel CuZn37Mn3Al2PbSi-S40.

Version:
Worm screw with right-hand pitch, case-hardened HV 620 – 700, flanks and hole ground.

Sample order:
nlm 22500-351002 Worm screw
nlm 22500-352002 Worm wheel

Note for ordering:
Wheels/screws can only be combined to form a worm gear if they have the same centre distance and transmission ratio.

Note:
A worm gear consists of a worm screw (shaft) and a worm wheel. Suitable for forming worm drives with a 90° shaft angle. A worm drive enables very large speed reduction ratios with a single stage.

The toothing has the flank shape K. The engagement angle is 15°. The worm gears are pre-bored.

The stated T2 output torques are the permissible output torques on the worm wheel. These apply for an input speed of 2800 rpm of the worm screw.

The worm gears are suitable for continuous operation at high speeds and high torques.

Drawing reference:
1) ground

Worm gears, right-hand

centre distance 35 mm

Order No. worm	Order No. worm wheel	Transmission ratio	Pitch angle	Module	Z1	D1	D3	Z2	D2	D4
22500-351002	22500-352002	-/2,78:1	31° 01	1,5	9/-	26,2/-	29,2/-	-/25	-/43,8	-/46,76
22500-351005	22500-352005	-/5:1	22° 52	1,75	5/-	22,52/-	26,02/-	-/25	-/47,48	-/53
22500-351007	22500-352007	-/7,25:1	13° 47	1,5	4/-	25,18/-	28,18/-	-/29	-/44,82	-/50
22500-351008	22500-352008	-/8:1	14° 25	1,9	3/-	22,89/-	26,69/-	-/24	-/47,11	-/53
22500-351010	22500-352010	-/10:1	10° 43	1,5	3/-	24,2/-	27,2/-	-/30	-/45,8	-/51
22500-351011	22500-352011	-/11:1	10° 32	1,4	3/-	22,98/-	25,78/-	-/33	-/47,02	-/52
22500-351012	22500-352012	-/12:1	9° 11	1,9	2/-	23,8/-	27,6/-	-/24	-/46,2	-/52
22500-351015	22500-352015	-/15:1	7°	1,5	2/-	24,62/-	27,62/-	-/30	-/45,38	-/50
22500-351020	22500-352020	-/20:1	5° 33	1,15	2/-	23,78/-	26,08/-	-/40	-/46,22	-/50,5
22500-351025	22500-352025	-/25:1	4° 9	0,9	2/-	24,87/-	26,67/-	-/50	-/45,13	-/49
22500-351030	22500-352030	-/30:1	3° 27	1,5	1/-	24,92/-	27,92/-	-/30	-/45,08	-/50
22500-351035	22500-352035	-/35:1	3° 51	1,4	1/-	20,85/-	23,65/-	-/35	-/49,15	-/53
22500-351040	22500-352040	-/40:1	2° 45	1,15	1/-	23,91/-	26,21/-	-/40	-/46,09	-/50,5
22500-351050	22500-352050	-/50:1	2° 4	0,9	1/-	24,93/-	26,73/-	-/50	-/45,07	-/49
22500-351058	22500-352058	-/58:1	2° 21	0,85	1/-	20,65/-	22,35/-	-/58	-/49,35	-/53
22500-351090	22500-352090	-/90:1	1° 9	0,5	1/-	25/-	26/-	-/90	-/45	-/49

Order No. worm	Order No. worm wheel	Transmission ratio	Output torque T2 (Nm) mineral grease	Output torque T2 (Nm) mineral oil	Output torque T2 (Nm) synthetic oil
22500-351002	22500-352002	-/2,78:1	6,6	8,2	10,2
22500-351005	22500-352005	-/5:1	15,3	18,4	22,9
22500-351007	22500-352007	-/7,25:1	14,7	17,6	22
22500-351008	22500-352008	-/8:1	16,7	20	25
22500-351010	22500-352010	-/10:1	16	19,2	24
22500-351011	22500-352011	-/11:1	16,7	20	25
22500-351012	22500-352012	-/12:1	16,1	19,3	24
22500-351015	22500-352015	-/15:1	15,3	18,4	22,9
22500-351020	22500-352020	-/20:1	14,8	17,8	22,2
22500-351025	22500-352025	-/25:1	12,9	15,5	19,3
22500-351030	22500-352030	-/30:1	15	18	22,5
22500-351035	22500-352035	-/35:1	17,1	20,5	25,6
22500-351040	22500-352040	-/40:1	14,7	17,6	22
22500-351050	22500-352050	-/50:1	12,9	15,5	19,3
22500-351058	22500-352058	-/58:1	14,5	17,4	21,7
22500-351090	22500-352090	-/90:1	9,1	10,9	13,6

Worm gears, right-hand

centre distance 40 mm

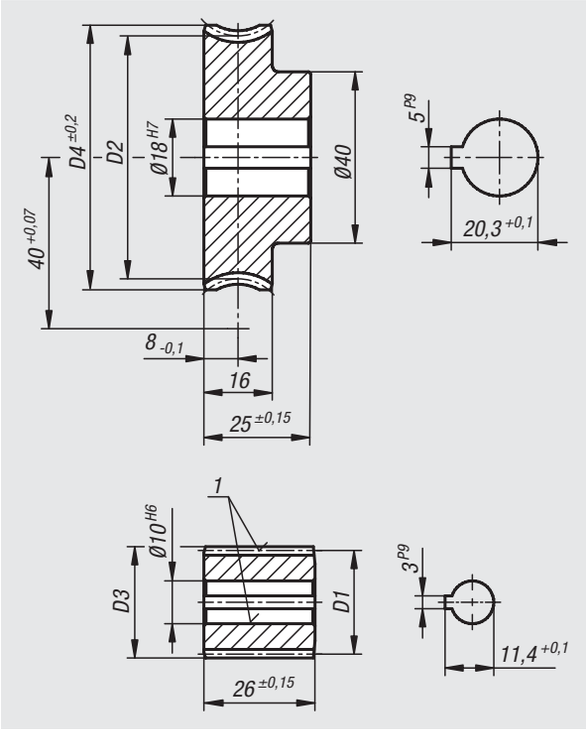

Material:
Worm screw steel.
Worm wheel CuZn37Mn3Al2PbSi-S40.

Version:
Worm screw with right-hand pitch, case-hardened HV 620 – 700, flanks and hole ground.

Sample order:
nlm 22500-401006 Worm screw
nlm 22500-402006 Worm wheel

Note for ordering:
Wheels/screws can only be combined to form a worm gear if they have the same centre distance and transmission ratio.

Note:
A worm gear consists of a worm screw (shaft) and a worm wheel. Suitable for forming worm drives with a 90° shaft angle. A worm drive enables very large speed reduction ratios with a single stage.

The toothing has the flank shape K. The engagement angle is 15°. The worm gears are pre-bored.

The stated T2 output torques are the permissible output torques on the worm wheel. These apply for an input speed of 2800 rpm of the worm screw.

The worm gears are suitable for continuous operation at high speeds and high torques.

Drawing reference:
1) ground

Worm gears, right-hand

centre distance 40 mm

Order No. worm	Order No. worm wheel	Transmission ratio	Pitch angle	Module	Z1	D1	D3	Z2	D2	D4
22500-401006	22500-402006	-/6,75:1	21° 19	2	4/-	22/-	26/-	-/27	-/58	-/64
22500-401008	22500-402008	-/8:1	16° 35	2,25	3/-	23,64/-	28,14/-	-/24	-/56,36	-/62,5
22500-401010	22500-402010	-/10:1	16° 1	1,9	3/-	20,66/-	24,46/-	-/30	-/59,34	-/65
22500-401012	22500-402012	-/12:1	10° 21	1,5	3/-	25,05/-	28,05/-	-/36	-/54,95	-/60
22500-401015	22500-402015	-/15:1	9° 53	1,9	2/-	22,14/-	25,94/-	-/30	-/57,86	-/64
22500-401020	22500-402020	-/20:1	8° 59	1,5	2/-	19,2/-	22,2/-	-/40	-/60,8	-/66
22500-401025	22500-402025	-/25:1	5° 58	1,15	2/-	22,15/-	24,45/-	-/50	-/57,85	-/62
22500-401028	22500-402028	-/28:1	4° 47	2	1/-	24/-	28/-	-/28	-/56	-/61,5
22500-401030	22500-402030	-/30:1	5° 50	2	1/-	19,68/-	23,68/-	-/30	-/60,32	-/66
22500-401035	22500-402035	-/35:1	5° 26	1,75	1/-	18,48/-	21,98/-	-/35	-/61,52	-/67
22500-401036	22500-402036	-/36:1	3° 19	1,5	1/-	25,91/-	28,91/-	-/36	-/54,09	-/59
22500-401040	22500-402040	-/40:1	4° 20	1,5	1/-	19,83/-	22,83/-	-/40	-/60,17	-/65
22500-401050	22500-402050	-/50:1	4° 8	1,25	1/-	17,3/-	19,8/-	-/50	-/62,7	-/68
22500-401056	22500-402056	-/56:1	2° 23	1	1/-	24/-	26/-	-/56	-/56	-/59
22500-401060	22500-402060	-/60:1	1° 59	0,9	1/-	25,92/-	27,72/-	-/60	-/54,08	-/57,5
22500-401070	22500-402070	-/70:1	3° 3	0,9	1/-	16,91/-	18,71/-	-/70	-/63,09	-/67
22500-401075	22500-402075	-/75:1	1° 48	0,75	1/-	23,75/-	25,25/-	-/75	-/56,26	-/60
22500-401080	22500-402080	-/80:1	2° 10	0,75	1/-	19,9/-	21,4/-	-/80	-/60,1	-/64
22500-401090	22500-402090	-/90:1	2° 22	0,7	1/-	16,95/-	18,35/-	-/90	-/63,05	-/67

Order No. worm	Order No. worm wheel	Transmission ratio	Output torque T2 (Nm) mineral grease	Output torque T2 (Nm) mineral oil	Output torque T2 (Nm) synthetic oil
22500-401006	22500-402006	-/6,75:1	29,5	35,4	44,2
22500-401008	22500-402008	-/8:1	27,5	33	41,2
22500-401010	22500-402010	-/10:1	29,5	35,4	44,2
22500-401012	22500-402012	-/12:1	25,2	30,2	37,8
22500-401015	22500-402015	-/15:1	28	33,6	42
22500-401020	22500-402020	-/20:1	28,9	34,6	43,3
22500-401025	22500-402025	-/25:1	24,4	29,2	36,6
22500-401028	22500-402028	-/28:1	28,4	34	42,6
22500-401030	22500-402030	-/30:1	30,1	36,1	45,1
22500-401035	22500-402035	-/35:1	31	37,2	46,5
22500-401036	22500-402036	-/36:1	23,9	28,6	35,8
22500-401040	22500-402040	-/40:1	28,3	33,9	42,4
22500-401050	22500-402050	-/50:1	27	32,4	40,5
22500-401056	22500-402056	-/56:1	21,9	26,2	32,8
22500-401060	22500-402060	-/60:1	19,3	23,1	28,9
22500-401070	22500-402070	-/70:1	24,1	28,9	36,1
22500-401075	22500-402075	-/75:1	18,8	22,5	28,2
22500-401080	22500-402080	-/80:1	20,1	24,1	30,1
22500-401090	22500-402090	-/90:1	19,1	22,9	28,6

Worm gears, right-hand

centre distance 50 mm

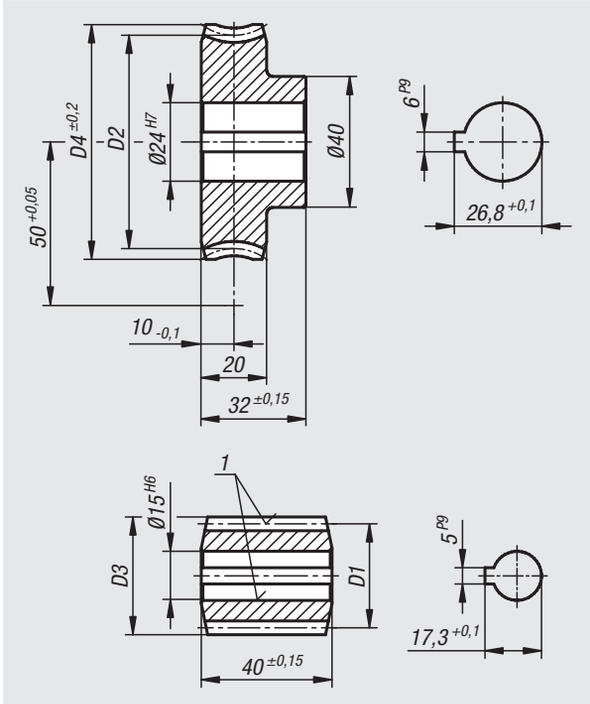

Material:
Worm screw steel.
Worm wheel CuZn37Mn3Al2PbSi-S40.

Version:
Worm screw with right-hand pitch, case-hardened HV 620 – 700, flanks and hole ground.

Sample order:
nlm 22500-531004 Worm screw
nlm 22500-502004 Worm wheel

Note for ordering:
Wheels/screws can only be combined to form a worm gear if they have the same centre distance and transmission ratio.

Note:
A worm gear consists of a worm screw (shaft) and a worm wheel. Suitable for forming worm drives with a 90° shaft angle. A worm drive enables very large speed reduction ratios with a single stage.

The toothing has the flank shape K. The engagement angle is 15°. The worm gears are pre-bored.

The stated T2 output torques are the permissible output torques on the worm wheel. These apply for an input speed of 2800 rpm of the worm screw.

The worm gears are suitable for continuous operation at high speeds and high torques.

Drawing reference:
1) ground

Worm gears, right-hand

centre distance 50 mm

Order No. worm	Order No. worm wheel	Transmission ratio	Pitch angle	Module	Z1	D1	D3	Z2	D2	D4
22500-531004	22500-502004	-/4,25:1	25° 51	3,5	4/-	32,1/-	39,1/-	-/17	-/67,9	-/77
22500-531006	22500-502006	-/6:1	19° 17	3,5	3/-	31,8/-	38,8/-	-/18	-/68,2	-/77
22500-531008	22500-502008	-/8,66:1	13° 52	2,5	3/-	31,29/-	36,29/-	-/26	-/68,71	-/77
22500-531012	22500-502012	-/12:1	10° 23	2,75	2/-	30,5/-	36/-	-/24	-/69,5	-/77
22500-531013	22500-502014	-/13,5:1	9° 38	2,5	2/-	29,9/-	34,9/-	-/27	-/70,1	-/77
22500-531019	22500-502019	-/19:1	6° 17	3,5	1/-	32/-	39/-	-/19	-/68	-/77
22500-531023	22500-502023	-/23:1	5° 38	3	1/-	30,58/-	36,58/-	-/23	-/69,42	-/77
22500-531027	22500-502027	-/27:1	4° 40	2,5	1/-	30,73/-	35,73/-	-/27	-/69,27	-/77
22500-531035	22500-502035	-/35:1	3° 51	2	1/-	29,78/-	33,78/-	-/35	-/70,22	-/77
22500-531046	22500-502046	-/46:1	2° 47	1,5	1/-	30,85/-	33,85/-	-/46	-/69,15	-/74
22500-531055	22500-502055	-/55:1	2° 19	1,25	1/-	30,9/-	33,4/-	-/55	-/69,1	-/74
22500-531075	22500-502069	-/69:1	1° 51	1	1/-	30,9/-	32,9/-	-/69	-/69,1	-/74

Order No. worm	Order No. worm wheel	Transmission ratio	Output torque T2 (Nm) mineral grease	Output torque T2 (Nm) mineral oil	Output torque T2 (Nm) synthetic oil
22500-531004	22500-502004	-/4,25:1	-/34	-/40,8	-/51
22500-531006	22500-502006	-/6:1	-/52	-/62,4	-/78
22500-531008	22500-502008	-/8,66:1	-/64,3	-/77,1	-/96,4
22500-531012	22500-502012	-/12:1	-/66,4	-/79,6	-/99,6
22500-531013	22500-502014	-/13,5:1	-/62,8	-/75,4	-/94,2
22500-531019	22500-502019	-/19:1	-/78,2	-/93,8	-/117,3
22500-531023	22500-502023	-/23:1	-/71,1	-/85,3	-/106,6
22500-531027	22500-502027	-/27:1	-/64,5	-/77,4	-/96,7
22500-531035	22500-502035	-/35:1	-/56,7	-/68	-/85
22500-531046	22500-502046	-/46:1	-/50,6	-/60,7	-/75,9
22500-531055	22500-502055	-/55:1	-/46,2	-/55,4	-/69,3
22500-531075	22500-502069	-/69:1	-/41,4	-/49,6	-/62,8

Worm gears, right-hand

centre distance 53 mm

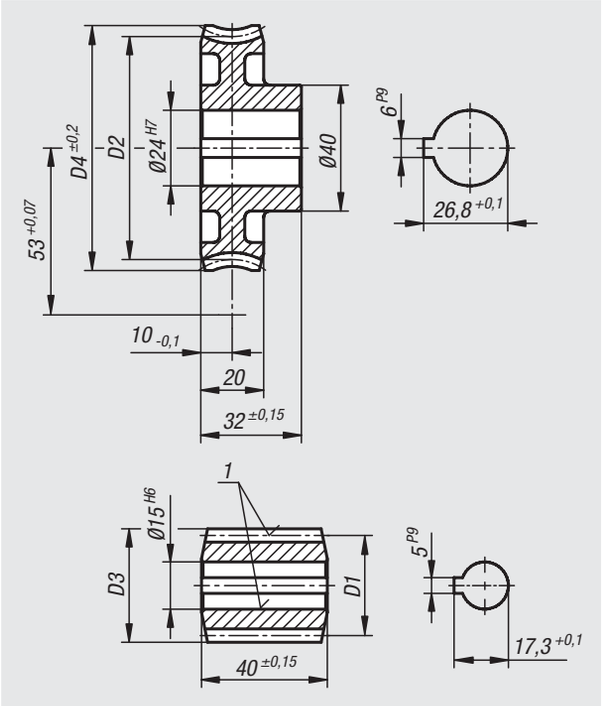

Material:
Worm screw steel.
Worm wheel CuZn37Mn3Al2PbSi-S40.

Version:
Worm screw with right-hand pitch, case-hardened HV 620 – 700, flanks and hole ground.

Sample order:
nlm 22500-531004 Worm screw
nlm 22500-532004 Worm wheel

Note for ordering:
Wheels/screws can only be combined to form a worm gear if they have the same centre distance and transmission ratio.

Note:
A worm gear consists of a worm screw (shaft) and a worm wheel. Suitable for forming worm drives with a 90° shaft angle. A worm drive enables very large speed reduction ratios with a single stage.

The toothing has the flank shape K. The engagement angle is 15°. The worm gears are pre-bored.

The stated T2 output torques are the permissible output torques on the worm wheel. These apply for an input speed of 2800 rpm of the worm screw.

The worm gears are suitable for continuous operation at high speeds and high torques.

Drawing reference:
1) ground

Worm gears, right-hand

centre distance 53 mm

Order No. worm	Order No. worm wheel	Transmission ratio	Pitch angle	Module	Z1	D1	D3	Z2	D2	D4
22500-531004	**22500-532004**	-/4,75:1	25° 51	3,5	4/-	32,1/-	39,1/-	-/19	-/73,9	-/83
22500-531006	**22500-532006**	-/6,67:1	19° 17	3,5	3/-	31,8/-	38,8/-	-/20	-/74,2	-/84
22500-531008	**22500-532009**	-/9,67:1	13° 52	2,5	3/-	31,29/-	36,29/-	-/29	-/74,71	-/82
22500-531012	**22500-532013**	-/13,5:1	10° 23	2,75	2/-	30,5/-	36/-	-/27	-/75,5	-/84
22500-531013	**22500-532015**	-/15:1	9° 38	2,5	2/-	29,9/-	34,9/-	-/30	-/76,1	-/83
22500-531019	**22500-532021**	-/21:1	6° 17	3,5	1/-	32/-	39/-	-/21	-/74	-/83
22500-531023	**22500-532025**	-/25:1	5° 38	3	1/-	30,58/-	36,58/-	-/25	-/75,42	-/84
22500-531028	**22500-532028**	-/28:1	3° 59	2,5	1/-	36/-	41/-	-/28	-/70	-/77,5
22500-531027	**22500-532030**	-/30:1	4° 40	2,5	1/-	30,73/-	35,73/-	-/30	-/75,27	-/83
22500-531035	**22500-532038**	-/38:1	3° 51	2	1/-	29,78/-	33,78/-	-/38	-/76,21	-/83
22500-531046	**22500-532050**	-/50:1	2° 47	1,5	1/-	30,85/-	33,85/-	-/50	-/75,15	-/81
22500-531055	**22500-532060**	-/60:1	2° 19	1,25	1/-	30,9/-	33,4/-	-/60	-/75,1	-/80
22500-531075	**22500-532075**	-/75:1	1° 51	1	1/-	30,9/-	32,9/-	-/75	-/75,1	-/78

Order No. worm	Order No. worm wheel	Transmission ratio	Output torque T2 (Nm) mineral grease	Output torque T2 (Nm) mineral oil	Output torque T2 (Nm) synthetic oil
22500-531004	**22500-532004**	-/4,75:1	-/45	-/54	-/67,5
22500-531006	**22500-532006**	-/6,67:1	-/67	-/81	-/101
22500-531008	**22500-532009**	-/9,67:1	-/77	-/93	-/116
22500-531012	**22500-532013**	-/13,5:1	-/80	-/96	-/120
22500-531013	**22500-532015**	-/15:1	-/75	-/90	-/113
22500-531019	**22500-532021**	-/21:1	-/94	-/113	-/141
22500-531023	**22500-532025**	-/25:1	-/84	-/101	-/127
22500-531028	**22500-532028**	-/28:1	-/87	-/104	-/130
22500-531027	**22500-532030**	-/30:1	-/77	-/93	-/116
22500-531035	**22500-532038**	-/38:1	-/68	-/81	-/102
22500-531046	**22500-532050**	-/50:1	-/60	-/72	-/90
22500-531055	**22500-532060**	-/60:1	-/55	-/66	-/82
22500-531075	**22500-532075**	-/75:1	-/49	-/59	-/74

Worm gears, right-hand

centre distance 63 mm

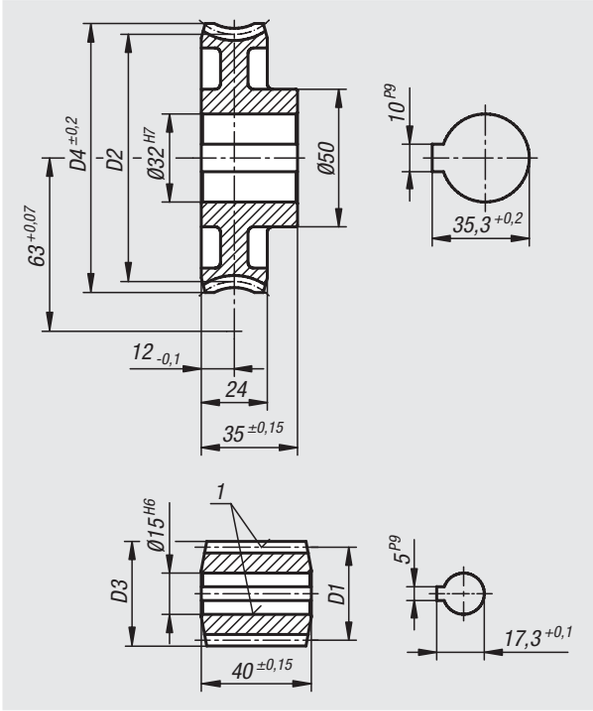

Material:
Worm screw steel.
Worm wheel CuZn37Mn3Al2PbSi-S40.

Version:
Worm screw with right-hand pitch, case-hardened HV 620 – 700, flanks and hole ground.

Sample order:
nlm 22500-531004 Worm screw
nlm 22500-632006 Worm wheel

Note for ordering:
Wheels/screws can only be combined to form a worm gear if they have the same centre distance and transmission ratio.

Note:
A worm gear consists of a worm screw (shaft) and a worm wheel. Suitable for forming worm drives with a 90° shaft angle. A worm drive enables very large speed reduction ratios with a single stage.

The toothing has the flank shape K. The engagement angle is 15°. The worm gears are pre-bored.

The stated T2 output torques are the permissible output torques on the worm wheel. These apply for an input speed of 2800 rpm of the worm screw.

The worm gears are suitable for continuous operation at high speeds and high torques.

Drawing reference:
1) ground

Worm gears, right-hand

centre distance 63 mm

Order No. worm	Order No. worm wheel	Transmission ratio	Pitch angle	Module	Z1	D1	D3	Z2	D2	D4
22500-531004	**22500-632006**	-/6:1	25° 51	3,5	4/-	32,1/-	39,1/-	-/24	-/93,9	-/104
22500-531008	**22500-632012**	-/12:1	13° 52	2,5	3/-	31,29/-	36,29/-	-/36	-/94,71	-/104
22500-631019	**22500-632019**	-/19:1	10° 8	2,5	2/-	28,4/-	33,4/-	-/38	-/97,6	-/104
22500-531019	**22500-632026**	-/26:1	6° 17	3,5	1/-	32/-	39/-	-/26	-/94	-/104
22500-631034	**22500-632034**	-/34:1	5° 9	2,75	1/-	30,6/-	36,1/-	-/34	-/95,4	-/104
22500-531035	**22500-632048**	-/48:1	3° 51	2	1/-	29,78/-	33,78/-	-/48	-/96,22	-/104
22500-531046	**22500-632063**	-/63:1	2° 47	1,5	1/-	30,85/-	33,85/-	-/63	-/95,15	-/101
22500-651075	**22500-632070**	-/70:1	1° 59	1,25	1/-	36,1/-	38,6/-	-/70	-/89,9	-/97

Order No. worm	Order No. worm wheel	Transmission ratio	Output torque T2 (Nm) mineral grease	Output torque T2 (Nm) mineral oil	Output torque T2 (Nm) synthetic oil
22500-531004	**22500-632006**	-/6:1	-/89	-/107	-/134
22500-531008	**22500-632012**	-/12:1	-/141	-/170	-/212
22500-631019	**22500-632019**	-/19:1	-/133	-/159	-/199
22500-531019	**22500-632026**	-/26:1	-/172	-/206	-/258
22500-631034	**22500-632034**	-/34:1	-/148	-/178	-/222
22500-531035	**22500-632048**	-/48:1	-/125	-/150	-/187
22500-531046	**22500-632063**	-/63:1	-/111	-/133	-/166
22500-651075	**22500-632070**	-/70:1	-/112	-/135	-/169

Worm gears, right-hand

centre distance 65 mm

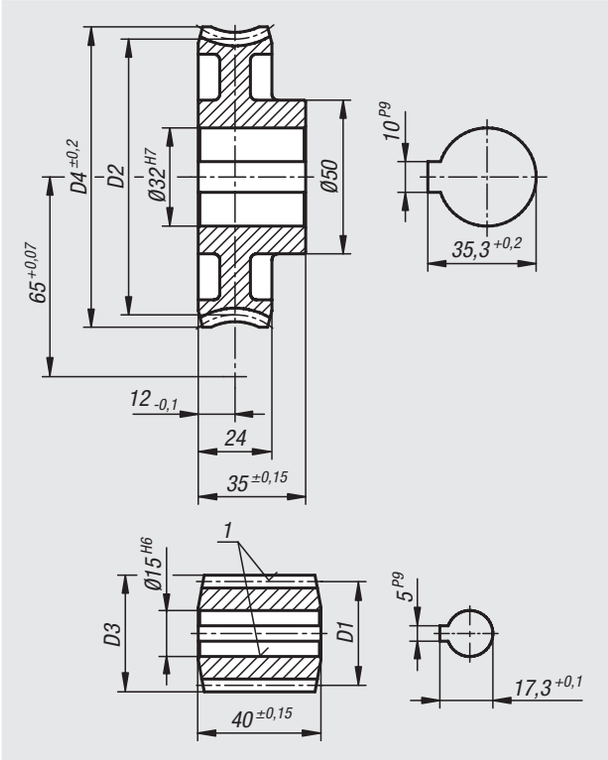

Material:
Worm screw steel.
Worm wheel CuZn37Mn3Al2PbSi-S40.

Version:
Worm screw with right-hand pitch, case-hardened HV 620 – 700, flanks and hole ground.

Sample order:
nlm 22500-531004 Worm screw
nlm 22500-652006 Worm wheel

Note for ordering:
Wheels/screws can only be combined to form a worm gear if they have the same centre distance and transmission ratio.

Note:
A worm gear consists of a worm screw (shaft) and a worm wheel. Suitable for forming worm drives with a 90° shaft angle. A worm drive enables very large speed reduction ratios with a single stage.

The toothing has the flank shape K. The engagement angle is 15°. The worm gears are pre-bored.

The stated T2 output torques are the permissible output torques on the worm wheel. These apply for an input speed of 2800 rpm of the worm screw.

The worm gears are suitable for continuous operation at high speeds and high torques.

Drawing reference:
1) ground

Worm gears, right-hand

centre distance 65 mm

Order No. worm	Order No. worm wheel	Transmission ratio	Pitch angle	Module	Z1	D1	D3	Z2	D2	D4
22500-531004	**22500-652006**	-/6,25:1	25° 51	3,5	4/-	32,1/-	39,1/-	-/25	-/97,9	-/108
22500-531008	**22500-652012**	-/12,66:1	13° 52	2,5	3/-	31,29/-	36,29/-	-/38	-/98,71	-/108
22500-631019	**22500-652020**	-/20:1	10° 8	2,5	2/-	28,4/-	33,4/-	-/40	-/101,6	-/108
22500-531019	**22500-652028**	-/28:1	6° 17	3,5	1/-	32/-	39/-	-/28	-/98	-/108
22500-631034	**22500-652036**	-/36:1	5° 9	2,75	1/-	30,6/-	36,1/-	-/36	-/99,4	-/108
22500-531035	**22500-652050**	-/50:1	3° 51	2	1/-	29,78/-	33,78/-	-/50	-/100,22	-/108
22500-531046	**22500-652066**	-/66:1	2° 47	1,5	1/-	30,85/-	33,85/-	-/66	-/99,15	-/107
22500-651075	**22500-652075**	-/75:1	1° 59	1,25	1/-	36,1/-	38,6/-	-/75	-/93,9	-/100

Order No. worm	Order No. worm wheel	Transmission ratio	Output torque T2 (Nm) mineral grease	Output torque T2 (Nm) mineral oil	Output torque T2 (Nm) synthetic oil
22500-531004	**22500-652006**	-/6,25:1	-/101	-/121	-/151
22500-531008	**22500-652012**	-/12,66:1	-/156	-/187	-/234
22500-631019	**22500-652020**	-/20:1	-/146	-/176	-/220
22500-531019	**22500-652028**	-/28:1	-/192	-/230	-/288
22500-631034	**22500-652036**	-/36:1	-/164	-/197	-/246
22500-531035	**22500-652050**	-/50:1	-/137	-/164	-/205
22500-531046	**22500-652066**	-/66:1	-/122	-/146	-/183
22500-651075	**22500-652075**	-/75:1	-/125	-/150	-/188

Worm gears, right-hand

centre distance 80 mm

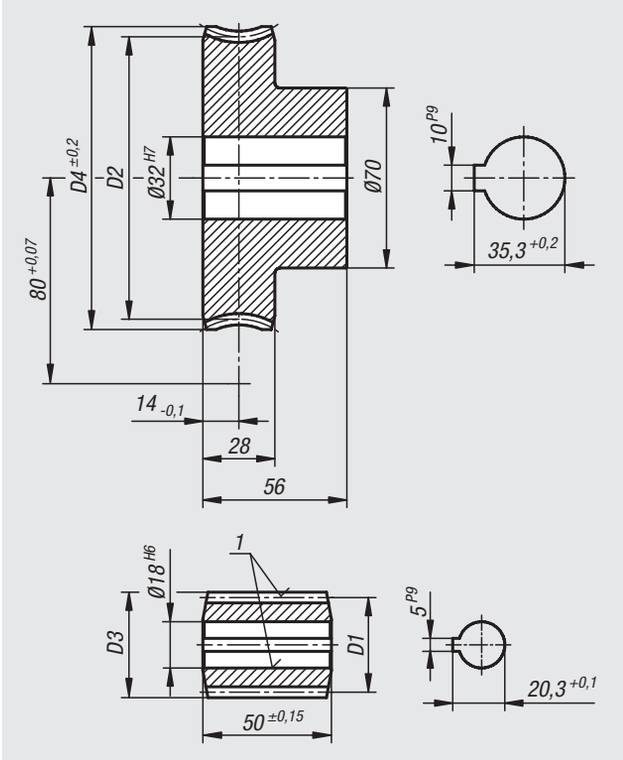

Material:
Worm screw steel.
Worm wheel CuZn37Mn3Al2PbSi-S40.

Version:
Worm screw with right-hand pitch, case-hardened HV 620 – 700, flanks and hole ground.

Sample order:
nlm 22500-801006 Worm screw
nlm 22500-802006 Worm wheel

Note for ordering:
Wheels/screws can only be combined to form a worm gear if they have the same centre distance and transmission ratio.

Note:
A worm gear consists of a worm screw (shaft) and a worm wheel. Suitable for forming worm drives with a 90° shaft angle. A worm drive enables very large speed reduction ratios with a single stage.

The toothing has the flank shape K. The engagement angle is 15°. The worm gears are pre-bored.

The stated T2 output torques are the permissible output torques on the worm wheel. These apply for an input speed of 2800 rpm of the worm screw.

The worm gears are suitable for continuous operation at high speeds and high torques.

Drawing reference:
1) ground

Worm gears, right-hand

centre distance 80 mm

Order No. worm	Order No. worm wheel	Transmission ratio	Pitch angle	Module	Z1	D1	D3	Z2	D2	D4
22500-801006	**22500-802006**	-/6,75:1	23° 35	4	4/-	40/-	48/-	-/27	-/120	-/132
22500-801012	**22500-802012**	-/12:1	16° 36	2,5	4/-	35/-	40/-	-/48	-/125	-/132,5
22500-801020	**22500-802020**	-/20:1	8° 58	3	2/-	38,5/-	44,5/-	-/40	-/121,5	-/130,5
22500-801030	**22500-802030**	-/30:1	5° 44	4	1/-	40/-	48/-	-/30	-/120	-/132,5
22500-801050	**22500-802050**	-/50:1	4° 6	2,5	1/-	35/-	40/-	-/50	-/125	-/132,5
22500-801080	**22500-802080**	-/80:1	2° 9	1,5	1/-	40/-	43/-	-/80	-/120	-/124,5

Order No. worm	Order No. worm wheel	Transmission ratio	Output torque T2 (Nm) mineral grease	Output torque T2 (Nm) mineral oil	Output torque T2 (Nm) synthetic oil
22500-801006	**22500-802006**	-/6,75:1	150	180	225
22500-801012	**22500-802012**	-/12:1	243	290	365
22500-801020	**22500-802020**	-/20:1	290	348	435
22500-801030	**22500-802030**	-/30:1	348	417	522
22500-801050	**22500-802050**	-/50:1	248	297	372
22500-801080	**22500-802080**	-/80:1	213	255	320

Worm drives

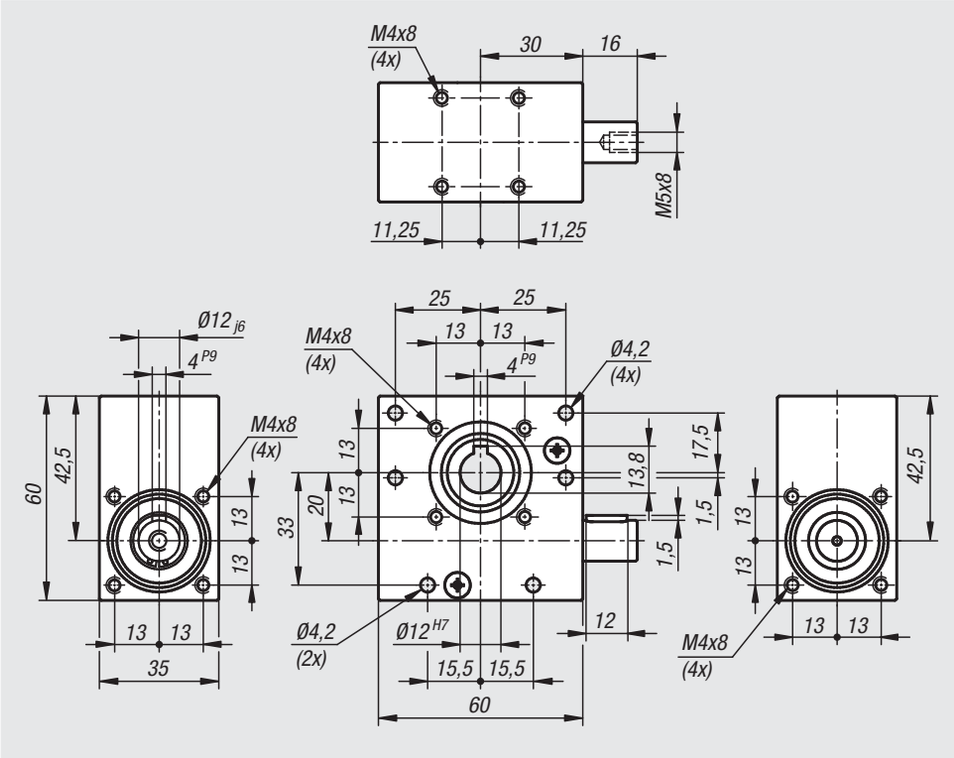

Material:
Housing aluminium.
Worm screw steel, worm wheel special brass.

Version:
Housing anodized.
Worm screw case hardened.
Ball bearing with rubber sealing washer RS.

Sample order:
nlm 22700-13

Note:
Universally applicable and maintenance-free worm drive in one size with a centre distance of 20 mm and 7 different ratios. The housing is sealed to prevent grease leakage and keep dust out. These are left hand worm gears. The rotation direction on the shaft is arbitrary.

- smooth power transmission
- simple screw fastening
- quiet

Temperature range:
-20 °C to +60 °C.

Attention:
FR permissible radial force at FA=0
FA permissible axial force at FR=0

Technical data:
Radial backlash: ±1°
Duty cycle: 20% (at 5 min.)
Service life: ca. 1000 hours (at full load, speed 500 rpm and duty cycle 20%)

Worm drives

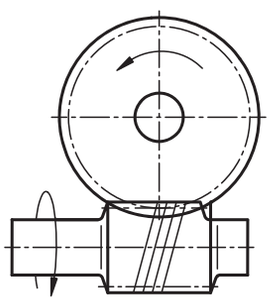

Order No.	Transmission ratio	Self-locking	speed range n rpm	Max. driving torque M Nm
22700-13	13:1	No	100 / 500 / 1000	2,1 / 1,8 / 1,5
22700-15	15:1	No	100 / 500 / 1000	1,5 / 1,3 / 1,0
22700-18	18:1	No	100 / 500 / 1000	1,1 / 0,9 / 0,7
22700-23	23:1	Yes	100 / 500 / 1000	0,9 / 0,7 / 0,5
22700-30	30:1	Yes	100 / 500 / 1000	0,6 / 0,5 / 0,4
22700-40	40:1	Yes	100 / 500 / 1000	0,4 / 0,3 / 0,3
22700-65	65:1	Yes	100 / 500 / 1000	0,2 / 0,2 / 0,2

Order No.	Max. output torque M Nm	Shaft load FR N	Shaft load FA N	Efficiency %
22700-13	15 / 13 / 11	200	200	56
22700-15	12 / 10 / 8	250	250	52
22700-18	11 / 9 / 7	250	250	55
22700-23	10 / 8 / 6	250	250	50
22700-30	8,5 / 7 / 5,5	350	350	45
22700-40	5,5 / 4,8 / 4	400	400	39
22700-65	4,5 / 3,8 / 3	500	500	29

Bevel gears

plastic housing

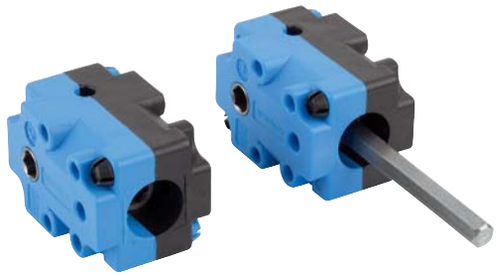

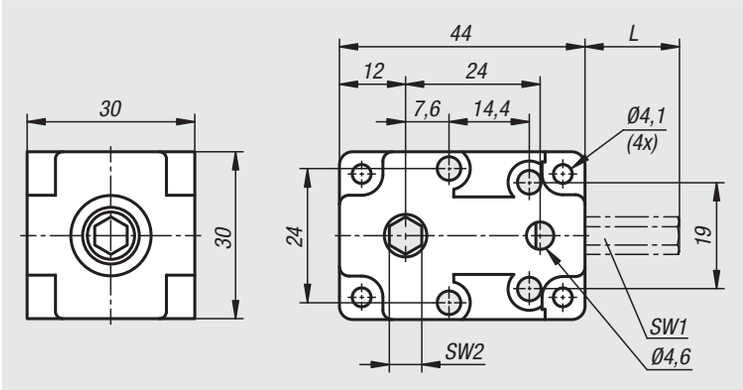

Material:
Housing fibreglass reinforced plastic.
Bevel gears steel.

Version:
Bevel gears case hardened.
Ball bearings with sealing washers.

Sample order:
nlm 22710-111000

Note:
Universally applicable and maintenance-free bevel gear transmission for redirecting rotational movements by 90°. The rotation direction is arbitrary.

These bevel gears are suitable for manual drives and for temporary mechanical drives at a low speed.

Power input over a hexagon socket. Power output over a hexagon socket or an hexagonal drive shaft.

Temperature range:
0 °C to +40 °C.

Technical data:
Duty cycle: 20% (at 5 min.)

Order No.	Transmission ratio	max. speed rpm	Max. driving torque M Nm	SW1	SW2	L
22710-111000	1:1	150	4	6	6	-
22710-111050	1:1	150	4	6	6	50
22710-111080	1:1	150	4	6	6	80
22710-111100	1:1	150	4	6	6	100

Bevel gears

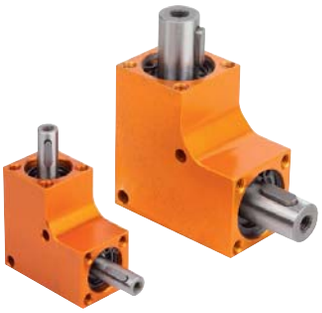

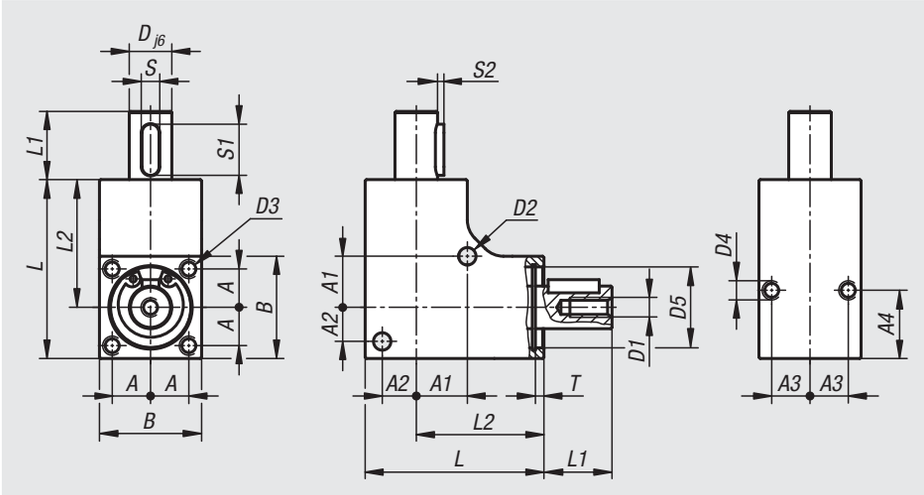

Material:
Housing aluminium. Bevel gears steel.

Version:
Housing anodized.
Bevel gears surface hardened.
Ball bearing with rubber sealing washer RS.

Sample order:
nlm 22712-1832

Note:
Universally applicable and maintenance-free bevel gear in seven different sizes with the ratio 1:1. The housing is sealed to prevent grease leakage and keep dust out. Can be mounted in any position. The rotation direction is arbitrary.

- smooth power transmission
- simple screw fastening
- quiet

Temperature range:
-20 °C to +60 °C.

Attention:
FR permissible radial force at FA=0
FA permissible axial force at FR=0

Technical data:
Duty cycle: 20% (at 5 min.)
Service life: ca. 1000 hours (at full load, speed 500 rpm and duty cycle 20%)

Order No.	Transmission ratio	speed range n rpm	Max. torque Nm	D	A	A1	A2	A3	A4	B
22712-1832	1:1	100 / 500 / 1000	0,35 / 0,1 / 0,05	6	6,5	8,5	6	6,5	11	18
22712-2035	1:1	100 / 500 / 1000	0,75 / 0,3 / 0,15	8	7,5	10	7	7,5	10	20
22712-2442	1:1	100 / 500 / 1000	2,5 / 1 / 0,5	10	9	12	8	9	16	24
22712-2646	1:1	100 / 500 / 1000	4 / 1,5 / 0,75	12	10	13	9	10	16	26
22712-3053	1:1	100 / 500 / 1000	5 / 2 / 1	12	11	15	11	11	16	30
22712-3256	1:1	100 / 500 / 1000	8 / 3 / 1,5	12	12	17	12	12	16	32
22712-3560	1:1	100 / 500 / 1000	10 / 4 / 2	12	13	17,5	13,5	13	16	35

Order No.	D1	D2	D3	D4	D5	L	L1	L2	S	S1	S2	T	Shaft load FR N	Shaft load FA N
22712-1832	M3x8	3,1	M3x10	M3x6	13	32	12	23	2	8	0,8	2,1	60	60
22712-2035	M3x8	3,1	M3x10	M3x6	16	35	12	25	2	8	0,8	2,05	100	100
22712-2442	M4x8	4,1	M4x10	M4x8	19	42	16	30	4	12	1,5	2	120	120
22712-2646	M5x8	4,1	M4x10	M4x8	21	46	16	33	4	12	1,5	2	140	140
22712-3053	M5x8	4,1	M4x10	M4x8	24	53	16	38	4	12	1,5	2,1	240	240
22712-3256	M5x8	4,1	M4x10	M4x8	28	56	16	40	4	12	1,5	2,1	550	550
22712-3560	M5x8	4,1	M4x10	M4x8	30	60	16	42,5	4	12	1,5	2,1	550	550

Bevel gears

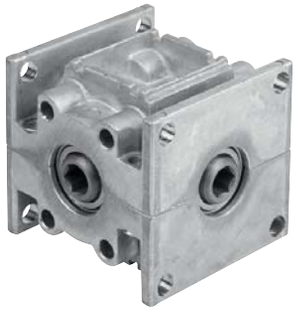

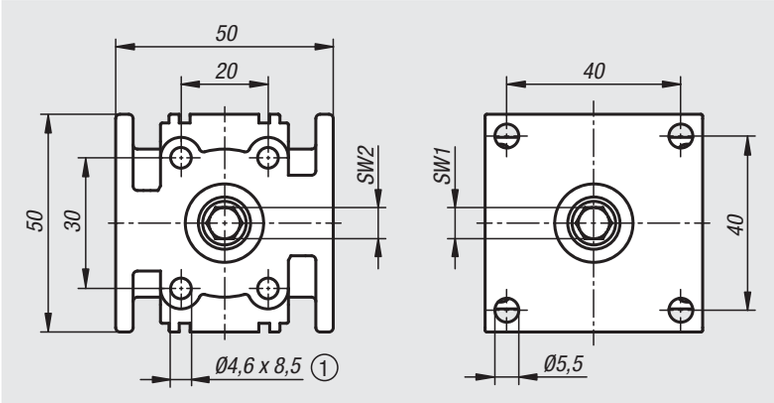

Material:
Housing die-cast zinc.
Bevel gears steel.

Version:
Housing bright.
Bevel gears surface hardened.
Ball bearing with sealing washer RS.

Sample order:
nlm 22714-1171

Note:
Universally applicable and maintenance-free bevel gear, particularly suitable for drives with electric motors. The housing is sealed to prevent grease leakage and keep dust out. Can be mounted in any position. The rotation direction is arbitrary.

Drive and output over a hexagon socket.

This bevel gear transmission is ideal for use as a diversion drive, distribution transmission or gear reducer for electric motors; e.g. for louvre or actuators in special machine constructions.

Temperature range:
-20 °C to +40 °C.

Technical data:
Duty cycle: 20% (at 5 min.)

Drawing reference:
1) For DIN 7500 M5 self-tapping screws.

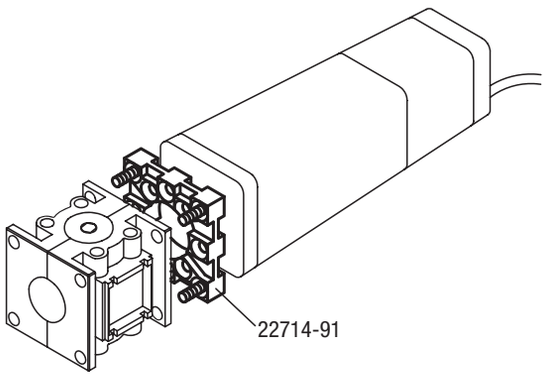

Number and arrangement of drive/output:

One output
22714-1171

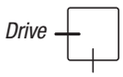

Two outputs opposing
22714-1172

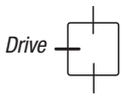

Two outputs 90°
22714-1173

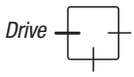

Three outputs
22714-1174

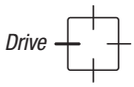

Order No.	Description	Transmission ratio	max. speed rpm	Max. driving torque M Nm	SW1	SW2
22714-1171	bevel gear	1:1	150	10	7	7
22714-1172	bevel gear	1:1	150	10	7	7
22714-1173	bevel gear	1:1	150	10	7	7
22714-1174	bevel gear	1:1	150	10	7	7
22714-91	mounting flange	-	-	-	-	-

23000

Couplings
Rigid couplings
Keyless locking couplings
Cardan joints
Quick-fit couplings
Bearings
Seals

Technical information for couplings

Note:
The zero backlash, flexible metal bellows or elastomer couplings are particularly suited to highly accurate drives with average torque values. They are the ideal solution for accurately connecting two shaft journals at a true angle. Axial, radial and angular displacement between two ends of a shaft can be compensated within defined limits. This produces minimal bearing stresses as a result of the low restoring forces. A strong shaft to hub connection guarantees zero backlash transmission of torque, even without additional parallel key. Low mass moments of inertia and a high quality kinetic energy guarantee excellent dynamic behaviour, even at high revolutions. As a basic principle, the couplings are wear and maintenance-free. The range of possible uses extends from challenging drive systems in general mechanical engineering through applications in metrology and automatic control to the spindle and axial drives of machine tools. Other typical examples of their use include textile, packaging and timber processing machines as well as industrial robots and multi-spindle drilling heads.

Specifications

Comparison	Metal bellows couplings	Elastomer couplings	Beam couplings
Major functional features	– very high torsion resistance, therefore accurate transfer of the angle of rotation – low mass moments of inertia – full metal version – minimal restoring forces on the bearing	– plug-in (blind assembly is possible) – vibration dampening – no-play, due to pre-tensioning of the coupling star in the claws – 23021 DIN 69002 suitable for the highest speeds	– compact design – play-free, absolute synchronism – high torsion resistance – low mass moments of inertia – full metal version – models in aluminium and stainless steel
Connection or compensating elements	– stainless steel metal bellows	– polyurethane elastomer star	– full metal version with slotted structure
Hub version	– easy to assemble clamp hub (strong, no-play)	– easy to assemble clamp hub – conical connection to clamping ring hub	– easy to assemble clamp hub, fixed or removable (strong, no-play)
Temperature range	max. 200 °C	-30 °C to +90 °C	-50 °C to +150 °C
Speeds	Couplings are prebalanced. Additional balancing is recommended for revolutions in excess of 5000 r.p.m.	Version with clamping ring hub (23021) is suitable for up to 20000 r.p.m.	Depending on model, suitable for speeds up to 10000 r.p.m.

Configuration

Rough calculation:

$$M_N \geqq 1{,}5 \cdot M_{max.} \text{ [Nm]}$$

$M_N \triangleq$ nom. torque of coupling

$M_{max.} \triangleq$ max. motor torque

For accurate dimensioning the actual acting torques must be calculated from the cutting or acceleration forces. In exceptional cases and only for short periods, e.g. during a collision, increased loading of up to twice the nominal torque is possible.

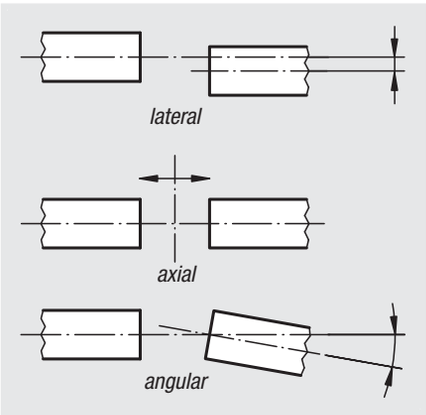

Shaft displacement
Axial and angular displacement are generally not a problem and are also easy to check. Conversely, great attention should be paid to radial shaft displacement, i.e. the lateral parallel displacement of the axes of rotation. This error must not exceed the value prescribed in the table.

Metal bellows couplings

with radial clamping hub

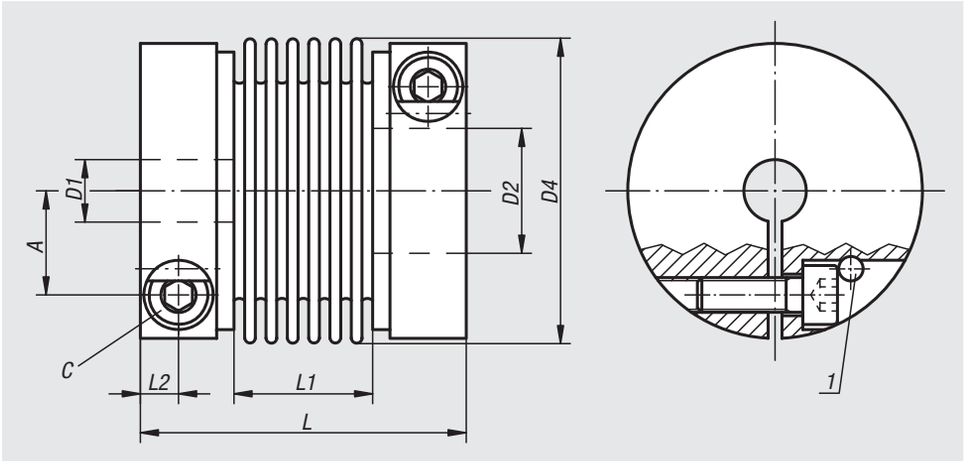

Material:
Hub aluminium.
Bellows stainless steel.

Version:
Bright.

Sample order:
nlm 23000-012,
D1 = 6
D2 = 6
(The hubs are supplied pre-bored).

Note:
Radial clamping of the hub for short mounting times and easy installation even in difficult to reach spaces. Take note of the required clamping screw tightening torque.

Temperature range:
-40 °C to +200 °C

Assembly:
The shaft to hub bore fit should be a transition fit. The play should be min. 0.01 mm and max. 0.04 mm. i.e:
shaft Ø 28 k6
bore Ø 28 F6.
Bores smaller than D1/D2 min. are possible, however an optimal transfer of the nominal torque is no longer guaranteed.
As the metal bellows are made of thin stainless steel plate, special care should be taken during installation and removal. Damages to the bellows can render the coupling unusable.

On request:
Hub bores D1 and D2 with separate tolerance class or range.

Drawing reference:
1) EASY clamp system from size 20

Order No.	Size	Nominal torque Nm	Moment of inertia (10^{-3} kgm^2)	Torsion resistance Nm/arcmin	Max. axial shaft displacement ±	Max. lateral shaft displacement	Axial spring stiffness N/mm	Lateral spring stiffness N/mm	Tightening torque of screws Nm
23000-001	1	1	0,0004	0,09	0,3	0,2	21	26	1
23000-004	4	4	0,003	0,46	0,4	0,2	35	65	2
23000-007	7	7	0,014	1,1	0,6	0,25	45	60	4
23000-012	12	12	0,03	2,05	0,7	0,25	40	70	7
23000-020	20	20	0,14	5,2	0,8	0,25	51	190	14
23000-060	60	60	0,29	8,7	0,9	0,3	49	260	35
23000-170	170	170	0,83	17,5	1	0,3	80	470	65
23000-400	400	400	2,42	47,1	1	0,3	100	640	115
23000-600	600	600	4,7	66,9	1	0,3	100	980	200

Order No.	D1/D2 predrilled	D1/D2 min.	D1/D2 max.	D4	A	C DIN 912-10.9	L	L1	L2
23000-001	3	3	6	16,5	4,6	M2,5	31,5	13,5	3,3
23000-004	4	5	10	24,5	7,5	M3	43,5	17,5	4,4
23000-007	5	6	17	34	11	M4	57	29	5
23000-012	5	6	19	39,5	13	M5	62	29	6
23000-020	7	9	30	56	19	M6	70	30	7,5
23000-060	12	18	34	66	22	M8	77	33	8,5
23000-170	15	22	43	82	28,5	M10	92	40	10,5
23000-400	24	34	55	101	35	M12	106	48	12
23000-600	31	35	70	122	43,5	M14	120	52	13,5

Metal bellows couplings

clamping with grub screw

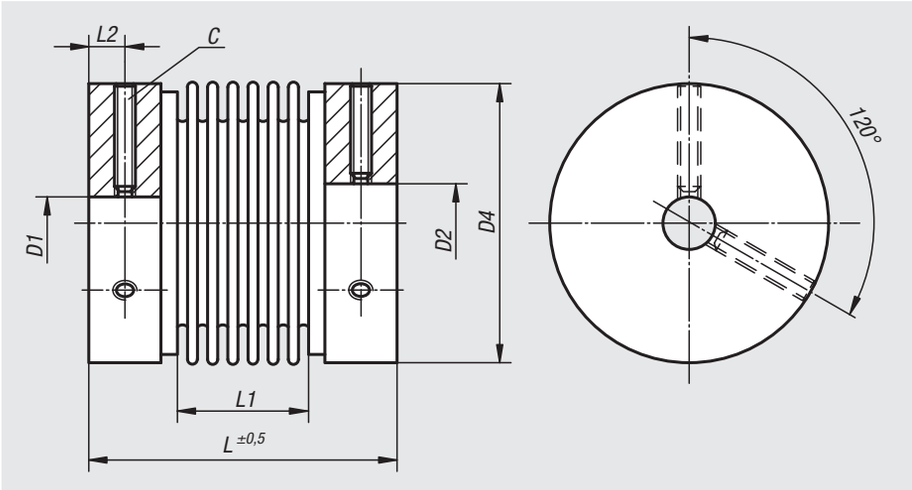

Material:
Hub aluminium.
Bellows stainless steel.

Version:
Bright.

Sample order:
nlm 23002-0004,
D1 = 3
D2 = 3
(The hubs are supplied pre-bored).

Note:
Clamping the hub with a grub screw is a cost-effective alternative to the metal bellows couplings with radial clamping hub (23000). Short mounting times and an easy installation even in difficult to reach places. Take note of the required tightening torque for the grub screw. To ease removal, a flat milled on the shaft is recommended.

Temperature range:
-20 °C to +90 °C.

Assembly:
The shaft to hub bore fit should be a transition fit. The play should be min. 0.01 mm and max. 0.04 mm. i.e:
shaft Ø 5 k6
bore Ø 5 G7.
Bores smaller than D1/D2 min. are possible, however an optimal transfer of the nominal torque is no longer guaranteed.
As the metal bellows are made of thin stainless steel plate, special care should be taken during installation and removal. Damages to the bellows can render the coupling unusable.

On request:
Hub bores D1 and D2 with separate tolerance class or range.

Order No.	Size	Nominal torque Nm	Moment of inertia (10^{-3} kgm²)	Torsion resistance (10^{-3} Nm/arcmin)	Max. axial shaft displacement ±	Max. lateral shaft displacement	Axial spring stiffness N/mm	Lateral spring stiffness N/mm
23002-0004	0,4	0,4	0,00019	50	0,35	0,1	10	15
23002-0005	0,9	0,9	0,00019	90	0,3	0,1	21	26
23002-0020	2	2	0,0029	230	0,5	0,1	15	15
23002-0040	4	4	0,0032	460	0,4	0,1	35	65
23002-0060	6	6	0,016	1100	0,6	0,25	45	60
23002-0080	8	9	0,028	1300	0,8	0,25	16	24

Order No.	Tightening torque of screws Nm	D1/D2 predrilled	D1/D2 min.	D1/D2 max.	D4	C (DIN 916)	L	L1	L2
23002-0004	1	3	3	8	16	M3	26	12	2,3
23002-0005	1	3	3	8	16	M3	27	13	2,3
23002-0020	4	5	5	15	25	M4	38	16	3,5
23002-0040	4	5	5	15	25	M4	39	17	3,5
23002-0060	8	6	6	20	35	M5	54	29	4,3
23002-0080	10	6	6	26	41	M6	54	26	5

Beam couplings

with radial clamping hub, aluminium

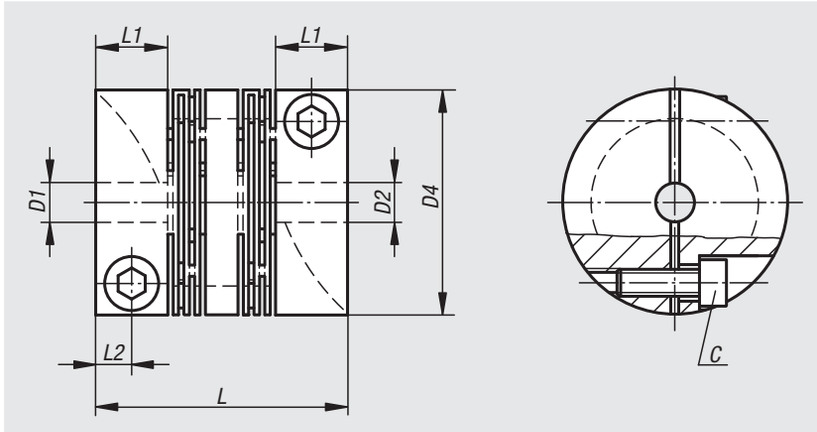

Material:
Aluminium.

Version:
Bright.

Sample order:
nlm 23010-1016,
D1 = 2.5
D2 = 2.5
(The hubs are supplied pre-bored).

Note:
Zero backlash, torsionally rigid, resiliently flexible and maintenance-free full metal coupling for transmitting angle synchronous rotary movement. The innovative slit structure makes possible a very good axial, radial and angular flexibility with low reset force. Ideal for servomotors.

Temperature range:
-50 °C to +150 °C.

Assembly:
Recommended shaft tolerances h7.

On request:
Hub bores D1 and D2 with separate tolerance class or range.

Attention:
Procedure for enlarging pre-drilled bores D1/D2:

Drill the bore out using a small as possible drill or milling cutter. Use a single point tool to turn or bore the hole out to its finished size. Ensure that the coupling is securely held during the machining process and that the drill feed is not too high. The cut depth should not exceed 0.5 mm and the feed for the single point tool should also be not too high.

Order No.	Size	Nominal torque Nm	Moment of inertia (10^{-3} kgm^2)	Torsion resistance Nm/arcmin	Max. axial shaft displacement ±	Max. lateral shaft displacement	Max. angular shaft displacement	Axial spring stiffness N/mm	Lateral spring stiffness N/mm	max. speed rpm
23010-1016	16	3	0,001	0,09	0,3	0,2	1°	155	234	10000
23010-1018	18	3	0,0003	0,12	0,3	0,2	1°	39	176	10000
23010-1020	20	5	0,0015	0,15	0,3	0,2	1°	192	243	9500
23010-1022	22	3	0,0008	0,17	0,3	0,2	1°	80	369	9500
23010-1025	25	7	0,0043	1,02	0,3	0,2	1°	140	437	8000
23010-1030	30	10	0,011	1,45	0,4	0,3	1°	170	363	6000
23010-1040	40	19	0,035	3,35	0,4	0,3	1°	270	379	5000
23010-1050	50	35	0,114	10,18	0,5	0,3	1°	410	853	5000
23010-1060	60	70	0,285	20,65	0,5	0,3	1°	510	1201	4500
23010-1070	70	130	0,480	27,55	0,5	0,3	1°	1900	2002	4000

Order No.	D1/D2 predrilled	D1/D2 min.	D1/D2 max.	D4	L	L1	L2	C (DIN 912-12.9)	Tightening torque of screws Nm
23010-1016	2,5	3	6	16	23	7	3,5	M2,5x6	1
23010-1018	2,5	3	6	18	16,6	5,5	2,75	M2,5x8	1
23010-1020	2,5	3	8	20	28	8	4	M2,5x8	1
23010-1022	2,5	3	10	22	20	5,5	2,75	M2,5x8	1
23010-1025	3,5	4	12	25	28	8	4	M3x10	2
23010-1030	5,5	6	14	30	40	11	5,5	M4x10	4
23010-1040	5,5	6	18	40	48	11	5,5	M5x14	9
23010-1050	9,5	10	26	50	65	19	9,5	M6x16	14
23010-1060	9,5	10	30	60	80	25	12,5	M8x18	30
23010-1070	14,5	15	35	70	95	25	12,5	M8x25	30

Beam couplings

with radial clamping hub, stainless steel

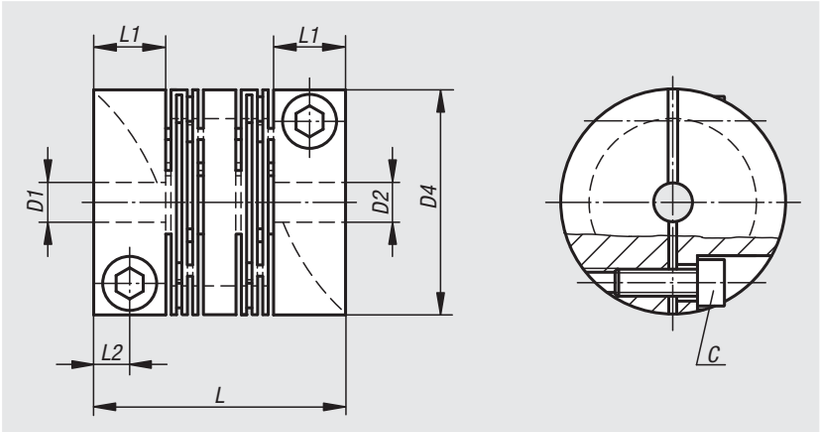

Material:
Stainless steel 1.4305.

Version:
Bright.

Sample order:
nlm 23010-2016,
D1 = 2.5
D2 = 2.5
(The hubs are supplied pre-bored).

Note:
Zero backlash, torsionally rigid, resiliently flexible and maintenance-free full metal coupling for transmitting angle synchronous rotary movement. The innovative slit structure makes possible a very good axial, radial and angular flexibility with low reset force. Ideal for servomotors.

Temperature range:
-50 °C to +150 °C.

Assembly:
Recommended shaft tolerances h7.

On request:
Hub bores D1 and D2 with separate tolerance class or range.

Attention:
Procedure for enlarging pre-drilled bores D1/D2:

Drill the bore out using a small as possible drill or milling cutter. Use a single point tool to turn or bore the hole out to its finished size. Ensure that the coupling is securely held during the machining process and that the drill feed is not too high. The cut depth should not exceed 0.5 mm and the feed for the single point tool should also be not too high.

Order No.	Size	Nominal torque Nm	Moment of inertia (10^{-3} kgm^2)	Torsion resistance Nm/arcmin	Max. axial shaft displacement ±	Max. lateral shaft displacement	Max. angular shaft displacement	Axial spring stiffness N/mm	Lateral spring stiffness N/mm	max. speed rpm
23010-2016	16	6	0,0025	0,23	0,3	0,2	1°	325	940	10000
23010-2018	18	6	0,001	0,2	0,3	0,2	1°	98	435	10000
23010-2020	20	12	0,0032	0,23	0,3	0,2	1°	435	508	9500
23010-2022	22	6	0,0024	0,9	0,3	0,2	1°	136	450	9500
23010-2025	25	16	0,00784	1,45	0,3	0,2	1°	285	927	8000
23010-2030	30	25	0,022	2,47	0,4	0,3	1°	400	903	6000
23010-2040	40	36	0,09	5,82	0,4	0,3	1°	660	1229	5000
23010-2050	50	73	0,254	16	0,5	0,3	1°	950	1619	5000

Order No.	D1/D2 predrilled	D1/D2 min.	D1/D2 max.	D4	L	L1	L2	C (DIN 912-12.9)	Tightening torque of screws Nm
23010-2016	2,5	3	6	16	23	7	3,5	M2,5x6	1
23010-2018	2,5	3	6	18	16,6	5,5	2,75	M2,5x8	1
23010-2020	2,5	3	8	20	28	8	4	M2,5x8	1
23010-2022	2,5	3	10	22	20	5,5	2,75	M2,5x8	1
23010-2025	3,5	4	12	25	28	8	4	M3x10	2
23010-2030	5,5	6	14	30	40	11	5,5	M4x10	4
23010-2040	5,5	6	18	40	48	11	5,5	M5x14	9
23010-2050	9,5	10	26	50	65	19	9,5	M6x16	14

Beam couplings

with removable clamping hub, aluminium

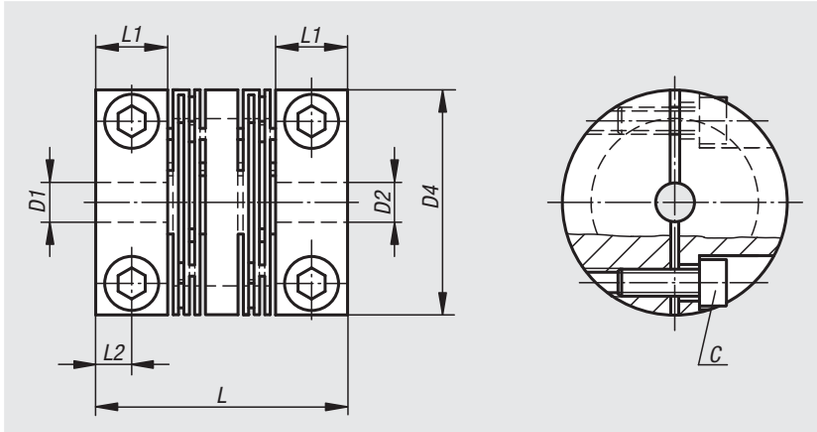

Material:
Aluminium.

Version:
Bright.

Note for ordering:
D1 and D2 are customer specific
e.g. 23012-1025; D1 = 5^{H7}, D2 = 8^{H7}

Note:
Zero backlash, torsionally rigid, resiliently flexible and maintenance-free full metal coupling for transmitting angle synchronous rotary movement. The innovative slit structure makes possible a very good axial, radial and angular flexibility with low reset force. Ideal for servomotors.

Temperature range:
-50 °C to +150 °C.

Assembly:
Recommended shaft tolerances h7.

Order No.	Size	Nominal torque Nm	Moment of inertia (10^{-3} kgm^2)	Max. axial shaft displacement ±	Max. lateral shaft displacement	Torsion resistance Nm/arcmin	Max. angular shaft displacement	Axial spring stiffness N/mm	Lateral spring stiffness N/mm	max. speed rpm
23012-1025	25	7	0,0043	0,3	0,2	1,02	1°	140	437	8000
23012-1030	30	10	0,011	0,4	0,3	1,45	1°	170	363	6000
23012-1040	40	19	0,035	0,4	0,3	3,35	1°	270	379	5000
23012-1050	50	35	0,114	0,5	0,3	10,18	1°	410	853	5000

Order No.	D1/D2 predrilled	D1/D2 min.	D1/D2 max.	D4	L	L1	L2	C (DIN 912-12.9)	Tightening torque of screws Nm
23012-1025	customer specific	4	12	25	28	8	4	M3x10	2
23012-1030	customer specific	6	14	30	40	11	5,5	M4x10	4
23012-1040	customer specific	6	18	40	48	11	5,5	M5x14	9
23012-1050	customer specific	10	26	50	65	19	9,5	M6x16	14

Beam couplings

with removable clamping hub, stainless steel

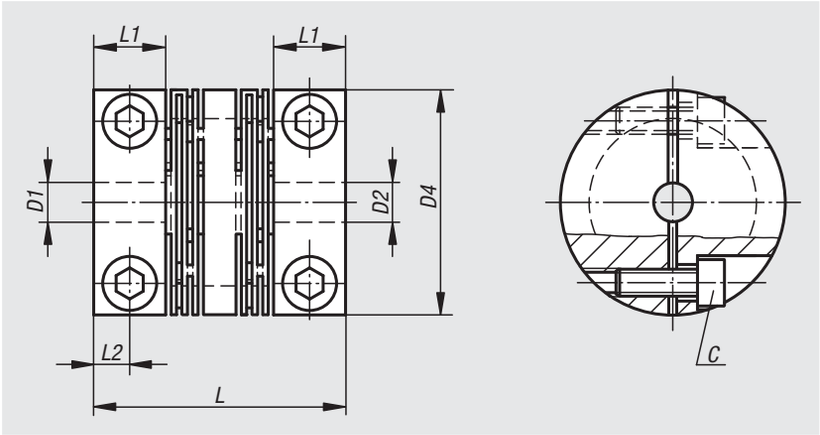

Material:
Stainless steel 1.4305.

Version:
Bright.

Note for ordering:
D1 and D2 are customer specific
e.g. 23012-2025; D1 = 5^{H7}, D2 = 8^{H7}

Note:
Zero backlash, torsionally rigid, resiliently flexible and maintenance-free full metal coupling for transmitting angle synchronous rotary movement. The innovative slit structure makes possible a very good axial, radial and angular flexibility with low reset force. Ideal for servomotors.

Temperature range:
-50 °C to +150 °C.

Assembly:
Recommended shaft tolerances h7.

Order No.	Size	Nominal torque Nm	Moment of inertia (10^{-3} kgm^2)	Torsion resistance Nm/arcmin	Max. axial shaft displacement ±	Max. lateral shaft displacement	Max. angular shaft displacement	Axial spring stiffness N/mm	Lateral spring stiffness N/mm	max. speed rpm
23012-2025	25	16	0,00784	1,45	0,3	0,2	1°	285	927	8000
23012-2030	30	25	0,022	2,47	0,4	0,3	1°	400	903	6000
23012-2040	40	36	0,09	5,82	0,4	0,3	1°	660	1229	5000
23012-2050	50	73	0,254	16	0,5	0,3	1°	950	1619	5000

Order No.	D1/D2 predrilled	D1/D2 min.	D1/D2 max.	D4	L	L1	L2	C (DIN 912-12.9)	Tightening torque of screws Nm
23012-2025	customer specific	6	12	25	28	8	4	M3x10	2
23012-2030	customer specific	6	14	30	40	11	5,5	M4x10	4
23012-2040	customer specific	6	18	40	48	11	5,5	M5x14	9
23012-2050	customer specific	10	26	50	65	19	9,5	M6x16	14

Elastomer dog couplings

with conical hub and clamping ring (similar to DIN 69002)

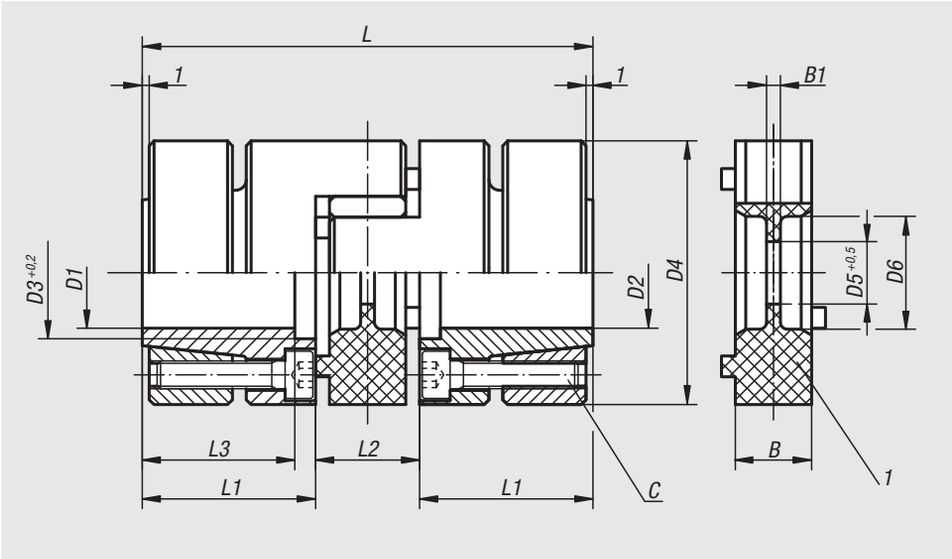

Material:
Spider polyurethane hardness Shore 98A.
Hub aluminium.
Conical ring carbon steel.

Sample order:
nlm 23021-010,
D1 = 6
D2 = 6
(The hubs are supplied pre-bored).

Note:
This coupling series is particularly suitable for use in high speed main spindle or drill spindle drives. Before the plug-in assembly, both clamping ring hubs must be fastened to the shafts with the correct tightening torque. Lightly oil the spider to ease assembly.

Assembly:
The shaft to hub bore fit should be a transition fit. The play should be max. 0.02 mm. i.e:
shaft Ø 25 k6
bore Ø 25 G6.
Bores smaller than D1/D2 min. are possible, however an optimal transfer of the nominal torque is no longer guaranteed.

On request:
Hub bores D1 and D2 with separate tolerance class or range.

Drawing reference:
1) elastomer spider

Order No.	Size	Nominal torque Nm	Moment of inertia (10^{-3} kgm^2)	Static resistance to torsion Nm/arcmin	Max. axial shaft displacement ±	Max. lateral shaft displacement	Radial spring stiffness N/mm	Tightening torque of screws Nm	max. speed rpm
23021-010	10	10	0,015	0,04	0,5	0,1	600	1,8	30000
23021-017	17	17	0,05	0,24	0,5	0,1	2100	4	24000
23021-043	43	43	0,19	0,4	0,5	0,1	2500	8	19000
23021-060	60	60	0,28	0,6	0,5	0,1	2600	8	17500
23021-150	150	150	0,65	1,05	1	0,1	3300	8	15000
23021-320	320	320	2	2	1	0,12	4500	35	12000
23021-500	500	500	5,6	5,8	1	0,15	5900	67	9500
23021-700	700	700	13	8	1	0,15	7000	115	8000

Order No.	D1/D2 predrilled	D1/D2 min.	D1/D2 max.	D3	D4	D5	D6	L	L1	L2	L3	B	B1	C (DIN 912-12.9)
23021-010	6	6	14	17	32	8,5	10,5	50	18,5	13	15,5	10	2	4x M3
23021-017	9	9	19	22	40	9,5	18	66	25	16	21	12	3	6x M4
23021-043	10	12	24	29	50	12,5	27	78	30	18	25	14	3	4x M5
23021-060	12	12	26	30	55	12,5	27	78	30	18	25	14	3	4x M5
23021-150	12	17	36	40	65	14,5	30	90	35	20	30	15	4	8x M5
23021-320	18	20	40	46	80	16,5	38	114	45	24	40	18	4	4x M8
23021-500	20	22	48	58	100	20,5	47	138	55	28	49	22	5	4x M10
23021-700	24	25	60	72	120	22,5	58	155	61	33	54	25	6	4x M12

Elastomer dog couplings

with radial clamping hub

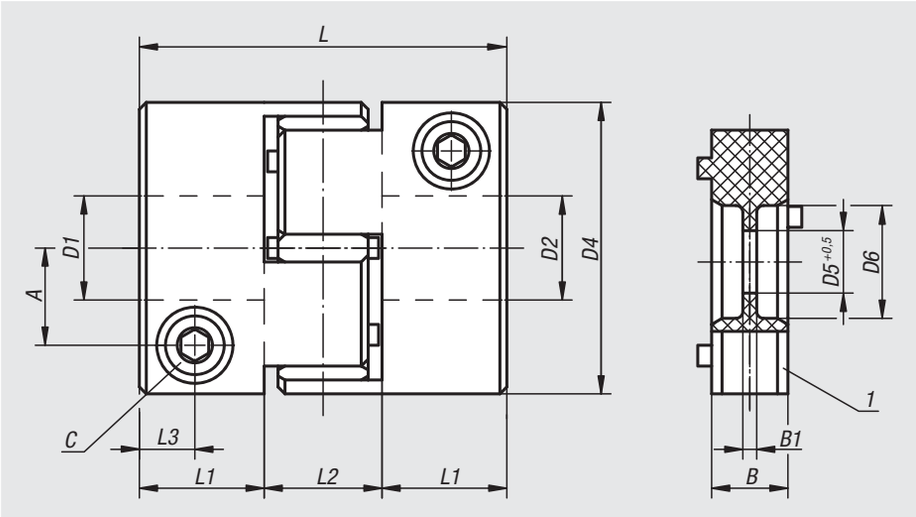

Material:
Spider polyurethane hardness Shore 98A.
Hub aluminium.

Version:
Bright.

Sample order:
nlm 23022-008,
D1 = 6
D2 = 6
(The hubs are supplied pre-bored).

Note:
Radial clamping of the hub for short mounting times. The couplings can be mounted completely assembled or a plug-in assembly is also possible. Lightly oil the spider to ease assembly. Take note of the require tightening torque for the clamping screw.

Assembly:
The shaft to hub bore fit is a transition fit. The play should be min. 0.01 mm and max. 0.04 mm i.e.
shaft: Ø 28 k6
hub: Ø 28 F6
Bores smaller than D1/D2 min. are possible, however an optimal transfer of the couplings nominal torque is no longer guaranteed.

On request:
Hub bores D1 and D2 with separate tolerance class or range.

Drawing reference:
1) elastomer spider

Order No.	Size	Nominal torque Nm	Moment of inertia (10^{-3} kgm^2)	Static resistance to torsion Nm/arcmin	Max. axial shaft displacement ±	Max. lateral shaft displacement	Radial spring stiffness N/mm	Tightening torque of screws Nm
23022-002	2	2	0,00016	0,007	0,6	0,1	405	0,5
23022-005	5	5	0,0011	0,016	0,8	0,1	510	1
23022-008	8	8	0,01	0,04	0,5	0,1	600	4
23022-015	15	15	0,03	0,24	0,5	0,1	2100	8
23022-030	30	30	0,09	0,41	0,5	0,1	2500	14
23022-060	60	60	0,18	0,61	0,5	0,1	2600	35
23022-150	150	150	0,38	1,05	1	0,1	3300	67
23022-300	300	300	1	2	1	0,12	4500	115
23022-500	500	500	2,2	5,8	1	0,15	5900	115
23022-700	700	700	5,2	8	1	0,15	7000	185

Order No.	D1/D2 predrilled	D1/D2 min.	D1/D2 max.	D4	D5	D6	A	L	L1	L2	L3	B	B1	C DIN 912-10.9
23022-002	3	3	5	14	-	-	4	22	7	8	3,5	6	-	M2
23022-005	5	5	8	20	-	-	6,5	30	10	10	5	8	-	M2,5
23022-008	6	8	15	32	8,5	10,5	10,5	40	13,5	13	6	10	2	M4
23022-015	7	10	20	40	9,5	18	13,5	50	17	16	8	12	3	M5
23022-030	9	13	26	50	12,5	27	16,5	58	20	18	9	14	3	M6
23022-060	12	15	29	60	12,5	27	19,5	62	22	18	10	14	3	M8
23022-150	15	22	33	70	14,5	30	23	73	26,5	20	12	15	4	M10
23022-300	18	30	42	85	16,5	38	29	86	31	24	14	18	4	M12
23022-500	20	38	56	100	20,5	47	36	94	33	28	16	22	5	M12
23022-700	24	40	70	120	22,5	58	44	109	38	33	18	25	6	M14

Elastomer dog couplings

clamping with grub screw

miniature

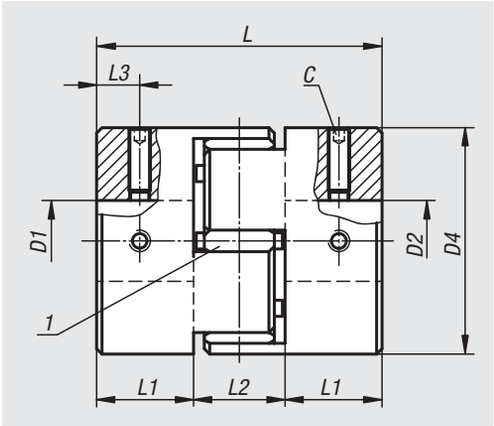

Material:
Spider polyurethane hardness Shore 98A.
Hub aluminium.

Version:
Bright.

Sample order:
nlm 23023-0020,
D1 = 3
D2 = 3
(The hubs are supplied pre-bored).

Note:
Clamping the hub with a grub screw is a cost-effective alternative to the elastomer dog couplings with radial clamping hub (23022). Short mounting times.
The couplings can be mounted completely assembled or plug-in mounting is also possible. Lightly oil the spider to ease assembly.
Take note of the required tightening torque for the grub screw. To ease removal we recommend milling a flat on the shaft.

Assembly:
The shaft to hub bore fit is a transition fit. The play should be min. 0.01 mm and max. 0.04 mm i.e.
shaft: Ø 6 f7
hub: Ø 6 H8.
Bores smaller than D1/D2 min. are possible, however an optimal transfer of the couplings nominal torque is no longer guaranteed.

On request:
Hub bores D1 and D2 with separate tolerance class or range.

Drawing reference:
1) elastomer spider

Order No.	Size	Nominal torque Nm	Moment of inertia (10^{-3} kgm^2)	Static resistance to torsion Nm/arcmin	Max. axial shaft displacement ±	Max. lateral shaft displacement	Tightening torque of screws Nm
23023-0020	2	2	0,00021	0,007	0,6	0,1	0,7
23023-0050	5	5	0,001	0,016	0,8	0,1	0,7
23023-0125	12,5	12,5	0,0059	0,038	1	0,1	1,7

Order No.	D1/D2 predrilled	D1/D2 min.	D1/D2 max.	D4	L	L1	L2	L3	C (DIN 916)
23023-0020	3	3	6	14	22	7	8	3,5	M3
23023-0050	5	5	9,53	20	30	10	10	5	M3
23023-0125	8	8	14	30	35	11	13	5,5	M4

Oldham-type couplings

miniature

with radial clamping hub

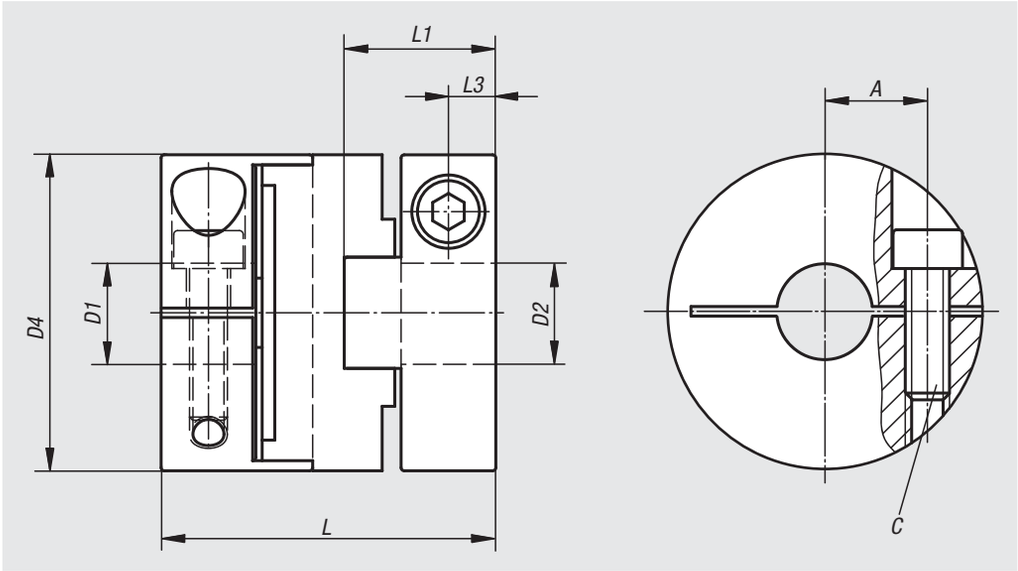

Material:
Centre disc polyacetal.
Hub aluminium.

Sample order:
nlm 23030-0016,
D1 = 3
D2 = 3
(The hubs are supplied pre-bored).

Note:
Short mounting times with radial clamping hub. The couplings can be mounted completely assembled or a plug-in assembly is also possible. Take note of the required tightening torque for the of the clamping screw.

Assembly:
The shaft to hub hole fit is a transition fit. The play should be min. 0.01 mm and max. 0.04 mm i.e.
shaft: Ø 6 f7
hub: Ø 6 H8.

Advantages:
- robust
- plug-in
- play-free
- short design

On request:
Hub bores D1 and D2 with separate tolerance class or range.

Order No.	Size	Nominal torque Nm	Moment of inertia (10^{-6} kgm^2)	Static resistance to torsion Nm/arcmin	Max. angular shaft displacement	Max. lateral shaft displacement	max. speed rpm	Tightening torque of screws Nm
23030-0016	16	1	0,0032	0,019	2°	1	8000	1
23030-0020	20	1,5	0,0082	0,035	2°	1,5	7000	1
23030-0025	25	2,5	0,026	0,058	2°	2	6000	1,5
23030-0032	32	7	0,083	0,18	2°	2,5	4800	2,5

Order No.	D1/D2 predrilled	D1/D2 min.	D1/D2 max.	D4	A	L	L1	L3	C DIN 912-10.9
23030-0016	3	3	6	16	5	21	9,5	3	M2,6
23030-0020	5	5	8	20	6,5	22,5	10	3	M2,6
23030-0025	6,35	6,35	10	25	8	27	12	4	M3
23030-0032	8	8	14	32	11	35	16	5	M4

norelem

Oldham-type couplings

miniature

clamping with grub screw

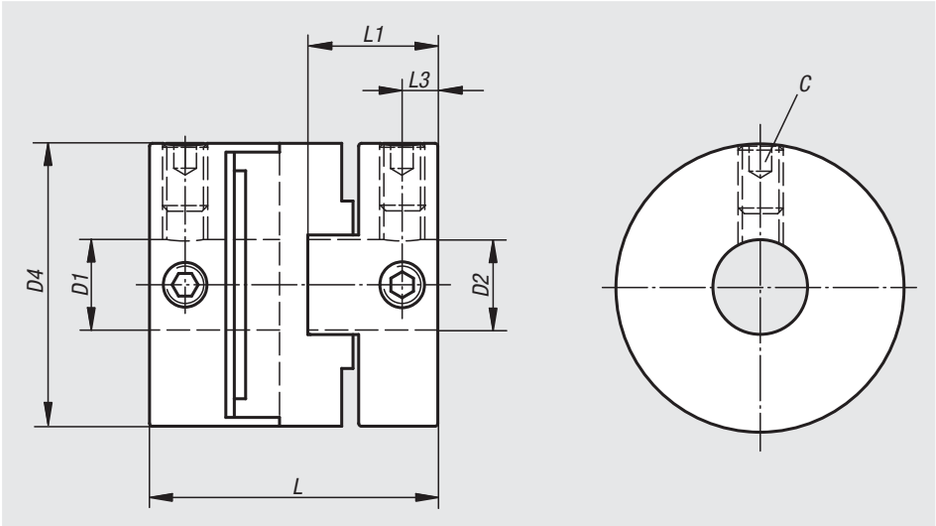

Material:
Centre disc polyacetal.
Hub aluminium.

Sample order:
nlm 23032-0016,
D1 = 4
D2 = 4
(The hubs are supplied pre-bored).

Note:
Clamping the hub with a grub screw is a cost-effective alternative to the Oldham-type couplings with radial clamping hub (23030). Short mounting times.
The couplings can be mounted completely assembled or a plug-in assembly is also possible.
Take note of the tightening torque for the grub screw.
To ease removal we recommend milling a flat on the shaft.

Assembly:
The shaft to hub hole fit is a transition fit. The play should be min. 0.01 mm and max. 0.04 mm i.e.
shaft: Ø 6 f7
hub: Ø 6 H8.

Advantages:
- robust
- plug-in
- play-free
- short design

On request:
Hub bores D1 and D2 with separate tolerance class or range.

Order No.	Size	Nominal torque Nm	Moment of inertia (10^{-3} kgm^2)	Static resistance to torsion Nm/arcmin	Max. angular shaft displacement	Max. lateral shaft displacement	max. speed rpm	Tightening torque of screws Nm
23032-0016	16	1	0,0024	0,019	2°	1	8000	1
23032-0020	20	1,5	0,081	0,035	2°	1,5	7000	1,7
23032-0025	25	2,5	0,018	0,058	2°	2	6000	1,7
23032-0032	32	7	0,067	0,18	2°	2,5	4800	4

Order No.	D1/D2 predrilled	D1/D2 min.	D1/D2 max.	D4	L	L1	L3	C (DIN 916)
23032-0016	4	4	6,35	16	18	8	2,3	M3
23032-0020	4	4	8	20	20	9	2,5	M4
23032-0025	5	5	10	25	25,5	11,5	3	M4
23032-0032	8	8	14	32	32	14,5	4	M5

Rigid couplings

one-piece

Material:
Steel 1.0718.
Stainless steel 1.4305.

Version:
Bright.

Sample order:
nlm 23050-1100

Note:
Rigid couplings transmit high torques without rotational play. They are used where there are no shaft displacements or alignment errors. Wear-free and maintenance-free. Screws secured to avoid vibration induced loosening.

The maximum torque transmission can only be achieved through optimal installation and correct shaft dimensions.

Maximum speed 4000 rpm.

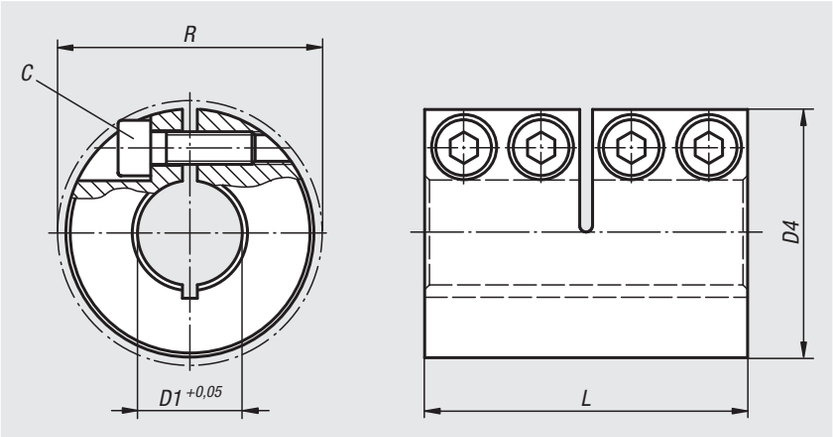

Temperature range:
-40 °C to +175 °C.

On request:
Other dimensions.

One-piece rigid couplings, steel

Order No.	Main material	C (DIN 912-12.9)	Tightening torque of screws Nm	D1	D4	L	R	Nominal torque Nm
23050-1080	steel	M3x8	2,1	8	24	35	26,8	50
23050-1100	steel	M4x12	4,6	10	29	45	32,7	70
23050-1120	steel	M4x12	4,6	12	29	45	32,7	70
23050-1140	steel	M5x16	9,5	14	34	50	39,4	190
23050-1150	steel	M5x16	9,5	15	34	50	39,4	190
23050-1160	steel	M5x16	9,5	16	34	50	39,4	190
23050-1190	steel	M6x18	16	19	42	65	48,2	300
23050-1200	steel	M6x18	16	20	42	65	48,2	350
23050-1350	steel	M8x25	39	35	67	95	74,1	1100
23050-1250	steel	M6x18	16	25	45	75	50,8	390
23050-1300	steel	M6x18	16	30	54	83	58,6	475
23050-1400	steel	M8x25	39	40	77	108	83,4	1325
23050-1500	steel	M10x25	77	50	85	124	93,2	2250

One-piece rigid couplings, stainless steel

Order No.	Main material	C (DIN 912 A2-70)	Tightening torque of screws Nm	D1	D4	L	R	Nominal torque Nm
23050-2080	stainless steel	M3x8	1,1	8	24	35	26,8	16
23050-2100	stainless steel	M4x12	2,5	10	29	45	32,7	70
23050-2120	stainless steel	M4x12	2,5	12	29	45	32,7	70
23050-2140	stainless steel	M5x16	5,4	14	34	50	39,4	160
23050-2150	stainless steel	M5x16	5,4	15	34	50	39,4	160
23050-2160	stainless steel	M5x16	5,4	16	34	50	39,4	160
23050-2190	stainless steel	M6x18	9,6	19	42	65	48,2	260
23050-2200	stainless steel	M6x18	9,6	20	42	65	48,2	300
23050-2250	stainless steel	M6x18	9,6	25	45	75	50,8	325
23050-2300	stainless steel	M6x18	9,6	30	54	83	58,6	400
23050-2350	stainless steel	M8x25	23	35	67	95	74,1	330
23050-2400	stainless steel	M8x25	23	40	77	108	83,4	400
23050-2500	stainless steel	M10x25	46	50	85	124	93,2	688

Rigid couplings

two-piece

Material:
Steel 1.0718.
Stainless steel 1.4305.

Version:
Bright.

Sample order:
nlm 23052-1100

Note:
Rigid couplings transmit high torques without rotational play. They are used where there are no shaft displacements or alignment errors. Wear-free and maintenance-free. Screws secured to avoid vibration induced loosening.

The maximum torque transmission can only be achieved through optimal installation and correct shaft dimensions.

Maximum speed 4000 rpm.

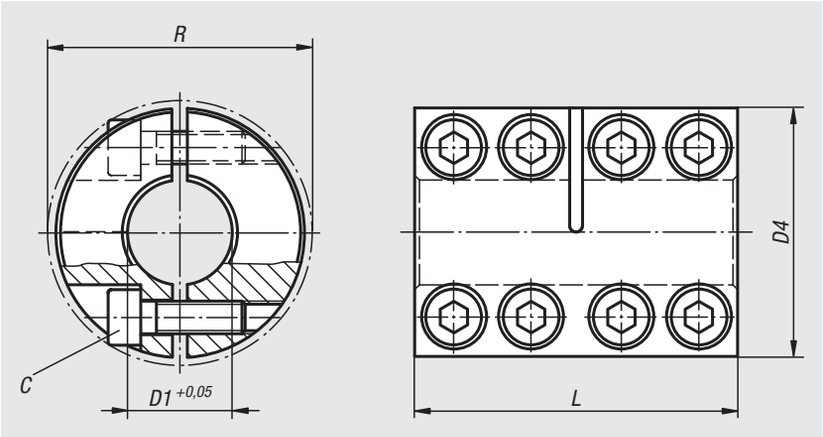

Temperature range:
-40 °C to +175 °C.

On request:
Other dimensions.
Version with DIN 6885/1 parallel keyway, tolerance P9.

Two-piece rigid couplings, steel

Order No.	Main material	C (DIN 912-12.9)	Tightening torque of screws Nm	D1	D4	L	R	Nominal torque Nm
23052-1080	steel	M3x8	2,1	8	24	35	26,8	50
23052-1100	steel	M4x12	4,6	10	29	45	32,7	70
23052-1120	steel	M4x12	4,6	12	29	45	32,7	70
23052-1140	steel	M5x16	9,5	14	34	50	39,4	190
23052-1150	steel	M5x16	9,5	15	34	50	39,4	190
23052-1160	steel	M5x16	9,5	16	34	50	39,4	190
23052-1190	steel	M6x18	16	19	42	65	48,2	300
23052-1200	steel	M6x18	16	20	42	65	48,2	350
23052-1250	steel	M6x18	16	25	45	75	50,8	390
23052-1300	steel	M6x18	16	30	54	83	58,6	475
23052-1350	steel	M8x25	39	35	67	95	74,1	1100
23052-1400	steel	M8x25	39	40	77	108	83,4	1325
23052-1500	steel	M10x25	77	50	85	124	93,2	2250

Two-piece rigid couplings, stainless steel

Order No.	Main material	C (DIN 912 A2-70)	Tightening torque of screws Nm	D1	D4	L	R	Nominal torque Nm
23052-2080	stainless steel	M3x8	1,1	8	24	35	26,8	16
23052-2100	stainless steel	M4x12	2,5	10	29	45	32,7	70
23052-2120	stainless steel	M4x12	2,5	12	29	45	32,7	70
23052-2140	stainless steel	M5x16	5,4	14	34	50	39,4	160
23052-2150	stainless steel	M5x16	5,4	15	34	50	39,4	160
23052-2160	stainless steel	M5x16	5,4	16	34	50	39,4	160
23052-2190	stainless steel	M6x18	9,6	19	42	65	48,2	260
23052-2200	stainless steel	M6x18	9,6	20	42	65	48,2	300
23052-2250	stainless steel	M6x18	9,6	25	45	75	50,8	325
23052-2300	stainless steel	M6x18	9,6	30	54	83	58,6	400
23052-2350	stainless steel	M8x25	23	35	67	95	74,1	438
23052-2400	stainless steel	M8x25	23	40	77	108	83,4	445
23052-2500	stainless steel	M10x25	46	50	85	124	93,2	688

Taper clamping bushes

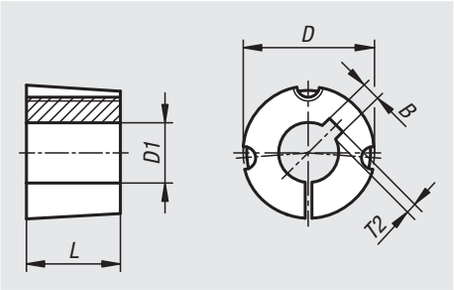

Material:
Grey cast iron or steel.

Version:
Phosphated

Sample order:
nlm 23200-0351122

Note:
The taper clamping bushes enable easy and rapid mounting and removal of pulleys. The wide range of bore sizes available enable immediate mounting without any time-consuming and costly internal or external machining. The bushes have DIN 6885/1 keyways in addition to the locking screws. These taper clamping bushes are interchangeable with all other similar commercial types.

Assembly:
Installation must be carried out according to the enclosed user information.

Accessories:
Supplied complete with screws.

Order No.	Version	Main material	L	B	D	D1	T2	for screw	Tightening torque of clamping screws (Nm)
23200-0351122	type 1008	grey cast iron	22,3	4	35	11	1,8	1/4 BSW	5,5
23200-0351222	type 1008	grey cast iron	22,3	4	35	12	1,8	1/4 BSW	5,5
23200-0351422	type 1008	grey cast iron	22,3	5	35	14	2,3	1/4 BSW	5,5
23200-0351522	type 1008	grey cast iron	22,3	5	35	15	2,3	1/4 BSW	5,5
23200-0351622	type 1008	grey cast iron	22,3	5	35	16	2,3	1/4 BSW	5,5
23200-0351822	type 1008	grey cast iron	22,3	6	35	18	2,8	1/4 BSW	5,5
23200-0351922	type 1008	grey cast iron	22,3	6	35	19	2,8	1/4 BSW	5,5
23200-0352022	type 1008	grey cast iron	22,3	6	35	20	2,8	1/4 BSW	5,5
23200-0352222	type 1008	grey cast iron	22,3	6	35	22	2,8	1/4 BSW	5,5

Order No.	Version	Main material	L	B	D	D1	T2	for screw	Tightening torque of clamping screws (Nm)
23200-0381122	type 1108	grey cast iron	22,3	4	38	11	1,8	1/4 BSW	5,5
23200-0381222	type 1108	grey cast iron	22,3	4	38	12	1,8	1/4 BSW	5,5
23200-0381422	type 1108	grey cast iron	22,3	5	38	14	2,3	1/4 BSW	5,5
23200-0381522	type 1108	grey cast iron	22,3	5	38	15	2,3	1/4 BSW	5,5
23200-0381622	type 1108	grey cast iron	22,3	5	38	16	2,3	1/4 BSW	5,5
23200-0381722	type 1108	grey cast iron	22,3	5	38	17	2,3	1/4 BSW	5,5
23200-0381822	type 1108	grey cast iron	22,3	6	38	18	2,8	1/4 BSW	5,5
23200-0381922	type 1108	grey cast iron	22,3	6	38	19	2,8	1/4 BSW	5,5
23200-0382022	type 1108	grey cast iron	22,3	6	38	20	2,8	1/4 BSW	5,5
23200-0382222	type 1108	grey cast iron	22,3	6	38	22	2,8	1/4 BSW	5,5
23200-0382422	type 1108	grey cast iron	22,3	8	38	24	2,3	1/4 BSW	5,5
23200-0382522	type 1108	grey cast iron	22,3	8	38	25	2,3	1/4 BSW	5,5
23200-0382622	type 1108	grey cast iron	22,3	8	38	26	2,3	1/4 BSW	5,5

Taper clamping bushes

Order No.	Version	Main material	L	B	D	D1	T2	for screw	Tightening torque of clamping screws (Nm)
23200-0471125	type 1210	grey cast iron	25,4	4	47	11	1,8	3/8 BSW	20
23200-0471225	type 1210	grey cast iron	25,4	4	47	12	1,8	3/8 BSW	20
23200-0471425	type 1210	grey cast iron	25,4	5	47	14	2,3	3/8 BSW	20
23200-0471525	type 1210	grey cast iron	25,4	5	47	15	2,3	3/8 BSW	20
23200-0471625	type 1210	grey cast iron	25,4	5	47	16	2,3	3/8 BSW	20
23200-0471825	type 1210	grey cast iron	25,4	6	47	18	2,8	3/8 BSW	20
23200-0471925	type 1210	grey cast iron	25,4	6	47	19	2,8	3/8 BSW	20
23200-0472025	type 1210	grey cast iron	25,4	6	47	20	2,8	3/8 BSW	20
23200-0472225	type 1210	grey cast iron	25,4	6	47	22	2,8	3/8 BSW	20
23200-0472425	type 1210	grey cast iron	25,4	8	47	24	3,3	3/8 BSW	20
23200-0472525	type 1210	grey cast iron	25,4	8	47	25	3,3	3/8 BSW	20
23200-0472625	type 1210	grey cast iron	25,4	8	47	26	3,3	3/8 BSW	20
23200-0472825	type 1210	grey cast iron	25,4	8	47	28	3,3	3/8 BSW	20
23200-0473025	type 1210	steel	25,4	8	47	30	3,3	3/8 BSW	20
23200-0473225	type 1210	steel	25,4	10	47	32	2,3	3/8 BSW	20

Order No.	Version	Main material	L	B	D	D1	T2	for screw	Tightening torque of clamping screws (Nm)
23200-0571225	type 1610	grey cast iron	25,4	4	57	12	1,8	3/8 BSW	20
23200-0571425	type 1610	grey cast iron	25,4	5	57	14	2,3	3/8 BSW	20
23200-0571525	type 1610	grey cast iron	25,4	5	57	15	2,3	3/8 BSW	20
23200-0571625	type 1610	grey cast iron	25,4	5	57	16	2,3	3/8 BSW	20
23200-0571825	type 1610	grey cast iron	25,4	6	57	18	2,8	3/8 BSW	20
23200-0571925	type 1610	grey cast iron	25,4	6	57	19	2,8	3/8 BSW	20
23200-0572025	type 1610	grey cast iron	25,4	6	57	20	2,8	3/8 BSW	20
23200-0572225	type 1610	grey cast iron	25,4	6	57	22	2,8	3/8 BSW	20
23200-0572425	type 1610	grey cast iron	25,4	8	57	24	3,3	3/8 BSW	20
23200-0572525	type 1610	grey cast iron	25,4	8	57	25	3,3	3/8 BSW	20
23200-0572625	type 1610	grey cast iron	25,4	8	57	26	3,3	3/8 BSW	20
23200-0572825	type 1610	grey cast iron	25,4	8	57	28	3,3	3/8 BSW	20
23200-0573025	type 1610	grey cast iron	25,4	8	57	30	3,3	3/8 BSW	20
23200-0573225	type 1610	grey cast iron	25,4	10	57	32	3,3	3/8 BSW	20
23200-0573525	type 1610	grey cast iron	25,4	10	57	35	3,3	3/8 BSW	20
23200-0573825	type 1610	grey cast iron	25,4	10	57	38	3,3	3/8 BSW	20
23200-0574025	type 1610	steel	25,4	12	57	40	2,3	3/8 BSW	20
23200-0574225	type 1610	steel	25,4	12	57	42	2,3	3/8 BSW	20

Taper clamping bushes

Order No.	Version	Main material	L	B	D	D1	T2	for screw	Tightening torque of clamping screws (Nm)
23200-0571238	type 1615	grey cast iron	38,1	4	57	12	1,8	3/8 BSW	20
23200-0571438	type 1615	grey cast iron	38,1	5	57	14	2,3	3/8 BSW	20
23200-0571538	type 1615	grey cast iron	38,1	5	57	15	2,3	3/8 BSW	20
23200-0571638	type 1615	grey cast iron	38,1	5	57	16	2,3	3/8 BSW	20
23200-0571838	type 1615	grey cast iron	38,1	6	57	18	2,8	3/8 BSW	20
23200-0571938	type 1615	grey cast iron	38,1	6	57	19	2,8	3/8 BSW	20
23200-0572038	type 1615	grey cast iron	38,1	6	57	20	2,8	3/8 BSW	20
23200-0572238	type 1615	grey cast iron	38,1	6	57	22	2,8	3/8 BSW	20
23200-0572438	type 1615	grey cast iron	38,1	8	57	24	3,3	3/8 BSW	20
23200-0572538	type 1615	grey cast iron	38,1	8	57	25	3,3	3/8 BSW	20
23200-0572638	type 1615	grey cast iron	38,1	8	57	26	3,3	3/8 BSW	20
23200-0572838	type 1615	grey cast iron	38,1	8	57	28	3,3	3/8 BSW	20
23200-0573038	type 1615	grey cast iron	38,1	8	57	30	3,3	3/8 BSW	20
23200-0573238	type 1615	grey cast iron	38,1	10	57	32	3,3	3/8 BSW	20
23200-0573538	type 1615	grey cast iron	38,1	10	57	35	3,3	3/8 BSW	20
23200-0573838	type 1615	grey cast iron	38,1	10	57	38	3,3	3/8 BSW	20
23200-0574038	type 1615	steel	38,1	12	57	40	2,3	3/8 BSW	20

Order No.	Version	Main material	L	B	D	D1	T2	for screw	Tightening torque of clamping screws (Nm)
23200-0701431	type 2012	grey cast iron	31,8	5	70	14	2,3	7/16 BSW	30
23200-0701631	type 2012	grey cast iron	31,8	5	70	16	2,3	7/16 BSW	30
23200-0701831	type 2012	grey cast iron	31,8	6	70	18	2,8	7/16 BSW	30
23200-0701931	type 2012	grey cast iron	31,8	6	70	19	2,8	7/16 BSW	30
23200-0702031	type 2012	grey cast iron	31,8	6	70	20	2,8	7/16 BSW	30
23200-0702231	type 2012	grey cast iron	31,8	6	70	22	2,8	7/16 BSW	30
23200-0702431	type 2012	grey cast iron	31,8	8	70	24	3,3	7/16 BSW	30
23200-0702531	type 2012	grey cast iron	31,8	8	70	25	3,3	7/16 BSW	30
23200-0702631	type 2012	grey cast iron	31,8	8	70	26	3,3	7/16 BSW	30
23200-0702831	type 2012	grey cast iron	31,8	8	70	28	3,3	7/16 BSW	30
23200-0703031	type 2012	grey cast iron	31,8	8	70	30	3,3	7/16 BSW	30
23200-0703231	type 2012	grey cast iron	31,8	10	70	32	3,3	7/16 BSW	30
23200-0703531	type 2012	grey cast iron	31,8	10	70	35	3,3	7/16 BSW	30
23200-0703831	type 2012	grey cast iron	31,8	10	70	38	3,3	7/16 BSW	30
23200-0704031	type 2012	grey cast iron	31,8	12	70	40	3,3	7/16 BSW	30
23200-0704231	type 2012	grey cast iron	31,8	12	70	42	3,3	7/16 BSW	30
23200-0704531	type 2012	grey cast iron	31,8	14	70	45	3,8	7/16 BSW	30
23200-0704831	type 2012	grey cast iron	31,8	14	70	48	3,8	7/16 BSW	30
23200-0705031	type 2012	steel	31,8	14	70	50	3,8	7/16 BSW	30

Taper clamping bushes

Order No.	Version	Main material	L	B	D	D1	T2	for screw	Tightening torque of clamping screws (Nm)
23200-0851844	type 2517	grey cast iron	44,5	6	85	18	2,8	1/2 BSW	50
23200-0851944	type 2517	grey cast iron	44,5	6	85	19	2,8	1/2 BSW	50
23200-0852044	type 2517	grey cast iron	44,5	6	85	20	2,8	1/2 BSW	50
23200-0852244	type 2517	grey cast iron	44,5	6	85	22	2,8	1/2 BSW	50
23200-0852444	type 2517	grey cast iron	44,5	8	85	24	3,3	1/2 BSW	50
23200-0852544	type 2517	grey cast iron	44,5	8	85	25	3,3	1/2 BSW	50
23200-0852844	type 2517	grey cast iron	44,5	8	85	28	3,3	1/2 BSW	50
23200-0853044	type 2517	grey cast iron	44,5	8	85	30	3,3	1/2 BSW	50
23200-0853244	type 2517	grey cast iron	44,5	10	85	32	3,3	1/2 BSW	50
23200-0853544	type 2517	grey cast iron	44,5	10	85	35	3,3	1/2 BSW	50
23200-0853844	type 2517	grey cast iron	44,5	10	85	38	3,3	1/2 BSW	50
23200-0854044	type 2517	grey cast iron	44,5	12	85	40	3,3	1/2 BSW	50
23200-0854244	type 2517	grey cast iron	44,5	12	85	42	3,3	1/2 BSW	50
23200-0854544	type 2517	grey cast iron	44,5	14	85	45	3,8	1/2 BSW	50
23200-0854844	type 2517	grey cast iron	44,5	14	85	48	3,8	1/2 BSW	50
23200-0855044	type 2517	grey cast iron	44,5	14	85	50	3,8	1/2 BSW	50
23200-0855544	type 2517	grey cast iron	44,5	16	85	55	4,3	1/2 BSW	50
23200-0856044	type 2517	grey cast iron	44,5	18	85	60	4,4	1/2 BSW	50

Order No.	Version	Main material	L	B	D	D1	T2	for screw	Tightening torque of clamping screws (Nm)
23200-1082250	type 3020	grey cast iron	50,8	6	108	22	2,8	5/8 BSW	90
23200-1082550	type 3020	grey cast iron	50,8	8	108	25	3,3	5/8 BSW	90
23200-1082850	type 3020	grey cast iron	50,8	8	108	28	3,3	5/8 BSW	90
23200-1083050	type 3020	grey cast iron	50,8	8	108	30	3,3	5/8 BSW	90
23200-1083250	type 3020	grey cast iron	50,8	10	108	32	3,3	5/8 BSW	90
23200-1083550	type 3020	grey cast iron	50,8	10	108	35	3,3	5/8 BSW	90
23200-1083850	type 3020	grey cast iron	50,8	10	108	38	3,3	5/8 BSW	90
23200-1084050	type 3020	grey cast iron	50,8	12	108	40	3,3	5/8 BSW	90
23200-1084250	type 3020	grey cast iron	50,8	12	108	42	3,3	5/8 BSW	90
23200-1084550	type 3020	grey cast iron	50,8	14	108	45	3,8	5/8 BSW	90
23200-1084850	type 3020	grey cast iron	50,8	14	108	48	3,8	5/8 BSW	90
23200-1085050	type 3020	grey cast iron	50,8	14	108	50	3,8	5/8 BSW	90
23200-1085550	type 3020	grey cast iron	50,8	16	108	55	4,3	5/8 BSW	90
23200-1086050	type 3020	grey cast iron	50,8	18	108	60	4,4	5/8 BSW	90
23200-1086550	type 3020	grey cast iron	50,8	18	108	65	4,4	5/8 BSW	90
23200-1087050	type 3020	grey cast iron	50,8	20	108	70	4,9	5/8 BSW	90
23200-1087550	type 3020	steel	50,8	20	108	75	4,9	5/8 BSW	90

Notes

Overview keyless locking couplings and shrink discs

	Series		Shaft diameter from	Transmissible torque	Surface pressure on the hub	Self-centring	Axial displacement of the hub during assembly	Total height D2 / D			Overall length		
								flat	medium	high	short	medium	long
KLC's	23350		8 mm	medium	slight	Yes	No	X					X
KLC's	23351		19 mm	high	medium	Yes	Yes			X		X	
KLC's	23352		19 mm	medium	low	Yes	No			X		X	
KLC's	23354	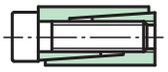	6 mm	medium	low	Yes	Yes		X		X		
KLC's	23356	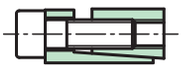	19 mm	medium	medium	Yes	Yes			X	X		
KLC's	23358		19 mm	medium	medium	Yes	No			X	X		
KLC's	23360	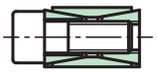	19 mm	medium	high	No	No			X	X		
KLC's	23362		25 mm	high	medium	Yes	Yes			X			X
KLC's	23368		5 mm	low	slight	Yes	Yes	X				X	
Shrink discs	23380	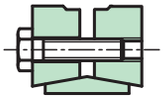	14 mm	high	-	Yes	No		X			X	
Shrink discs	23382	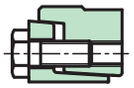	18 mm	high	-	Yes	No		X			X	

Keyless locking couplings Form A

for thin walled hubs

Material:
Steel.

Version:
Bright.

Sample order:
nlm 23350-0815

Note:
Particularly compact self-centring keyless locking coupling without axial offset.

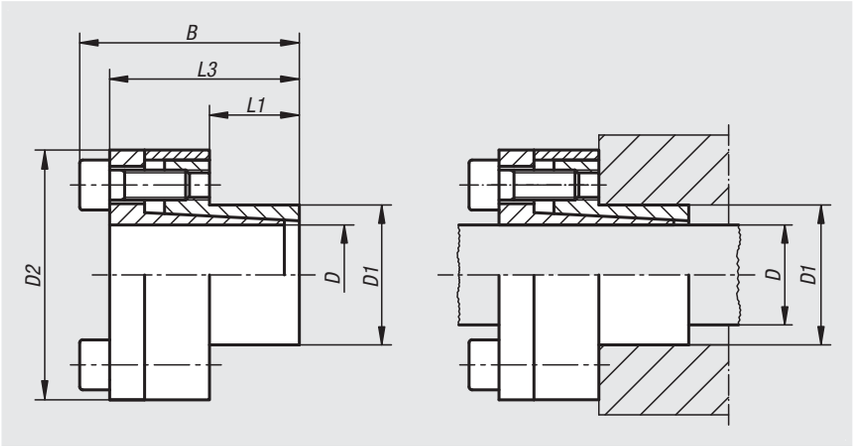

- for shaft diameters from 8 to 85 mm
- for medium torques
- suitable for hubs with low wall thickness
- no axial offset
- self-centring

Order No.	D	D1	D2	B	L1	L3	Max. torque M Nm with tightening torque MS	Max. axial force F kN with tightening torque MS
23350-0815	8	15	27	30	12	26	30	7
23350-0916	9	16	28	31	14	27	34	7
23350-1016	10	16	28	31	14	27	37	7
23350-1118	11	18	32	31	14	27	51	10
23350-1218	12	18	32	31	14	27	56	10
23350-1423	14	23	38	31	14	27	65	10
23350-1524	15	24	44	42	16	36	110	17
23350-1624	16	24	44	42	16	36	120	17
23350-1826	18	26	47	44	18	38	180	22
23350-1927	19	27	48	44	18	38	190	22
23350-2028	20	28	49	44	18	38	200	21
23350-2232	22	32	53	51	25	45	230	21
23350-2434	24	34	55	51	25	45	255	21
23350-2534	25	34	55	51	25	45	255	21
23350-2839	28	39	60	51	25	45	370	31
23350-3041	30	41	62	51	25	45	475	31
23350-3243	32	43	64	56	30	50	505	31
23350-3547	35	47	68	56	30	50	740	42
23350-3850	38	50	71	56	30	50	800	42
23350-4053	40	53	74	58	32	52	950	53
23350-4255	42	55	77	58	32	52	995	78
23350-4559	45	59	85	72	40	64	1750	78
23350-4862	48	62	87	72	40	64	1870	78
23350-5065	50	65	91	82	50	74	2430	97
23350-5571	55	71	98	82	50	74	2670	97
23350-6077	60	77	103	82	50	74	2920	97
23350-6584	65	84	110	82	50	74	3160	97
23350-7090	70	90	119	101	60	91	4330	123
23350-7595	75	95	126	101	60	91	5310	142
23350-80100	80	100	131	106	65	96	7580	190
23350-85106	85	106	137	106	65	96	7990	190

Keyless locking couplings Form A

for thin walled hubs

Assembly:
Lightly oil keyless locking coupling on the tapered faces and contact points of the shaft and hub. Do not use MoS2 or grease. Insert keyless locking coupling in the hub seat and slide onto shaft. Tighten screws crosswise in several increments to the defined tightening torque.

Dismantling: Remove all screws and screw into the extraction threads of the front flange. Tighten screws crosswise in several steps until the keyless locking coupling loosens.

Tolerances:
Shaft:
Recommended tolerance h8.
Surface quality Rz ≤ 16 µm.

Hub:
Recommended tolerance H8.
Surface quality Rz ≤ 16 µm.

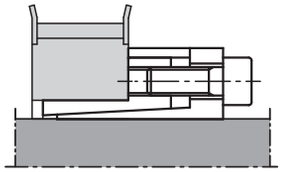

Order No.	Surface pressure on shaft P N/mm²	Surface pressure on hub P N/mm²	No. of screws	Tightening torque MS Nm
23350-0815	230	120	4 x M4	4
23350-0916	170	100	4 x M4	4
23350-1016	160	100	4 x M4	4
23350-1118	180	110	4 x M4	5
23350-1218	155	110	4 x M4	5
23350-1423	140	85	4 x M4	5
23350-1524	180	115	3 x M6	17
23350-1624	170	115	3 x M6	17
23350-1826	180	135	4 x M6	17
23350-1927	170	125	4 x M6	17
23350-2028	150	115	4 x M6	17
23350-2232	115	80	4 x M6	17
23350-2434	105	75	4 x M6	17
23350-2534	100	75	4 x M6	17
23350-2839	110	80	5 x M6	17
23350-3041	125	90	6 x M6	17
23350-3243	95	75	6 x M6	17
23350-3547	120	90	8 x M6	17
23350-3850	110	85	8 x M6	17
23350-4053	110	85	8 x M6	17
23350-4255	105	80	8 x M6	17
23350-4559	130	100	8 x M8	41
23350-4862	120	95	8 x M8	41
23350-5065	115	90	10 x M8	41
23350-5571	105	80	10 x M8	41
23350-6077	95	75	10 x M8	41
23350-6584	90	70	10 x M8	41
23350-7090	85	70	8 x M10	83
23350-7595	90	75	9 x M10	83
23350-80100	110	85	12 x M10	83
23350-85106	100	80	12 x M10	83

Keyless locking couplings Form A stainless steel

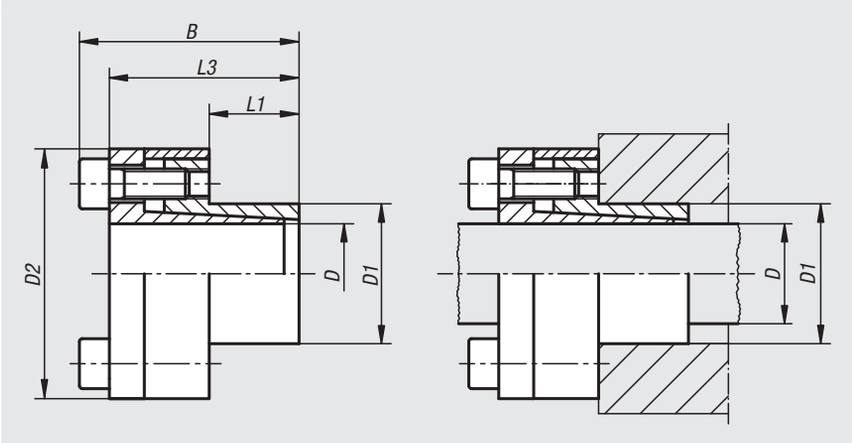

Material:
Coupling stainless steel 1.4057.
Screws stainless steel 1.4301.

Version:
Bright.

Sample order:
nlm 23350-01-2028

Note:
Particularly compact self-centring keyless locking coupling with no axial offset.

- for shaft diameters 20 - 60 mm
- for medium torques
- suitable for thin walled hubs
- no axial offset
- self-centring

Assembly:
Lightly oil keyless locking coupling on the tapered faces and contact points of the shaft and hub. Do not use MoS2 or grease. Insert keyless locking coupling in the hub seat and slide onto shaft. Tighten screws crosswise in several increments to the defined tightening torque.

Dismantling: Remove all screws and screw into the extraction threads of the front flange. Tighten screws crosswise in several steps until the keyless locking coupling loosens.

Tolerances:
Shaft:
Recommended tolerance h8.
Surface quality Rz ≤ 16 µm.

Hub:
Recommended tolerance H8.
Surface quality Rz ≤ 16 µm.

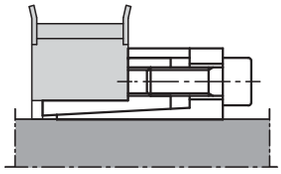

Order No.	D	D1	D2	B	L1	L3	Max. torque M Nm with tightening torque MS	Max. axial force F kN with tightening torque MS	Surface pressure on shaft P N/mm²	Surface pressure on hub P N/mm²	No. of screws	Tightening torque MS Nm
23350-01-2028	20	28	50	45	18	39	97	10	71	51	4 x M6	8
23350-01-2534	25	34	56	52	25	46	180	15	62	45	6 x M6	8
23350-01-3041	30	41	62	52	25	46	220	15	51	38	6 x M6	8
23350-01-3547	35	47	66	59	32	53	340	19	46	34	8 x M6	8
23350-01-4053	40	53	75	59	32	53	390	19	40	30	8 x M6	8
23350-01-4559	45	59	86	78	45	70	820	36	48	36	8 x M8	18
23350-01-5065	50	65	92	78	45	70	910	36	43	33	8 x M8	18
23350-01-5571	55	71	98	89	55	81	1100	41	36	28	9 x M8	18
23350-01-6077	60	77	104	89	55	81	1200	41	33	26	9 x M8	18

Notes

Keyless locking couplings Form B

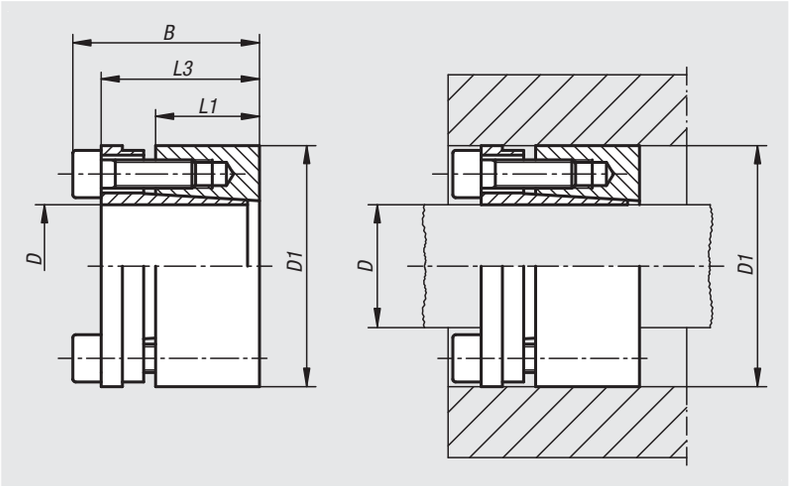

Material:
Steel.

Version:
Bright.

Sample order:
nlm 23351-1947

Note:
The keyless locking coupling can be fully recessed in a hub connection.

- for shaft diameters from 19 to 85 mm
- for high torques
- minimum axial offset possible
- self-centring

Order No.	D	D1	B	L1	L3	Max. torque M Nm with tightening torque MS	Max. axial force F kN with tightening torque MS
23351-1947	19	47	45	26	39	530	56
23351-2047	20	47	45	26	39	550	56
23351-2247	22	47	45	26	39	610	56
23351-2450	24	50	45	26	39	660	56
23351-2550	25	50	45	26	39	690	56
23351-2855	28	55	45	26	39	770	56
23351-3055	30	55	45	26	39	830	56
23351-3260	32	60	45	26	39	1180	74
23351-3560	35	60	45	26	39	1295	74
23351-3865	38	65	45	26	39	1400	74
23351-4065	40	65	45	26	39	1480	74
23351-4275	42	75	55	30	47	2120	101
23351-4575	45	75	55	30	47	2270	101
23351-4880	48	80	55	30	47	3230	135
23351-5080	50	80	55	30	47	3365	135
23351-5585	55	85	55	30	47	3700	135
23351-6090	60	90	55	30	47	4035	135
23351-6595	65	95	55	30	47	4370	135
23351-70110	70	110	67	40	62	7615	218
23351-75115	75	115	72	40	62	8160	218
23351-80120	80	120	72	40	62	8700	218
23351-85125	85	125	72	40	62	11560	272

Keyless locking couplings Form B

Assembly:
Lightly oil keyless locking coupling on the tapered faces and contact points of the shaft and hub. Do not use MoS2 or grease. Insert keyless locking coupling in the hub seat and slide onto shaft. Tighten screws crosswise in several increments to the defined tightening torque.

Dismantling: Remove all screws and screw into the extraction threads of the front flange. Tighten screws crosswise in several steps until the keyless locking coupling loosens.

Tolerances:
Shaft:
Recommended tolerance h8.
Surface quality Rz ≤ 16 µm.

Hub:
Recommended tolerance H8.
Surface quality Rz ≤ 16 µm.

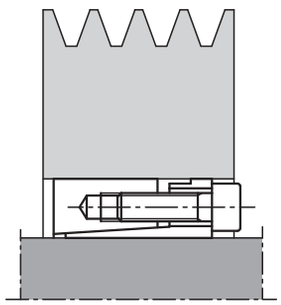

Order No.	Surface pressure on shaft P N/mm²	Surface pressure on hub P N/mm²	No. of screws	Tightening torque MS Nm
23351-1947	298	120	6 x M6	17
23351-2047	283	120	6 x M6	17
23351-2247	257	120	6 x M6	17
23351-2450	236	115	6 x M6	17
23351-2550	227	115	6 x M6	17
23351-2855	202	105	6 x M6	17
23351-3055	190	105	6 x M6	17
23351-3260	235	125	8 x M6	17
23351-3560	216	126	8 x M6	17
23351-3865	200	116	8 x M6	17
23351-4065	190	116	8 x M6	17
23351-4275	212	120	6 x M8	41
23351-4575	198	120	6 x M8	41
23351-4880	250	150	8 x M8	41
23351-5080	240	150	8 x M8	41
23351-5585	216	140	8 x M8	41
23351-6090	200	135	8 x M8	41
23351-6595	183	125	8 x M8	41
23351-70110	206	131	8 x M10	83
23351-75115	192	126	8 x M10	83
23351-80120	180	120	8 x M10	83
23351-85125	212	145	10 x M10	83

Keyless locking couplings Form C

with axial ring

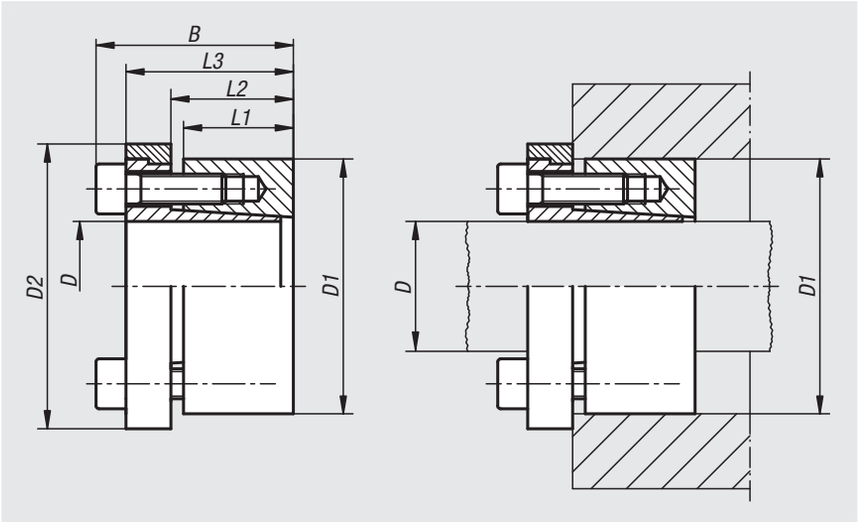

Material:
Steel.

Version:
Bright.

Sample order:
nlm 23352-1947

Note:
These keyless locking couplings are universally applicable.

- for shaft diameters from 19 to 85 mm
- for medium to high torques
- suitable for hubs with low wall thickness
- no axial offset
- self-centring

Order No.	D	D1	D2	B	L1	L2	L3	Max. torque M Nm with tightening torque MS	Max. axial force F kN with tightening torque MS
23352-1947	19	47	53	45	26	31	39	320	33
23352-2047	20	47	53	45	26	31	39	330	33
23352-2247	22	47	53	45	26	31	39	370	33
23352-2450	24	50	56	45	26	31	39	400	33
23352-2550	25	50	56	45	26	31	39	420	33
23352-2855	28	55	61	45	26	31	39	470	33
23352-3055	30	55	61	45	26	31	39	500	33
23352-3260	32	60	66	45	26	31	39	710	44
23352-3560	35	60	66	45	26	31	39	780	44
23352-3865	38	65	71	45	26	31	39	850	44
23352-4065	40	65	71	45	26	31	39	890	44
23352-4275	42	75	81	55	30	36	47	1270	61
23352-4575	45	75	81	55	30	36	47	1360	61
23352-4880	48	80	86	55	30	36	47	1940	81
23352-5080	50	80	86	55	30	36	47	2020	81
23352-5585	55	85	91	55	30	36	47	2220	81
23352-6090	60	90	96	55	30	36	47	2430	81
23352-6595	65	95	101	55	30	36	47	2630	81
23352-70110	70	110	116	72	40	46	62	4580	131
23352-75115	75	115	121	72	40	46	62	4900	131
23352-80120	80	120	126	72	40	46	62	5230	131
23352-85125	85	125	131	72	40	46	62	6950	163

Keyless locking couplings Form C

with axial ring

Assembly:
Lightly oil keyless locking coupling on the tapered faces and contact points of the shaft and hub. Do not use MoS2 or grease. Insert keyless locking coupling in the hub seat and slide onto shaft. Tighten screws crosswise in several increments to the defined tightening torque.

Dismantling: Remove all screws and screw into the extraction threads of the front flange. Tighten screws crosswise in several steps until the keyless locking coupling loosens.

Tolerances:
Shaft:
Recommended tolerance h8.
Surface quality Rz ≤ 16 µm.

Hub:
Recommended tolerance H8.
Surface quality Rz ≤ 16 µm.

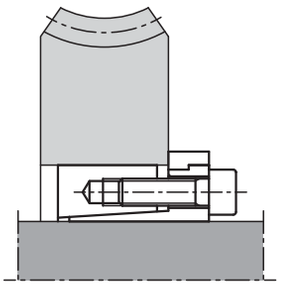

Order No.	Surface pressure on shaft P N/mm²	Surface pressure on hub P N/mm²	No. of screws	Tightening torque MS Nm
23352-1947	180	70	6 x M6	17
23352-2047	170	70	6 x M6	17
23352-2247	155	70	6 x M6	17
23352-2450	140	70	6 x M6	17
23352-2550	135	70	6 x M6	17
23352-2855	120	60	6 x M6	17
23352-3055	115	60	6 x M6	17
23352-3260	140	75	8 x M6	17
23352-3560	130	75	8 x M6	17
23352-3865	120	70	8 x M6	17
23352-4065	110	70	8 x M6	17
23352-4275	130	70	6 x M8	41
23352-4575	120	70	6 x M8	41
23352-4880	150	90	8 x M8	41
23352-5080	145	90	8 x M8	41
23352-5585	130	85	8 x M8	41
23352-6090	120	80	8 x M8	41
23352-6595	110	75	8 x M8	41
23352-70110	125	80	8 x M10	83
23352-75115	115	75	8 x M10	83
23352-80120	110	70	8 x M10	83
23352-85125	125	85	10 x M10	83

Keyless locking couplings Form D

compact design

Material:
Steel.

Version:
Bright.

Sample order:
nlm 23354-0516

Note:
For applications that require a small construction volume and low surface pressure. The keyless locking coupling can be fully recessed in a hub connection.

- for shaft diameters from 5 to 50 mm
- for medium torques
- suitable for hubs with low wall thickness
- minimum axial offset possible
- self-centring

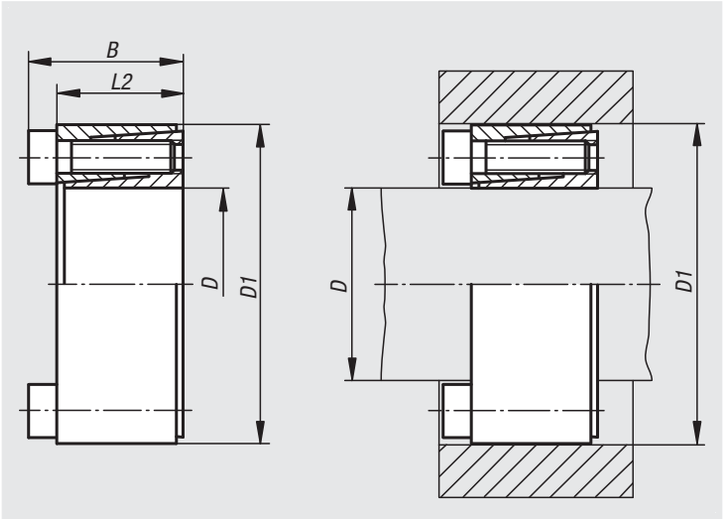

Order No.	D	D1	B	L2	Max. torque M Nm with tightening torque MS	Max. axial force F kN with tightening torque MS
23354-0516	5	16	13,5	11	6	2
23354-0616	6	16	13,5	11	6	2
23354-063516	6,35	16	13,5	11	6	2
23354-0717	7	17	13,5	11	8	2
23354-0818	8	18	13,5	11	10	2,5
23354-0920	9	20	15,5	13	15	3
23354-095320	9,53	20	15,5	13	15	3
23354-1020	10	20	15,5	13	15	3
23354-1122	11	22	15,5	13	18	3
23354-1222	12	22	15,5	13	20	3
23354-1426	14	26	20	17	35	5
23354-1528	15	28	20	17	40	5
23354-1632	16	32	21	17	70	8
23354-1735	17	35	25	21	75	8
23354-1835	18	35	25	21	80	8
23354-1935	19	35	25	21	85	8
23354-2038	20	38	26	21	150	15
23354-2240	22	40	26	21	160	14
23354-2447	24	47	32	26	250	20
23354-2547	25	47	32	26	260	20
23354-25447	25,4	47	32	26	265	20
23354-2850	28	50	32	26	440	30
23354-3055	30	55	32	26	470	30
23354-3255	32	55	32	26	500	30
23354-3560	35	60	37	29	730	40
23354-3865	38	65	37	29	800	40
23354-4065	40	65	37	29	840	40
23354-4275	42	75	44	36	1200	55
23354-4575	45	75	44	36	1300	55
23354-4880	48	80	44	36	1850	75
23354-5080	50	80	44	36	1900	75

Keyless locking couplings Form D

compact design

Assembly:
Lightly oil keyless locking coupling on the tapered faces and contact points of the shaft and hub. Do not use MoS2 or grease. Insert keyless locking coupling in the hub seat and slide onto shaft. Tighten screws crosswise in several increments to the defined tightening torque.

Dismantling: Remove all screws and screw into the extraction threads of the front flange. Tighten screws crosswise in several steps until the keyless locking coupling loosens.

Tolerances:
Shaft:
Recommended tolerance h8.
Surface quality Rz ≤ 16 µm.

Hub:
Recommended tolerance H8.
Surface quality Rz ≤ 16 µm.

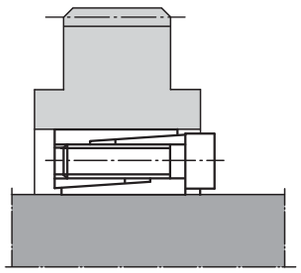

Order No.	Surface pressure on shaft P N/mm²	Surface pressure on hub P N/mm²	No. of screws	Tightening torque MS Nm
23354-0516	150	55	3 x M2,5	1,2
23354-0616	150	55	3 x M2,5	1,2
23354-063516	140	55	3 x M2,5	1,2
23354-0717	125	55	3 x M2,5	1,2
23354-0818	110	50	3 x M2,5	1,2
23354-0920	120	55	4 x M2,5	1,2
23354-095320	110	55	4 x M2,5	1,2
23354-1020	110	55	4 x M2,5	1,2
23354-1122	100	50	4 x M2,5	1,2
23354-1222	90	50	4 x M2,5	1,2
23354-1426	105	55	4 x M3	2,1
23354-1528	100	50	4 x M3	2,1
23354-1632	130	65	4 x M4	4,9
23354-1735	120	60	4 x M4	4,9
23354-1835	115	60	4 x M4	4,9
23354-1935	110	60	4 x M4	4,9
23354-2038	140	75	4 x M5	9,7
23354-2240	130	70	4 x M5	17
23354-2447	140	75	4 x M6	17
23354-2547	135	75	4 x M6	17
23354-25447	130	75	4 x M6	17
23354-2850	185	100	6 x M6	17
23354-3055	175	95	6 x M6	17
23354-3255	165	95	6 x M6	17
23354-3560	165	95	8 x M6	17
23354-3865	155	90	8 x M6	17
23354-4065	145	90	8 x M6	17
23354-4275	165	90	6 x M8	41
23354-4575	155	90	6 x M8	41
23354-4880	195	115	8 x M8	41
23354-5080	185	115	8 x M8	41

Keyless locking couplings, Form D

stainless steel

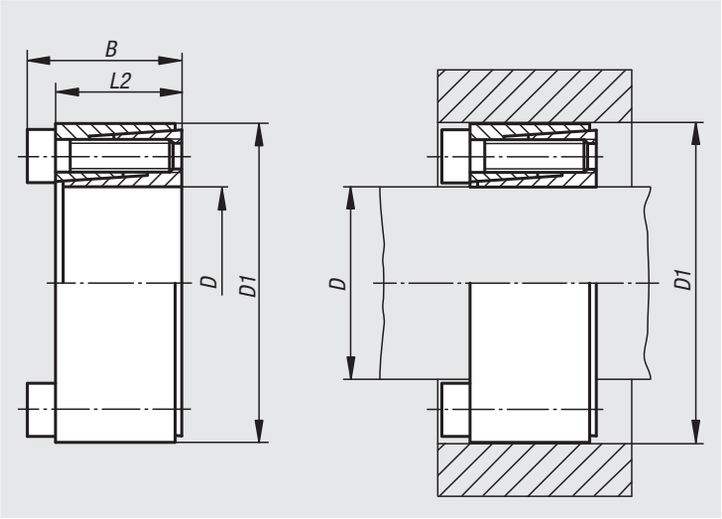

Material:
Coupling stainless steel 1.4057.
Screws stainless steel 1.4301.

Version:
Bright.

Sample order:
nlm 23354-01-0616

Note:
For applications that require a small construction volume and low surface pressure. The keyless locking coupling can be fully recessed in a hub connection.

- for shaft diameters 6 - 20 mm
- suitable for hubs with low wall thickness
- minimum axial offset possible
- self-centring

Assembly:
Lightly oil keyless locking coupling on the tapered faces and contact points of the shaft and hub. Do not use MoS2 or grease. Insert keyless locking coupling in the hub seat and slide onto shaft. Tighten screws crosswise in several increments to the defined tightening torque.

Dismantling: Remove all screws and screw into the extraction threads of the front flange. Tighten screws crosswise in several steps until the keyless locking coupling loosens.

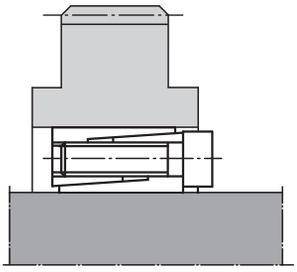

Tolerances:
Shaft:
Recommended tolerance h8.
Surface quality Rz ≤ 16 µm.

Hub:
Recommended tolerance H8.
Surface quality Rz ≤ 16 µm.

Order No.	D	D1	B	L2	Max. torque M Nm with tightening torque MS	Max. axial force F kN with tightening torque MS	Surface pressure on shaft P N/mm²	Surface pressure on hub P N/mm²	No. of screws	Tightening torque MS Nm
23354-01-0616	6	16	13,5	11	3	0,9	49	19	3 x M2,5	0,5
23354-01-0717	7	17	13,5	11	3	0,9	42	17	3 x M2,5	0,5
23351-01-0818	8	18	13,5	11	4	0,9	37	17	3 x M2,5	0,5
23354-01-0920	9	20	15,5	13	6	1,2	37	17	4 x M2,5	0,5
23354-01-1020	10	20	15,5	13	6	1,2	33	17	4 x M2,5	0,5
23354-01-1122	11	22	15,5	13	7	1,2	30	15	4 x M2,5	0,5
23354-01-1222	12	22	15,5	13	7	1,2	26	15	4 x M2,5	0,5
23354-01-1426	14	26	20	17	13	1,9	28	15	4 x M3	0,9
23354-01-1528	15	28	20	17	14	1,9	26	14	4 x M3	0,9
23354-01-1632	16	32	21	17	28	3,5	45	23	4 x M4	2,2
23354-01-1835	18	35	25	21	32	3,5	32	17	4 x M4	2,2
23354-01-1935	19	35	25	21	34	3,5	31	17	4 x M4	2,2
23354-01-2038	20	38	26	21	55	5,5	45	24	4 x M5	4,2

Notes

Keyless locking couplings Form E

short version

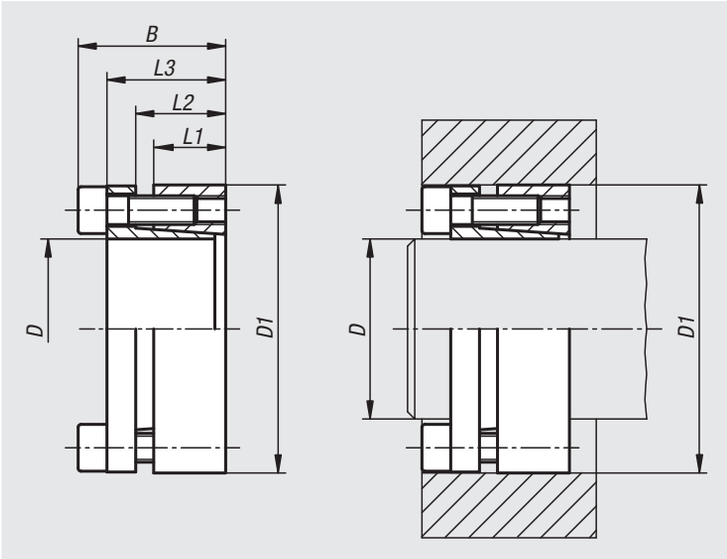

Material:
Steel.

Version:
Bright.

Sample order:
nlm 23356-1947

Note:
Keyless locking coupling with short axial width. The keyless locking coupling can be fully recessed in a hub connection.

- for shaft diameters from 19 to 85 mm
- for medium to high torques
- minimum axial offset when mounting
- self-centring

Assembly:
Lightly oil keyless locking coupling on the tapered faces and contact points of the shaft and hub. Do not use MoS2 or grease. Insert keyless locking coupling in the hub seat and slide onto shaft. Tighten screws crosswise in several increments to the defined tightening torque.

Dismantling: Remove all screws and screw into the extraction threads of the front flange. Tighten screws crosswise in several steps until the keyless locking coupling loosens.

Tolerances:
Shaft:
Recommended tolerance h8.
Surface quality Rz ≤ 16 µm.

Hub:
Recommended tolerance H8.
Surface quality Rz ≤ 16 µm.

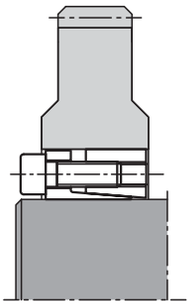

Keyless locking couplings Form E

short version

Order No.	D	D1	B	L1	L2	L3	Max. torque M Nm with tightening torque MS	Max. axial force F kN with tightening torque MS
23356-1947	19	47	34	17	22	28	355	31
23356-2047	20	47	34	17	22	28	360	33
23356-2247	22	47	34	17	22	28	400	33
23356-2450	24	50	34	17	22	28	440	36
23356-2550	25	50	34	17	22	28	560	36
23356-2855	28	55	34	17	22	28	625	36
23356-3055	30	55	34	17	22	28	650	36
23356-3260	32	60	34	17	22	28	950	50
23356-3560	35	60	34	17	22	28	1050	50
23356-3865	38	65	34	17	22	28	1140	50
23356-4065	40	65	34	17	22	28	1200	50
23356-4275	42	75	41	20	25	33	2030	70
23356-4575	45	75	41	20	25	33	2180	70
23356-4880	48	80	41	20	24	33	2330	80
23356-5080	50	80	41	20	24	33	2430	85
23356-5585	55	85	41	20	24	33	3050	100
23356-6090	60	90	41	20	24	33	3350	100
23356-6595	65	95	41	20	24	33	4080	110
23356-70110	70	110	50	24	29	40	6280	160
23356-75115	75	115	50	24	29	40	6680	160
23356-80120	80	120	50	24	29	40	7130	160
23356-85125	85	125	50	24	29	40	8750	180

Order No.	Surface pressure on shaft P N/mm²	Surface pressure on hub P N/mm²	No. of screws	Tightening torque MS Nm
23356-1947	280	120	5 x M6	14
23356-2047	280	120	5 x M6	14
23356-2247	260	125	5 x M6	14
23356-2450	245	120	6 x M6	14
23356-2550	280	140	6 x M6	14
23356-2855	250	130	6 x M6	14
23356-3055	235	130	6 x M6	14
23356-3260	290	150	8 x M6	14
23356-3560	290	150	8 x M6	14
23356-3865	250	145	8 x M6	14
23356-4065	230	145	8 x M6	14
23356-4275	305	170	7 x M8	35
23356-4575	285	170	7 x M8	35
23356-4880	270	160	7 x M8	35
23356-5080	260	160	7 x M8	35
23356-5585	270	175	8 x M8	35
23356-6090	245	165	8 x M8	35
23356-6595	255	175	9 x M8	35
23356-70110	280	180	8 x M10	70
23356-75115	260	170	8 x M10	70
23356-80120	250	170	8 x M10	70
23356-85125	260	180	9 x M10	70

Keyless locking couplings Form F

short version with axial ring

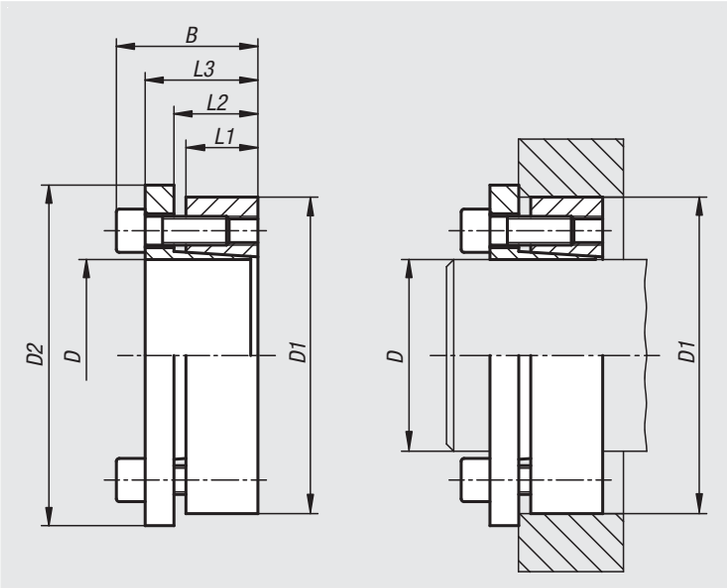

Material:
Steel.

Version:
Bright.

Sample order:
nlm 23358-1947

Note:
Keyless locking coupling with short axial width.

- for shaft diameters from 19 to 85 mm
- for medium to high torques
- no axial offset when mounting
- self-centring

Assembly:
Lightly oil keyless locking coupling on the tapered faces and contact points of the shaft and hub. Do not use MoS2 or grease. Insert keyless locking coupling in the hub seat and slide onto shaft. Tighten screws crosswise in several increments to the defined tightening torque.

Dismantling: Remove all screws and screw into the extraction threads of the front flange. Tighten screws crosswise in several steps until the keyless locking coupling loosens.

Tolerances:
Shaft:
Recommended tolerance h8.
Surface quality Rz ≤ 16 µm.

Hub:
Recommended tolerance H8.
Surface quality Rz ≤ 16 µm.

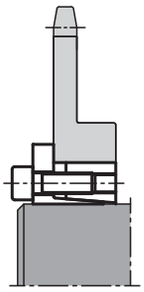

Keyless locking couplings Form F

short version with axial ring

Order No.	D	D1	D2	B	L1	L2	L3	Max. torque M Nm with tightening torque MS	Max. axial force F kN with tightening torque MS
23358-1947	19	47	56	34	17	23	28	270	28
23358-2047	20	47	56	34	17	23	28	280	28
23358-2247	22	47	56	34	17	23	28	310	28
23358-2450	24	50	59	34	17	23	28	400	32
23358-2550	25	50	59	34	17	23	28	440	34
23358-2855	28	55	64	34	17	23	28	490	34
23358-3055	30	55	64	34	17	23	28	530	34
23358-3260	32	60	69	34	17	23	28	750	46
23358-3560	35	60	69	34	17	23	28	820	46
23358-3865	38	65	74	34	17	23	28	890	46
23358-4065	40	65	74	34	17	23	28	940	46
23358-4275	42	75	84	41	20	27	33	1600	70
23358-4575	45	75	84	41	20	27	33	1720	70
23358-4880	48	80	89	41	20	27	33	1740	70
23358-5080	50	80	89	41	20	27	33	1890	74
23358-5585	55	85	94	41	20	27	33	2400	76
23358-6090	60	90	99	41	20	27	33	2650	76
23358-6595	65	95	104	41	20	27	33	3190	80
23358-70110	70	110	119	50	24	32	40	4910	130
23358-75115	75	115	124	50	24	32	40	5150	130
23358-80120	80	120	129	50	24	32	40	5490	130
23358-85125	85	125	134	50	24	32	40	6620	140

Order No.	Surface pressure on shaft P N/mm²	Surface pressure on hub P N/mm²	No. of screws	Tightening torque MS Nm
23358-1947	215	95	5 x M6	17
23358-2047	215	95	5 x M6	17
23358-2247	195	95	5 x M6	17
23358-2450	215	105	6 x M6	17
23358-2550	210	105	6 x M6	17
23358-2855	195	100	6 x M6	17
23358-3055	185	100	6 x M6	17
23358-3260	210	110	8 x M6	17
23358-3560	185	110	8 x M6	17
23358-3865	190	110	8 x M6	17
23358-4065	185	110	8 x M6	17
23358-4275	240	130	7 x M8	41
23358-4575	225	130	7 x M8	41
23358-4880	234	130	7 x M8	41
23358-5080	205	125	7 x M8	41
23358-5585	210	130	8 x M8	41
23358-6090	185	120	8 x M8	41
23358-6595	195	130	9 x M8	41
23358-70110	215	135	8 x M10	83
23358-75115	195	125	8 x M10	83
23358-80120	185	120	8 x M10	83
23358-85125	195	130	9 x M10	83

Keyless locking couplings Form G

increased tolerance range

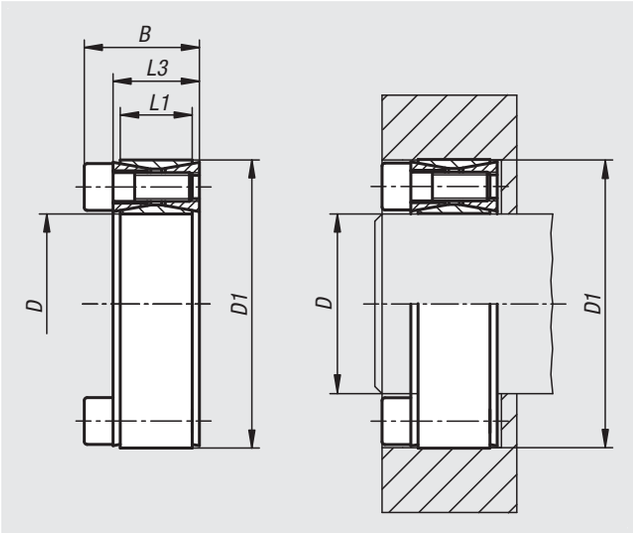

Material:
Steel.

Version:
Bright.

Sample order:
nlm 23360-1947

Note:
Keyless locking coupling with increased tolerance range for shaft and hub. Extremely small design ideal for use when there is lack of space. Self-release when dismantling.

- for shaft diameters from 19 to 85 mm
- for high torques
- no axial offset when mounting
- not self-centring (concentricity of hub to shaft depends on the fit and length of the guide)

Assembly:
Lightly oil keyless locking coupling on the tapered faces and contact points of the shaft and hub. Do not use MoS2 or grease. Insert keyless locking coupling in the hub seat and slide onto shaft. Tighten screws crosswise in several increments to the defined tightening torque.

Dismantling: Remove all screws and screw into the extraction threads of the front flange. Tighten screws crosswise in several steps until the keyless locking coupling loosens.

Tolerances:
Shaft:
Recommended tolerance h11.
Surface quality Rz ≤ 16 µm.

Hub:
Recommended tolerance H11.
Surface quality Rz ≤ 16 µm.

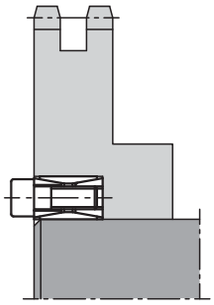

Keyless locking couplings Form G

increased tolerance range

Order No.	D	D1	B	L1	L3	Max. torque M Nm with tightening torque MS	Max. axial force F kN with tightening torque MS
23360-1947	19	47	27,5	17	20	306	32
23360-2047	20	47	27,5	17	20	321	32
23360-2247	22	47	27,5	17	20	351	32
23360-2450	24	50	27,5	17	20	429	36
23360-2550	25	50	27,5	17	20	446	36
23360-2855	28	55	27,5	17	20	496	35
23360-3055	30	55	27,5	17	20	529	35
23360-3260	32	60	27,5	17	20	749	47
23360-3560	35	60	27,5	17	20	815	47
23360-3865	38	65	27,5	17	20	1101	58
23360-4065	40	65	27,5	17	20	1154	58
23360-4275	42	75	33,5	20	24	1768	84
23360-4575	45	75	33,5	20	24	1886	84
23360-4880	48	80	33,5	20	24	2004	83
23360-5080	50	80	33,5	20	24	2082	83
23360-5585	55	85	33,5	20	24	2656	97
23360-6090	60	90	33,5	20	24	2881	96
23360-6595	65	95	33,5	20	24	3550	109
23360-70110	70	110	39,5	24	28	5432	155
23360-75115	75	115	39,5	24	28	5795	155
23360-80120	80	120	39,5	24	28	6156	154
23360-85125	85	125	39,5	24	28	7447	175

Order No.	Surface pressure on shaft P N/mm²	Surface pressure on hub P N/mm²	No. of screws	Tightening torque MS Nm
23360-1947	265	107	8 x M6	17
23360-2047	251	107	8 x M6	17
23360-2247	227	106	8 x M6	17
23360-2450	232	112	9 x M6	17
23360-2550	223	111	9 x M6	17
23360-2855	197	100	9 x M6	17
23360-3055	183	100	9 x M6	17
23360-3260	228	122	12 x M6	17
23360-3560	208	121	12 x M6	17
23360-3865	238	139	15 x M6	17
23360-4065	225	139	15 x M6	17
23360-4275	266	149	12 x M8	41
23360-4575	247	148	12 x M8	41
23360-4880	231	138	12 x M8	41
23360-5080	221	138	12 x M8	41
23360-5585	233	151	14 x M8	41
23360-6090	212	142	14 x M8	41
23360-6595	223	153	16 x M8	41
23360-70110	245	156	14 x M10	83
23360-75115	228	149	14 x M10	83
23360-80120	213	142	14 x M10	83
23360-85125	228	155	16 x M10	83

Keyless locking couplings Form G

stainless steel

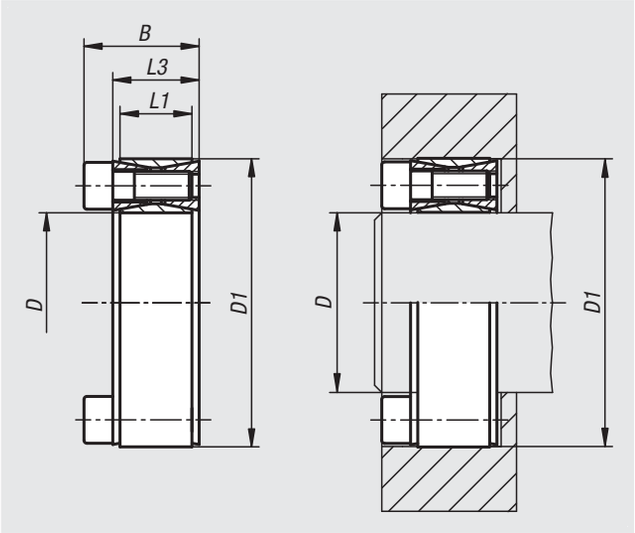

Material:
Coupling stainless steel 1.4057.
Screws stainless steel 1.4301.

Version:
Bright.

Sample order:
nlm 23360-01-2047

Note:
Keyless locking coupling for shaft and hub. Extremely small design, ideal for use in tight spaces. Self-release during dismantling.

- for shaft diameters 20 - 80 mm
- no axial offset when mounting
- not self-centring (concentricity of hub to shaft depends on the fit and length of the guide)

Assembly:
Lightly oil keyless locking coupling on the tapered faces and contact points of the shaft and hub. Do not use MoS2 or grease. Insert keyless locking coupling in the hub seat and slide onto shaft. Tighten screws crosswise in several increments to the defined tightening torque.

Dismantling: Remove all screws and screw into the extraction threads of the front flange. Tighten screws crosswise in several steps until the keyless locking coupling loosens.

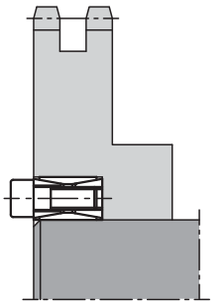

Tolerances:
Shaft:
Recommended tolerance h11.
Surface quality Rz ≤ 16 µm.

Hub:
Recommended tolerance H11.
Surface quality Rz ≤ 16 µm.

Order No.	D	D1	B	L1	L3	Max. torque M Nm with tightening torque MS	Max. axial force F kN with tightening torque MS	Surface pressure on shaft P N/mm²	Surface pressure on hub P N/mm²	No. of screws	Tightening torque MS Nm
23360-01-2047	20	47	26	17	20	110	11	133	57	8 x M6	8
23360-01-2550	25	50	26	17	20	155	12	120	60	9 x M6	8
23360-01-3055	30	55	26	17	20	185	12	100	55	9 x M6	8
23360-01-3560	35	60	26	17	20	290	16	114	67	12 x M6	8
23360-01-4065	40	65	26	17	20	410	20	125	77	15 x M6	8
23360-01-4575	45	75	32	20	24	635	28	129	78	12 x M8	18
23360-01-5080	50	80	32	20	24	700	28	116	73	12 x M8	18
23360-01-5585	55	85	32	20	24	905	33	123	80	14 x M8	18
23360-01-6090	60	90	32	20	24	990	33	113	76	14 x M8	18
23360-01-6595	65	95	32	20	24	1225	37	119	82	16 x M8	18
23360-01-70110	70	110	38	24	28	1875	53	131	84	14 x M10	35
23360-01-75115	75	115	38	24	28	2010	53	123	80	14 x M10	35
23360-01-80120	80	120	38	24	28	2145	53	115	77	14 x M10	35

Notes

Keyless locking couplings Form H

for high torques

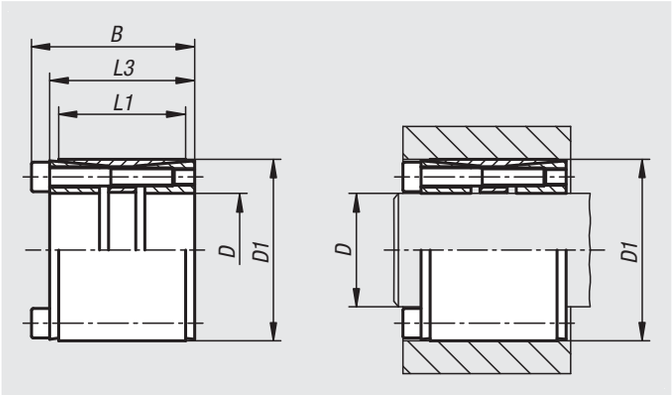

Material:
Steel.

Version:
Bright.

Sample order:
nlm 23362-2555

Note:
Keyless locking coupling for extremely high torques.

- for shaft diameters from 25 to 85 mm
- for high torques
- minimum axial offset when mounting
- self-centring

Assembly:
Lightly oil keyless locking coupling on the tapered faces and contact points of the shaft and hub. Do not use MoS2 or grease. Insert keyless locking coupling in the hub seat and slide onto shaft. Tighten screws crosswise in several increments to the defined tightening torque.

Dismantling: Remove all screws and screw into the extraction threads of the front flange. Tighten screws crosswise in several steps until the keyless locking coupling loosens.

Tolerances:
Shaft:
Recommended tolerance h8.
Surface quality Rz ≤ 16 µm.

Hub:
Recommended tolerance H8.
Surface quality Rz ≤ 16 µm.

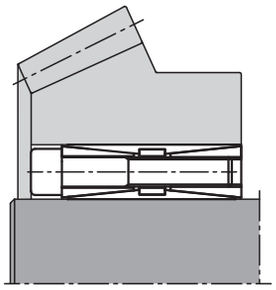

Keyless locking couplings Form H

for high torques

Order No.	D	D1	B	L1	L3	Max. torque M Nm with tightening torque MS	Max. axial force F kN with tightening torque MS
23362-2555	25	55	46	32	40	649	64
23362-2855	28	55	46	32	40	875	64
23362-3055	30	55	46	32	40	950	64
23362-3560	35	60	60	44	54	1300	74
23362-3865	38	65	60	45	54	1600	84
23362-4065	40	65	60	45	54	1680	84
23362-4275	42	75	62	44	54	2800	135
23362-4575	45	75	62	44	54	3050	135
23362-4880	48	80	75	56	67	3700	155
23362-5080	50	80	74	56	66	3950	155
23362-5585	55	85	74	56	66	4900	174
23362-6090	60	90	74	56	66	5900	193
23362-6595	65	95	74	56	66	6450	193
23362-70110	70	110	90	70	80	10950	313
23362-75115	75	115	90	70	80	11700	313
23362-80120	80	120	90	70	80	13750	344
23362-85125	85	125	90	70	80	16000	375

Order No.	Surface pressure on shaft P N/mm²	Surface pressure on hub P N/mm²	No. of screws	Tightening torque MS Nm
23362-2555	155	80	6 x M6	17
23362-2855	250	95	6 x M6	17
23362-3055	235	95	6 x M6	17
23362-3560	165	75	7 x M6	17
23362-3865	165	95	8 x M6	17
23362-4065	155	95	8 x M6	17
23362-4275	250	110	7 x M8	41
23362-4575	235	110	7 x M8	41
23362-4880	195	90	8 x M8	41
23362-5080	185	90	8 x M8	41
23362-5585	190	100	9 x M8	41
23362-6090	195	100	10 x M8	41
23362-6595	180	95	10 x M8	41
23362-70110	210	110	10 x M10	83
23362-75115	200	105	10 x M10	83
23362-80120	205	110	11 x M10	83
23362-85125	210	115	12 x M10	83

Keyless locking couplings with central nut

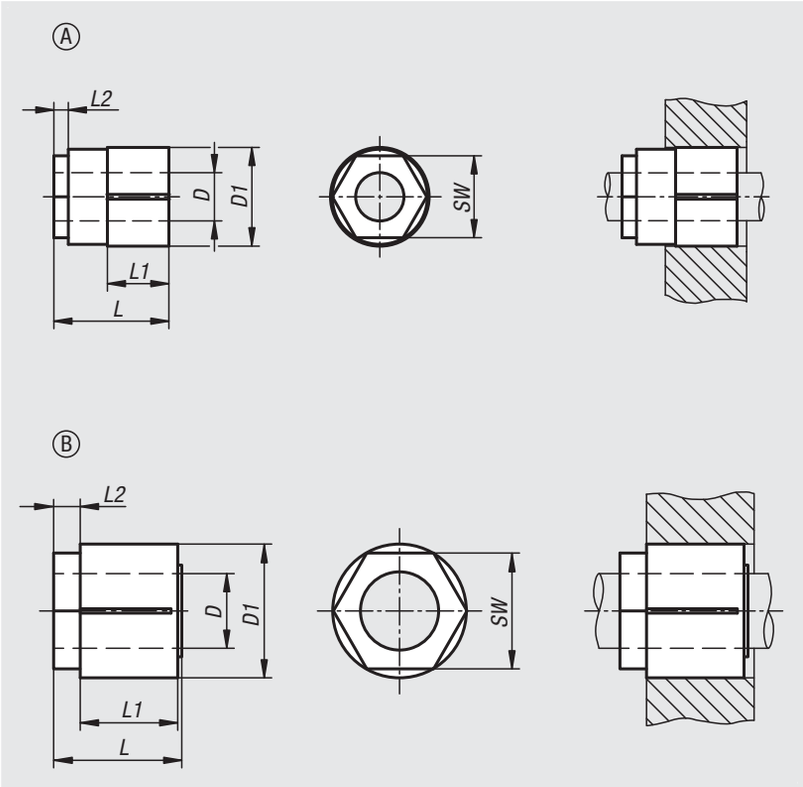

Material:
Steel.

Version:
Bright.

Sample order:
nlm 23368-0516

Note:
Keyless locking coupling with low mass and moment of inertia. Easy to connect and release – no jamming on the shaft. Perfect for zero backlash connections. Excellent concentricity and running. Suitable for keyed and keyless shafts.

- for shaft diameters from 5 to 35 mm
- for high torques
- minimum axial offset when mounting
- self-centring

Assembly:
Shaft and hub must be free of oil, grease and dirt. Do not lubricate keyless locking coupling. Insert keyless locking coupling in the hub seat and slide onto shaft. Tighten nut by hand and use a torque wrench to tighten to the defined tightening torque.

Tolerances:
Shaft diameter and hub hole
Form A ±0.04 mm.
Form B ±0.08 mm.
Surface quality Rz ≤ 16 µm.

Keyless locking couplings with central nut

Order No.	Form	D	D1	L	L1	L2	SW	Max. torque M Nm with tightening torque MS	Max. axial force F kN with tightening torque MS	Surface pressure on hub P N/mm²	Tightening torque MS Nm
23368-0516	A	5	16	19	9,5	3	13	10	4	110	18
23368-0616	A	6	16	19	9,5	3	13	13	4,3	110	18
23368-0720	A	7	20	22	11	3	16	13	3,7	65	20
23368-0820	A	8	20	22	11	3	16	15	3,75	65	20
23368-0920	A	9	20	22	11	3	16	18	4	65	20
23368-1023	A	10	23	25,5	12,5	5	19	23	4,6	55	25
23368-1123	A	11	23	25,5	12,5	5	19	25	4,5	55	25
23368-1223	A	12	23	25,5	12,5	5	19	28	4,6	55	25
23368-1426	A	14	26	28,5	16	5	22	46	6,6	64	50
23368-1526	A	15	26	28,5	16	5	22	49	6,59	64	50
23368-1626	A	16	26	28,5	16	5	22	52	6,5	64	50
23368-1732	B	17	32	33	21	11	30	174	18	100	110
23368-1832	B	18	32	33	21	11	30	198	21	92	110
23368-2035	B	20	35	35	23	11	32	258	26	82	150
23368-2235	B	22	35	35	23	11	32	293	27	80	150
23368-2438	B	24	38	35	23	11	36	330	29	87	185
23368-2538	B	25	38	35	23	11	36	368	31	94	185
23368-3045	B	30	45	37	25	11	46	550	45	108	300
23368-3250	B	32	50	41	28	12	50	616	44	100	265
23368-3550	B	35	50	41	28	12	50	681	42	91	265

Shaft-hub clamping sets

stainless steel

Material:
Stainless steel 1.4301.

Version:
Bright.

Sample order:
nlm 23370-040008

Note:
Self-centring and play-free shaft/hub clamping sets with a very low moment of inertia and minimal space requirement. The clamping sets produce a friction connection between shaft and hub. Central nut for quick mounting. After the nut is loosened, the set can be removed with a puller tool.
Clamping set concentricity ±0.01 mm.

Assembly:
To achieve the specified torque, the clamping set must be installed grease-free. The entire length of the clamping set must be in contact with the shaft. For maximum torque the shaft and hub must be sufficiently firm (min. yield strength 350 N/mm^2).

Required tolerances:
Shaft: h7
Hub: H7

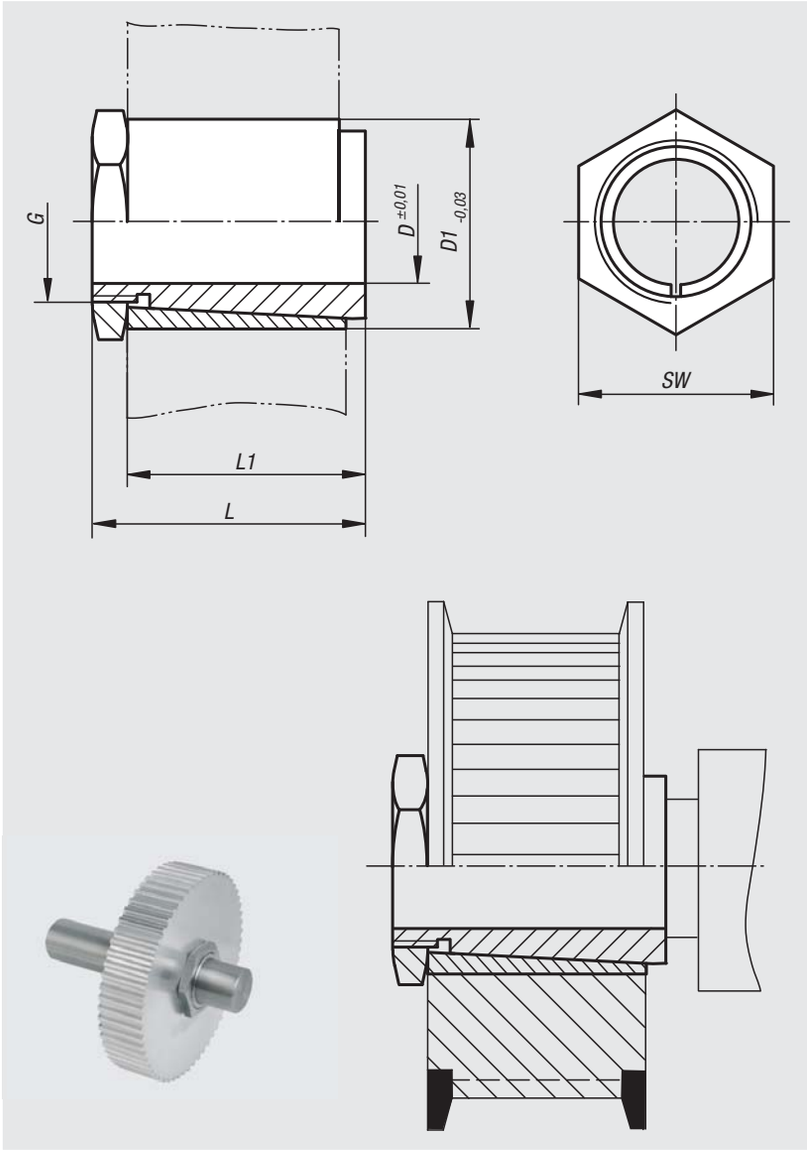

Order No.	D	D1	L	L1	G	SW	Tightening torque max. Nm	Transmissible torque T Nm
23370-040008	4	8	15	12,5	M6x0,5	8	4	3
23370-050010	5	10	15	12,5	M8x0,5	10	5	4
23370-060010	6	10	15	12,5	M8x0,5	10	8	7
23370-063510	6,35	10	15	12,5	M8x0,5	10	8	7
23370-080014	8	14	22	19	M12x1	17	15	14
23370-090014	9	14	22	19	M12x1	17	15	14
23370-100017	10	17	22	18,5	M15x1	19	19	18
23370-120017	12	17	22	18,5	M15x1	19	19	18
23370-140020	14	20	28	23	M17x1	22	25	24
23370-150020	15	20	28	23	M17x1	22	25	24
23370-160023	16	23	28	23	M20x1	27	27	26
23370-190025	19	25	28	23	M22x1	27	30	29
23370-200028	20	28	28	23	M25x1	30	32	31

Notes

Shrink discs Form A

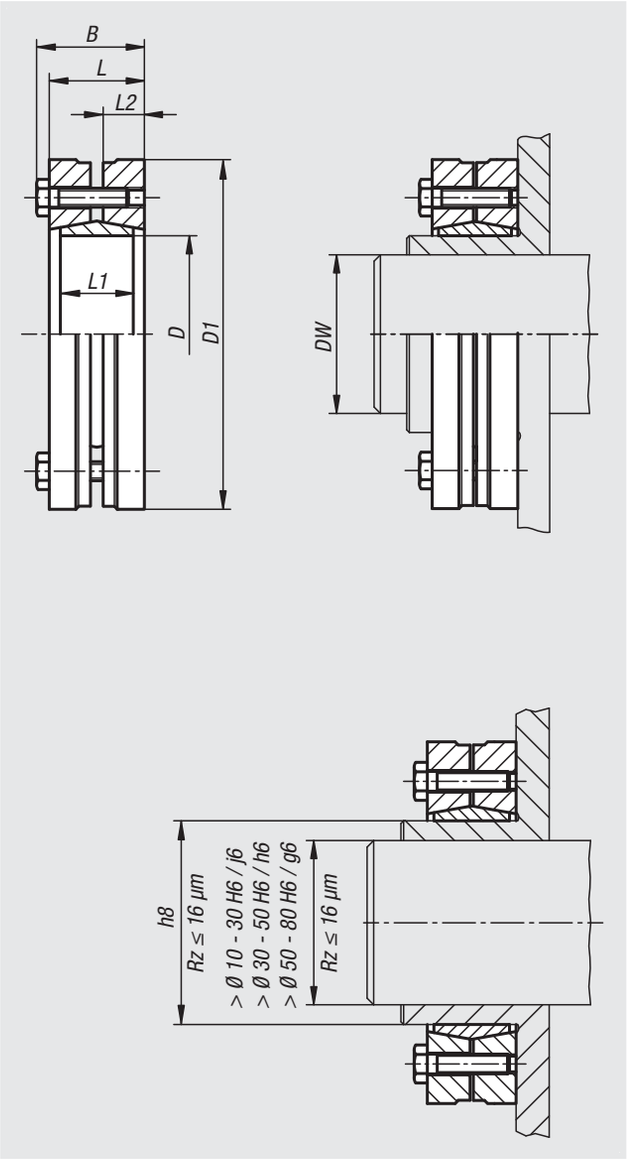

Material:
Steel.

Version:
Bright.

Sample order:
nlm 23380-1437

Note:
Shrink disc to connect a hollow hub to a shaft. They are mounted on the OD of the hub and generate pressure on the hub wall by reducing the ID with wedge-formed rings, creating a press fit between the hub and shaft. They are suitable for static, dynamic and shock loads.

- for extremely high torques
- no axial shaft/hub offset when assembling
- self-centring

Assembly:
Remove existing transportation locks. Clean and lightly oil shaft, internal and external hub diameters. Do not use MoS2 or grease. Slide shrink disc onto hub. Then slide unit (shrink disc/hub) onto shaft and position correctly. Gently tighten clamping screws one after the other by hand. Then use a torque wrench to tighten the clamping screws crosswise in several increments to the defined tightening torque MS.
1st increment approx. 33% MS
2nd increment approx. 66% MS
3rd increment 100% MS

Dismantling: Gradually loosen all screws one after the other but do not fully remove from the thread. The shrinking disc usually loosens itself.

Shrink discs Form A

Order No.	D	D1	DW	B	L	L1	L2	Max. torque M Nm with tightening torque MS	Max. axial force F kN with tightening torque MS	Surface pressure on hub P N/mm²	No. of screws	Tightening torque MS Nm
23380-1437	14	37	10	14,8	12	9	5	30	8	278	3 x M4	2,4
			11					37	8			
			12					48	10			
23380-1641	16	41	12	18,5	15	12	6,25	70	15	336	4 x M5	4
			13					90	18			
			14					110	20			
23380-1844	18	44	14	18,5	15	12	6,25	90	16	299	4 x M5	4
			15					100	18			
			16					120	20			
23380-2046	20	46	15	21	17,5	12	7	110	20	336	5 x M5	4
			16					140	22			
			17					160	24			
23380-2150	21	50	16	22,5	19	15	8	200	31	384	6 x M5	5
			17					230	34			
			18					260	37			
23380-2450	24	50	19	22,5	19	15	8	240	32	336	6 x M5	5
			20					270	35			
			21					300	38			
23380-3052	30	52	24	26	22,5	18	9,5	350	38	261	7 x M5	5
			25					400	41			
			26					440	43			
23380-3672	36	72	28	27,5	23,5	18	10	590	53	303	5 x M6	12
			30					690	58			
			31					700	58			
23380-3872	38	72	29	30	26	21	10,5	700	62	295	6 x M6	12
			30					770	65			
			31					780	63			
23380-4072	40	72	30	28,5	24,5	19	10,5	720	61	310	6 x M6	12
			31					730	59			
			32					790	62			
23380-4480	44	80	32	30	26	20	11	800	63	312	7 x M6	12
			35					1000	73			
			36					1050	76			
23380-4880	48	80	36	30	26	22	11	900	65	260	7 x M6	12
			38					1050	72			
			40					1200	78			
23380-5090	50	90	38	31,5	27,5	22,5	12	1350	89	314	8 x M6	12
			40					1500	96			
			42					1700	103			
23380-55100	55	100	42	34,5	30,5	23	13	1300	78	248	8 x M6	12
			45					1550	87			
			48					1800	96			
23380-62110	62	110	48	34,5	30,5	23	13	2400	126	330	12 x M6	12
			50					2650	133			
			52					2800	136			
23380-68115	68	115	50	34,5	30,5	23,5	13	1900	95	245	10 x M6	12
			55					2250	104			
			60					2850	121			
23380-75138	75	138	55	37,8	32,5	25	14	2650	121	277	7 x M8	30
			60					3300	139			
			65					4050	158			
23380-80145	80	145	60	37,8	32,5	25	14	3200	126	259	7 x M8	30
			65					3900	143			
			70					4600	160			

Shrink discs stainless steel Form A

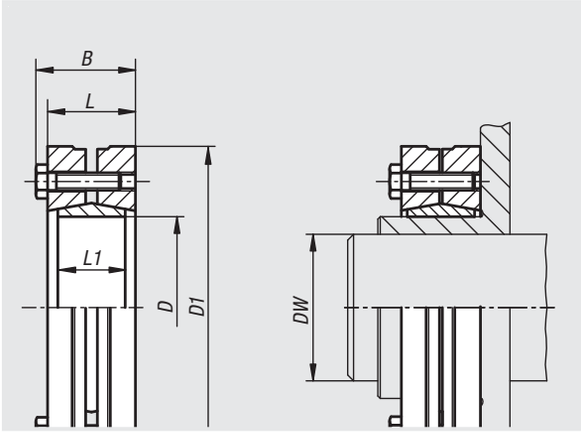

Material:
Stainless steel 1.4051.

Version:
Bright.

Sample order:
nlm 23380-01-2450

Note:
Shrink disc to connect a hollow hub to a shaft. They are mounted on the OD of the hub and generate pressure on the hub wall by reducing the ID with wedge-formed rings, creating a press fit between the hub and shaft. They are suitable for static, dynamic and shock loads.

- for extremely high torques
- no axial shaft/hub offset when assembling
- self-centring

Assembly:
Remove existing transportation locks. Clean and lightly oil shaft, internal and external hub diameters. Do not use MoS2 or grease. Slide shrink disc onto hub. Then slide unit (shrink disc/hub) onto shaft and position correctly. Gently tighten clamping screws one after the other by hand. Then use a torque wrench to tighten the clamping screws crosswise in several increments to the defined tightening torque MS.
1st increment approx. 33% MS
2nd increment approx. 66% MS
3rd increment 100% MS

Dismantling: Gradually loosen all screws one after the other but do not fully remove from the thread. The shrinking disc usually loosens itself.

Order No.	D	D1	DW	B	L	L1	Max. torque M Nm with tightening torque MS	Max. axial force F kN with tightening torque MS	Surface pressure on hub P N/mm²	No. of screws	Tightening torque MS Nm
23380-01-2450	24	50	19/20/21	25	21	15	220/272/325	32/35/37	357	6 x M5	5
23380-01-3060	30	60	24/25/26	27	23	18	390/435/465	38/41/43	292	7 x M5	5
23380-01-3672	36	72	28/30/31	29	25	19	442/575/633	50/58/58	307	5 x M6	12
23380-01-3872	38	72	29/30/31	31	27	21	660/720/750	62/65/64	340	6 x M6	12
23380-01-4072	40	72	30/31/32	31	27	21	625/634/695	60/60/61	305	6 x M6	12
23380-01-4480	44	80	32/35/36	30	28	22	740/940/1010	62/72/75	283	7 x M6	12
23380-01-4880	48	80	36/38/40	33	30	22	730/930/1100	66/72/78	260	7 x M6	12
23380-01-5090	50	90	38/40/42	34	30	22	1275/1430/1635	89/96/103	320	9 x M6	12
23380-01-55100	55	100	42/45/48	35	31	23	1170/1500/1870	79/88/97	250	8 x M6	12
23380-01-62110	62	110	48/50/52	36	32	23	2220/2600/2900	125/132/135	330	12 x M6	12
23380-01-68115	68	115	50/55/60	37	33	23	2010/2505/3140	97/106/120	260	10 x M6	12
23380-01-75138	75	138	55/60/65	39	33	25	2515/3195/3940	119/137/155	270	7 x M8	30
23380-01-80145	80	145	60/65/70	39	33	25	3180/3900/4620	124/140/158	260	7 x M8	30

Notes

Shrink discs Form B

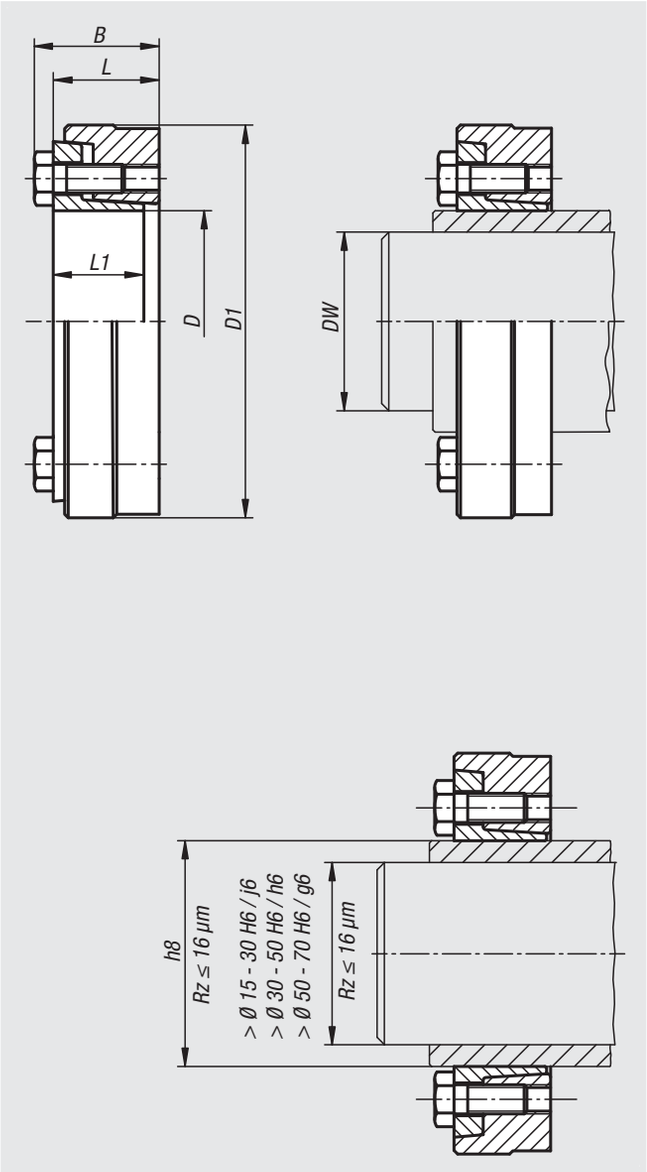

Material:
Steel.

Version:
Bright.

Sample order:
nlm 23382-1844

Note:
Shrink disc to connect a hollow hub to a shaft. They are mounted on the OD of the hub and generate pressure on the hub wall by reducing the ID with wedge-formed rings, creating a press fit between the hub and shaft. They are suitable for static, dynamic and shock loads.

- for extremely high torques
- no axial shaft/hub offset when assembling
- self-centring

Assembly:
Remove existing transportation locks. Clean and lightly oil shaft, internal and external hub diameters. Do not use MoS2 or grease. Slide shrink disc onto hub. Then slide unit (shrink disc/hub) onto shaft and position correctly. Gently tighten clamping screws one after the other by hand. Then use a torque wrench to tighten the clamping screws crosswise in several increments to the defined tightening torque MS.
1st increment approx. 33% MS
2nd increment approx. 66% MS
3rd increment 100% MS

Dismantling: Gradually loosen all screws one after the other but do not fully remove from the thread. The shrinking disc usually loosens itself.

Shrink discs Form B

Order No.	D	D1	DW	B	L	L1	Max. torque M Nm with tightening torque MS	Max. axial force F kN with tightening torque MS	Surface pressure on hub P N/mm²	No. of screws	Tightening torque MS Nm
23382-1844	18	44	15	19	15	13	80	11	389	4 x M6	12
			16				110	14			
23382-2047	20	47	17	19,3	15,3	13,5	150	18	342	4 x M6	12
			18				180	20			
23382-2450	24	50	19	22	18	15	160	17	329	5 x M6	12
			20				210	20			
			22				280	25			
23382-3060	30	60	24	24	20	17	270	23	341	6 x M6	12
			25				320	25			
			26				360	28			
23382-3672	36	72	27	27,5	22	18,5	510	37	483	5 x M8	35
			30				710	47			
			33				950	58			
23382-3872	38	72	27	27,5	22	18,5	480	36	460	5 x M8	35
			30				650	43			
			33				860	52			
23382-4080	40	80	34	29,5	24	20,5	810	48	339	6 x M8	35
			35				880	50			
			37				960	52			
23382-4480	44	80	35	29,5	24	20,5	800	52	341	6 x M8	35
			36				890	57			
			37				1050	60			
23382-5090	50	90	38	31,5	26	22	1500	79	386	8 x M8	35
			40				1700	87			
			42				2000	94			
23382-55100	55	100	42	34,5	29	25	1600	78	360	8 x M8	35
			45				2000	88			
			48				2400	99			
23382-60110	60	110	48	34,5	29	24,5	2200	92	316	9 x M8	35
			50				2500	98			
			52				2700	105			
23382-62110	62	110	48	34,5	29	24,5	2200	92	318	9 x M8	35
			50				2500	98			
			52				2700	105			
23382-68115	68	115	50	34,5	29	24,5	2400	94	329	9 x M8	35
			55				3000	111			
			60				3800	128			
23382-75138	75	138	55	37,5	31	26,3	3700	135	424	10 x M10	70
			60				4700	156			
			65				5800	177			
23382-80141	80	141	60	37,5	31	26	4200	141	399	10 x M10	70
			65				5200	160			
			70				6300	180			

Calculating the minimum hub diameter

The required minimum hub diameter depends on the hub form, the hub cross section and the yield point of the hub material. The formulas and values listed here are used to roughly estimate the minimum hub diameter. If the hub is weakened by boreholes, then the required outer diameter of the hub should be increased by the respective diameter of the drill hole.

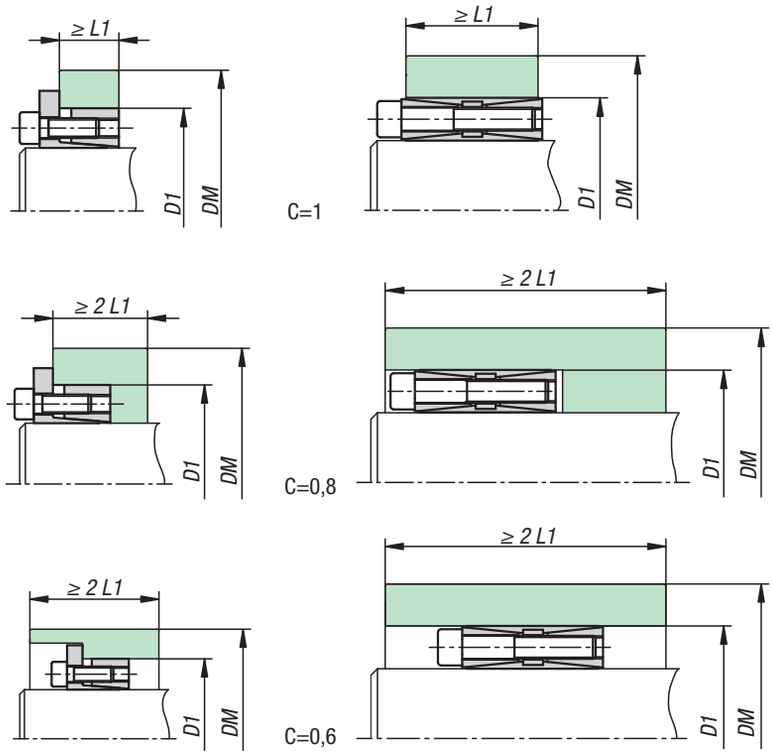

To calculate the minimum hub diameter, the following formula applies:

DM ≥ D1 • K

D1 = outer diameter of KLC (mm)

K = factor (see table)

If factor K is not specified in the table, then the following formula applies:

$$K = \sqrt{\frac{\sigma_{0,2} + (C \cdot PN)}{\sigma_{0,2} - (C \cdot PN)}} \text{ (mm)}$$

$\sigma_{0.2}$ = yield point of the hub material (N/mm²)

C = factor for hub form

PN = surface pressure on hub (N/mm²)

Sample calculation:

shaft diameter D=40 mm

hub material GGG40

yield point $\sigma_{0.2}$ = 250 N/mm²

Selected KLC:

23360-4090 KLC Form G

with D = 40 mm, D1 = 90 mm and PN = 139 N/mm²

hub width and form corrospond to C = 1

factor K from table = 1.88 (approximate value from table PN = 140 N/mm² with C = 1)

DM = 90 mm • 1.88 = **169.2 mm**

For connections with hollow hubs, the required internal diameter of the hub is calculated with the following formula:

$$DW_{int} < \underline{D} \cdot \sqrt{\frac{\sigma_{0,2\,shaft} - 2 \cdot PW \cdot 0,8)}{\sigma_{0,2\,shaft}}} \text{ (mm)}$$

$DW_{internal}$ = hollow hub ID (mm)

D = ID of KLC (mm)

$\sigma_{0.2\,shaft}$ = yield point of hub material (N/mm²)

PW = surface pressure on shaft (N/mm²)

Calculating the minimum hub diameter

Table for factor K												
		σ 0.2 yield point N/mm²										
		150	180	200	220	250	270	300	350	400	450	600
		hub materials										
PN N/mm²	Hub form C	GG20	GG25 GS38	GG30 GTS35	GS45 St 37-2	GGG40 GS52	St 50-2 C35	GGG50 GS60 St 60-2	GGG60 GS62 St 70-2	GGG70 GS70 C60		
60	C = 0,6	128	125	120	118	115	114	112	110	109	108	106
	C = 0,8	139	130	124	123	122	120	118	115	112	111	108
	C = 1	152	142	136	132	128	125	122	118	116	114	110
65	C = 0,6	130	125	122	120	118	115	113	111	110	109	107
	C = 0,8	144	135	130	128	124	122	120	116	114	112	109
	C = 1	160	145	140	135	130	128	124	120	118	116	112
70	C = 0,6	134	126	124	122	118	116	115	112	111	110	107
	C = 0,8	148	138	134	130	125	123	120	118	115	113	110
	C = 1	165	150	145	140	134	130	126	122	120	117	113
75	C = 0,6	130	128	125	123	120	118	116	114	112	111	108
	C = 0,8	152	142	136	132	128	125	122	118	116	114	111
	C = 1	174	155	148	142	136	133	130	125	120	118	113
80	C = 0,6	139	131	128	125	121	120	118	115	113	111	108
	C = 0,8	158	145	139	135	130	127	124	120	118	115	111
	C = 1	181	161	153	146	139	136	131	126	122	120	114
85	C = 0,6	142	134	130	127	123	121	119	116	114	112	109
	C = 0,8	163	149	142	138	132	129	126	122	119	116	112
	C = 1	190	167	157	150	142	139	134	128	124	121	115
90	C = 0,6	146	136	132	128	125	122	120	117	115	113	109
	C = 0,8	169	153	146	140	134	131	128	123	120	118	113
	C = 1	200	173	162	154	146	141	136	130	126	122	116
95	C = 0,6	149	139	134	130	126	124	121	118	115	114	110
	C = 0,8	175	157	149	143	137	134	130	125	121	119	114
	C = 1	211	180	168	159	149	144	139	132	127	124	117
100	C = 0,6	153	141	136	132	128	125	122	119	116	114	111
	C = 0,8	181	161	153	146	139	136	131	126	122	120	114
	C = 1	224	187	173	163	153	148	141	134	129	125	118
105	C = 0,6	156	144	139	134	129	127	124	120	117	115	111
	C = 0,8	188	166	156	150	142	138	133	128	124	121	115
	C = 1	238	195	179	168	156	151	144	136	131	127	119
110	C = 0,6	160	147	141	136	131	128	125	121	118	116	112
	C = 0,8	196	171	160	153	144	141	135	129	125	122	116
	C = 1	255	204	186	173	160	154	147	138	133	128	120
115	C = 0,6	164	150	143	136	133	130	126	122	119	117	112
	C = 0,8	204	176	164	156	147	143	137	131	126	123	117
	C = 1	275	213	193	179	164	158	150	141	134	130	121
120	C = 0,6	169	153	146	140	134	131	128	123	120	118	113
	C = 0,8	213	181	169	160	150	145	139	133	128	124	118
	C = 1	300	224	200	184	169	161	153	143	136	131	122
125	C = 0,6	173	156	148	143	136	133	129	124	121	118	113
	C = 0,8	224	187	173	163	153	148	141	134	129	125	118
	C = 1	332	235	208	191	173	165	156	145	138	133	124
130	C = 0,6	178	159	151	145	138	135	130	125	122	119	114
	C = 0,8	235	193	178	167	156	150	144	136	130	127	119
	C = 1	374	249	217	197	178	169	159	148	140	135	125
135	C = 0,6	183	162	154	147	140	136	132	127	123	120	115
	C = 0,8	248	200	183	171	159	153	146	138	132	128	120
	C = 1	436	265	227	204	183	173	162	150	142	136	126
140	C = 0,6	188	166	156	150	142	138	133	128	124	121	115
	C = 0,8	263	207	188	175	162	155	148	139	133	129	121
	C = 1	539	283	238	212	188	178	166	153	144	138	127
145	C = 0,6	194	169	159	152	144	140	135	129	125	122	116
	C = 0,8	280	215	194	180	165	158	150	141	135	130	122
	C = 1	768	305	250	221	194	182	169	155	146	140	128
150	C = 0,6	200	173	162	154	146	141	136	130	126	123	116
	C = 0,8	300	224	200	184	169	161	153	143	136	131	123
	C = 1	-	332	265	230	200	187	173	158	148	141	129
155	C = 0,6	206	177	165	157	148	143	138	131	127	124	117
	C = 0,8	325	233	206	189	172	165	155	145	138	133	123
	C = 1	-	366	280	240	206	192	177	161	151	143	130
160	C = 0,6	213	181	169	160	150	145	139	133	128	124	118
	C = 0,8	355	243	213	194	176	167	158	147	139	134	124
	C = 1	-	412	300	252	213	198	181	164	153	145	131
165	C = 0,6	221	186	172	162	152	147	141	134	129	125	118
	C = 0,8	396	255	221	200	180	171	160	149	141	135	125
	C = 1	-	480	323	265	221	204	186	167	155	147	133

Universal joints: mounting and maintenance

Universal joints:
Universal joints are used for mechanical power transmission at high speeds. The speed limit is dependent on the working angle. The widest working angle is 45° for all joint types (90° for double joint). Lower speeds should be used at angles over 20° (40° for double joint). Standard universal joints can be used up to 2000 rpm and joints with needle bearings up to 4000 rpm. Needle bearing mounted joints are normally only used at speeds over 1000 rpm.

Movement progression
Single joints transfer uniform induced movement irregularly because by one revolution of the driving shaft, the driven shaft is accelerated twice and retarded twice. The degree of irregularity depends on the working angle (see Figures 1 and 2).

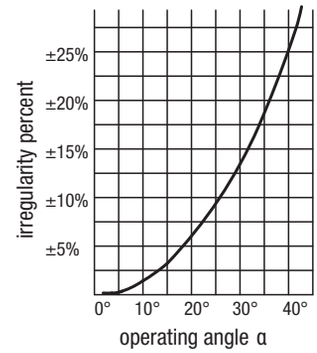

Fig 1

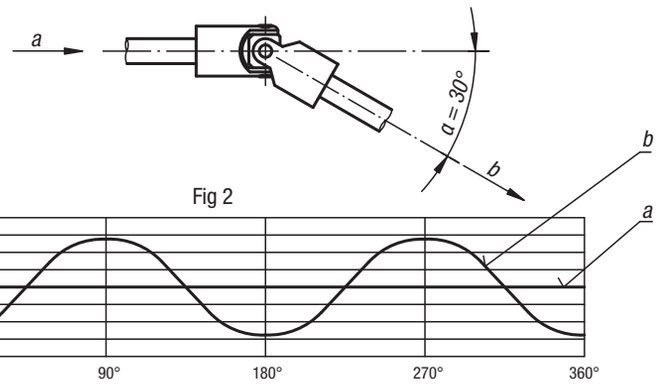

Fig 2

To achieve uniform movement 2 single or one double joint must be used. Where slight irregularities in rotation can be accepted or only small angles of diffraction are concerned, a single joint may be used. Furthermore, for universal rotation transfer the diffraction angle at both ends of the intermediate shaft must be the same (Figures 3 and 4).

Note:
It should be ensured that the bearing is located as closely as possible to the joint.

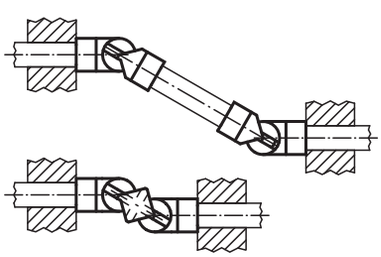

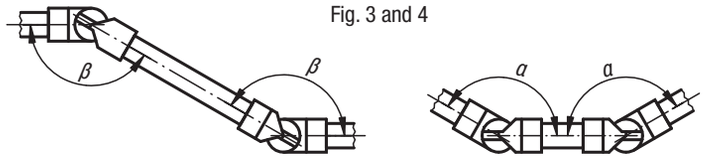

Fig. 3 and 4

Maintenance
The joints should be lubricated at least once per day where they are in uninterrupted use. In dirty conditions we recommend covering the joints with a protective rubber sheath.

Where mounting is questionable, please consult our technical sales staff.

Universal joints single

with plain bearing, DIN 808

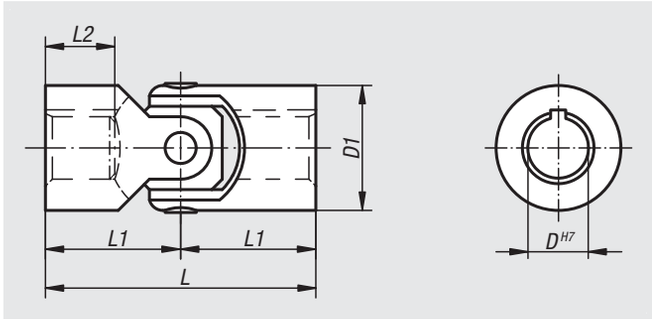

Material:
Steel.

Version:
Joint and bearing hardened

Sample order:
nlm 23403-06034

Note:
Universal joints with plain bearing can be swivelled by 45°.

Max. transferable torque (Nm) at 150 rpm, operation angle α < 5°.

* Bore depth is less than by DIN 808.

On request:

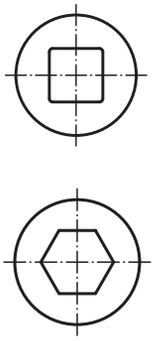

DIN 6885-1

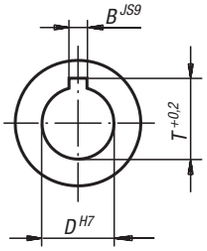

Order No. reamed hole without slot	Order No. reamed hole with slot	D	D1	L	L1	L2	B	T	Max. torque Nm	static fracture torque Nm
23403-06034	-	6	16	34	17	9*	2	7	7	40
23403-08040	**23403-108040**	8	16	40	20	11*	2	9	7	40
23403-10048	**23403-110048**	10	20	48	24	12*	3	11,4	16	90
23403-12056	**23403-112056**	12	25	56	28	14*	4	13,8	26	150
23403-16068	**23403-116068**	16	32	68	34	16*	5	18,3	52	300
23403-20082	**23403-120082**	20	40	82	41	20*	6	22,8	100	650
23403-25104	**23403-125104**	25	50	104	52	25*	8	28,3	210	1200

Universal joints double

with plain bearing, DIN 808

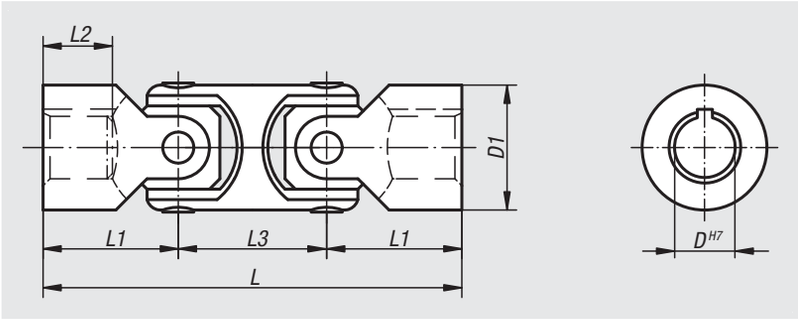

Material:
Steel.

Version:
Joint and bearing hardened

Sample order:
nlm 23404-06056

Note:
Double universal joints with plain bearing can be swivelled by 90°.

Max. transferable torque (Nm) at 150 rpm, operation angle α < 5°.

* Bore depth is less than by DIN 808.

On request:

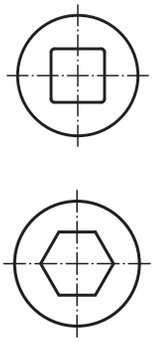

DIN 6885-1

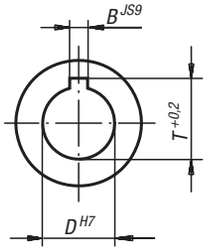

Order No. reamed hole without slot	Order No. reamed hole with slot	D	D1	L	L1	L2	L3	B	T	Max. torque Nm	static fracture torque Nm
23404-06056	-	6	16	56	17	9*	22	2	7	7	40
23404-08062	**23404-108062**	8	16	62	20	11*	22	2	9	7	40
23404-10074	**23404-110074**	10	20	74	24	12*	26	3	11,4	16	90
23404-12086	**23404-112086**	12	25	86	28	14*	30	4	13,8	26	150
23404-16104	**23404-116104**	16	32	104	34	16*	37	5	18,3	52	300
23404-20128	**23404-120128**	20	40	128	41	20*	47	6	22,8	100	650
23404-25160	**23404-125160**	25	50	160	52	25*	56	8	28,3	210	1200

Universal joints single

with needle bearing, DIN 808

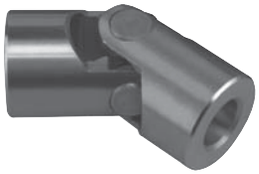

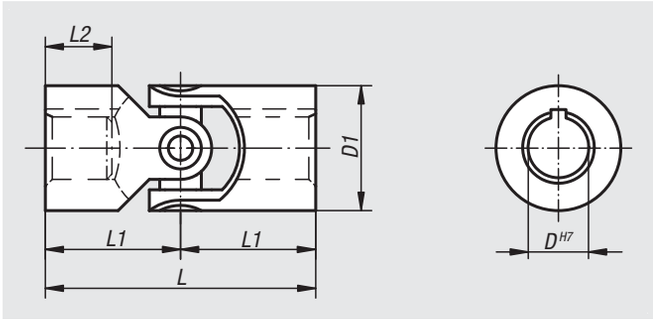

Material:
Steel.

Version:
Joint ground, bright.

Sample order:
nlm 23406-10048

Note:
Single universal joints with needle bearings are used for speeds of 1000 to 4000 rpm. They have minimal play and are maintenance-free.

Max. transferable torque (Nm) at 150 rpm, operation angle α < 5°.

* Bore depth is less than by DIN 808.

On request:

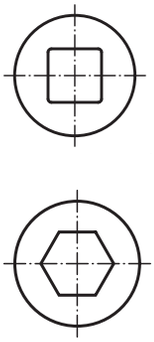

DIN 6885-1

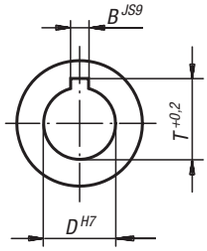

Order No. reamed hole without slot	Order No. reamed hole with slot	D	D1	L	L1	L2	B	T	Max. torque Nm	static fracture torque Nm
23406-10048	**23406-110048**	10	20	48	24	12*	3	11,4	10	80
23406-12056	**23406-112056**	12	25	56	28	14*	4	13,8	16	120
23406-16068	**23406-116068**	16	32	68	34	16*	5	18,3	35	250
23406-20082	**23406-120082**	20	40	82	41	20*	6	22,8	80	500
23406-25104	**23406-125104**	25	50	104	52	25*	8	28,3	130	800
23406-30166	**23406-130166**	30	63	166	83	38*	8	33,3	240	1500
23406-35140	**23406-135140**	35	70	140	70	35*	10	38,3	360	2200

Universal joints double

with needle bearing, DIN 808

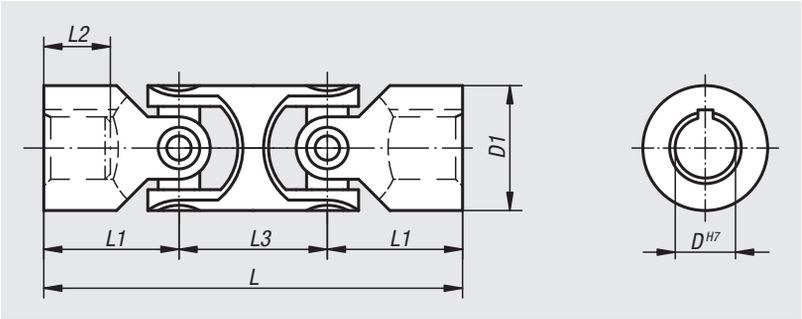

Material:
Steel.

Version:
Joint ground, bright.

Sample order:
nlm 23407-12086

Note:
Double universal joints with needle bearing are used for speeds of 1000 to 4000 rpm. They have minimal play and are maintenance-free.

Max. transferable torque (Nm) at 150 rpm, operation angle α < 5°.

* Bore depth is less than by DIN 808.

On request:

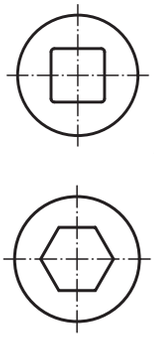

DIN 6885-1

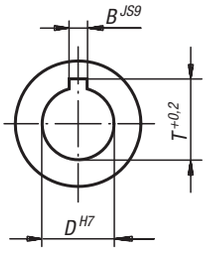

Order No. reamed hole without slot	Order No. reamed hole with slot	D	D1	L	L1	L2	L3	B	T	Max. torque Nm	static fracture torque Nm
23407-10074	**23407-110074**	10	20	74	24	12*	26	3	11,4	10	80
23407-12086	**23407-112086**	12	25	86	28	14*	30	4	13,8	16	120
23407-16104	**23407-116104**	16	32	104	34	16*	37	5	18,3	35	250
23407-20128	**23407-120128**	20	40	128	41	20*	47	6	22,8	80	500
23407-25160	**23407-125160**	25	50	160	52	25*	56	8	28,3	130	800
23407-30238	**23407-130238**	30	63	238	83	38*	72	8	33,3	240	1500
23407-35212	**23407-135212**	35	70	212	70	35*	72	10	38,3	360	2200

Universal joints single

with plain bearing, robust version DIN 808

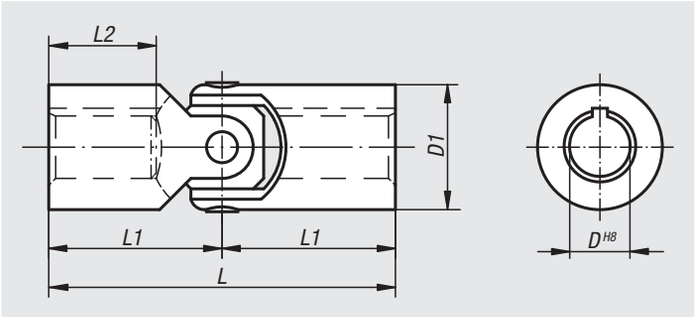

Material:
Steel.

Version:
Bright.

Sample order:
nlm 23409-08042

Note:
Robust universal joints are suitable for manual drives on elevating platforms, slides, shutters etc. or for short-time machine drives at low speed.
Single universal joints with plain bearing can be swivelled by 35°.

Max. transferable torque (Nm) at 150 rpm, operation angle α < 5°.

On request:

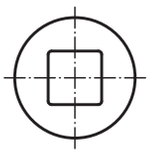

DIN 6885-1

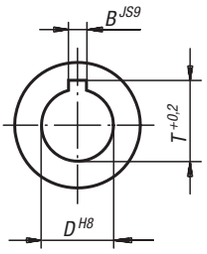

Order No. reamed hole without slot	Order No. reamed hole with slot	D	D1	L	L1	L2	B	T	Max. torque Nm	static fracture torque Nm
23409-08042	**23409-108042**	8	13	42	21	11	2	9	4	25
23409-10052	**23409-110052**	10	16	52	26	15	3	11,4	6	35
23409-12062	**23409-112062**	12	20	62	31	18	4	13,8	13	80
23409-16074	**23409-116074**	16	25	74	37	22	5	18,3	23	140
23409-20086	**23409-120086**	20	32	86	43	25	6	22,8	46	280
23409-25108	**23409-125108**	25	40	108	54	32	8	28,3	90	600
23409-32132	**23409-132132**	32	50	132	66	40	10	35,3	180	1100

Universal joints double

with plain bearing, robust version DIN 808

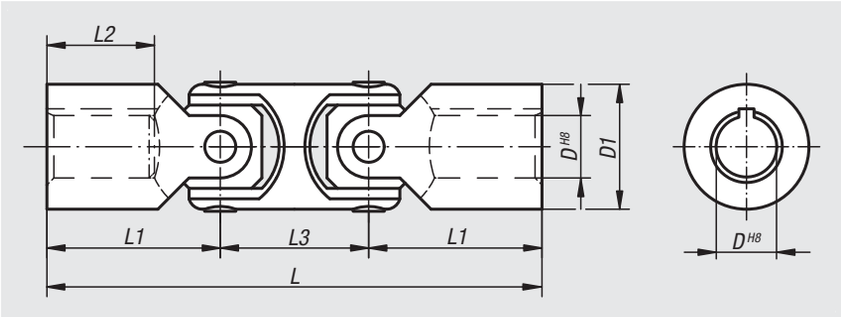

Material:
Steel.

Version:
Bright.

Sample order:
nlm 23410-10074

Note:
Robust universal joints are suitable for manual drives of elevating platforms, slides, shutters etc. or for short-time machine drives at low speed.
Double universal joints with plain bearing can be swivelled by 70°.

Max. transferable torque (Nm) at 150 rpm, operation angle α < 5°.

On request:

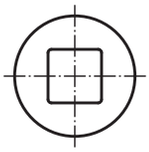

DIN 6885-1

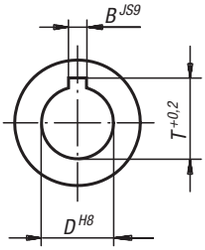

Order No. reamed hole without slot	Order No. reamed hole with slot	D	D1	L	L1	L2	L3	B	T	Max. torque Nm	static fracture torque Nm
23410-08060	**23410-108060**	8	13	60	21	11	18	2	9	4	25
23410-10074	**23410-110074**	10	16	74	26	15	22	3	11,4	6	35
23410-12088	**23410-112088**	12	20	88	31	18	26	4	13,8	13	80
23410-16104	**23410-116104**	16	25	104	37	22	30	5	18,3	23	140
23410-20124	**23410-120124**	20	32	124	43	25	37	6	22,8	46	280
23410-25156	**23410-125156**	25	40	156	54	32	47	8	28,3	90	600
23410-32188	**23410-132188**	32	50	188	66	40	56	10	35,3	180	1100

Cardan shafts telescopic

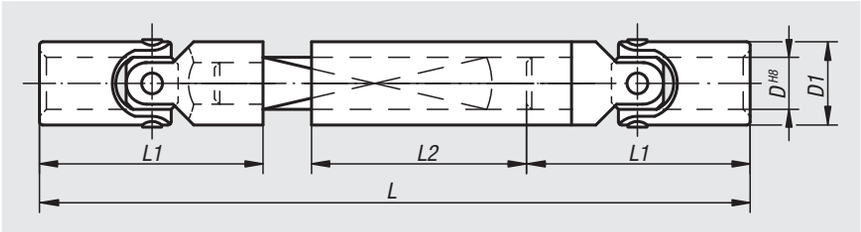

Material:
Steel.

Version:
Bright.

Sample order:
nlm 23412-120260

Note:
These cardan shafts consist of two robust universal joints, one square shaft and a sliding sleeve. They are available in any desired length on request. Telescopic cardan shafts are suitable for manual drives or short-term machine drives at low speed.

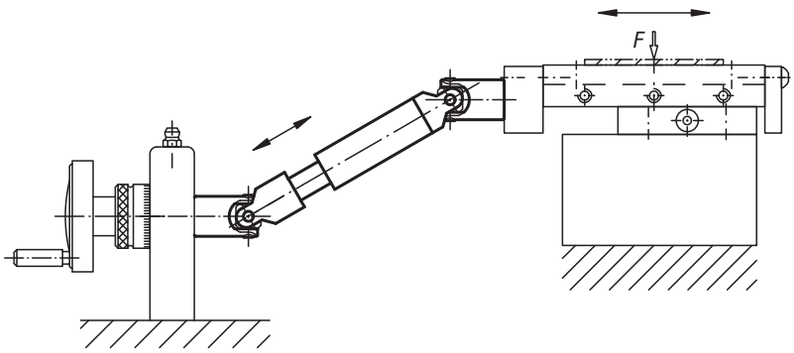

Order No.	D	D1	L	L1	L2	Retractability	Shaft profile square	static fracture torque in Nm
23412-100230	10	16	230	52	120	80	8	35
23412-120260	12	20	260	62	130	90	10	80
23412-160340	16	25	340	74	160	110	12	140
23412-200420	20	32	420	86	200	130	16	280

23414

Protective rubber sleeves

for universal and cardan joints (single)

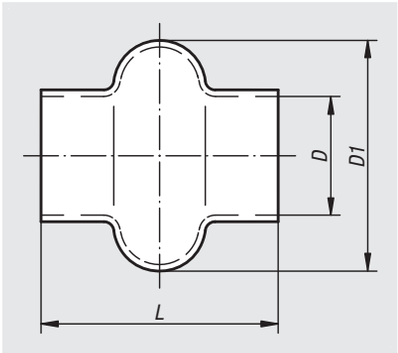

Sample order:
nlm 23414-16

Note:
These rubber sleeves fit over single joints from OD 16 mm. They are made of an elastic, oil-resistant plastic and are produced by a dipping method.
The No. 23414-50 is supplied with 4x bellows.
By diameter D, D1 can shrink by up to 10%. The length L can vary by ±5%.

Order No.	D	D1	L	Suitable for single joints of shaft Ø (D1)
23414-16	16	34,5	34	16
23414-20	18	35	44	20
23414-24	23	44	56	24
23414-28	28	49	66	28
23414-32	32	56	63	32
23414-36	35	64	65	36
23414-40	38	64,5	74	40
23414-45	41	69	78	45
23414-50	50	85	100	50
23414-65	65	109	132	63
23414-70	70	119	144	70

23415

Protective rubber sleeves

for universal and cardan joints (double)

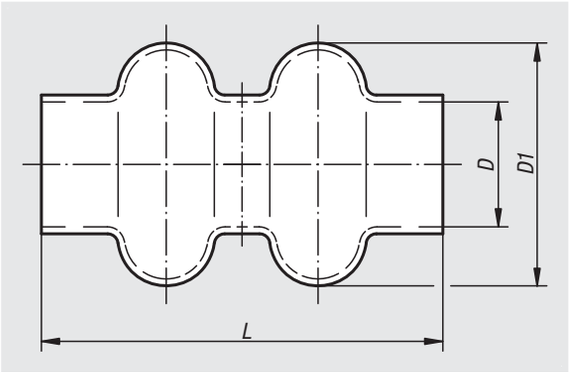

Sample order:
nlm 23415-16

Note:
These rubber sleeves fit over double joints from OD 16 mm. They are made of an elastic, oil-resistant plastic and are produced by a dipping method.
By diameter D, D1 can shrink by up to 10%. The length L can vary by ±5%.

Order No.	D	D1	L	Suitable for double joints of shaft Ø (D1)
23415-16	16	33	55	16
23415-20	20	34	66	20
23415-24	22,5	42	81	24
23415-28	26,5	49	93	28
23415-32	30,5	59	105,5	32
23415-40	38	72	131	40
23415-50	48	88	163	50

Notes

Quick-fit couplings

with radial offset compensation

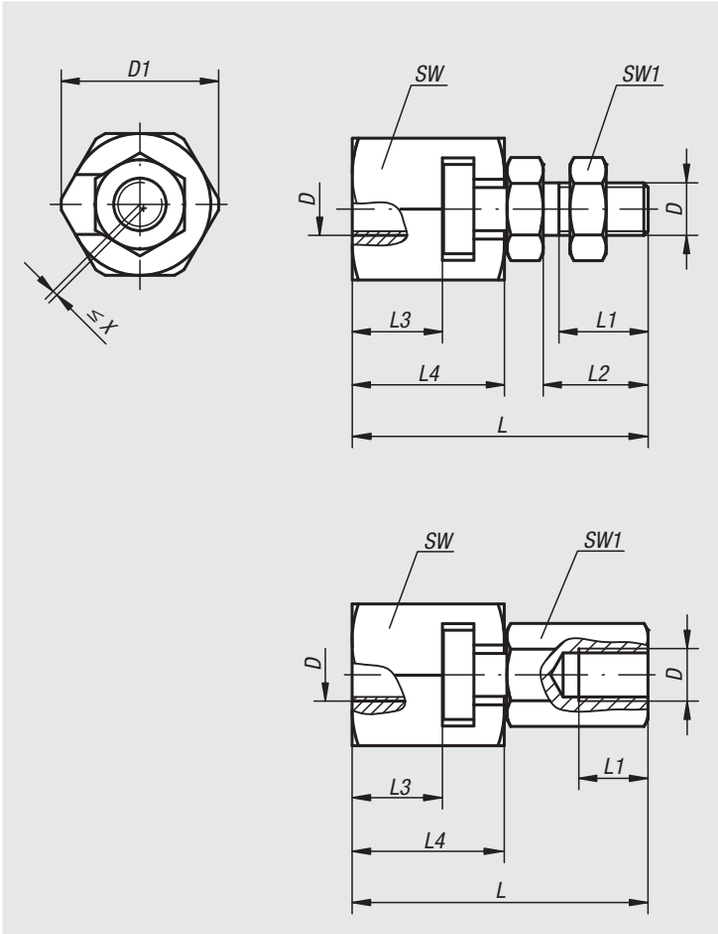

Material:
Coupling part and claw in steel.
Nut (DIN 439) in steel, grade 8.8.

Version:
Coupling part and claw tempered and phosphated.
Nut steel, black oxidised.

Sample order:
nlm 23450-16

Note:
Quick-fit couplings with radial offset compensation for multiple applications, e.g. as a link between a piston rod and a linear-movement unit. Assembly and disassembly of this simple, solid and two-part coupling is carried out by means of a T-slot; a manual re-adjustment is not necessary. The quick-fit coupling can be linked to all commonly used pneumatic and hydraulic cylinders via the connecting thread.

The quick-fit coupling does not transmit any torque.

Quick-fit couplings

with radial offset compensation

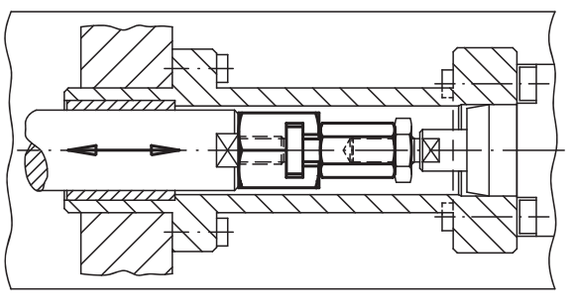

Order No.	Version	D	D1	L	L1 min.	L2	L3 min.	L4	SW	SW1	radial offset compensation X max.	Max. permissible tensile and compressive stress kN
23450-06	internal thread	M6	21	37,5	11	-	9	18	19	10	0,6	2,5
23450-08	internal thread	M8	26	45	13,5	-	11,5	22,5	24	13	0,7	4,5
23450-10	internal thread	M10	30	56,2	15	-	16	29	27	17	0,7	6,5
23450-101	internal thread	M10x1,25	30	56,2	15	-	16	29	27	17	0,7	6,5
23450-12	internal thread	M12	32,5	66,7	17,5	-	17	34	30	19	0,8	10
23450-121	internal thread	M12x1,25	32,5	66,7	17,5	-	17	34	30	19	0,8	10
23450-16	internal thread	M16	39	83	22	-	23	42	36	24	1	18
23450-161	internal thread	M16x1,5	39	83	22	-	23	42	36	24	1	18
23450-20	internal thread	M20	44	93,5	25	-	23,5	45,5	41	30	1	30
23450-201	internal thread	M20x1,5	44	93,5	25	-	23,5	45,5	41	30	1	30
23450-0614	external thread	M6	21	37,5	11	14	9	18	19	10	0,6	2,5
23450-0817	external thread	M8	26	45	13,5	17	11,5	22,5	24	13	0,7	4,5
23450-1020	external thread	M10	30	56,2	16	20	16	29	27	17	0,7	6,5
23450-10201	external thread	M10x1,25	30	56,2	16	20	16	29	27	17	0,7	6,5
23450-1225	external thread	M12	32,5	66,7	21	25	17	34	30	19	0,8	10
23450-12251	external thread	M12x1,25	32,5	66,7	21	25	17	34	30	19	0,8	10
23450-1630	external thread	M16	39	83	25	30	23	42	36	24	1	18
23450-16301	external thread	M16x1,5	39	83	25	30	23	42	36	24	1	18
23450-2035	external thread	M20	44	93,5	29	35	23,5	45,5	41	30	1	30
23450-20351	external thread	M20x1,5	44	93,5	29	35	23,5	45,5	41	30	1	30

Quick-fit couplings

with radial offset compensation and mounting flange

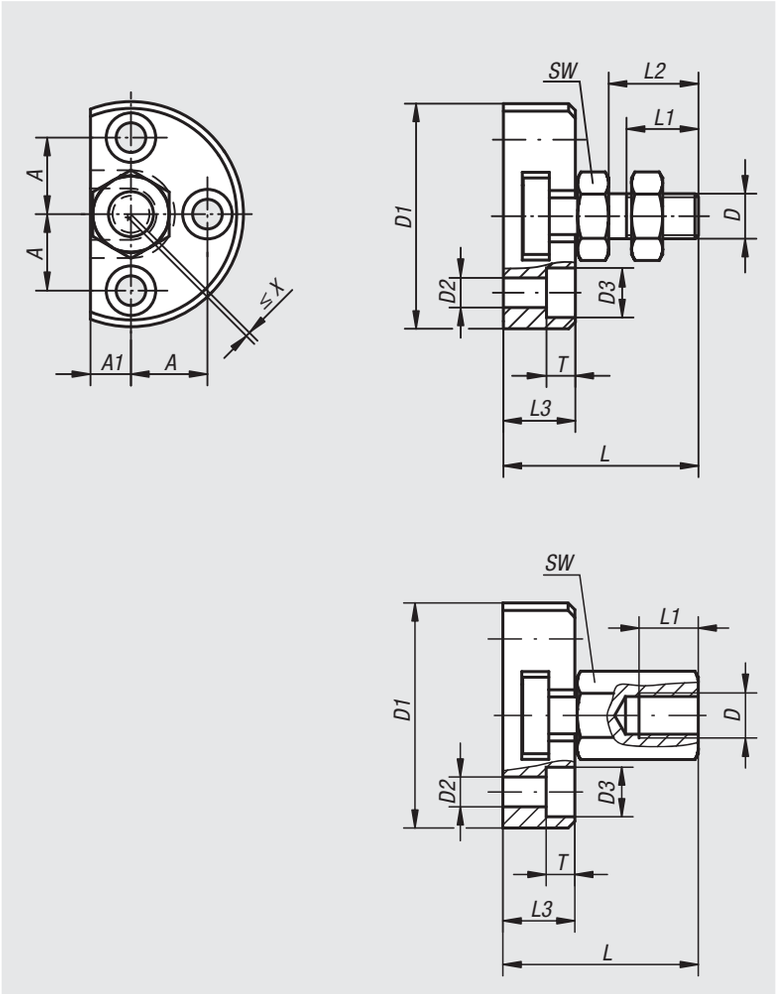

Material:
Coupling part and steel flange.
Nut (DIN 439), grade 8.8.

Version:
Coupling part and flange tempered and phosphated.
Nut black oxidised.

Sample order:
nlm 23452-20351

Note:
Space saving quick-fit couplings with radial offset compensation suitable for multiple applications, e.g. as a link between a piston rod and a linear-movement unit. Assembly and disassembly of this simple, solid and two-part coupling is with a T-slot, a manual re-adjustment is not necessary. The quick-fit coupling can be linked to all commonly used pneumatic and hydraulic lifting cylinders via the connecting thread.

The quick-fit coupling does not transmit any torque.

Quick-fit couplings

with radial offset compensation and mounting flange

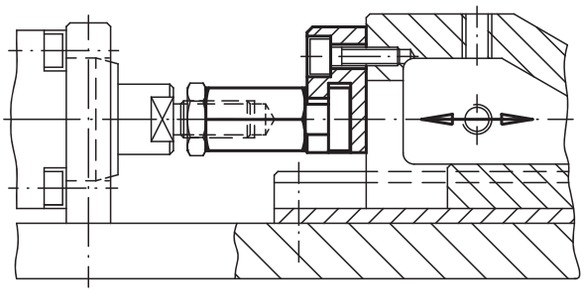

Order No.	Version	D	D1	D2	D3	A	A1	L	L1 min.	L2	L3	T	SW	radial offset compensation X max.	Max. permissible tensile and compressive stress kN
23452-06	internal thread	M6	42	5,5	10	14	7	30,5	11	-	11	5,4	10	0,6	2,5
23452-08	internal thread	M8	48	6,6	11	16	8	35,5	13,5	-	13	6,4	13	0,7	4,5
23452-10	internal thread	M10	50	6,6	11	17	9	43,2	15	-	16	6,4	17	0,7	6,5
23452-101	internal thread	M10x1,25	50	6,6	11	17	9	43,2	15	-	16	6,4	17	0,7	6,5
23452-12	internal thread	M12	55	6,6	11	19	10	53,2	17,5	-	20,5	6,4	19	0,8	10
23452-121	internal thread	M12x1,25	55	6,6	11	19	10	53,2	17,5	-	20,5	6,4	19	0,8	10
23452-16	internal thread	M16	65	9	15	22,5	12,5	64	22	-	23	8,5	24	1	18
23452-161	internal thread	M16x1,5	65	9	15	22,5	12,5	64	22	-	23	8,5	24	1	18
23452-20	internal thread	M20	80	11	18	28	17	74	25	-	26	10	30	1	30
23452-201	internal thread	M20x1,5	80	11	18	28	17	74	25	-	26	10	30	1	30
23452-0614	external thread	M6	42	5,5	10	14	7	30,5	11	14	11	5,4	10	0,6	2,5
23452-0817	external thread	M8	48	6,6	11	16	8	35,5	13,5	17	13	6,4	13	0,7	4,5
23452-1020	external thread	M10	50	6,6	11	17	9	43,2	16	20	16	6,4	17	0,7	6,5
23452-10201	external thread	M10x1,25	50	6,6	11	17	9	43,2	16	20	16	6,4	17	0,7	6,5
23452-1225	external thread	M12	55	6,6	11	19	10	53,2	21	25	20,5	6,4	19	0,8	10
23452-12251	external thread	M12x1,25	55	6,6	11	19	10	53,2	21	25	20,5	6,4	19	0,8	10
23452-1630	external thread	M16	65	9	15	22,5	12,5	64	25	30	23	8,5	24	1	18
23452-16301	external thread	M16x1,5	65	9	15	22,5	12,5	64	25	30	23	8,5	24	1	18
23452-2035	external thread	M20	80	11	18	28	17	74	29	35	26	10	30	1	30
23452-20351	external thread	M20x1,5	80	11	18	28	17	74	29	35	26	10	30	1	30

Quick-fit couplings

with angular and radial offset compensation

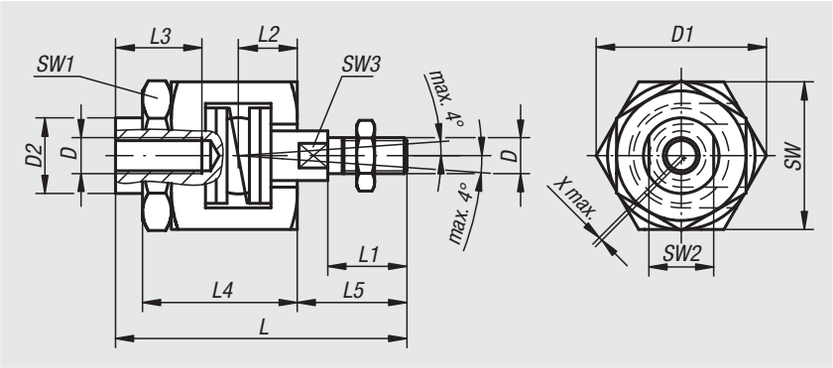

Material:
Coupling part carbon steel.
Claw and seat steel.
Nut carbon steel.
Locknut (EN 24035) grade 8.8 steel.
Spring stainless steel.

Version:
Coupling part nitrided, black.
Claw and seat tempered and phosphated.
Nut phosphated.
Locknut black.

Sample order:
nlm 23454-12

Note:
Quick-fit coupling, adjustable without axial play, including angular and radial offset compensation. Suitable for multiple applications, e.g. for non-aligned linear-movements. Solid and compact design, no loose elements. Assembly and disassembly with a T-slot; a manual re-adjustment is not necessary. The quick-fit coupling can be linked to all commonly used pneumatic and hydraulic lifting cylinders via the connecting thread.

The quick-fit coupling does not transmit any torque.

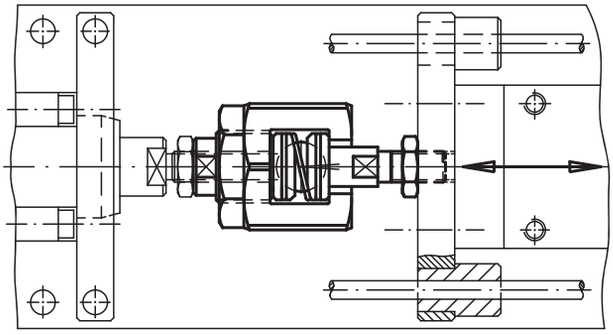

Order No.	D	D1	D2	L	L1	L2	L3 min.	L4	L5	SW	SW1	SW2	SW3	radial offset compensation X max.	Max. permissible tensile and compressive stress kN
23454-06	M6	24,5	9,6	52	14	9,5	13	29	18,5	22	19	8	5	0,6	2,5
23454-08	M8	30	15	63	18	11,5	16	33	23,5	27	24	13	7	0,6	4,5
23454-10	M10	44	21	81	22	16	24	43	30,5	41	36	18	12	0,7	6,5
23454-101	M10x1,25	44	21	81	22	16	24	43	30,5	41	36	18	12	0,7	6,5
23454-12	M12	44	21	85	26	16	24	43	34,5	41	36	18	12	0,7	10
23454-121	M12x1,25	44	21	85	26	16	24	43	34,5	41	36	18	12	0,7	10
23454-16	M16	60	32	121	34	26	34	62	45	55	46	27	18	1	18
23454-161	M16x1,5	60	32	121	34	26	34	62	45	55	46	27	18	1	18
23454-20	M20	60	32	129	42	26	34	62	53	55	46	27	18	1	30
23454-201	M20x1,5	60	32	129	42	26	34	62	53	55	46	27	18	1	30

igubal® pillow block bearings

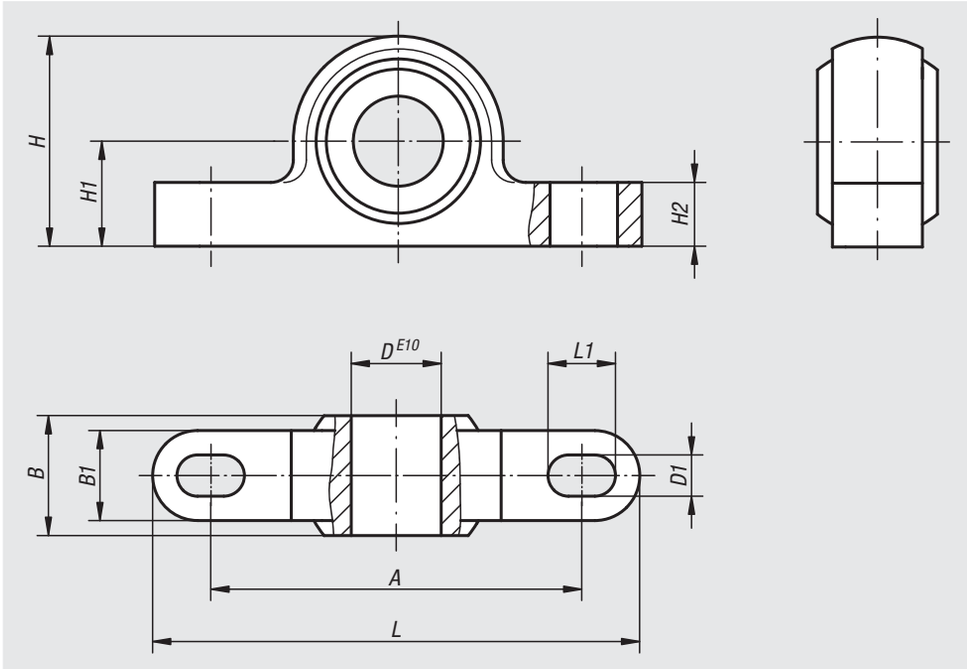

Material:
Housing igumid® G.
Swivel ball iglidur® W300

Version:
black.

Sample order:
nlm 23500-05

Note:
The ability to pivot allows pillow block bearings to compensate for misalignment and possible shaft deflection. They are easy to install and suitable for the accomodation of rotating, oscillating and linear movements.
igubal® pillow block bearings are maintenance free and conceived for dry running condition.

Assembly:
These pillow block bearings are designed for mounting with 2 screws.

The ID tolerance is E10. The matching shaft should have a tolerance of h6 to h9.

Order No.	A	B	B1	D	D1	H	H1	H2	L	L1	Max. swivel angle	Max. static tensile stress N short-term	Max. static tensile stress N long-term	Max. static axial pressure stress N	Max. tightening torque for oblong holes Nm
23500-05	26,7	8	6	5	3,3	14	7	4	34	5	30°	700	350	400	0,6
23500-06	34,5	9	7	6	4,5	18	10	5,5	43	6	29°	1100	550	400	1,3
23500-08	35,5	12	9	8	4,5	20	10	6	47	7	25°	1300	650	800	1,3
23500-10	48,5	14	10,5	10	5,5	26	14	7,5	62	8	25°	1500	750	1100	2,5
23500-12	49,5	16	12	12	5,5	28	14	8,5	65	9	25°	2200	1100	1150	2,5
23500-14	64,4	19	13,5	14	6,6	34	18	9,5	82	11	23°	2400	1200	1200	4,5
23500-16	65,4	21	15	16	6,6	36	18	10,5	86	12	23°	3000	1500	1800	4,5
23500-18	72	23	16,5	18	9	42	22	11,5	93	13	23°	3500	1750	1900	10,5
23500-20	73	25	18	20	9	44	22	13	98	14	23°	4700	2350	2500	10,5
23500-22	81	28	20	22	9	48	24	14	108	16	22°	6100	3050	2700	10,5
23500-25	94	31	22	25	9	54	27	16	124	17	22°	6600	3300	3200	10,5
23500-30	105	37	25	30	11	64	32	17	139	20	22°	8100	4050	3750	21,5

Guide bushes

bronze, maintenance-free

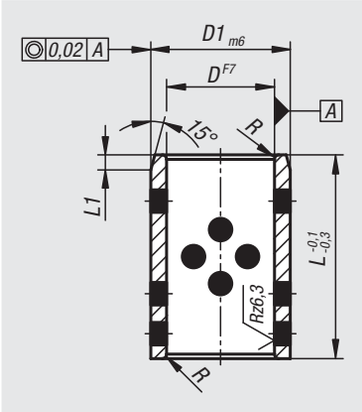

Material:
Bronze with graphite inserts.

Version:
Self-lubricating.
Hardness 190-220 HB.

Sample order:
nlm 23680-050065070

Note:
The guide bushes are radially and axially applicable.
The bearing elements are maintenance-free and wear-resistant.
The graphite inserts provide life-long lubrication.

Preferably for travel speeds < 0.5 m/s. (Additional lubrication is recommended for extreme loading with a higher travel speeds).

Temperature range:
Temporary temperature peaks up to ca. 200°C.

Tolerances:
The bore for the bearings should correspond to ISO tolerance H7.

The tolerance h6 to h7 is recommended for the shaft.

Technical data:
Material properties:
Base alloy: CuZn25Al6FeMn3
Density: 8.0 g/cm^3
Tensile strength Rm: 750 N/mm^2
Yield point: 450 N/mm^2
Ductile fracture A5: 5-8%
Friction coefficient: 0.05 - 0.12
Maximum speed: 15 m/min
Thermal conductivity: 50 W/m x k
Thermal expansion coefficient: 18 x 10^{-6}
Electrical conductivity: 7-8 m/(Ω x mm^2)
Solid lubricant content: 25-30 %

Order No.	D	D1	L	L1	R
23680-0080110**	8	11	14/15	1	1
23680-0080120**	8	12	8/10/12/15	1	1
23680-0100140**	10	14	8/10/12/15/20	1	1
23680-0100150**	10	15	10	1	1
23680-0120160**	12	16	10/12/20	1	1
23680-0120180**	12	18	10/12/15/16/20/25/30	1	1
23680-0130190**	13	19	10/16/20	2	1
23680-0140200**	14	20	10/12/15/20/25/30	2	1
23680-0150210**	15	21	10/12/15/20/25/30	2	1
23680-0160200**	16	20	16/20/25/28	2	1
23680-0160220**	16	22	10/12/15/16/20/25/30/35/40	2	1
23680-0180240**	18	24	12/15/16/18/20/25/30/35/40	2	1
23680-0190260**	19	26	15/20	2	1
23680-0200260**	20	26	15/20/25/30	3	1
23680-0200280**	20	28	10/12/15/16/20/25/30/35/40/50	2	1
23680-0200300**	20	30	16/20/25/30/35/40	2	1
23680-0220320**	22	32	12/15/20/25	3	2
23680-0250300**	25	30	20	3	2
23680-0250330**	25	33	12/16/20/25/30/35/40/50/60	3	2
23680-0250350**	25	35	12/16/20/25/30/35/40/50/60	3	2
23680-0300380**	30	38	15/20/25/30/35/40/45/50/60	3	2
23680-0300400**	30	40	20/25/30/35/40/50/60	3	2
23680-0300450**	30	45	40	3	2
23680-0310400**	31	40	30/40	3	2
23680-0320420**	32	42	30/40	3	2
23680-0350440**	35	44	25/35/40/50/60	3	2
23680-0350450**	35	45	20/25/30/35/40/45/50/60/100	3	2
23680-0380480**	38	48	30/40	3	2
23680-0400500**	40	50	20/25/30/35/40/50/60/80	3	2
23680-0400550**	40	55	25/30/35/40/50/60	3	2
23680-0450550**	45	55	30/35/40/50/60/110	3	2
23680-0450560**	45	56	30/35/40/50/60	3	2
23680-0450600**	45	60	30/40/50/60/70/80	3	2
23680-0500600**	50	60	30/35/40/50/60/70/80	3	2
23680-0500620**	50	62	30/35/40/50/60/70/80	3	2
23680-0500650**	50	65	30/40/50/60/70/80/100	3	2

Guide bushes

DIN 9834 / ISO 9448, bronze, maintenance-free with collar

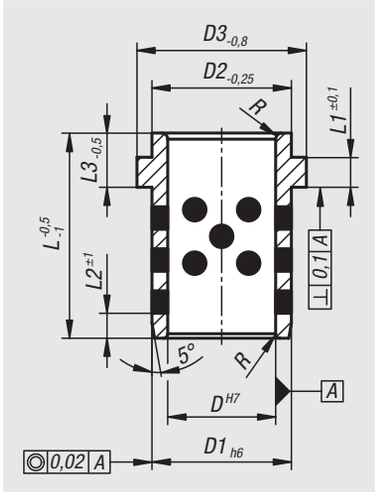

Material:
Bronze with graphite inserts.

Version:
Self-lubricating.
Hardness 190-220 HB.

Sample order:
nlm 23681-02403204000

Note:
The guide bushes are radially and axially applicable.
The bearing elements are maintenance-free and wear-resistant.
The graphite inserts provide life-long lubrication.

Preferably for travel speeds < 0.5 m/s. (Additional lubrication is recommended for extreme loading with a higher travel speeds).

Temperature range:
Temporary temperature peaks up to ca. 200°C.

Accessories:
Retaining clips.23682.

Tolerances:
The bore for the bearings should correspond to ISO tolerance H7.

The tolerance h6 to h7 is recommended for the shaft.

Technical data:
Material properties:
Base alloy: CuZn25Al6FeMn3
Density: 8.0 g/cm^3
Tensile strength Rm: 750 N/mm^2
Yield point: 450 N/mm^2
Ductile fracture A5: 5-8%
Friction coefficient: 0.05 - 0.12
Maximum speed: 15 m/min
Thermal conductivity: 50 W/m x k
Thermal expansion coefficient: 18 x 10^{-6}
Electrical conductivity: 7-8 m/(Ω x mm^2)
Solid lubricant content: 25-30 %

Order No.	D	D1	D2	D3	L	L1	L2	L3	R
23681-02403204000	24	32	32	40	40	6,3	3	-	3
23681-02503203200	25	32	32	40	32	6,3	4	-	3
23681-02503204010	25	32	32	40	40	6,3	3	10	3
23681-02503204000	25	32	32	40	40	6,3	4	-	3
23681-03204005012	32	40	40	50	50	6,3	4	12	3
23681-04005006315	40	50	50	63	63	6,3	5	15	3
23681-05006307117	50	63	63	71	71	6,3	6,3	17	5

Retaining clips,

DIN 9832

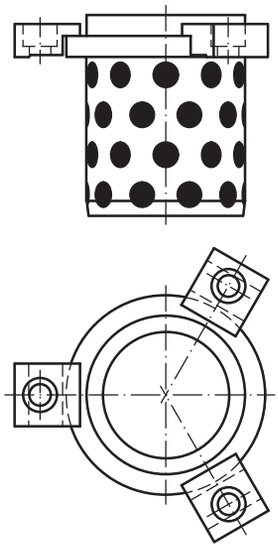

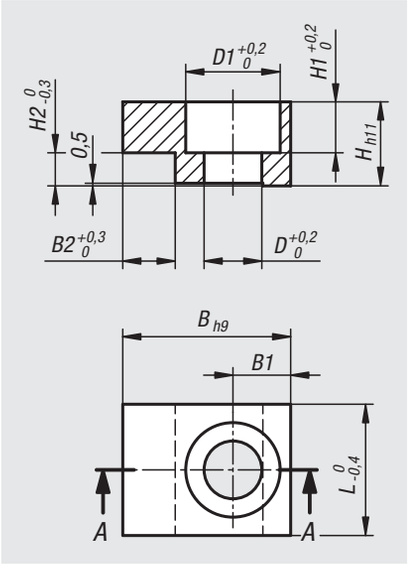

Material:
Steel.

Sample order:
nlm 23682-2020

Note:
The retaining clips are used to fixate the DIN 9834 / ISO 9448 guide bushes.

Order No.	B	B1	B2	D	D1	L	H	H1	H2
23682-2020	20	7,5	5	7	11	20	10	7	6,3
23682-2520	25	10	5	9	15	20	12	8,5	6,3
23682-3225	32	11	10	11	18	25	16	11,5	6,3

Notes

norelem

Notes

Plain bearings

plastic

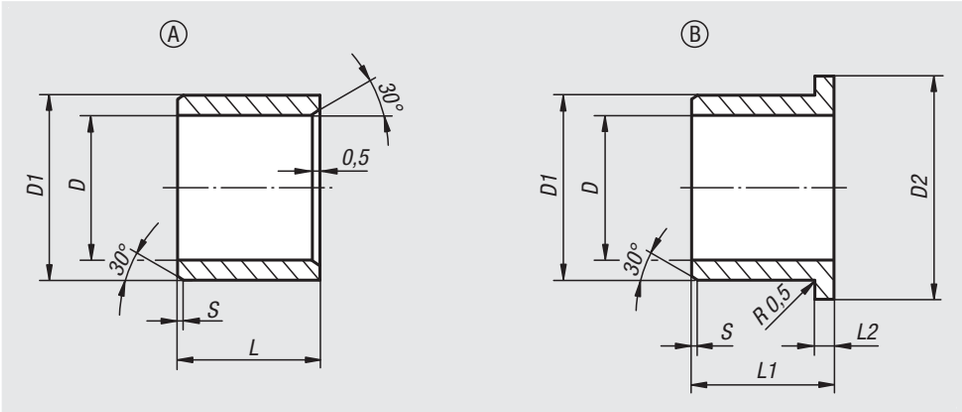

Material:
High-performance polymer iglidur® G, iglidur® J or iglidur® X.

Version:
iglidur® G grey;
iglidur® J yellow;
iglidur® X black

Sample order:
nlm 23710-11030403

Note:
Plastic high-performance polymer plain bearings.

– maintenance-free
– lubricant-free
– corrosion-resistant
– resistant to dirt
– high dimensional precision
– high pressure resistance
– good heat dissipation
– very low creep tendencies
– high mechanical damping
– resistant to UV radiation.

Assembly:
The bearings are designed for press fits in H7 bores. After pressing in, the ID of the bearing will be diameter D with the relative tolerance.

The bearings are suitable for shafts with h tolerance (recommended min. h9).

Material	Note	longest endurance times in dry run	for high loads	for high temperatures	low friction/ high speed	dirt-resistant	chemical-resistant	low water absorption	good for edge pressing	possible under water	cost-effective	electrically conducting
iglidur® G	the all-rounder	●	●			●					●	
iglidur® J	low coefficients of friction	●			●			●	●		●	
iglidur® X	temperature and chemical resistant	●	●	●			●	●		●		●

Plain bearings

plastic

iglidur® G bearings

Order No. Form A	Order No. Form B	D	D1	D2	L	L1	L2	S	Tolerance D after force fitting	Max. permissible static surface pressure N/mm²	Temperature range
23710-11050705	23710-12050705	5	7	-/11	5	-/5	-/1	0,3	E10	80	-40 °C to +130 °C
23710-11060806	23710-12060808	6	8	-/12	6	-/8	-/1	0,5	E10	80	-40 °C to +130 °C
23710-11081008	23710-12081007	8	10	-/15	8	-/7,5	-/1	0,5	E10	80	-40 °C to +130 °C
23710-11101210	23710-12101209	10	12	-/18	10	-/9	-/1	0,5	E10	80	-40 °C to +130 °C
23710-11121410	23710-12121412	12	14	-/20	10	-/12	-/1	0,8	E10	80	-40 °C to +130 °C
23710-11141615	23710-12141612	14	16	-/22	15	-/12	-/1	0,8	E10	80	-40 °C to +130 °C
23710-11151720	23710-12151712	15	17	-/23	20	-/12	-/1	0,8	E10	80	-40 °C to +130 °C
23710-11161820	23710-12161817	16	18	-/24	20	-/17	-/1	0,8	E10	80	-40 °C to +130 °C
23710-11202320	23710-12202321	20	23	-/30	20	-/21	-/1,5	0,8	E10	80	-40 °C to +130 °C
23710-11252820	23710-12252821	25	28	-/35	20	-/21	-/1,5	0,8	E10	80	-40 °C to +130 °C
23710-11303430	23710-12303426	30	34	-/42	30	-/26	-/2	0,8	E10	80	-40 °C to +130 °C

iglidur® J bearings

Order No. Form A	Order No. Form B	D	D1	D2	L	L1	L2	S	Tolerance D after force fitting	Max. permissible static surface pressure N/mm²	Temperature range
23710-21050705	23710-22050705	5	7	-/11	5	-/5	-/1	0,3	E10	35	-50 °C to +90 °C
23710-21060806	23710-22060808	6	8	-/12	6	-/8	-/1	0,5	E10	35	-50 °C to +90 °C
23710-21081008	23710-22081007	8	10	-/15	8	-/7,5	-/1	0,5	E10	35	-50 °C to +90 °C
23710-21101210	23710-22101209	10	12	-/18	10	-/9	-/1	0,5	E10	35	-50 °C to +90 °C
23710-21121410	23710-22121412	12	14	-/20	10	-/12	-/1	0,8	E10	35	-50 °C to +90 °C
23710-21141615	23710-22141612	14	16	-/22	15	-/12	-/1	0,8	E10	35	-50 °C to +90 °C
23710-21151720	23710-22151712	15	17	-/23	20	-/12	-/1	0,8	E10	35	-50 °C to +90 °C
23710-21161820	23710-22161817	16	18	-/24	20	-/17	-/1	0,8	E10	35	-50 °C to +90 °C
23710-21202320	23710-22202321	20	23	-/30	20	-/21	-/1,5	0,8	E10	35	-50 °C to +90 °C
23710-21252820	23710-22252821	25	28	-/35	20	-/21	-/1,5	0,8	E10	35	-50 °C to +90 °C
23710-21303430	23710-22303426	30	34	-/42	30	-/26	-/2	0,8	E10	35	-50 °C to +90 °C

iglidur® X bearings

Order No. Form A	Order No. Form B	D	D1	D2	L	L1	L2	S	Tolerance D after force fitting	Max. permissible static surface pressure N/mm²	Temperature range
23710-31050705	23710-32050705	5	7	-/11	5	-/5	-/1	0,3	F10	150	-100 °C to +250 °C
23710-31060806	23710-32060808	6	8	-/12	6	-/8	-/1	0,5	F10	150	-100 °C to +250 °C
23710-31081008	23710-32081007	8	10	-/15	8	-/7,5	-/1	0,5	F10	150	-100 °C to +250 °C
23710-31101210	23710-32101209	10	12	-/18	10	-/9	-/1	0,5	F10	150	-100 °C to +250 °C
23710-31121410	23710-32121412	12	14	-/20	10	-/12	-/1	0,8	F10	150	-100 °C to +250 °C
23710-31141615	23710-32141612	14	16	-/22	15	-/12	-/1	0,8	F10	150	-100 °C to +250 °C
23710-31151720	23710-32151712	15	17	-/23	20	-/12	-/1	0,8	F10	150	-100 °C to +250 °C
23710-31161820	23710-32161817	16	18	-/24	20	-/17	-/1	0,8	F10	150	-100 °C to +250 °C
23710-31202320	23710-32202321	20	23	-/30	20	-/21	-/1,5	0,8	F10	150	-100 °C to +250 °C
23710-31252820	23710-32252821	25	28	-/35	20	-/21	-/1,5	0,8	F10	150	-100 °C to +250 °C
23710-31303430	23710-32303426	30	34	-/42	30	-/26	-/2	0,8	F10	150	-100 °C to +250 °C

Thrust washers plastic

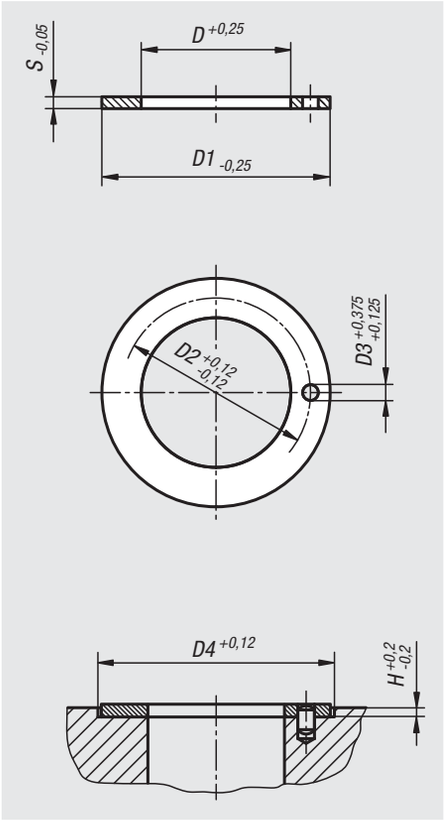

Material:
High-performance polymer iglidur® G.

Version:
grey.

Sample order:
nlm 23715-1050906

Note:
Maintenance-free and lubricant-free thrust washers. They take up axial loads by rotational motion. The loading can be either alternating or permanent.
Electrically insulating. Resistant to UV radiation.

Order No.	D	D1	D2	D3	D4	H	S	Max. permissible static surface pressure N/mm²	Temperature range
23715-1050906	5	9,5	-	-	9,5	0,3	0,6	80	-40 °C to +130 °C
23715-1061515	6	15	-	-	15	1	1,5	80	-40 °C to +130 °C
23715-1081810	8	18	-	-	18	0,7	1	80	-40 °C to +130 °C
23715-1101810	10	18	-	-	18	0,7	1	80	-40 °C to +130 °C
23715-1122415	12	24	18	1,5	24	1	1,5	80	-40 °C to +130 °C
23715-1142015	14	20	-	-	20	1	1,5	80	-40 °C to +130 °C
23715-1152415	15	24	19,5	1,5	24	1	1,5	80	-40 °C to +130 °C
23715-1163015	16	30	22	2	30	1	1,5	80	-40 °C to +130 °C
23715-1183215	18	32	25	2	32	1	1,5	80	-40 °C to +130 °C
23715-1203615	20	36	28	3	36	1	1,5	80	-40 °C to +130 °C
23715-1223815	22	38	30	3	38	1	1,5	80	-40 °C to +130 °C
23715-1244215	24	42	33	3	42	1	1,5	80	-40 °C to +130 °C
23715-1264415	26	44	35	3	44	1	1,5	80	-40 °C to +130 °C
23715-1284815	28	48	38	4	48	1	1,5	80	-40 °C to +130 °C

Notes

Plain bearings

cylindrical

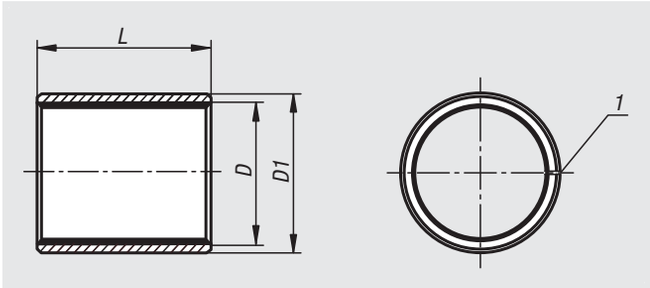

Material:
Base material, steel.
Intermediate layer sintered bronze.
Bearing surface PTFE.

Version:
Steel galvanized.

Sample order:
nlm 23730-00300404

Note:
Maintenance-free rolled composite steel plain bearings particularly suitable for dry running. Also highly suitable for lubricated applications (oil lubrication). Very low wear and friction, no stick-slip effect. Suitable for rotary and oscillating movements, high chemical resistance, low water absorption.

Assembly:
The use of a suitable press mandrel is recommended to avoid damaging the bearing surface. The butt joint must be opposite the load zone. The bearing has an interference fit after installation. Gluing is possible but not required.

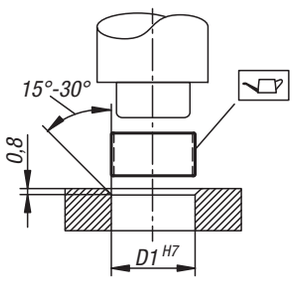

Tolerances:
Housing:
Recommended tolerance H7.
Surface finish Ra 0.8 to 1.6.
Chamfer (press-in side 0.8 to 1.2 x 15°).

Shaft:
Recommended tolerance h8 to f7. For applications at a low speed and small loads drawn shafts with h9 can also be used.
Shaft surface Ra 0.4 to 0.8 (preferably ground shafts) for drawn shafts Ra 1.6 to 3.2.

Technical data:
Static load: max. 250 N/mm²
Dynamic load: max. 140 N/mm²
Friction coefficient, dry: 0.03 to 0.20
Sliding speed, dry: max. 2 m/s
Sliding speed, oil lubricated: max. 5 m/s
Thermal conductivity: 42 W(m*K)-1
Thermal expansion coefficient: 11*10-6 K-1
Temperature range: -195°C to +280°C

Drawing reference:
1) Butt joint

Order No.	D	D1	L
23730-00300404	3	4,5	4
23730-00300405	3	4,5	5
23730-00300406	3	4,5	6
23730-00400504	4	5,5	4
23730-00400506	4	5,5	6
23730-00400508	4	5,5	8
23730-00500705	5	7	5
23730-00500708	5	7	8
23730-00600805	6	8	5
23730-00600806	6	8	6
23730-00600810	6	8	10
23730-00700910	7	9	10
23730-00801006	8	10	6
23730-00801008	8	10	8
23730-00801010	8	10	10
23730-01001206	10	12	6
23730-01001208	10	12	8
23730-01001210	10	12	10
23730-01001212	10	12	12
23730-01001215	10	12	15
23730-01001220	10	12	20

Plain bearings

cylindrical

Order No.	D	D1	L
23730-01201406	12	14	6
23730-01201408	12	14	8
23730-01201410	12	14	10
23730-01201412	12	14	12
23730-01201415	12	14	15
23730-01201420	12	14	20
23730-01401610	14	16	10
23730-01401620	14	16	20
23730-01501710	15	17	10
23730-01501712	15	17	12
23730-01501715	15	17	15
23730-01501720	15	17	20
23730-01601810	16	18	10
23730-01601815	16	18	15
23730-01601820	16	18	20
23730-01601825	16	18	25
23730-01802020	18	20	20
23730-02002310	20	23	10
23730-02002312	20	23	12
23730-02002315	20	23	15
23730-02002320	20	23	20
23730-02002330	20	23	30
23730-02202520	22	25	20
23730-02402725	24	27	25
23730-02502815	25	28	15
23730-02502820	25	28	20
23730-02502825	25	28	25
23730-02502830	25	28	30
23730-02502840	25	28	40
23730-02602915	26	29	15
23730-02602920	26	29	20
23730-02602930	26	29	30
23730-02803220	28	32	20
23730-02803225	28	32	25
23730-03003412	30	34	12
23730-03003415	30	34	15
23730-03003420	30	34	20
23730-03003430	30	34	30
23730-03003435	30	34	35
23730-03203620	32	36	20
23730-03203625	32	36	25
23730-03503920	35	39	20
23730-03503940	35	39	40
23730-03804225	38	42	25
23730-04004420	40	44	20
23730-04004430	40	44	30
23730-04004450	40	44	50
23730-05005530	50	55	30
23730-05005550	50	55	50

Plain bearings

with collar

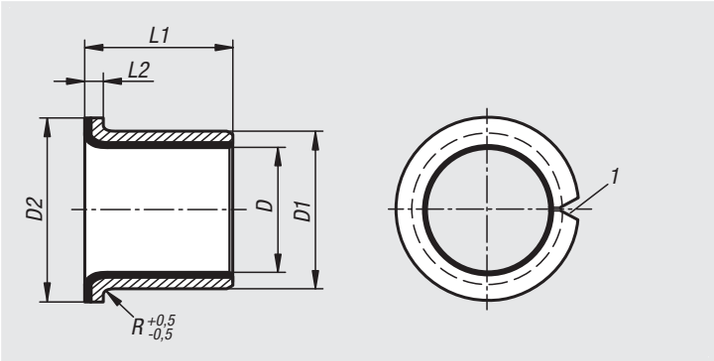

Material:
Base material, steel.
Intermediate layer sintered bronze.
Bearing surface PTFE.

Version:
Steel galvanized.

Sample order:
nlm 23731-00400505

Note:
Maintenance-free rolled composite steel plain bearings particularly suitable for dry running. Also highly suitable for lubricated applications (oil lubrication). Very low wear and friction, no stick-slip effect. Suitable for rotary and oscillating movements, high chemical resistance, low water absorption.

Assembly:
The use of a suitable press mandrel is recommended to avoid damaging the bearing surface. The butt joint must be opposite the load zone. The bearing has an interference fit after installation. Gluing is possible but not required.

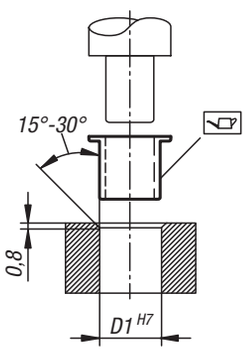

Tolerances:
Housing:
Recommended tolerance H7.
Surface finish Ra 0.8 to 1.6.
Chamfer (press-in side 0.8 to 1.2 x 15°).

Shaft:
Recommended tolerance h8 to f7. For applications at a low speed and small loads drawn shafts with h9 can also be used.
Shaft surface Ra 0.4 to 0.8 (preferably ground shafts) for drawn shafts Ra 1.6 to 3.2.

Technical data:
Static load: max. 250 N/mm²
Dynamic load: max. 140 N/mm²
Friction coefficient, dry: 0.03 to 0.20
Sliding speed, dry: max. 2 m/s
Sliding speed, oil lubricated: max. 5 m/s
Thermal conductivity: 42 W(m*K)-1
Thermal expansion coefficient: 11*10-6 K-1
Temperature range: -195°C to +280°C

Drawing reference:
1) Butt joint

Order No.	D	D1	D2	L1	L2	R
23731-00400505	4	5,5	9	5,6	1	0,5
23731-00600807	6	8	12	7	1	1
23731-00801005	8	10	15	5,5	1	1
23731-00801009	8	10	15	9,5	1	1
23731-01001209	10	12	18	9	1	1
23731-01001212	10	12	18	12	1	1
23731-01201417	12	14	20	17	1	1
23731-01401617	14	16	22	17	1	1
23731-01501712	15	17	23	12	1	1
23731-01501717	15	17	23	17	1	1
23731-01601817	16	18	24	17	1	1
23731-01802012	18	20	26	12	1	1
23731-02002311	20	23	30	11,5	1,5	1,5
23731-02202521	22	25	32	21,5	1,5	1,5
23731-02502826	25	28	35	26,5	1,5	1,5
23731-03003430	30	34	42	30	2	2
23731-03503926	35	39	47	26	2	2
23731-04004426	40	44	53	26	2	2
23731-05005522	50	55	65	22	2,5	2

Thrust washers

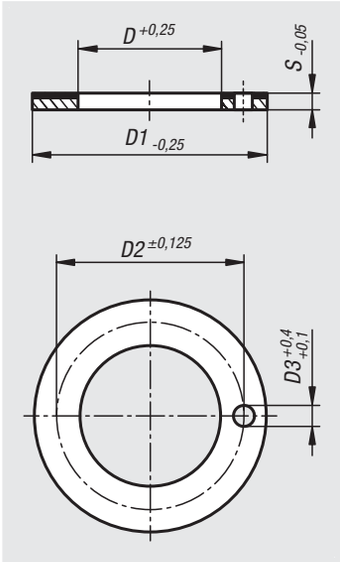

Material:
Base material, steel.
Intermediate layer sintered bronze.
Bearing surface PTFE.

Version:
Steel galvanized.

Sample order:
nlm 23732-01002015

Note:
Maintenance-free steel composite bearings particularly suitable for dry running. Also highly suitable for lubricated applications (oil lubrication). They take up axial loads by rotating movements. The axial loads that occur can be both cyclic or permanent. Very low wear and friction, no stick-slip effect. High chemical resistance, low water absorption.

Technical data:
Static load: max. 250 N/mm²
Dynamic load: max. 140 N/mm²
Friction coefficient, dry: 0.03 to 0.20
Sliding speed, dry: max. 2 m/s
Sliding speed, oil lubricated: max. 5 m/s
Thermal conductivity: 42 W(m*K)-1
Thermal expansion coefficient: 11*10-6 K-1
Temperature range: -195°C to +280°C

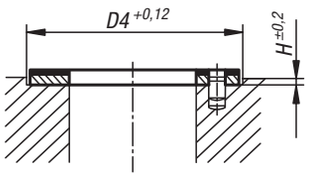

Order No.	D	D1	D2	D3	D4	H	S
23732-01002015	10	20	15	1,5	20	1	1,5
23732-01202415	12	24	18	1,5	24	1	1,5
23732-01402615	14	26	20	2	26	1	1,5
23732-01603015	16	30	23	2	30	1	1,5
23732-01803215	18	32	25	2	32	1	1,5
23732-02003615	20	36	28	3	36	1	1,5
23732-02203815	22	38	30	3	38	1	1,5
23732-02404215	24	42	33	3	42	1	1,5
23732-02604415	26	44	35	3	44	1	1,5
23732-02804815	28	48	38	4	48	1	1,5
23732-03205415	32	54	43	4	54	1	1,5
23732-03806215	38	62	50	4	62	1	1,5
23732-04206615	42	66	54	4	66	1	1,5
23732-04807420	48	74	61	4	74	1,5	2
23732-05207820	52	78	65	4	78	1,5	2
23732-06209020	62	90	76	4	90	1,5	2

Plain bearing sintered bronze

cylindrical

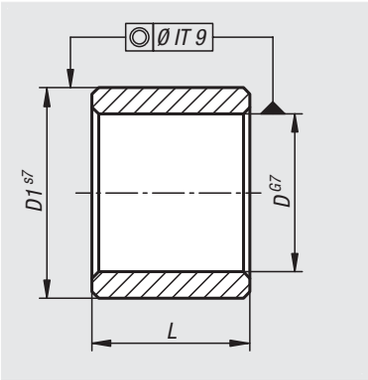

Material:
Sintered bronze similar to SINT A50.

Version:
Oil impregnated (ca. 25 percent by volume oil).
Hardness min. 25 HB.

Sample order:
nlm 23760-00300604

Note:
The sintered bronze plain bearings are oil impregnated, self-lubricating, maintenance-free and ready for installation. During rotation the oil is applied to the shaft and absorbed by the bearing through capillary effect when stationary. Additional lubrication is not required under normal operating conditions.

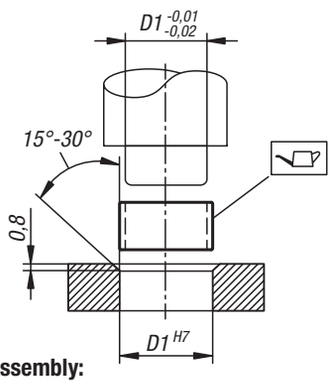

Assembly:
Press in plain bearings, do not hammer in. The use of a suitable press mandrel is advisable. Without a mandrel there is a risk that the bearing may deform during installation. After press-fitting into a housing with bore H7 the bore D has a H7 tolerance.

Tolerances:
Housing:
Recommended tolerance H7.

Shaft:
Recommended tolerance h6 to h9. Hardened or non-hardened ground shafts can be used (for secondary applications drawn shafts can also be used).

Technical data:
Static load: max. 50 N/mm²
Dynamic load: max. 10 N/mm²
Friction coefficient, dry: 0.05 to 0.10
Sliding speed: max. 5 m/s
Maximum pv value: 1.6 N/mm² * m/s
Temperature range: -20 °C to +100 °C

Order No.	D	D1	L
23760-00300604	3	6	4
23760-00300606	3	6	6
23760-00400704	4	7	4
23760-00400804	4	8	4
23760-00500808	5	8	8
23760-00500810	5	8	10
23760-00500816	5	8	16
23760-00600906	6	9	6
23760-00600910	6	9	10
23760-00600912	6	9	12
23760-00600916	6	9	16
23760-00601006	6	10	6
23760-00601010	6	10	10
23760-00601012	6	10	12
23760-00601016	6	10	16
23760-00601206	6	12	6
23760-00801108	8	11	8
23760-00801112	8	11	12
23760-00801208	8	12	8
23760-00801212	8	12	12
23760-00801220	8	12	20
23760-01001310	10	13	10
23760-01001416	10	14	16
23760-01001610	10	16	10
23760-01201512	12	15	12
23760-01201520	12	15	20
23760-01201612	12	16	12
23760-01201812	12	18	12
23760-01201816	12	18	16
23760-01201820	12	18	20
23760-01401822	14	18	22
23760-01402014	14	20	14
23760-01402018	14	20	18
23760-01501920	15	19	20
23760-01502116	15	21	16

Plain bearing sintered bronze

cylindrical

Order No.	D	D1	L
23760-01602016	16	20	16
23760-01602020	16	20	20
23760-01602025	16	20	25
23760-01602032	16	20	32
23760-01602216	16	22	16
23760-01602220	16	22	20
23760-01602232	16	22	32
23760-01802218	18	22	18
23760-01802418	18	24	18
23760-01802428	18	24	28
23760-01802518	18	25	18
23760-02002432	20	24	32
23760-02002516	20	25	16
23760-02002520	20	25	20
23760-02002525	20	25	25
23760-02002532	20	25	32
23760-02002620	20	26	20
23760-02002625	20	26	25
23760-02002632	20	26	32
23760-02002825	20	28	25
23760-02202822	22	28	22
23760-02503020	25	30	20
23760-02503025	25	30	25
23760-02503032	25	30	32
23760-02503040	25	30	40
23760-02503220	25	32	20
23760-02503225	25	32	25
23760-02503232	25	32	32
23760-02503240	25	32	40
23760-02803628	28	36	28
23760-03003824	30	38	24
23760-03003830	30	38	30
23760-03003838	30	38	38
23760-03204032	32	40	32
23760-03504428	35	44	28
23760-03504435	35	44	35
23760-03504535	35	45	35
23760-03604536	36	45	36
23760-04004632	40	46	32
23760-04004640	40	46	40
23760-04005025	40	50	25
23760-04005040	40	50	40
23760-04505545	45	55	45
23760-04505645	45	56	45
23760-05005632	50	56	32
23760-05005650	50	56	50
23760-05006032	50	60	32
23760-05006040	50	60	40
23760-05006050	50	60	50

Plain bearing sintered bronze

with collar

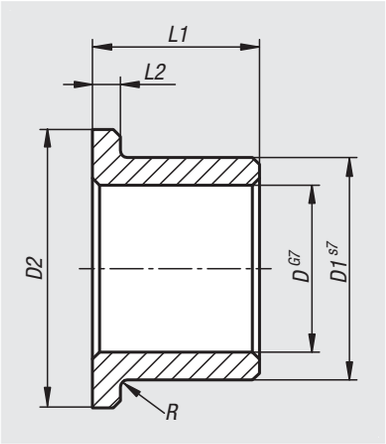

Material:
Sintered bronze similar to SINT A50.

Version:
Oil impregnated (ca. 25 percent by volume oil).
Hardness min. 25 HB.

Sample order:
nlm 23761-00400804

Note:
The sintered bronze plain bearings are oil impregnated, self-lubricating, maintenance-free and ready for installation. During rotation the oil is applied to the shaft and absorbed by the bearing through capillary effect when stationary. Additional lubrication is not required under normal operating conditions.

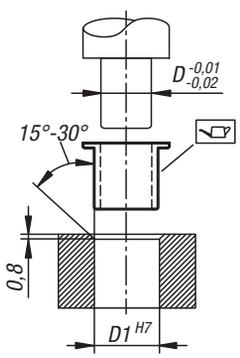

Assembly:
Press in plain bearings, do not hammer in. The use of a suitable press mandrel is advisable. Without a mandrel there is a risk that the bearing may deform during installation. After press-fitting into a housing with bore H7 the bore D has a H7 tolerance.

Tolerances:
Housing:
Recommended tolerance H7.

Shaft:
Recommended tolerance h6 to h9. Hardened or non-hardened ground shafts can be used (for secondary applications drawn shafts can also be used).

Technical data:
Static load: max. 50 N/mm²
Dynamic load: max. 10 N/mm²
Friction coefficient, dry: 0.05 to 0.10
Sliding speed: max. 5 m/s
Maximum pv value: 1.6 N/mm² * m/s
Temperature range: -20 °C to +100 °C

Order No.	D	D1	D2	L1	L2	R
23761-00400804	4	8	12	4	2	0,3
23761-00400808	4	8	12	8	2	0,3
23761-00601006	6	10	14	6	2	0,3
23761-00601010	6	10	14	10	2	0,3
23761-00601016	6	10	14	16	2	0,3
23761-00801208	8	12	16	8	2	0,3
23761-00801212	8	12	16	12	2	0,3
23761-00801216	8	12	16	16	2	0,3
23761-01001310	10	13	16	10	1,5	0,6
23761-01001316	10	13	16	16	1,5	0,6
23761-01001510	10	15	20	10	2,5	0,6
23761-01001516	10	15	20	16	2,5	0,6
23761-01001610	10	16	22	10	3	0,6
23761-01001616	10	16	22	16	3	0,6

Plain bearing sintered bronze

with collar

Order No.	D	D1	D2	L1	L2	R
23761-01201512	12	15	18	12	1,5	0,6
23761-01201516	12	15	18	16	1,5	0,6
23761-01201712	12	17	22	12	2,5	0,6
23761-01201716	12	17	22	16	2,5	0,6
23761-01201812	12	18	24	12	3	0,6
23761-01201820	12	18	24	20	3	0,6
23761-01401814	14	18	22	14	2	0,6
23761-01402014	14	20	26	14	3	0,6
23761-01502015	15	20	25	15	3	0,6
23761-01502020	15	20	25	20	3	0,6
23761-01602016	16	20	24	16	2	0,6
23761-01602020	16	20	24	20	2	0,6
23761-01602216	16	22	28	16	3	0,6
23761-01602220	16	22	28	20	3	0,6
23761-01602225	16	22	28	25	3	0,6
23761-01802218	18	22	26	18	2	0,6
23761-01802418	18	24	30	18	3	0,6
23761-02002416	20	24	28	16	2	0,6
23761-02002420	20	24	28	20	2	0,6
23761-02002616	20	26	32	16	3	0,6
23761-02002620	20	26	32	20	3	0,6
23761-02002625	20	26	32	25	3	0,6
23761-02002632	20	26	32	32	3	0,6
23761-02202815	22	28	34	15	3	0,6
23761-02202820	22	28	34	20	3	0,6
23761-02202825	22	28	34	25	3	0,6
23761-02503020	25	30	35	20	2,5	0,8
23761-02503025	25	30	35	25	2,5	0,8
23761-02503220	25	32	39	20	3,5	0,8
23761-02503225	25	32	39	25	3,5	0,8
23761-02803322	28	33	38	22	2,5	0,8
23761-02803336	28	33	38	36	2,5	0,8
23761-02803622	28	36	44	22	4	0,8
23761-02803636	28	36	44	36	4	0,8
23761-03003820	30	38	46	20	4	0,8
23761-03003825	30	38	46	25	4	0,8
23761-03003830	30	38	46	30	4	0,8
23761-03204020	32	40	48	20	4	0,8
23761-03204025	32	40	48	25	4	0,8
23761-03204030	32	40	48	30	4	0,8
23761-03604528	36	45	54	28	4,5	0,8
23761-03604536	36	45	54	36	4,5	0,8
23761-04005025	40	50	60	25	5	0,8
23761-04005040	40	50	60	40	5	0,8
23761-05006032	50	60	70	32	5	1
23761-05006050	50	60	70	50	5	1

Deep groove ball bearing FAG

single row

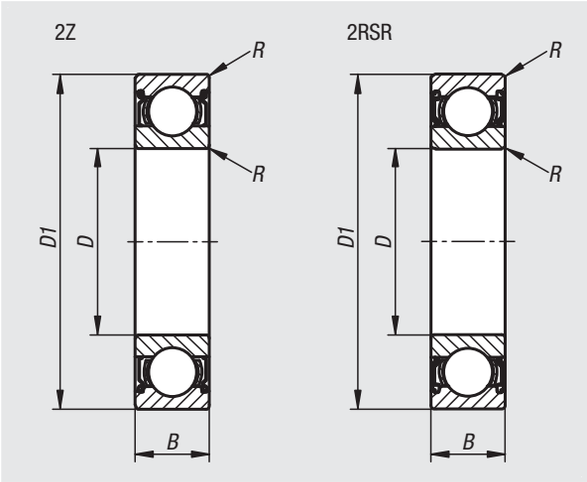

Material:
Inner ring, outer ring and rolling elements, bearing steel.
Cage sheet steel.
Labyrinth seal sheet steel. Lip seal NBR.

Version:
2Z = sealed both sides with non-contact labyrinth seals.
2RSR = sealed both sides with contact lip seals.

Sample order:
nlm 23800-100301004

Note:
Deep groove ball bearings accept high radial and axial loads. Axial loads are absorbed in both directions. The versions 2Z and 2RSR are lubricated for life with a high quality grease.

The main dimensions of the deep groove ball bearings conform to DIN 625-1. Dimensional and running tolerances correspond to tolerance class PN acc. to DIN 620. The radial internal clearance corresponds to the clearance CN acc. to DIN 620-4. These tolerance classes are standard and well suited for most applications.

Temperature range:
-30 °C to +110 °C.

On request:
Open deep groove ball bearing.
Other dimensions and versions.

Order No.	Abbreviation	Version	D	D1	B	R min.	Dynamic load rating N	Static load rating N	Speed limit rpm
23800-100301004	623-2Z	2Z	3	10	4	0,15	640	220	45000
23800-100401305	624-2Z	2Z	4	13	5	0,2	1290	490	38000
23800-100501605	625-2Z	2Z	5	16	5	0,3	1320	440	36000
23800-200501605	625-2RSR	2RSR	5	16	5	0,3	1320	440	24000
23800-100601906	626-2Z	2Z	6	19	6	0,3	2600	1100	32000
23800-200601906	626-2RSR	2RSR	6	19	6	0,3	2600	1100	22000
23800-100701906	607-2Z	2Z	7	19	6	0,3	2600	1100	32000
23800-200701906	607-2RSR	2RSR	7	19	6	0,3	2600	1100	22000
23800-100702207	627-2Z	2Z	7	22	7	0,3	3250	1370	30000
23800-200702207	627-2RSR	2RSR	7	22	7	0,3	3250	1370	20000
23800-100802207	608-2Z	2Z	8	22	7	0,3	3250	1370	30000
23800-200802207	608-2RSR	2RSR	8	22	7	0,3	3250	1370	20000
23800-100902407	609-2Z	2Z	9	24	7	0,3	3650	1630	30000
23800-200902407	609-2RSR	2RSR	9	24	7	0,3	3650	1630	20000
23800-100902608	629-2Z	2Z	9	26	8	0,3	4550	1960	28000
23800-200902608	629-2RSR	2RSR	9	26	8	0,3	4550	1960	19000

Deep groove ball bearing FAG

single row

Order No.	Abbreviation	Version	D	D1	B	R min.	Dynamic load rating N	Static load rating N	Speed limit rpm
23800-101001905	61800-2Z	2Z	10	19	5	0,3	1450	590	36000
23800-201001905	61800-2RSR	2RSR	10	19	5	0,3	1450	590	18000
23800-101002608	6000-2Z	2Z	10	26	8	0,3	4550	1960	28000
23800-201002608	6000-2RSR	2RSR	10	26	8	0,3	4550	1960	19000
23800-101003009	6200-2Z	2Z	10	30	9	0,6	6000	2600	26000
23800-201003009	6200-2RSR	2RSR	10	30	9	0,6	6000	2600	17000
23800-101003511	6300-2Z	2Z	10	35	11	0,6	8150	3450	22000
23800-201003511	6300-2RSR	2RSR	10	35	11	0,6	8150	3450	15000
23800-101202105	61801-2Z	2Z	12	21	5	0,3	1520	670	32000
23800-201202105	61801-2RSR	2RSR	12	21	5	0,3	1520	670	18000
23800-101202808	6001-2Z	2Z	12	28	8	0,3	5100	2360	26000
23800-201202808	6001-2RSR	2RSR	12	28	8	0,3	5100	2360	18000
23800-101203210	6201-2Z	2Z	12	32	10	0,6	6950	3100	24000
23800-201203210	6201-2RSR	2RSR	12	32	10	0,6	6950	3100	16000
23800-101203712	6301-2Z	2Z	12	37	12	1	9650	4150	20000
23800-201203712	6301-2RSR	2RSR	12	37	12	1	9650	4150	13000
23800-101502405	61802-2Z	2Z	15	24	5	0,3	1650	800	28000
23800-201502405	61802-2RSR	2RSR	15	24	5	0,3	1650	800	16000
23800-101503209	6002-2Z	2Z	15	32	9	0,3	5600	2850	24000
23800-201503209	6002-2RSR	2RSR	15	32	9	0,3	5600	2850	16000
23800-101503511	6202-2Z	2Z	15	35	11	0,6	7800	3750	20000
23800-201503511	6202-2RSR	2RSR	15	35	11	0,6	7800	3750	14000
23800-101504213	6302-2Z	2Z	15	42	13	1	11400	5400	18000
23800-201504213	6302-2RSR	2RSR	15	42	13	1	11400	5400	12000
23800-101703510	6003-2Z	2Z	17	35	10	0,3	6000	3250	22000
23800-201703510	6003-2RSR	2RSR	17	35	10	0,3	6000	3250	14000
23800-101704012	6203-2Z	2Z	17	40	12	0,6	9500	4750	18000
23800-201704012	6203-2RSR	2RSR	17	40	12	0,6	9500	4750	12000
23800-101704714	6303-2Z	2Z	17	47	14	1	13400	6550	16000
23800-201704714	6303-2RSR	2RSR	17	47	14	1	13400	6550	11000
23800-102004212	6004-2Z	2Z	20	42	12	0,6	9300	5000	17000
23800-202004212	6004-2RSR	2RSR	20	42	12	0,6	9300	5000	12000
23800-102004714	6204-2Z	2Z	20	47	14	1	12700	6550	15000
23800-202004714	6204-2RSR	2RSR	20	47	14	1	12700	6550	10000
23800-102005215	6304-2Z	2Z	20	52	15	1,1	16000	7800	14000
23800-202005215	6304-2RSR	2RSR	20	52	15	1,1	16000	7800	9500
23800-102504712	6005-2Z	2Z	25	47	12	0,6	10000	5850	15000
23800-202504712	6005-2RSR	2RSR	25	47	12	0,6	10000	5850	10000
23800-102505215	6205-2Z	2Z	25	52	15	1	14000	7800	14000
23800-202505215	6205-2RSR	2RSR	25	52	15	1	14000	7800	9000
23800-102506217	6305-2Z	2Z	25	62	17	1,1	22400	11400	11000
23800-202506217	6305-2RSR	2RSR	25	62	17	1,1	22400	11400	7500

Deep groove ball bearing FAG

single row

Order No.	Abbreviation	Version	D	D1	B	R min.	Dynamic load rating N	Static load rating N	Speed limit rpm
23800-103005513	6006-2Z	2Z	30	55	13	1	12700	8000	13000
23800-203005513	6006-2RSR	2RSR	30	55	13	1	12700	8000	8500
23800-103006216	6206-2Z	2Z	30	62	16	1	19300	11200	11000
23800-203006216	6206-2RSR	2RSR	30	62	16	1	19300	11200	7500
23800-103007219	6306-2Z	2Z	30	72	19	1,1	29000	16300	9500
23800-203007219	6306-2RSR	2RSR	30	72	19	1,1	29000	16300	6300
23800-103506214	6007-2Z	2Z	35	62	14	1	16000	10200	11000
23800-203506214	6007-2RSR	2RSR	35	62	14	1	16000	10200	7500
23800-103507217	6207-2Z	2Z	35	72	17	1,1	22500	15300	9500
23800-203507217	6207-2RSR	2RSR	35	72	17	1,1	22500	15300	6300
23800-103508021	6307-2Z	2Z	35	80	21	1,5	33500	19000	8500
23800-203508021	6307-2RSR	2RSR	35	80	21	1,5	33500	19000	5600
23800-104006815	6008-2Z	2Z	40	68	15	1	16600	11600	10000
23800-204006815	6008-2RSR	2RSR	40	68	15	1	16600	11600	6700
23800-104008018	6208-2Z	2Z	40	80	18	1,1	29000	18000	8500
23800-204008018	6208-2RSR	2RSR	40	80	18	1,1	29000	18000	5600
23800-104009023	6308-2Z	2Z	40	90	23	1,5	42500	25000	7500
23800-204009023	6308-2RSR	2RSR	40	90	23	1,5	42500	25000	5000
23800-104507516	6009-2Z	2Z	45	75	16	1	20000	14300	9000
23800-204507516	6009-2RSR	2RSR	45	75	16	1	20000	14300	6000
23800-104508519	6209-2Z	2Z	45	85	19	1,1	31000	20400	8000
23800-204508519	6209-2RSR	2RSR	45	85	19	1,1	31000	20400	5300
23800-104510025	6309-2Z	2Z	45	100	25	1,5	53000	31500	6700
23800-204510025	6309-2RSR	2RSR	45	100	25	1,5	53000	31500	4500
23800-105008016	6010-2Z	2Z	50	80	16	1	20800	15600	8500
23800-205008016	6010-2RSR	2RSR	50	80	16	1	20800	15600	5600
23800-105009020	6210-2Z	2Z	50	90	20	1,1	36500	24000	7500
23800-205009020	6210-2RSR	2RSR	50	90	20	1,1	36500	24000	4800
23800-105011027	6310-2Z	2Z	50	110	27	2	62000	38000	6000
23800-205011027	6310-2RSR	2RSR	50	110	27	2	62000	38000	4000

norelem

Deep groove ball bearings

stainless steel, DIN 626

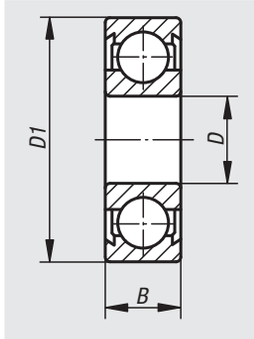

Material:
Stainless steel 1.4125

Version:
Bright.

Sample order:
nlm 23800-01-100802207

Note:
Sealed both sides with non-contact seals.
Used in food and pharmaceutical industries and special machine construction.
Good corrosion resistance.

On request:
Without sealing washer.
Without ball cage.

Order No.	B	D	D1	Dynamic load rating N	Static load rating N	Speed limit rpm
23800-01-100802207	7	8	22	3320	1380	26000
23800-01-101002608	8	10	26	4580	1980	22000
23800-01-101202808	8	12	28	5100	2380	20000
23800-01-101503209	9	15	32	5580	2850	19000
23800-01-101703510	10	17	35	6000	3250	17000
23800-01-102004212	12	20	42	9380	5020	16000
23800-01-102504712	12	25	47	10000	5850	12000
23800-01-103005513	13	30	55	13200	8300	11000

Ceramic ball bearings ZrO2

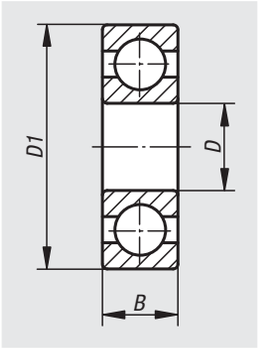

Material:
Ceramic bearings ZrO2.
Bearing cage PTFE.

Version:
Natural, white.

Sample order:
nlm 23800-03-00802207

Note:
Zirconia (ZrO2) is a cost-effective alternative to Si3N4. It also has the advantage that the thermal expansion is similar to that of steel, which means that a shrink fit is not required as expansion differences between the bearing housing and a steel shaft do not occur.

On request:
Special version with PEEK ball cage.
Without ball cage.

Safety:
Reacts with concentrated hydrochloric acid, nitric acid and sulphuric acid.

Order No.	B	D	D1	Dynamic load rating N	Static load rating N	Speed limit rpm
23800-03-02004212	12	20	42	6000	3700	18000
23800-03-01002608	8	10	26	3000	1400	31000
23800-03-01503209	9	15	32	3600	2100	24000
23800-03-01703510	10	17	35	3900	2300	21000
23800-03-01202808	8	12	28	3300	1700	29000
23800-03-03005513	13	30	55	8500	7600	12500
23800-03-02504712	12	25	47	6500	5800	15000
23800-03-00802207	7	8	22	2000	1000	37000

Ceramic ball bearings Si3N4

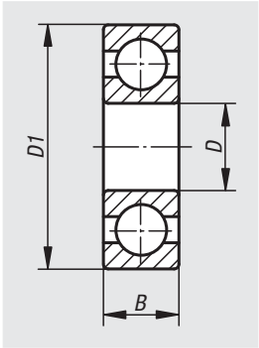

Material:
Ceramic bearings Si3N4.
Bearing cage PTFE.

Version:
Natural, black.

Sample order:
nlm 23800-04-00802207

Note:
For most applications Si3N4 is the preferred material for ceramic bearings.
Silicon nitride bearings are light, very hard and highly wear resistant.
High and ultra-high performance bearings are used in e.g. aerospace technology, metal production industries (high application temperatures), machine manufacturing, chemical industries (chemically aggresive substances), pharmaceutical and medical industries, semiconductor and biotechnology (clean room enviroments which may not be contaminated by lubricants).

On request:
Special version with PEEK ball cage.
Without ball cage.

Order No.	B	D	D1	Dynamic load rating N	Static load rating N	Speed limit rpm
23800-04-00802207	7	8	22	2300	1100	41000
23800-04-01002608	8	10	26	3300	1600	34000
23800-04-01202808	8	12	28	3600	1900	32000
23800-04-01503209	9	15	32	4000	2300	27000
23800-04-01703510	10	17	35	4300	2600	23000
23800-04-02004212	12	20	42	6700	4100	20000
23800-04-02504712	12	25	47	7200	4800	17000
23800-04-03005513	13	30	55	9400	9400	14000

Angular contact ball bearing FAG

single-row

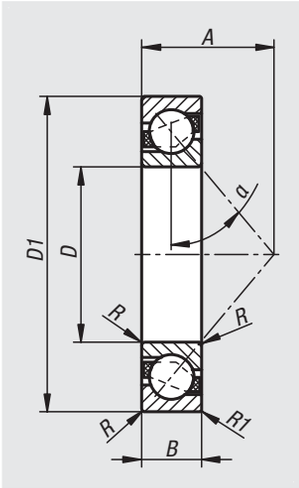

Material:
Inner ring, outer ring and rolling elements, bearing steel.
Cage reinforced fibre glass polyamide.

Version:
open.

Sample order:
nlm 23805-001003009

Note:
Single row angular contact ball bearings accept high radial and axial loads. Axial loads are absorbed in only one direction against the shoulder guide. For axial counter support a second bearing mounted inverse is required. The pressure angle of 40° make these bearings highly resilient. Suitable for high speeds.

The main dimensions of angular contact ball bearings conform to DIN 628-1. Dimensional and running tolerances correspond to tolerance class PN acc. to DIN 620. These tolerance classes are standard and are well suited for most applications.

Temperature range:
-30 °C to +120 °C.

On request:
Sealed both sides with NBR contact lip seals. Other dimensions and versions.

Order No.	Abbreviation	Version	D	D1	B	R min.	R1 min.	α	A	Dynamic load rating N	Static load rating N	Speed limit rpm
23805-001003009	7200-B-TVP	open	10	30	9	0,6	0,3	40°	13	5300	2600	32000
23805-001203210	7201-B-TVP	open	12	32	10	0,6	0,3	40°	14	7400	3550	28000
23805-001503511	7202-B-TVP	open	15	35	11	0,6	0,3	40°	16	8400	4450	24000
23805-001704012	7203-B-TVP	open	17	40	12	0,6	0,3	40°	18	10500	5700	20000
23805-002004714	7204-B-TVP	open	20	47	14	1	0,6	40°	21	14400	7800	18000
23805-002505215	7205-B-TVP	open	25	52	15	1	0,6	40°	24	15300	9000	16000
23805-003006216	7206-B-TVP	open	30	62	16	1	0,6	40°	27	21700	14100	13000
23805-003507217	7207-B-TVP	open	35	72	17	1,1	0,6	40°	31	28000	19000	11000
23805-004008018	7208-B-TVP	open	40	80	18	1,1	0,6	40°	34	34000	23500	9500
23805-004508519	7209-B-TVP	open	45	85	19	1,1	0,6	40°	37	37500	27000	8500
23805-005009020	7210-B-TVP	open	50	90	20	1,1	0,6	40°	39	39000	28500	8000

Spherical roller bearing FAG

cylindrical bore

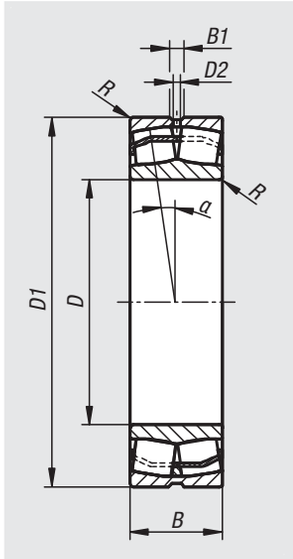

Material:
Inner ring, outer ring and rolling elements, bearing steel.
Cage, steel.

Version:
open.

Sample order:
nlm 23815-002505218

Note:
Spherical roller bearings accept high radial and axial loads.
Axial loads are absorbed in both directions.
They are designed for high loading. Spherical roller bearings compensate for angular errors (set angle α). With groove and lubrication holes.

The main dimensions of the spherical roller bearing conform to DIN 625-2. Dimensional and running tolerances correspond to tolerance class PN acc. to DIN 620. The radial internal clearance corresponds to the clearance CN acc. to DIN 620-4. These tolerance classes are standard and well suited for most applications.

Temperature range:
-30 °C to +200 °C.

On request:
Other dimensions and versions.

Order No.	Abbreviation	Version	D	D1	D2	B	B1	R min.	α	Dynamic load rating N	Static load rating N	Speed limit rpm
23815-002505218	22205-E1	open	25	52	3,2	18	4,8	1	1,5°	48000	42500	17000
23815-003006220	22206-E1	open	30	62	3,2	20	4,8	1	1,5°	64000	57000	13000
23815-003507223	22207-E1	open	35	72	3,2	23	4,8	1,1	1,5°	88000	81500	11000
23815-004008023	22208-E1	open	40	80	3,2	23	4,8	1,1	1,5°	101000	91000	10000
23815-004508523	22209-E1	open	45	85	3,2	23	4,8	1,1	1,5°	104000	99000	10000
23815-005009023	22210-E1	open	50	90	3,2	23	4,8	1,1	1,5°	109000	107000	9500

Cylinder roller bearing FAG

with cage

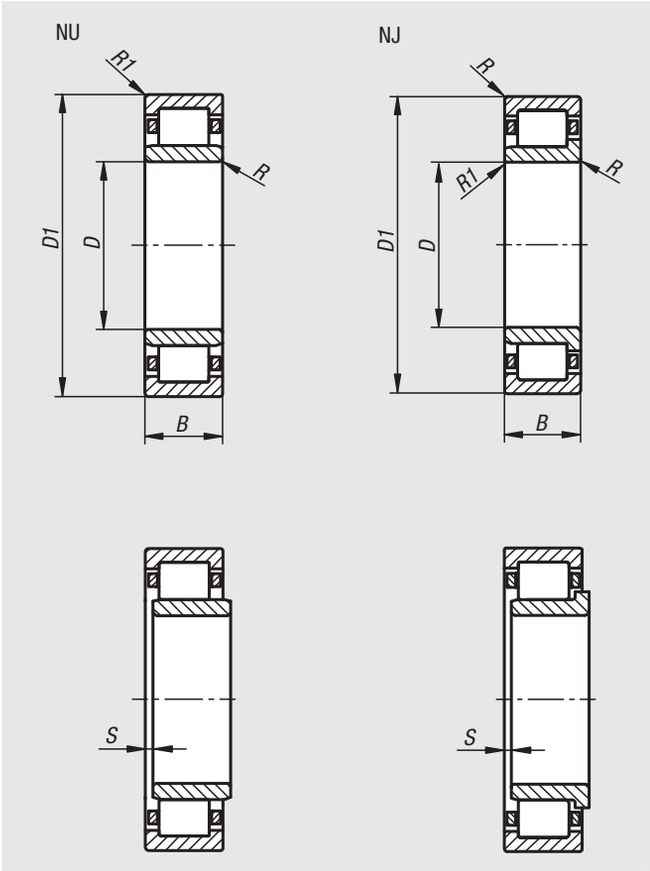

Material:
Inner ring, outer ring and rolling elements, bearing steel.
Cage reinforced fibre glass polyamide.

Version:
NU floating bearing.
NJ support bearing.

Sample order:
nlm 23820-001503511

Note:
Cylinder roller bearings accept high radial loads. The bearings are separable. The bearing parts can be fitted independently of each other. This means that both bearing rings can have a tight fit. The bearings are supplied without seals. They can be lubricated with grease or oil from the side. Suitable for high speeds.
NU version are floating bearings and accept only radial forces. The outer ring has two flanges, the inner ring has none. Outer and inner rings can be displaced by the value S in both directions.

NJ versions are support bearings and accept axial loads in one direction in addition to radial loads. The outer ring has two flanges, the inner ring has one flange. Outer and inner rings can be displaced in one direction by the value S.

Dimensional and running tolerances correspond to tolerance class PN acc. to DIN 620. This radial clearance corresponds to the clearance CN acc. to DIN 620-4. These tolerance classes are standard and are well suited for most applications.

Temperature range:
-30 °C to +120 °C.

On request:
Other dimensions and versions.

Order No.	Abbreviation	Version	D	D1	B	R min.	R1 min.	S	Dynamic load rating N	Static load rating N	Speed limit rpm
23820-001503511	NU-202-E-TVP2	NU floating bearing	15	35	11	0,6	0,3	1,6	15100	10400	22000
23820-101503511	NJ-202-E-TVP2	NJ support bearing	15	35	11	0,6	0,3	1,6	15100	10400	22000
23820-001704012	NU-203-E-TVP2	NU floating bearing	17	40	12	0,6	0,3	1,2	20800	14600	18000
23820-101704012	NJ-203-E-TVP2	NJ support bearing	17	40	12	0,6	0,3	1,2	20800	14600	18000
23820-002004714	NU-204-E-TVP2	NU floating bearing	20	47	14	1	0,6	0,8	32500	24700	16000
23820-102004714	NJ-204-E-TVP2	NJ support bearing	20	47	14	1	0,6	1	32500	24700	16000
23820-002505215	NU-205-E-TVP2	NU floating bearing	25	52	15	1	0,6	1,3	34500	27500	15000
23820-102505215	NJ-205-E-TVP2	NJ support bearing	25	52	15	1	0,6	1,2	34500	27500	15000
23820-003006216	NU-206-E-TVP2	NU floating bearing	30	62	16	1	0,6	1,5	45000	36000	12000
23820-103006216	NJ-206-E-TVP2	NJ support bearing	30	62	16	1	0,6	1,5	45000	36000	12000
23820-003507217	NU-207-E-TVP2	NU floating bearing	35	72	17	1,1	0,6	0,7	58000	48500	10000
23820-103507217	NJ-207-E-TVP2	NJ support bearing	35	72	17	1,1	0,6	0,7	58000	48500	10000
23820-004008018	NU-208-E-TVP2	NU floating bearing	40	80	18	1,1	1,1	1	63000	53000	9000
23820-104008018	NJ-208-E-TVP2	NJ support bearing	40	80	18	1,1	1,1	1	63000	53000	9000
23820-004508519	NU-209-E-TVP2	NU floating bearing	45	85	19	1,1	1,1	1	72000	63000	8500
23820-104508519	NJ-209-E-TVP2	NJ support bearing	45	85	19	1,1	1,1	1,9	72000	63000	8500
23820-005009020	NU-210-E-TVP2	NU floating bearing	50	90	20	1,1	1,1	1,3	75000	69000	8000
23820-105009020	NJ-210-E-TVP2	NJ support bearing	50	90	20	1,1	1,1	1,3	75000	69000	8000

Tapered roller bearing FAG

single row

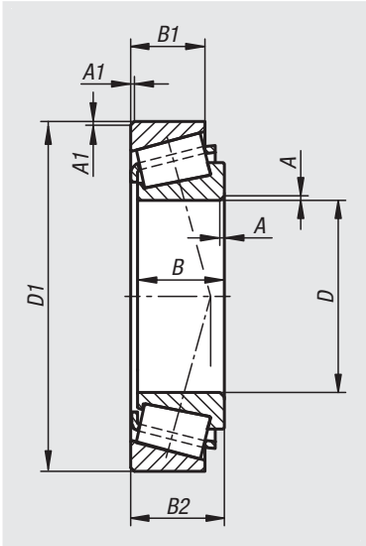

Material:
Inner ring, outer ring and rolling elements, bearing steel.
Cage, steel.

Version:
Series 302
Series 303
Series 320 (ISO dimension)

Sample order:
nlm 23825-101504213

Note:
Tapered roller bearings can accept high radial and axial loads. Axial loads are absorbed in only one direction. For axial counter support a second bearing mounted inverse is required. Suitable for medium speeds.

The bearings are separable. This means the bearing parts can be fitted independently of each other. The bearings are supplied without seals. They can be lubricated with grease or oil from the side.

The main dimensions of the tapered roller bearings conform to DIN ISO 355 and DIN 720. Dimensional and running tolerances correspond to tolerance class PN acc. to DIN 620. These tolerance classes are standard and are well suited for most applications.

Temperature range:
-30 °C to +120 °C.

On request:
Other dimensions and versions.

Order No.	Abbreviation	Version	D	D1	B	B1	B2	A	A1	Dynamic load rating N	Static load rating N	Speed limit rpm
23825-101504213	30302-A	Series 303	15	42	13	11	14,25	1	1	23000	20500	21000
23825-001704012	30203-A	Series 302	17	40	12	11	13,25	1	1	18500	17800	21000
23825-101704714	30303-A	Series 303	17	47	14	12	15,25	1	1	27500	24500	18200
23825-302004215	32004-X	Series 320 (ISO dimensions)	20	42	15	12	15	0,6	0,6	24000	28500	18200
23825-002004714	30204-A	Series 302	20	47	14	12	15,25	1	1	27000	27000	16800
23825-102005215	30304-A	Series 303	20	52	15	13	16,25	1,5	1,5	34000	32500	15400
23825-302504715	32005-X	Series 320 (ISO dimensions)	25	47	15	11,5	15	0,6	0,6	26500	33500	15400
23825-102506217	30305-A	Series 303	25	62	17	15	18,25	1,5	1,5	47000	45500	12600
23825-303005517	32006-X	Series 320 (ISO dimensions)	30	55	17	13	17	1	1	38500	46500	12600
23825-003006216	30206-A	Series 302	30	62	16	14	17,25	1	1	43500	48000	11900
23825-103007219	30306-A	Series 303	30	72	19	16	20,75	1,5	1,5	60000	61000	10500
23825-303506218	32007-X	Series 320 (ISO dimensions)	35	62	18	14	18	1	1	45500	57000	11200
23825-003507217	30207-A	Series 302	35	72	17	15	18,25	1,5	1,5	54000	59000	9800
23825-103508021	30307-A	Series 303	35	80	21	18	22,75	2	1,5	73000	75000	9400
23825-304006819	32008-XA	Series 320 (ISO dimensions)	40	68	19	14,5	19	1	1	53000	71000	9800
23825-004008018	30208-A	Series 302	40	80	18	16	19,75	1,5	1,5	61000	67000	8800
23825-104009023	30308-A	Series 303	40	90	23	20	25,25	2	1,5	91000	102000	7800
23825-304507520	32009-XA	Series 320 (ISO dimensions)	45	75	20	15,5	20	1	1	61000	86000	8800
23825-104510025	30309-A	Series 303	45	100	25	18	27,25	2	1,5	96000	108000	6700
23825-305008020	32010-X	Series 320 (ISO dimensions)	50	80	20	15,5	20	1	1	64000	93000	7800
23825-105011027	30310-A	Series 303	50	110	27	23	29,25	2,5	2	130000	148000	6300

Axial ball bearing FAG

single direction

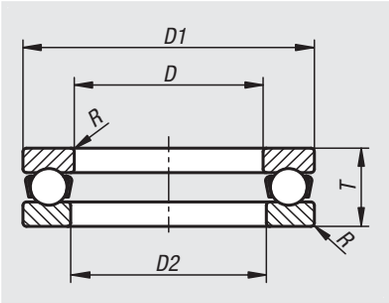

Material:
Housing washer, shaft washer and rolling elements, bearing steel.
Cage, steel.

Sample order:
nlm 23830-001002409

Note:
Axial ball bearings accept high axial loads from one direction but may not be loaded radially.
The bearings are separable. This means the bearing parts can be fitted independently of each other.

The main dimensions of the axial ball bearing conform to ISO 104 and DIN 711. Dimensional and running tolerances correspond to tolerance class PN acc. to DIN 620. These tolerance classes are standard and are well suited for most applications.

Temperature range:
-30 °C to +150 °C.

On request:
Other dimensions and versions.

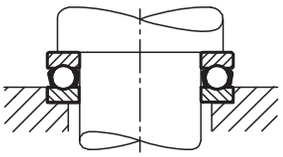

Order No.	Abbreviation	D	D1	D2	T	R min.	Dynamic load rating N	Static load rating N	Speed limit rpm
23830-01002409	51100	10	24	11	9	0,3	10000	14000	13000
23830-01202609	51101	12	26	13	9	0,3	10400	15300	13000
23830-01202811	51201	12	28	14	11	0,6	13200	19000	10000
23830-01502809	51102	15	28	16	9	0,3	10600	16600	12000
23830-01503212	51202	15	32	17	12	0,6	16600	25000	9000
23830-01703009	51103	17	30	18	9	0,3	11400	19600	11000
23830-01703512	51203	17	35	19	12	0,6	17300	27500	8500
23830-02003510	51104	20	35	21	10	0,3	15000	26500	9500
23830-02004014	51204	20	40	22	14	0,6	22400	37500	7500
23830-02504211	51105	25	42	26	11	0,6	18000	35500	9000
23830-02504715	51205	25	47	27	15	0,6	28000	50000	6700
23830-03004711	51106	30	47	32	11	0,6	19000	40000	8000
23830-03005216	51206	30	52	32	16	0,6	25000	46500	6300
23830-03505212	51107	35	52	37	12	0,6	20000	46500	7500
23830-03506218	51207	35	62	37	18	1	35500	67000	5300
23830-04006013	51108	40	60	42	13	0,6	27000	63000	6300
23830-04006819	51208	40	68	42	19	1	46500	98000	4800
23830-04506514	51109	45	65	47	14	0,6	28000	69500	6000
23830-04507320	51209	45	73	47	20	1	39000	80000	4800
23830-05007014	51110	50	70	52	14	0,6	29000	75000	5600
23830-05007822	51210	50	78	52	22	1	50000	106000	4300

O-rings

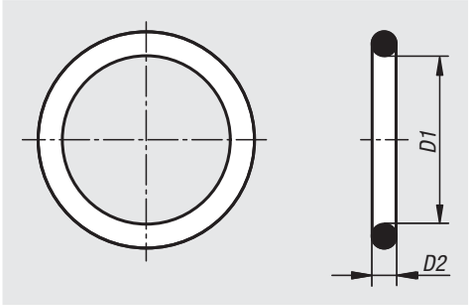

Material:
Elastomer NBR.

Version:
Shore ~70, black.

Sample order:
nlm 23900-100074102
(include dimension D2 e.g. 102 for D2 = 1,02 mm.)

Note:
O-rings are universal sealing elements used to seal against liquid or gaseous median. They are suitable for static and minor dynamic applications. O-rings can be used for radial and axial sealing. The sealing occurs during installation by the radial or axial compression of the cross-section. During operation, the median pressure increases the deformation of the O-ring and so increases the sealing effectiveness. For best sealing effectiveness, the O-ring should have the largest possible cross-section.

During installation the correct groove size, compaction, elongation/ compression should be ensured.

By static use the compaction should be 15 - 30% of the cross-section. By dynamic use it should be 10 - 18% (hydraulic), 4 - 12% (pneumatic).

With regard to the ID, when installed the O-ring should be
stretched max 6%
compressed max 3%

The material NBR has a high wear resistance and is resistant to mineral oil based lubricating oils and grease, hydraulic oils (H, H-L, H-LP), high-flashpoint pressure fluids (HFA, HFB, HFC), aliphatic hydrocarbons, silicon oil and grease, water up to ca. 80° C

Temperature range:
-30 °C to +100 °C.

Technical data:
Visit our website to see the technical information.

Order No.	D1	D2
23900-100074* **	0,74	1,02
23900-100100* **	1	1
23900-100107* **	1,07	1,27
23900-100120* **	1,2	1
23900-100142* **	1,42	1,52
23900-100150* **	1,5	1/1,5
23900-100200* **	2	1/1,5
23900-100240* **	2,4	1,9
23900-100250* **	2,5	1/1,2/1,5
23900-100257* **	2,57	1,78
23900-100260* **	2,6	1,2
23900-100290* **	2,9	1,78
23900-100300* **	3	1/1,5/2
23900-100310* **	3,1	1,6

O-rings

Order No.	D1	D2
23900-100317***	3,17	1,78
23900-100330***	3,3	2,4
23900-100340***	3,4	1,9
23900-100350***	3,5	1/1,2/1,5/3
23900-100360***	3,6	2
23900-100363***	3,63	2,62
23900-100368***	3,68	1,78
23900-100400***	4	1/1,2/1,5/2/2,5/3
23900-100420***	4,2	1,9
23900-100430***	4,3	2,4
23900-100442***	4,42	2,62
23900-100447***	4,47	1,78
23900-100450***	4,5	1/1,5/2
23900-100460***	4,6	2
23900-100490***	4,9	1,9
23900-100500***	5	1/1,5/2/2,5/3/3,5
23900-100510***	5,1	1,6
23900-100523***	5,23	2,62
23900-100528***	5,28	1,78
23900-100550***	5,5	1/1,5/2
23900-100570***	5,7	1,9
23900-100600***	6	1/1,5/2/2,5/3
23900-100602***	6,02	2,62
23900-100607***	6,07	1,78
23900-100610***	6,1	1,6
23900-100630***	6,3	2,4
23900-100635***	6,35	1,78
23900-100640***	6,4	1,9
23900-100650***	6,5	1/1,5/2/2,5
23900-100675***	6,75	1,78
23900-100700***	7	1/1,5/2/2,5/3
23900-100710***	7,1	1,6
23900-100720***	7,2	1,9
23900-100750***	7,5	1/1,5/2/2,4/2,5/3
23900-100752***	7,52	3,53
23900-100765***	7,65	1,78
23900-100800***	8	1/1,25/1,5/1,8/1,9/2,4/2,5/3/3,5/4
23900-100810***	8,1	1,6
23900-100830***	8,3	2,4
23900-100850***	8,5	1/1,5/2/2,5
23900-100873***	8,73	1,78
23900-100890***	8,9	1,9/2,7
23900-100900***	9	1/1,2/1,5/2/2,5/3/3,5/4
23900-100910***	9,1	1,6
23900-100919***	9,19	2,62
23900-100930***	9,3	2,4
23900-100950***	9,5	1,5/2/2,5/3
23900-100992***	9,92	2,62

Order No.	D1	D2
23900-101000***	10	1/1,3/1,5/2/2,5/3/3,5/4/5
23900-101010***	10,1	1,6
23900-101030***	10,3	2,4
23900-101050***	10,5	1,5/2/2,5/2,7
23900-101077***	10,77	2,62
23900-101082***	10,82	1,78
23900-101100***	11	1/1,5/2/2,5/3/3,5/4/5
23900-101110***	11,1	1,6
23900-101111***	11,11	1,78
23900-101150***	11,5	1/1,5/2/3
23900-101191***	11,91	2,62
23900-101200***	12	1/1,2/1,5/1,7/2/2,5/3/3,5/4/5
23900-101210***	12,1	1,6/2,7
23900-101230***	12,3	2,4
23900-101237***	12,37	2,62
23900-101242***	12,42	1,78
23900-101250***	12,5	1/1,5/2/2,5
23900-101300***	13	1/1,25/1,5/2/2,5/3/3,5/4/5
23900-101310***	13,1	1,6/2,62
23900-101330***	13,3	2,4
23900-101350***	13,5	1,5/2,5
23900-101360***	13,6	2,7
23900-101394***	13,94	2,62
23900-101400***	14	1/1,5/1,78/2/2,5/3/3,5/4/5
23900-101410***	14,1	1,6
23900-101450***	14,5	1/2,5
23900-101500***	15	1/1,5/2/3/3,5/4/5/6
23900-101508***	15,08	2,62
23900-101510***	15,1	1,6
23900-101530***	15,3	2,4
23900-101550***	15,5	2,5
23900-101554***	15,54	2,62
23900-101560***	15,6	1,78
23900-101600***	16	1/1,25/1,5/2/3/3,5/4/5
23900-101610***	16,1	1,6
23900-101630***	16,3	2,4
23900-101690***	16,9	2,7
23900-101700***	17	1/1,5/2/2,5/3/3,5/4
23900-101710***	17,1	1,6
23900-101712***	17,12	2,62
23900-101717***	17,17	1,78
23900-101730***	17,3	2,4
23900-101750***	17,5	1,5/2,5
23900-101800***	18	1/1,3/1,5/2/2,5/3/3,5/4/5/6
23900-101810***	18,1	1,6
23900-101830***	18,3	2,4
23900-101840***	18,4	2,7
23900-101850***	18,5	1,5/2/3

O-rings

Order No.	D1	D2
23900-101864***	18,64	3,53
23900-101872***	18,72	2,62
23900-101877***	18,77	1,78
23900-101900***	19	1/1,5/2/2,5/3/4/5
23900-101910***	19,1	1,6
23900-101930***	19,3	2,4
23900-101950***	19,5	1,5/2
23900-101980***	19,8	3,6
23900-102000***	20	1/1,3/1,5/2/2,5/3/3,5/4/5/6
23900-102010***	20,1	1,6
23900-102020***	20,2	3
23900-102022***	20,22	3,53
23900-102030***	20,3	2,62/2,4
23900-102035***	20,35	1,78
23900-102100***	21	1,5/2/2,5/3/3,5/4/4,5/5/6
23900-102130***	21,3	2,4/3,6
23900-102189***	21,89	2,62
23900-102195***	21,95	1,78
23900-102200***	22	1/1,5/2/2,5/3/3,5/4/5/6
23900-102210***	22,1	1,6
23900-102230***	22,3	2,4
23900-102300***	23	1,5/2/2,5/3/3,5/3,6/4/5
23900-102330***	23,3	2,4
23900-102400***	24	1/1,5/2/2,5/3/3,5/4/5/6
23900-102460***	24,6	3,6
23900-102499***	24,99	3,53
23900-102500***	25	1/1,5/2/2,5/3/3,5/4/5/6
23900-102507***	25,07	2,62
23900-102510***	25,1	1,6
23900-102512***	25,12	1,78
23900-102530***	25,3	2,4
23900-102600***	26	1/1,5/2/2,5/3/3,5/4/5
23900-102620***	26,2	3,6
23900-102650***	26,5	2,5
23900-102657***	26,57	3,53
23900-102664***	26,64	2,62
23900-102670***	26,7	1,78
23900-102700***	27	1/1,5/2/2,5/4/5/6
23900-102710***	27,1	1,6
23900-102730***	27,3	2,4
23900-102780***	27,8	3,6
23900-102800***	28	1,5/2/2,5/3/3,5/4/5/6
23900-102824***	28,24	2,62
23900-102830***	28,3	1,78
23900-102850***	28,5	1,5
23900-102900***	29	1,5/2/2,5/3/3,5/4/5/6
23900-102910***	29,1	1,6
23900-102930***	29,3	3,6

Order No.	D1	D2
23900-102974***	29,74	3,53
23900-102982***	29,82	2,62
23900-103000***	30	2/2,5/3/3,5/4/5/6
23900-103030***	30,3	2,4
23900-103080***	30,8	3,6
23900-103100***	31	1,5/2/2,5/3/3,5/4/5
23900-103134***	31,34	3,53
23900-103142***	31,42	2,62
23900-103147***	31,47	1,78
23900-103200***	32	1,5/2/2,5/3/3,5/4/4,5/5/6
23900-103210***	32,1	1,6
23900-103250***	32,5	3,6
23900-103269***	32,69	5,33
23900-103292***	32,92	3,53
23900-103300***	33	2/2,5/3/4/5
23900-103305***	33,05	1,78
23900-103330***	33,3	2,4
23900-103400***	34	1,5/2/2,5/3,5/4/5
23900-103410***	34,1	3,6
23900-103452***	34,52	3,53
23900-103459***	34,59	2,62
23900-103465***	34,65	1,78
23900-103500***	35	1,5/2/2,5/3/3,5/4/5/6
23900-103510***	35,1	1,6
23900-103520***	35,2	5,7
23900-103560***	35,6	3,6
23900-103600***	36	1,5/2/2,5/3/4/5/6
23900-103609***	36,09	3,53
23900-103617***	36,17	2,62
23900-103620***	36,2	5,7
23900-103700***	37	1,5/2/2,5/3,5
23900-103710***	37,1	1,6
23900-103747***	37,47	5,33
23900-103750***	37,5	2,5
23900-103769***	37,69	3,53
23900-103782***	37,82	1,78
23900-103800***	38	2/2,5/3/4/5
23900-103900***	39	2/2,5/3/3,5/4/5
23900-103920***	39,2	3/5,7
23900-103934***	39,34	2,62
23900-104000***	40	1,5/2/2,5/3/3,5/4/4,5/5
23900-104064***	40,64	5,33
23900-104087***	40,87	3,53
23900-104094***	40,94	2,62
23900-104100***	41	1,5/1,78/2/2,5/3/3,5/4/5
23900-104120***	41,2	5,7
23900-104200***	42	1,5/2/2,5/3/3,5/4/5/6
23900-104252***	42,52	2,62

O-rings

Order No.	D1	D2
23900-104300***	43	1,5/2/2,5/3/3,5/4/5/6
23900-104382***	43,82	5,33
23900-104400***	44	2/2,5/3/4/5
23900-104404***	44,04	3,53
23900-104412***	44,12	2,62
23900-104417***	44,17	1,78
23900-104500***	45	1,5/2/2,5/3/3,5/4/4,5/5/6
23900-104569***	45,69	2,62
23900-104600***	46	1,5/2/2,5/3/4/5/6
23900-104604***	46,04	3,53
23900-104700***	47	2/2,5/3/4/5
23900-104720***	47,2	5,7
23900-104722***	47,22	3,53
23900-104729***	47,29	2,62
23900-104763***	47,63	3,53
23900-104800***	48	1,5/2/2,5/3/4/5/6
23900-104890***	48,9	2,62
23900-104900***	49	1,5/2/3/4/4,5/5/6
23900-104920***	49,2	5,7
23900-105000***	50	2/2,5/3/4/5/6
23900-105017***	50,17	5,33
23900-105039***	50,39	3,53
23900-105047***	50,47	2,62
23900-105052***	50,52	1,78
23900-105100***	51	2/2,5/3
23900-105120***	51,2	5,7
23900-105200***	52	2/2,5/3/4/5/6
23900-105207***	52,07	2,62
23900-105300***	53	1,5/2/2,5/3/4/4,5/5
23900-105334***	53,34	5,33
23900-105357***	53,57	3,53
23900-105364***	53,64	2,62
23900-105400***	54	1,5/2/2,5/3/4/5
23900-105420***	54,2	5,7
23900-105500***	55	1,5/2/2,5/3/3,5/4/5/6
23900-105520***	55,2	5,7
23900-105525***	55,25	2,62
23900-105556***	55,56	3,53
23900-105600***	56	2/2,5/3/3,5/4/5/6
23900-105652***	56,52	5,33
23900-105674***	56,74	3,53
23900-105682***	56,82	2,62
23900-105687***	56,87	1,78
23900-105700***	57	1,5/2/2,5/3/3,5/4/5
23900-105715***	57,15	3,53
23900-105720***	57,2	5,7
23900-105800***	58	2/2,5/3/4/5
23900-105842***	58,42	2,62

Order No.	D1	D2
23900-105874***	58,74	3,53
23900-105900***	59	1,5/2/2,5/3/4/5
23900-105969***	59,69	5,33
23900-105992***	59,92	3,53
23900-106000***	60	1,5/2/2,5/3/4/5/6
23900-106005***	60,05	1,78
23900-106200***	62	2/3/3,5/4/5/6
23900-106220***	62,2	5,7
23900-106287***	62,87	5,33
23900-106300***	63	1,5/2/2,5/3/4/5/6
23900-106309***	63,09	3,53
23900-106317***	63,17	2,62
23900-106400***	64	2/3/3,5/4
23900-106420***	64,2	5,7
23900-106477***	64,77	2,62
23900-106500***	65	1,5/2/2,5/3/4/5
23900-106600***	66	2/2,5/3/4/5
23900-106604***	66,04	5,33
23900-106627***	66,27	3,53
23900-106634***	66,34	2,62
23900-106640***	66,4	1,78
23900-106700***	67	2,5/3/4/5
23900-106720***	67,2	5,7
23900-106795***	67,95	2,62
23900-106800***	68	2/2,5/3/3,5/4/5/6
23900-106900***	69	1,5/2/3/4
23900-106920***	69,2	5,7
23900-106922***	69,22	5,33
23900-106944***	69,44	3,53
23900-106952***	69,52	2,62
23900-106957***	69,57	1,78
23900-107000***	70	2/2,5/3/3,5/4/5/5,5/6
23900-107100***	71	2/3/4/4,5
23900-107112***	71,12	2,62
23900-107120***	71,2	5,7
23900-107144***	71,44	3,53
23900-107200***	72	2/2,5/3/4/5
23900-107220***	72,2	5,7
23900-107239***	72,39	5,33
23900-107262***	72,62	3,53
23900-107269***	72,69	2,62
23900-107275***	72,75	1,78
23900-107300***	73	2/2,5/3/4/5
23900-107303***	73,03	3,53
23900-107400***	74	1,5/2/3/4
23900-107420***	74,2	5,7
23900-107430***	74,3	2,62
23900-107500***	75	2/2,5/3/4/5/6

O-rings

Order No.	D1	D2
23900-107557***	75,57	5,33
23900-107579***	75,79	3,53
23900-107587***	75,87	2,62
23900-107592***	75,92	1,78
23900-107600***	76	2/2,5/3/4/4,5
23900-107700***	77	2,5/3/4/5
23900-107720***	77,2	5,7
23900-107800***	78	1,5/2/2,5/3/3,5/4/5/6
23900-107874***	78,74	5,33
23900-107897***	78,97	3,53
23900-107900***	79	2,5/3/3,5
23900-108000***	80	1,5/2/2,5/3/3,5/4/4,5/5/6
23900-108100***	81	2/3
23900-108120***	81,2	5,7
23900-108192***	81,92	5,33
23900-108200***	82	2,5/3,5/4
23900-108214***	82,14	3,53
23900-108220***	82,2	5,7
23900-108222***	82,22	2,62
23900-108227***	82,27	1,78
23900-108300***	83	2/3
23900-108400***	84	1,5/2/3/3,5/4
23900-108420***	84,2	5,7
23900-108500***	85	2/2,5/3/4/5/6
23900-108509***	85,09	5,33
23900-108532***	85,32	3,53
23900-108600***	86	2/2,5/3/3,5/4
23900-108700***	87	2/3/4
23900-108720***	87,2	5,7
23900-108800***	88	2/2,5/3/4/5
23900-108827***	88,27	5,33
23900-108857***	88,57	2,62
23900-108862***	88,62	1,78
23900-108900***	89	3
23900-108920***	89,2	5,7
23900-109000***	90	1,5/2/2,5/3/3,5/4/4,5/5
23900-109100***	91	3/4
23900-109144***	91,44	5,33
23900-109167***	91,67	3,53
23900-109200***	92	1,5/2/3/4/5
23900-109220***	92,2	5,7
23900-109300***	93	2/3/4
23900-109400***	94	1,5/2/2,5/3/4/5
23900-109420***	94,2	5,7
23900-109462***	94,62	5,33
23900-109484***	94,84	3,53
23900-109492***	94,92	2,62
23900-109497***	94,97	1,78

Order No.	D1	D2
23900-109500***	95	2/2,5/3/4/4,5/5/6
23900-109600***	96	2/2,5/3/4/5/6
23900-109700***	97	4
23900-109720***	97,2	5,7
23900-109779***	97,79	5,33
23900-109800***	98	1,5/2/2,5/3/4/5
23900-109900***	99	3
23900-109920***	99,2	5,7
23900-110000***	100	1,5/2/2,5/3/3,5/4/5/6
23900-110097***	100,97	5,33
23900-110119***	101,19	3,53
23900-110127***	101,27	2,62
23900-110132***	101,32	1,78
23900-110200***	102	3/4/5
23900-110300***	103	6
23900-110400***	104	2,5/3/3,5/4
23900-110414***	104,14	5,33
23900-110420***	104,2	5,7
23900-110437***	104,37	3,53
23900-110450***	104,5	3
23900-110500***	105	2/2,5/3/4/5
23900-110600***	106	2/2,5/3/4
23900-110700***	107	2/2,5/3/4/5
23900-110732***	107,32	5,33
23900-110754***	107,54	3,53
23900-110762***	107,62	2,62
23900-110800***	108	3/4/5
23900-110920***	109,2	5,7
23900-110950***	109,5	3
23900-111000***	110	2/3/4/4,5/5/6
23900-111049***	110,49	5,33
23900-111072***	110,72	3,53
23900-111200***	112	2/2,5/3/4/5
23900-111367***	113,67	5,33/6,99
23900-111400***	114	3/4/6
23900-111420***	114,2	5,7
23900-111470***	114,7	6,99
23900-111500***	115	2/2,5/3/4/4,5/5
23900-111600***	116	3/4
23900-111684***	116,84	5,33/6,99
23900-111707***	117,07	3,53
23900-111800***	118	2/3/4/4,5/5/6
23900-111920***	119,2	5,7
23900-112000***	120	2/2,5/3/4/4,5/5/6
23900-112002***	120,02	5,33/6,99
23900-112024***	120,24	3,53
23900-112032***	120,32	2,62

O-rings

Order No.	D1	D2
23900-112200* **	122	2/3/4
23900-112300* **	123	2,5/3/6
23900-112319* **	123,19	5,33/6,99
23900-112342* **	123,42	3,53
23900-112400* **	124	3/4
23900-112420* **	124,2	5,7
23900-112460* **	124,6	6,99
23900-112500* **	125	2/2,5/3,5/4/5/6
23900-112600* **	126	3/4/4,5/5
23900-112659* **	126,59	3,53
23900-112667* **	126,67	2,62
23900-112800* **	128	2/3/4/5/6
23900-112920* **	129,2	5,7
23900-112954* **	129,54	5,33/6,99
23900-112977* **	129,77	3,53
23900-113000* **	130	2/2,5/3/3,5/4/4,5/5/6
23900-113100* **	131	3,5
23900-113200* **	132	3/4/5
23900-113272* **	132,72	5,33/6,99
23900-113294* **	132,94	3,53
23900-113302* **	133,02	2,62
23900-113307* **	133,07	1,78
23900-113400* **	134	4
23900-113420* **	134,2	5,7
23900-113450* **	134,5	6,99
23900-113500* **	135	2,5/3/4/5/6
23900-113589* **	135,89	5,33/6,99
23900-113600* **	136	3/3,5/4
23900-113612* **	136,12	3,53
23900-113700* **	137	2,5
23900-113800* **	138	4
23900-113900* **	139	3
23900-113907* **	139,07	5,33/6,99
23900-113929* **	139,29	3,53
23900-113930* **	139,3	5,7
23900-113937* **	139,37	2,62
23900-113970* **	139,7	5,33
23900-114000* **	140	2/2,5/3/4/5/6
23900-114200* **	142	3/4/5/6
23900-114224* **	142,24	5,33/6,99
23900-114247* **	142,47	3,53
23900-114300* **	143	2/3/4
23900-114500* **	145	5/6
23900-114542* **	145,42	5,33/6,99
23900-114564* **	145,64	3,53
23900-114572* **	145,72	2,62
23900-114600* **	146	3/4
23900-114800* **	148	3/4/5/6

Order No.	D1	D2
23900-114859* **	148,59	5,33/6,99
23900-114882* **	148,82	3,53
23900-115000* **	150	2/2,5/3/4/4,5/5/6
23900-115177* **	151,77	5,33/6,99
23900-115199* **	151,99	3,53
23900-115200* **	152	3/3,5
23900-115207* **	152,07	2,62
23900-115300* **	153	3/4,5/6
23900-115600* **	156	3
23900-116000* **	160	3/4
23900-117000* **	170	4
23900-117500* **	175	2/3/3,5/4/5/6/8
23900-118600* **	186	3
23900-120500* **	205	5
23900-122184* **	221,84	3,53
23900-122500* **	225	5
23900-124500* **	245	3/4/5
23900-125000* **	250	3/3,5/4/4,5/5/6

Notes

Rotary shaft lip seals

DIN 3760

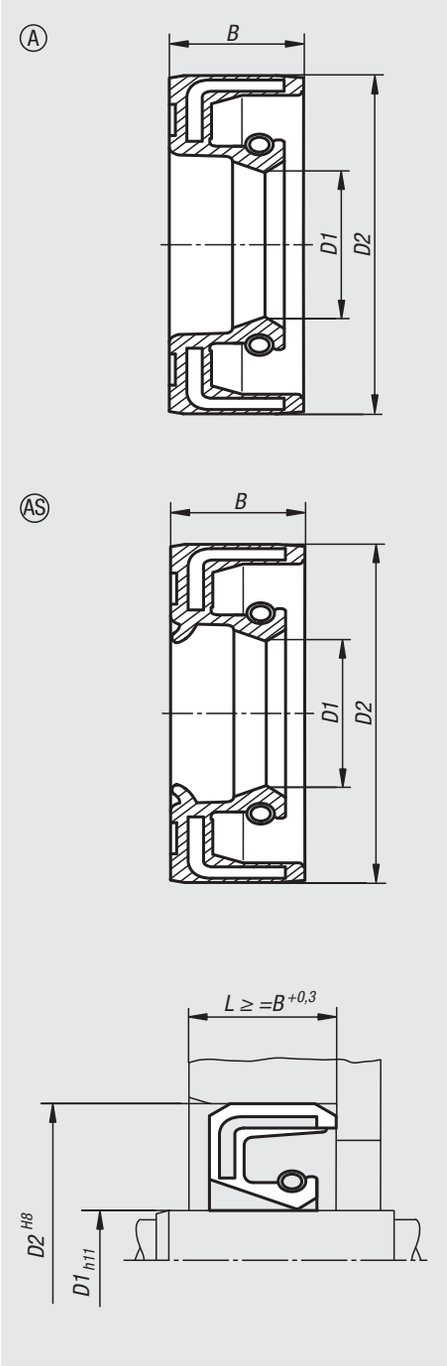

Material:
Elastomer NBR.
Brace ring and tension spring steel.

Version:
Shore ~70, black.

Sample order:
nlm 23915-11061605
(include dimension B e.g. 05 for B = 5 mm.)

Note:
Rotary shaft lip seals are ready-to-install seals for sealing rotating shafts. They are made from an elastomer outer sleeve and an internal bracing shim. The tension spring ensures increased pressure of the lip against the shaft and supports static sealing.

Form A: DIN 3760 (ISO 6194/1) version, smooth OD.
Form AS: DIN 3760 (ISO 6194/0) version, smooth OD with extra dust lip to protect from external dirt.

The material NBR has a high wear resistance and is resistant to motor fuels, oil, hydraulic oil and lubricating grease.

Operating limits:
Circumferential speed (m/s): ≤12
Pressure (MPa/bar): ≤0.05/0.5 (rotary shaft lip seals are generally meant for unpressurised operation).

Temperature range:
-40 °C to +100 °C.

Tolerances:
Housing:
Tolerance H8 is recommended.
Surface finish Ra 1.6 to 6.3 µm.

Shaft:
Tolerance h11 is recommended.
Surface finish Ra 0.2 to 0.8 µm.
The shaft hardness should be at least 45 HRC.

Rotary shaft lip seals

DIN 3760

Order No.	Form	D1	D2	B
23915-110616**	A	6	16	5/7
23915-110622**	A	6	22	7
23915-110722**	A	7	22	7
23915-110822**	A	8	22	7
23915-111019**	A	10	19	7
23915-111022**	A	10	22	7
23915-111024**	A	10	24	7
23915-111026**	A	10	26	7
23915-111219**	A	12	19	5
23915-111222**	A	12	22	5/6/7
23915-111224**	A	12	24	7
23915-111228**	A	12	28	7
23915-111230**	A	12	30	7
23915-111232**	A	12	32	7
23915-111424**	A	14	24	7
23915-111430**	A	14	30	7
23915-111524**	A	15	24	7
23915-111525**	A	15	25	5
23915-111526**	A	15	26	7
23915-111530**	A	15	30	7
23915-111532**	A	15	32	7
23915-111535**	A	15	35	7
23915-111540**	A	15	40	10
23915-111628**	A	16	28	7
23915-111630**	A	16	30	7
23915-111632**	A	16	32	7
23915-111635**	A	16	35	7
23915-111728**	A	17	28	7
23915-111729**	A	17	29	5
23915-111730**	A	17	30	7
23915-111732**	A	17	32	7
23915-111735**	A	17	35	7
23915-111740**	A	17	40	7/10
23915-111828**	A	18	28	7
23915-111830**	A	18	30	7
23915-111832**	A	18	32	7
23915-111835**	A	18	35	7
23915-111932**	A	19	32	7
23915-112030**	A	20	30	5/7
23915-112032**	A	20	32	7
23915-112035**	A	20	35	7/10
23915-112036**	A	20	36	7
23915-112040**	A	20	40	7
23915-112042**	A	20	42	7
23915-112047**	A	20	47	7/10
23915-112052**	A	20	52	7/10
23915-112232**	A	22	32	7
23915-112235**	A	22	35	7

Order No.	Form	D1	D2	B
23915-112238**	A	22	38	8
23915-112240**	A	22	40	7/10
23915-112247**	A	22	47	7
23915-112435**	A	24	35	7
23915-112437**	A	24	37	7
23915-112440**	A	24	40	7
23915-112535**	A	25	35	7
23915-112537**	A	25	37	5/7
23915-112538**	A	25	38	7
23915-112540**	A	25	40	5/7/8/10
23915-112542**	A	25	42	7/10
23915-112545**	A	25	45	10
23915-112547**	A	25	47	7/10
23915-112550**	A	25	50	10
23915-112552**	A	25	52	7/8/10
23915-112562**	A	25	62	7/10
23915-112637**	A	26	37	7
23915-112638**	A	26	38	7
23915-112647**	A	26	47	7
23915-112737**	A	27	37	7
23915-112838**	A	28	38	7
23915-112840**	A	28	40	7
23915-112842**	A	28	42	7/8
23915-112847**	A	28	47	7
23915-112852**	A	28	52	7/10
23915-113040**	A	30	40	7
23915-113042**	A	30	42	7/8
23915-113045**	A	30	45	7/8
23915-113047**	A	30	47	7/8/10
23915-113050**	A	30	50	7/10
23915-113052**	A	30	52	7/8/10
23915-113055**	A	30	55	7/10
23915-113062**	A	30	62	7/10
23915-113072**	A	30	72	10
23915-113242**	A	32	42	7
23915-113245**	A	32	45	7
23915-113247**	A	32	47	7
23915-113250**	A	32	50	8/10
23915-113252**	A	32	52	7
23915-113262**	A	32	62	10
23915-113345**	A	33	45	7
23915-113462**	A	34	62	10
23915-113545**	A	35	45	7
23915-113547**	A	35	47	7
23915-113550**	A	35	50	7/8/10
23915-113552**	A	35	52	7/8/10
23915-113555**	A	35	55	8/10

Rotary shaft lip seals

DIN 3760

Order No.	Form	D1	D2	B
23915-113556**	A	35	56	10
23915-113558**	A	35	58	10
23915-113562**	A	35	62	7/8/10
23915-113572**	A	35	72	10/12
23915-113580**	A	35	80	12
23915-113647**	A	36	47	7
23915-113650**	A	36	50	7
23915-113850**	A	38	50	7
23915-113852**	A	38	52	7
23915-113862**	A	38	62	10
23915-113872**	A	38	72	10
23915-114052**	A	40	52	7/8
23915-114055**	A	40	55	7/8
23915-114056**	A	40	56	8
23915-114058**	A	40	58	10
23915-114060**	A	40	60	10
23915-114062**	A	40	62	7/8/10
23915-114065**	A	40	65	10
23915-114068**	A	40	68	8/10
23915-114072**	A	40	72	7/10
23915-114080**	A	40	80	10
23915-114255**	A	42	55	7/8
23915-114262**	A	42	62	7/8/10
23915-114265**	A	42	65	10
23915-114272**	A	42	72	8/10
23915-114460**	A	44	60	10
23915-114462**	A	44	62	10
23915-114465**	A	44	65	10
23915-114558**	A	45	58	7
23915-114560**	A	45	60	7/8/10
23915-114565**	A	45	65	10/8
23915-114562**	A	45	62	8/10
23915-114572**	A	45	72	8/10
23915-114575**	A	45	75	8/10
23915-114580**	A	45	80	10
23915-114585**	A	45	85	10
23915-114862**	A	48	62	8
23915-114865**	A	48	65	10
23915-114872**	A	48	72	7/8/10
23915-115062**	A	50	62	7
23915-115065**	A	50	65	8/10
23915-115068**	A	50	68	8/10
23915-115070**	A	50	70	10
23915-115072**	A	50	72	8/10/12
23915-115075**	A	50	75	10

Order No.	Form	D1	D2	B
23915-115080**	A	50	80	8/10
23915-115085**	A	50	85	10
23915-115090**	A	50	90	10
23915-120616**	AS	6	16	5/7
23915-120622**	AS	6	22	7
23915-120822**	AS	8	22	7
23915-121019**	AS	10	19	7
23915-121022**	AS	10	22	7
23915-121024**	AS	10	24	7
23915-121026**	AS	10	26	7
23915-121219**	AS	12	19	5
23915-121222**	AS	12	22	5/6/7
23915-121224**	AS	12	24	7
23915-121228**	AS	12	28	7
23915-121230**	AS	12	30	7
23915-121232**	AS	12	32	7
23915-121424**	AS	14	24	7
23915-121430**	AS	14	30	7
23915-121524**	AS	15	24	7
23915-121525**	AS	15	25	5
23915-121526**	AS	15	26	7
23915-121530**	AS	15	30	7
23915-121532**	AS	15	32	7
23915-121535**	AS	15	35	7
23915-121628**	AS	16	28	7
23915-121630**	AS	16	30	7
23915-121632**	AS	16	32	7
23915-121728**	AS	17	28	7
23915-121730**	AS	17	30	7
23915-121735**	AS	17	35	7
23915-121740**	AS	17	40	7
23915-121828**	AS	18	28	7
23915-121832**	AS	18	32	7
23915-121835**	AS	18	35	7
23915-121930**	AS	19	30	7
23915-121932**	AS	19	32	7
23915-122030**	AS	20	30	5/7
23915-122032**	AS	20	32	7
23915-122035**	AS	20	35	7/10
23915-122036**	AS	20	36	7
23915-122040**	AS	20	40	7
23915-122042**	AS	20	42	7
23915-122047**	AS	20	47	7/10
23915-122052**	AS	20	52	7/10
23915-122232**	AS	22	32	7
23915-122235**	AS	22	35	7

Rotary shaft lip seals

DIN 3760

Order No.	Form	D1	D2	B
23915-122238**	AS	22	38	8
23915-122240**	AS	22	40	7/10
23915-122247**	AS	22	47	7
23915-122435**	AS	24	35	7
23915-122440**	AS	24	40	7
23915-122535**	AS	25	35	7
23915-122537**	AS	25	37	7
23915-122538**	AS	25	38	7
23915-122540**	AS	25	40	5/7/8/10
23915-122542**	AS	25	42	7/10
23915-122545**	AS	25	45	10
23915-122547**	AS	25	47	7/10
23915-122550**	AS	25	50	10
23915-122552**	AS	25	52	7/8/10
23915-122562**	AS	25	62	10
23915-122637**	AS	26	37	7
23915-122647**	AS	26	47	7
23915-122737**	AS	27	37	7
23915-122838**	AS	28	38	7
23915-122840**	AS	28	40	7
23915-122842**	AS	28	42	7/8
23915-122847**	AS	28	47	7
23915-122852**	AS	28	52	7/10
23915-123040**	AS	30	40	7
23915-123042**	AS	30	42	7/8
23915-123045**	AS	30	45	8
23915-123046**	AS	30	46	7
23915-123047**	AS	30	47	7/8/10
23915-123050**	AS	30	50	7/10
23915-123052**	AS	30	52	7/8/10
23915-123055**	AS	30	55	7/10
23915-123062**	AS	30	62	7/10
23915-123072**	AS	30	72	10
23915-123242**	AS	32	42	7
23915-123245**	AS	32	45	7
23915-123247**	AS	32	47	7
23915-123250**	AS	32	50	8
23915-123252**	AS	32	52	7
23915-123262**	AS	32	62	10
23915-123547**	AS	35	47	7
23915-123550**	AS	35	50	8/10
23915-123552**	AS	35	52	7/8
23915-123555**	AS	35	55	8/10
23915-123558**	AS	35	58	10
23915-123562**	AS	35	62	7/8/10

Order No.	Form	D1	D2	B
23915-123572**	AS	35	72	10
23915-123580**	AS	35	80	12
23915-123647**	AS	36	47	7
23915-123650**	AS	36	50	7
23915-123652**	AS	36	52	7
23915-123850**	AS	38	50	7
23915-123852**	AS	38	52	7
23915-123855**	AS	38	55	7
23915-123862**	AS	38	62	10
23915-123872**	AS	38	72	10
23915-124052**	AS	40	52	7
23915-124055**	AS	40	55	7/8
23915-124056**	AS	40	56	8
23915-124058**	AS	40	58	10
23915-124060**	AS	40	60	10
23915-124062**	AS	40	62	7/8/10
23915-124065**	AS	40	65	10
23915-124068**	AS	40	68	10
23915-124072**	AS	40	72	7/10
23915-124080**	AS	40	80	10
23915-124255**	AS	42	55	7/8
23915-124262**	AS	42	62	7/8/10
23915-124272**	AS	42	72	8
23915-124558**	AS	45	58	7
23915-124560**	AS	45	60	8/10
23915-124565**	AS	45	65	10/8
23915-124562**	AS	45	62	8/10
23915-124572**	AS	45	72	10
23915-124575**	AS	45	75	8/10
23915-124580**	AS	45	80	10
23915-124585**	AS	45	85	10
23915-124862**	AS	48	62	8
23915-124865**	AS	48	65	10
23915-124872**	AS	48	72	7/8/10
23915-125062**	AS	50	62	7
23915-125065**	AS	50	65	8/10
23915-125068**	AS	50	68	8/10
23915-125070**	AS	50	70	10
23915-125072**	AS	50	72	8/10/12
23915-125075**	AS	50	75	10
23915-125080**	AS	50	80	8/10
23915-125085**	AS	50	85	10
23915-125090**	AS	50	90	10

Notes

24000

Trapezoidal thread spindles
Ball screw linear actuators
Pillow block bearings

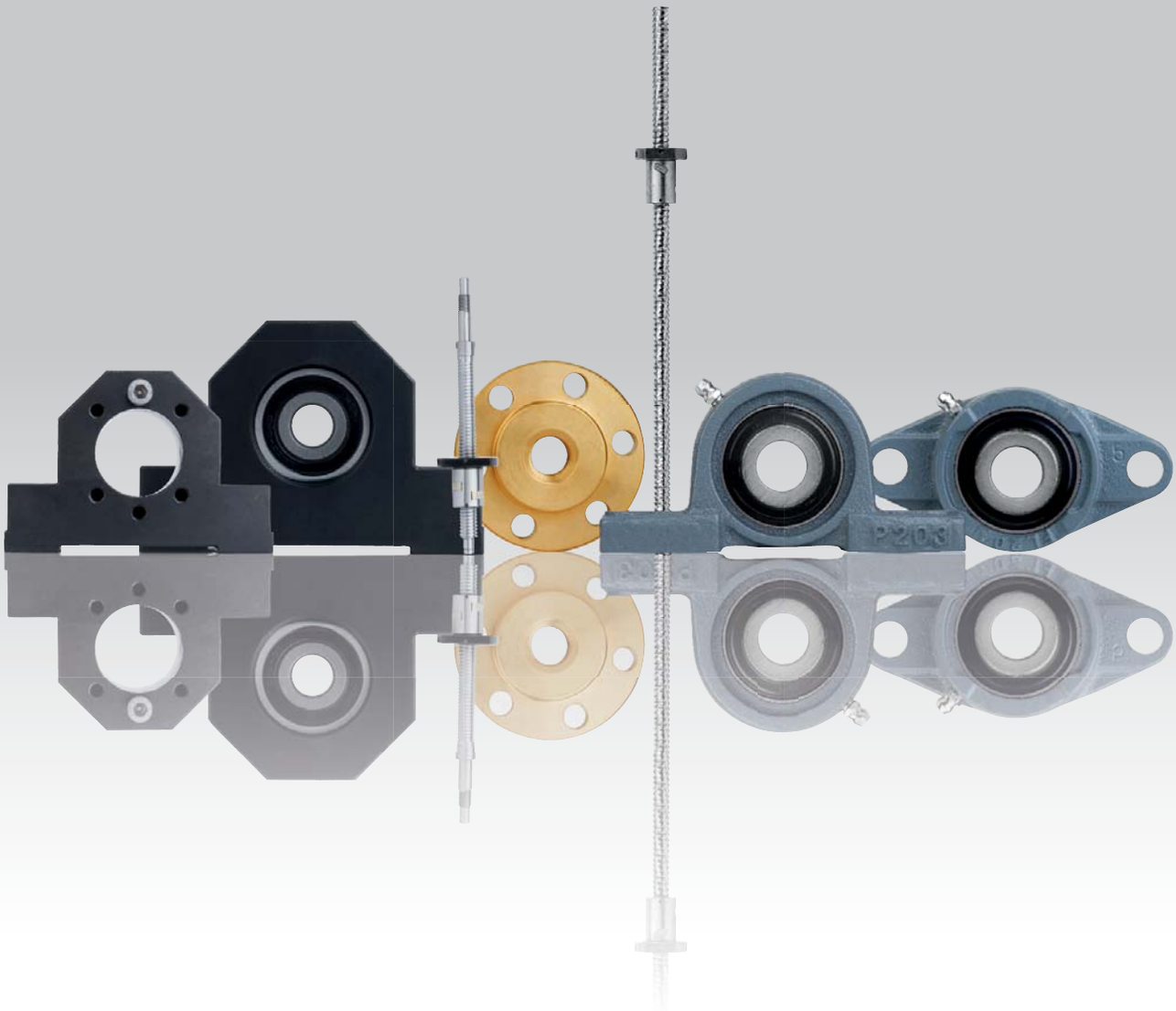

Trapezoidal rolled thread spindles

RH thread, single-start

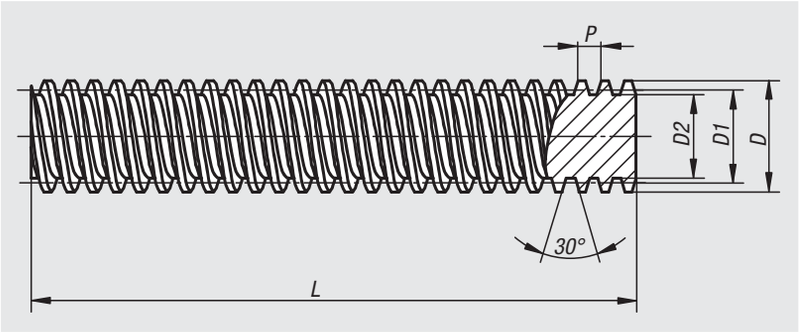

Material:
Steel 1.0401 (C15).

Version:
Rolled, bright.

Sample order:
nlm 24000-100311X1000

Note:
Trapezoidal threads are transmission threads with relatively high friction. Standard thread forms are self-locking, which has the advantage that they generally do not need to be secured in the rest position.

DIN 103 (apart from pitch Tr 10x3)
Tolerance class 7e
Pitch precision 0.3/300 mm

Order No.	DxP	D1 min.	D1 max.	D2	L
24000-100311X1000	Tr 10x3	8,191	8,415	5,84	1000
24000-120311X1000	Tr 12x3	10,191	10,415	7,84	1000
24000-160411X1000	Tr 16x4	13,64	13,905	10,8	1000
24000-200411X1000	Tr 20x4	17,64	17,905	14,8	1000
24000-240511X1000	Tr 24x5	21,094	21,394	17,5	1000
24000-260511X1000	Tr 26x5	23,094	23,394	19,5	1000
24000-300611X1000	Tr 30x6	26,547	26,882	21,9	1000

Trapezoidal thread round nuts

RH thread, single-start

Material:
Gunmetal Rg7

Version:
Bright.

Sample order:
nlm 24003-1003132

Note:
For low and medium speed linear actuators. By inadequate lubrication, gunmetal trapezoidal thread nuts have good dry-running properties on steel spindles.

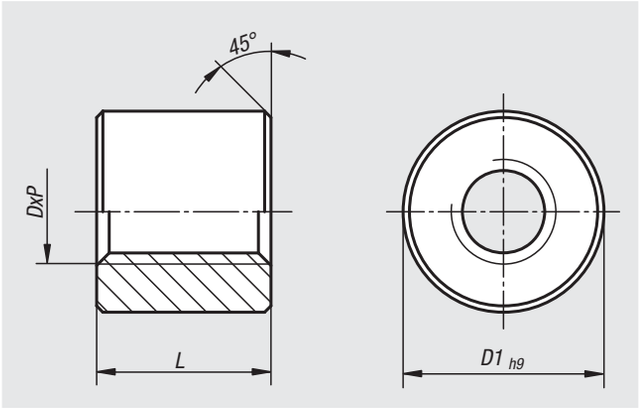

Tolerance class 7H.

Order No.	DxP	D1	L
24003-1003132	Tr 10x3	22	20
24003-1203132	Tr 12x3	26	24
24003-1604132	Tr 16x4	36	32
24003-2004132	Tr 20x4	45	40
24003-2405132	Tr 24x5	50	48
24003-2605132	Tr 26x5	50	48
24003-3006132	Tr 30x6	60	60

Trapezoidal thread flange nuts

RH thread, single-start

Material:
Gunmetal Rg7

Version:
Bright.

Sample order:
nlm 24005-160411

Note:
For low and medium speed linear actuators. By inadequate lubrication, gunmetal trapezoidal thread nuts have good dry-running properties on steel spindles.

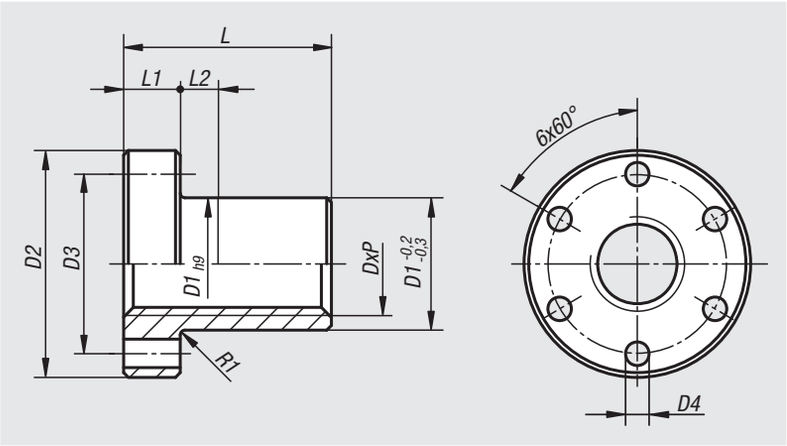

Tolerance class 7H.

Order No.	DxP	D1	D2	D3	D4	L	L1	L2
24005-100313	Tr 10x3	25	42	34	5	15	10	5
24005-120313	Tr 12x3	28	48	38	6	18	12	6
24005-160413	Tr 16x4	28	48	38	6	24	12	8
24005-200413	Tr 20x4	32	55	45	7	30	12	8
24005-240513	Tr 24x5	32	55	45	7	36	12	8
24005-260513	Tr 26x5	38	62	50	7	39	14	8
24005-300613	Tr 30x6	38	62	50	7	45	14	8

Technical information for ball screw linear actuators

Efficiency and self-locking:
The low rolling friction of ball screw linear actuators give them a mechanical efficiency of up to 95%. Operating duration can be 100%. Due to low rolling friction ball screw linear actuators are not self-locking. A brake mechanism must be installed where self-locking is required (reduction gear or motor brake). This is a must by vertical installations.

Operating temperature:
Ball screw linear actuators can be used with normal loads within a temperature range of -20 to +80 °C. Temporarily up to +110 °C. A prerequisite is constant lubrication.

Lubrication:
Correct lubrication is important for ball screw linear actuators to achieve the calculated lifespan, avoid overheating and guarantee smooth and quiet operation. The same lubricants are used for ball screw linear actuators as those used for roller bearings. They should always be protected from dirt. This is normally carried out by the wiper in the ball screw nut. This wiper also prevents the lubricant seeping out of the ball screw nut.

Installation information:
When ordering ball screw nuts individually, they come mounted on a sleeve. This sleeve must not be removed prior to installation, as the balls could fall out of the ball screw nut. To install (Fig. 1), hold the sleeve on the end of the spindle, then slide the nut over the sleeve while simultaneously and without force twisting onto the spindle thread. Now the lubrication should be applied through the hole in the ball screw nut. To avoid damaging the ball screw linear actuator, limit switches and end position dampers should be installed on the machine.

Fig. 1

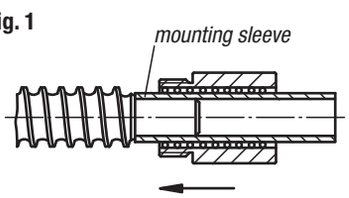

Note:
Ball screw linear actuators consist of a ball screw spindle, a ball screw nut in which the balls are integrated and a ball re-circulator. They are used to convert a rotary motion into a linear motion and vice-versa. They are very accurate and highly efficient.

Manufacturing process:
The rolled threads of ball screw linear actuators are produced by a precision rolling process. The thread on the spindle and nut has a Gothic arch profile. The load angle is 45°. As by precision screw drives, the flank of the spindle nut is ground to give smooth running properties and a long life.

Gradient deviations:

Thread length		Precision class			
over	under	C 3 (µm)	C 5 (µm)	C 7 (µm)	C 10 (µm)
0	315	8	18	±50 / 300 mm	±210 / 300 mm
315	500	10	20		
500	630	12	23		
630	800	13	25		
800	1000	15	27		
1000	1250	16	30		
1250	1600	18	35		
1600	2000	21	40		
2000	2500	24	46		
2500	3150	29	54		
3150	4000	35	65		
4000	5000	41	77		

Axial backlash and preload:
Differentiation is made between a play-afflicted (axial play > 0) and a play-free or preloaded (axial play < 0) ball screw linear actuator. Preloaded nuts have considerably less elastic deformation occurrence than in nuts without preloading. Preloaded nuts are recommended when positioning accuracy under load is required.

Spindle Ø	Axial backlash P0 (mm)	Zero backlash P1 (mm)	Light preload P2 single nut loosening torque N
16x5	0,08	0	1 - 3
20x5			1 - 3
25x5			2 - 5
32x5			2 - 5
32x10			3 - 6

Assessment of the lifespan:
The lifespan can be calculated from the ratio of dynamic load rating and average load.

$$L = \left(\frac{C_{dyn}}{F_m}\right)^3 \cdot 10^6$$

L = lifespan in rotations
C_{dyn} = dynamic load rating (N)
F_m = average load (N)

Ball screw linear actuators

rolled, with flange nut DIN 69051 Part 5

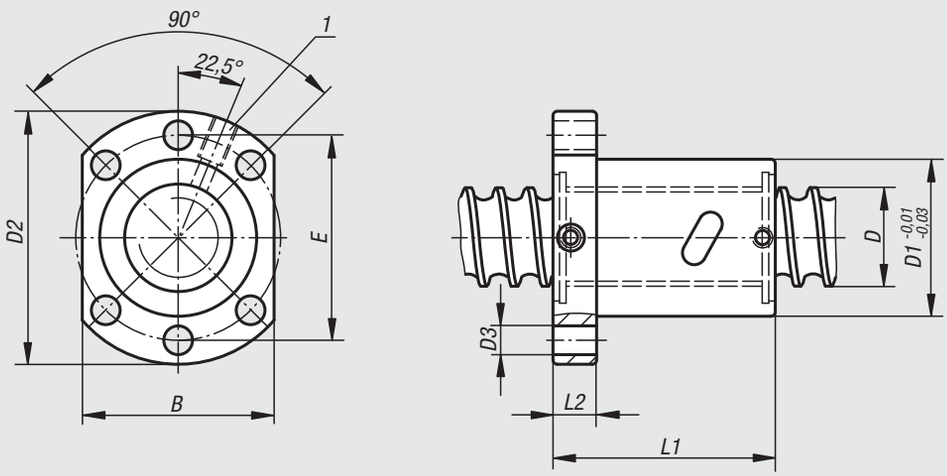

Material:
Spindle, steel 1.1213.
Nut steel 1.3505.
Wiper plastic.

Version:
Spindle rolled, induction hardened to 62 ±2 HRC and polished.
Nut ground, flank induction hardened to 62 ±2 HRC and polished.

Sample order:
nlm 24055-16052X0600
(include total length L)
For spindle end form a detailed customer drawing is required.

Note:
Ball screw linear actuators with Gothic arch profile and 5 mm or 10 mm pitch. Single-start, right-hand. Ball screw flange nut acc. to DIN 69051 Part 5 with flange.
Manufactured acc. to precision class C7 (tolerance ±50 µ / 300 mm).
Without preloading with axial backlash P0 (max. 0.08 mm)

On request:
We can produce ball screw spindles to your design from a detailed drawing.
Max. production lengths 5600 mm.

Other precision classes and preloading are available (see technical information).

Attention:
The flange nut must not be removed from the spindle without a mounting aid as the balls will fall out.

Drawing reference:
1) M6 lubrication hole

Example of shaft machining:

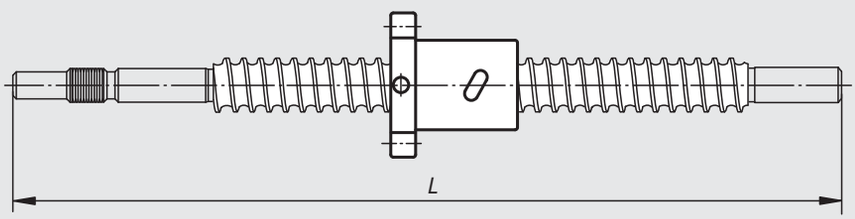

Order No.	D	D1	Pitch	D2	D3	B	E	L1	L2	Ball-Ø	No. of support circulations	Dynamic load rating N	Static load rating N	Stiffness K (N/µm)
24055-16052X	16	28	5	48	5,5	40	38	50	10	3,175	4	8880	15250	200
24055-20052X	20	36	5	58	6,6	44	47	51	10	3,175	4	9990	19950	250
24055-25052X	25	40	5	62	6,6	48	51	51	10	3,175	4	11190	25810	350
24055-32052X	32	50	5	80	9	62	65	52	12	3,175	4	12640	34030	400
24055-32102X	32	50	10	80	9	62	65	85	12	6,35	4	30930	61020	400

Ball screw linear actuators

rolled, with screw-in cylinder nut

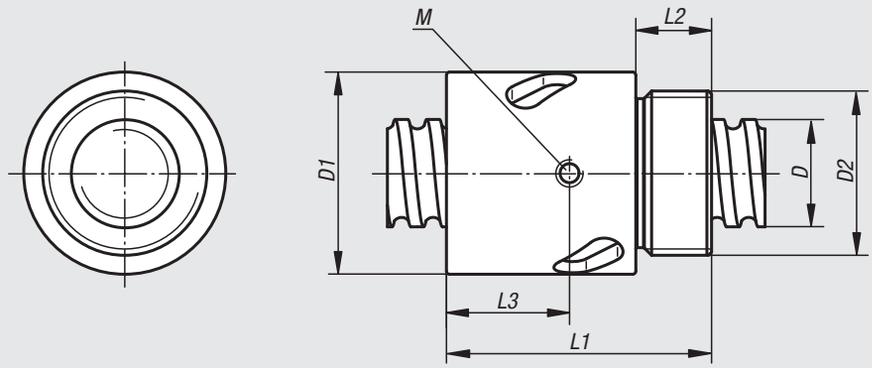

Material:
Spindle steel 1.1213.
Nut steel 1.3505.
Wiper plastic.

Version:
Spindle rolled, induction hardened to 62 ±2 HRC and polished.
Nut ground, flank induction hardened to 62 ±2 HRC and polished.

Sample order:
nlm 24060-16052X0600
(include total length L)
For spindle end form a detailed customer drawing is required.

Note:
Ball screw linear actuators with Gothic arch profile and 5 mm or 10 mm pitch. Single-start, right-hand. Ball screw cylinder nut with screw-in thread acc. to ISO 3408 (DIN 69051).
Manufactured acc. to precision class C7 (tolerance ±50 µ / 300 mm). Without preloading with axial backlash P0 (max. 0.08 mm).

On request:
We can make ball screw spindles to your design from a detailed drawing.
Max. production lengths 5600 mm.

Other precision classes and preloading are available (see technical information).

Attention:
The nut must not be removed from the spindle without a mounting aid as the balls will fall out.

Drawing reference:
M) lubrication hole

Example of shaft machining:

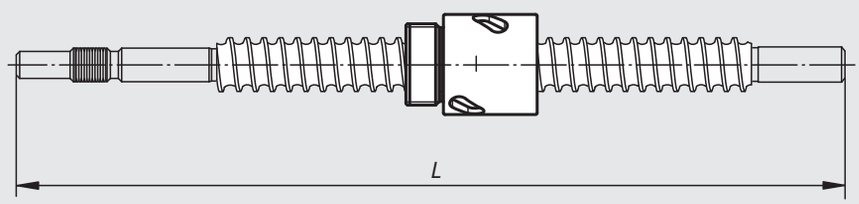

Order No.	D	Pitch	D1	D2	L1	L2	L3	M	Ball-Ø	No. of support circulations	Dynamic load rating N	Static load rating N	Stiffness K (N/µm)
24060-16052X	16	5	32,5	M26x1,5	42	12	-	-	3,175	4	8880	15250	200
24060-20052X	20	5	38	M35x1,5	45	15	-	-	3,175	4	9990	19950	250
24060-25052X	25	5	43	M40x1,5	69	19	32	M6	3,175	4	11190	25810	350

Housings

for flange nuts

Material:
Steel.

Version:
Black oxidised.

Sample order:
nlm 24070-016

Note:
The housings are suitable for installing flange nuts acc. to DIN 69051 Part 5. The axis height of the spindle bearings is matched to the fixed bearing units 24072 and floating bearing units 24074. The housings can be screwed on from above or below and pinned with two taper pins or cylindrical pins.

Supplied with 6 fastening screws grade 8.8.

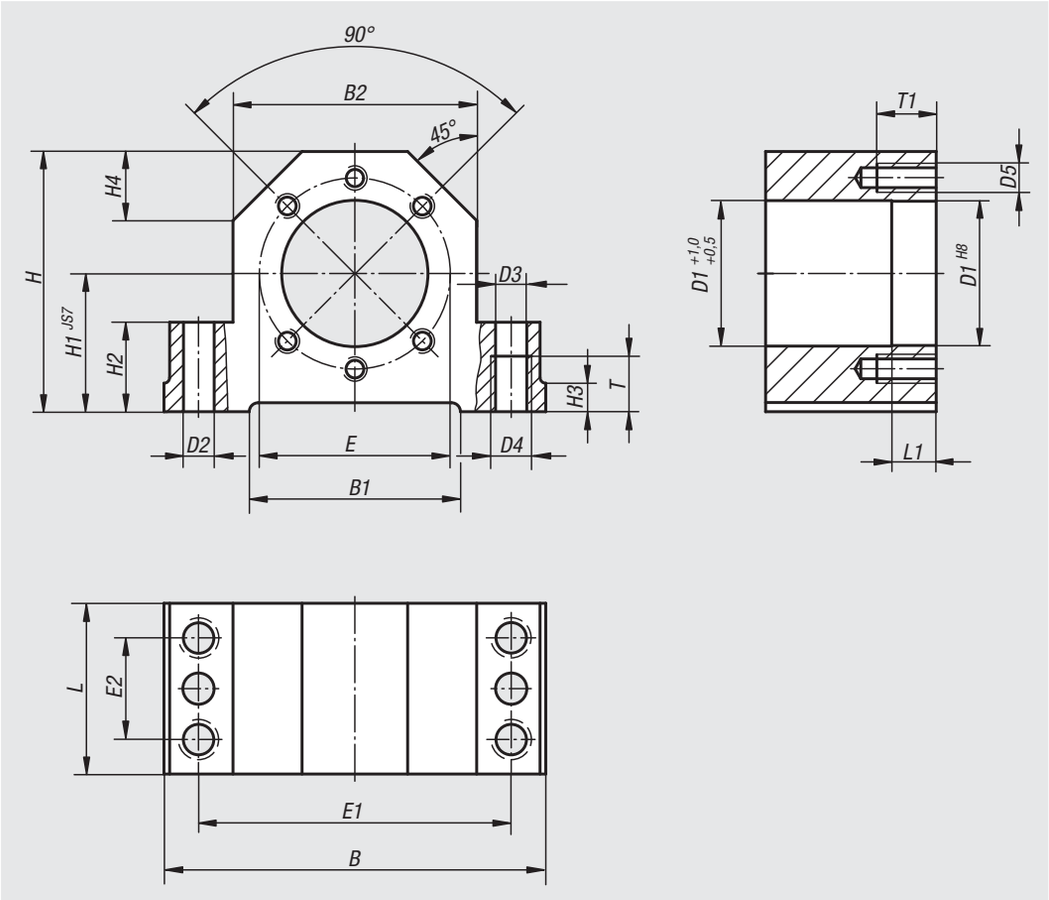

Ball screw linear actuator with flange nut installed in a housing

Order No.	Suitable for spindel Ø	B	B1	B2	D1	D2	D3	D4	D5	E	E1	E2	H	H1	H2	H3	H4	L	L1	T	T1
24070-016	16	86	50	52	28	7,7	8,4	M10	M5	38	68	23	58	32	22	7	15	42	10	15	12
24070-020	20	94	58	60	36	7,7	8,4	M10	M6	47	77	25	64	34	22	7	17	46	16	15	15
24070-025	25	108	63	66	40	9,7	10,5	M12	M6	51	88	29	72	39	27	10	19	46	16	18	15
24070-032	32	112	70	72	50	9,7	10,5	M12	M8	65	92	29	82	42	27	10	19	49	16	18	20

Fixed bearing units

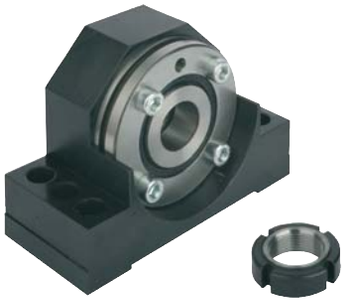

Material:
Housing steel.

Version:
Housing black oxidised.

Sample order:
nlm 24072-010

Note:
The axis height of the spindle bearings is matched to the floating bearing units 24074 and the housings for flange nuts 24070. The housings may be screwed on from above or below and pinned with two taper pins or cylindrical pins. Reference faces on both sides ease unit alignment.

Ready to install fixed bearing units with double row preloaded high-accuracy bearings and a 60° thrust angle. They accept both radial and axial forces from both directions and, due to preloading provide for highest rigidity, concentricity, precise tool positioning and repeatability.

Drawing reference:
1) angular-contact thrust ball bearing
2) M slotted nut

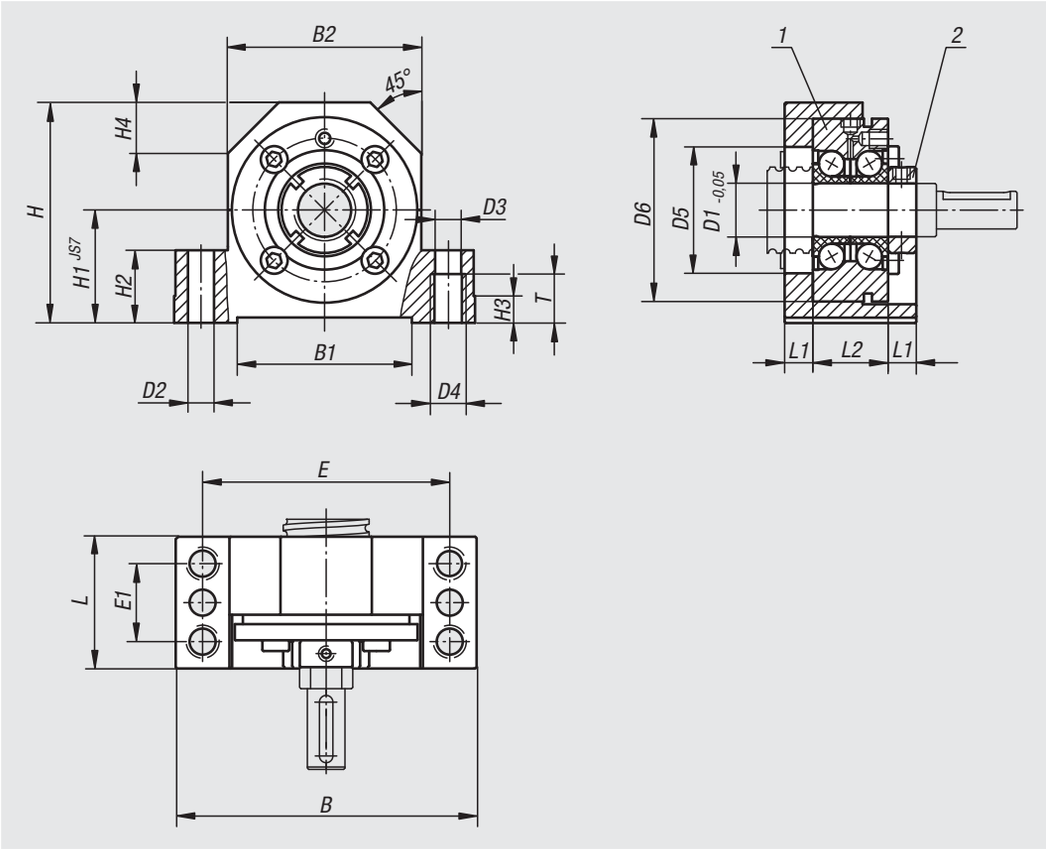

Order No.	Suitable for spindel Ø	B	B1	B2	D1	D2	D3	D4	D5	D6	E	E1	H	H1	H2	H3	H4	L	L1	L2	M	T
24072-010	16	86	50	52	10	7,7	8,4	M10	32	50	68	23	58	32	22	7	15	37	8,5	20	M10x1	15
24072-012	20	94	58	60	12	7,7	8,4	M10	32	55	77	25	64	34	22	7	17	42	8,5	25	M12x1	15
24072-015	20	108	63	66	15	9,7	10,5	M12	32	60	88	29	72	39	27	10	19	46	10,5	25	M15x1	18
24072-017	25	108	63	66	17	9,7	10,5	M12	36	62	88	29	72	39	27	10	19	46	10,5	25	M17x1	18
24072-020	32	112	70	72	20	9,7	10,5	M12	43	68	92	29	78	42	27	10	20	49	10,5	28	M20x1	18

Order No.	Dynamic load rating N	Static load rating N	Stiffness K (N/µm)
24072-010	13400	18800	325
24072-012	16900	24700	375
24072-015	17900	28000	400
24072-017	18800	31000	450
24072-020	26000	47000	650

Floating bearing units

Material:
Housing steel.

Version:
Housing black oxidised.

Sample order:
nlm 24074-010

Note:
The axis height of the spindle bearings is matched to the fixed bearing units 24072 and the housings for flange nuts 24070. The housings may be screwed on from above or below. Reference faces on both sides ease unit alignment.

Ready to install floating bearing units with deep groove ball bearings.

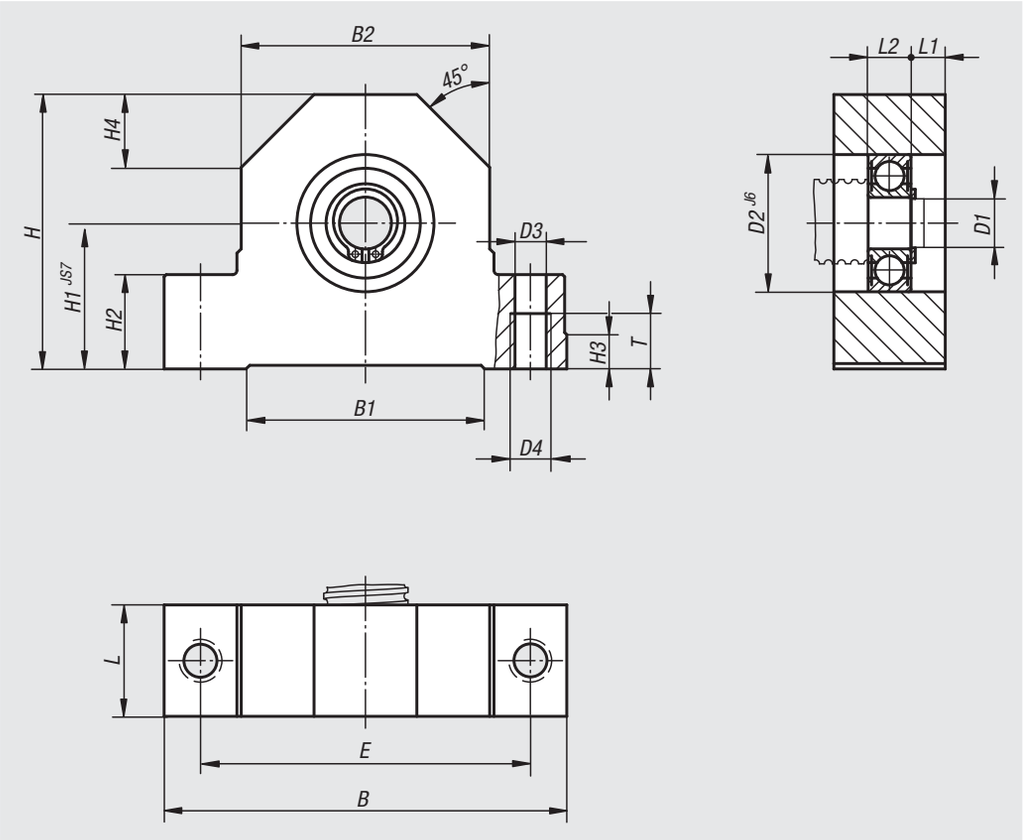

Order No.	Suitable for spindel Ø	B	B1	B2	D1	D2	D3	D4	E	H	H1	H2	H3	H4	L	L1	L2	T
24074-010	16	86	50	52	10	30	8,4	M10	68	58	32	22	7	15	24	7,5	9	15
24074-012	20	94	58	60	12	32	8,4	M10	77	64	34	22	7	17	26	8	10	15
24074-015	20	108	63	66	15	35	10,5	M12	88	72	39	27	10	19	28	8	12	18
24074-017	25	108	63	66	17	35	10,5	M12	88	72	39	27	10	19	28	8	12	18
24074-020	32	112	70	72	20	47	10,5	M12	92	78	42	27	10	20	34	10	14	18

Fixed bearing units

block version

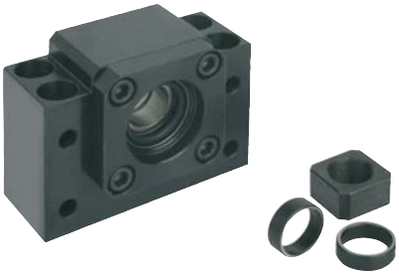

Material:
Housing steel.

Version:
Housing black oxidised.

Sample order:
nlm 24076-010

Note:
The axis height of the spindle bearings is matched to the floating bearing unit 24078. The fixed bearing units are composed of a housing with 2 angular contact thrust ball bearings with seals. Preloaded by a an initial flange. With backstops and a locknut.

Drawing reference:
1) C for socket head screw ISO 4762
2) M slotted nut

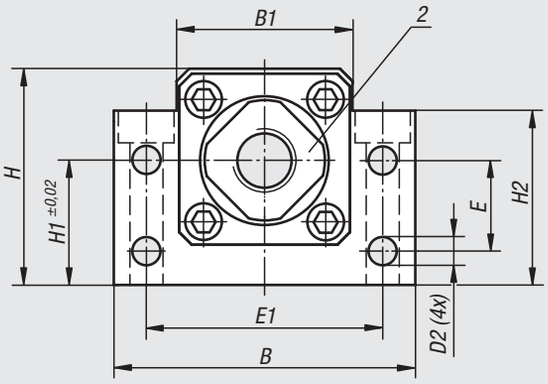

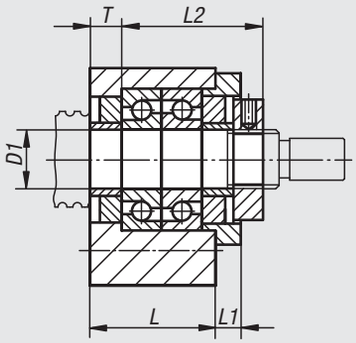

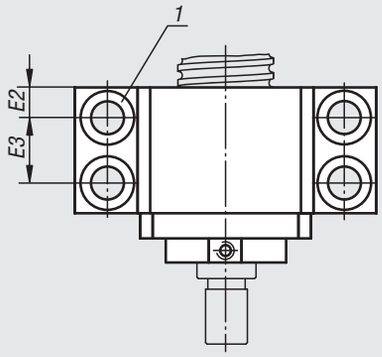

A block version bearing unit assembly

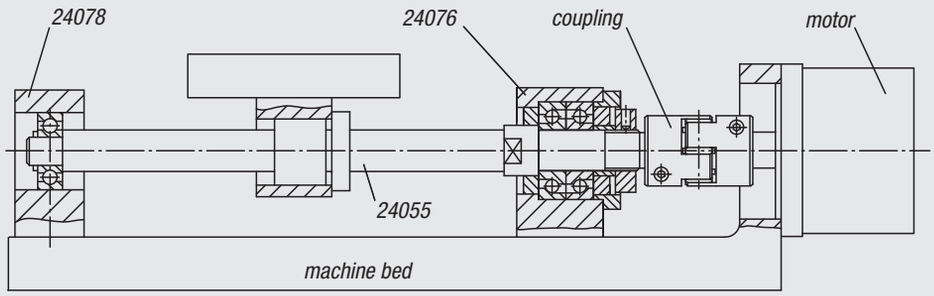

Order No.	Size	B	B1	C	D1	D2	E	E1	E2	E3	H	H1	H2	L	L1	L2	M	T
24076-010	10	60	34	M6	10	5,5	15	46	6	13	39	22	32,5	25	5	29	M10x1	5
24076-012	12	60	35	M6	12	5,5	18	46	6	13	43	25	35	25	5	29	M12x1	5
24076-015	15	70	40	M6	15	5,5	18	54	6	15	48	28	38	27	9	32	M15x1	6
24076-017	17	86	50	M8	17	6,6	28	68	8	19	64	39	55	35	8	44	M17x1	7
24076-020	20	88	52	M8	20	6,6	22	70	8	19	60	34	50	35	8	43	M20x1	8

Order No.	Dynamic load rating N	Static load rating N	Stiffness K (N/µm)
24076-010	6500	2800	95
24076-012	7000	3100	102
24076-015	7500	3500	114
24076-017	13000	5900	120
24076-020	16100	8400	145

Floating bearing units

block version

Material:
Housing steel.

Version:
Housing black oxidised.

Sample order:
nlm 24078-010

Note:
The axis height of the spindle bearings is matched with the fixed bearing unit 24076. The floating bearing units consist of a housing with deep grooved ball bearing which adapts axially to the linear expansion of the spindle.

Drawing reference:
1) C for socket head screw ISO 4762

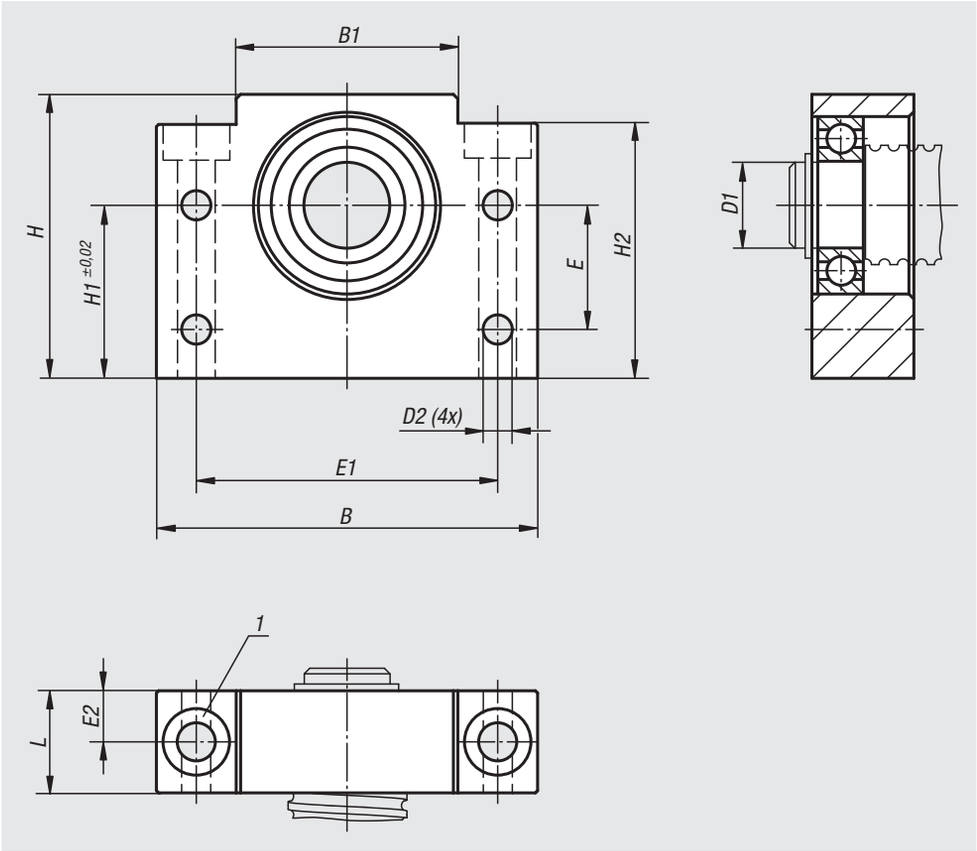

Order No.	Size	B	B1	C	D1	D2	E	E1	E2	H	H1	H2	L
24078-010	10	60	34	M6	8	5,5	15	46	10	39	22	32,5	20
24078-012	12	60	34	M6	10	5,5	18	46	10	43	25	35	20
24078-015	15	70	40	M6	15	5,5	18	54	10	48	28	38	20
24078-017	17	86	50	M8	17	6,6	28	68	11,5	64	39	55	23
24078-020	20	88	52	M8	20	6,6	22	70	13	60	34	50	26

Order No.	Dynamic load rating N	Static load rating N
24078-010	3250	1400
24078-012	4550	1960
24078-015	5600	2840
24078-017	9500	4750
24078-020	9300	5000

Fixed bearing units

flange version

Material:
Housing steel.

Version:
Housing black oxidised.

Sample order:
nlm 24080-010

Note:
The fixed bearing unit is matched to the floating bearing unit 24082. The fixed bearing units are composed of a housing with 2 angular contact thrust ball bearings and seals. Preloaded with an initial flange. With backstops and a locknut.

Drawing reference:
1) C for socket head screw ISO 4762
2) M slotted nut

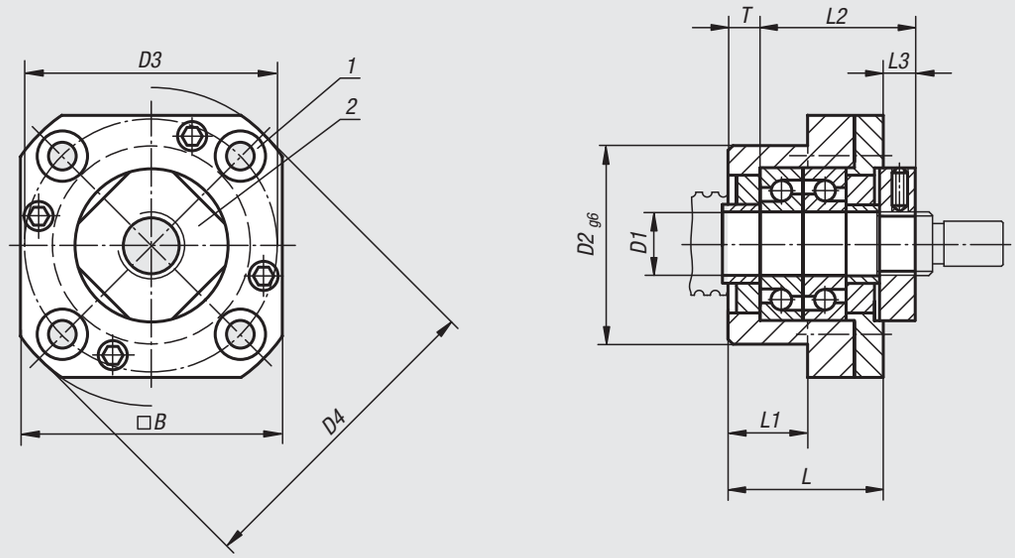

Bearing units fastened from outside

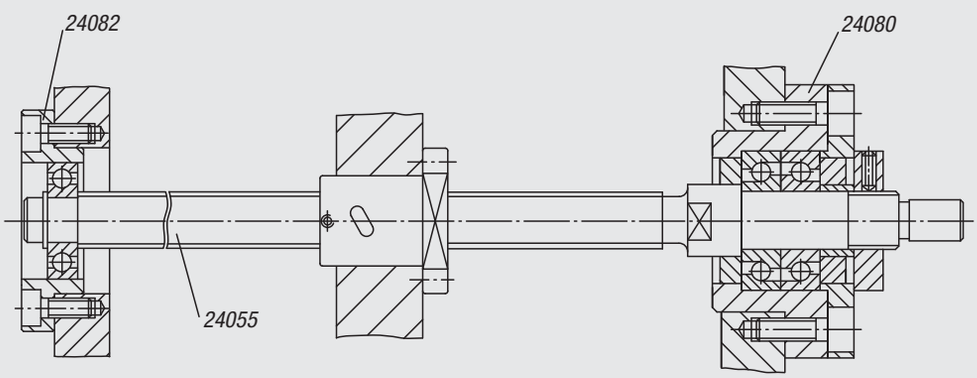

Order No.	Size	B	C	D1	D2	D3	D4	L	L1	L2	L3	M	T
24080-010	10	42	M4	10	34	42	52	27	17	29,5	7,5	M10x1	5
24080-012	12	44	M4	12	36	44	54	27	17	29,5	7,5	M12x1	5
24080-015	15	52	M5	15	40	50	63	32	17	36	8	M15x1	6
24080-020	20	68	M6	20	57	70	85	52	30	50	10	M20x1	10

Order No.	Dynamic load rating N	Static load rating N	Stiffness K (N/µm)
24080-010	6500	2800	95
24080-012	7000	3100	102
24080-015	7500	3500	114
24080-020	17500	8400	145

Floating bearing units

flange version

Material:
Housing steel.

Version:
Housing black oxidised.

Sample order:
nlm 24082-010

Note:
The floating bearing unit is matched with the fixed bearing unit 24080. The floating bearing units consist of a housing with deep groove ball bearing which adapts axially to the linear expansion of the spindle.

Drawing reference:
1) C for socket head screw ISO 4762

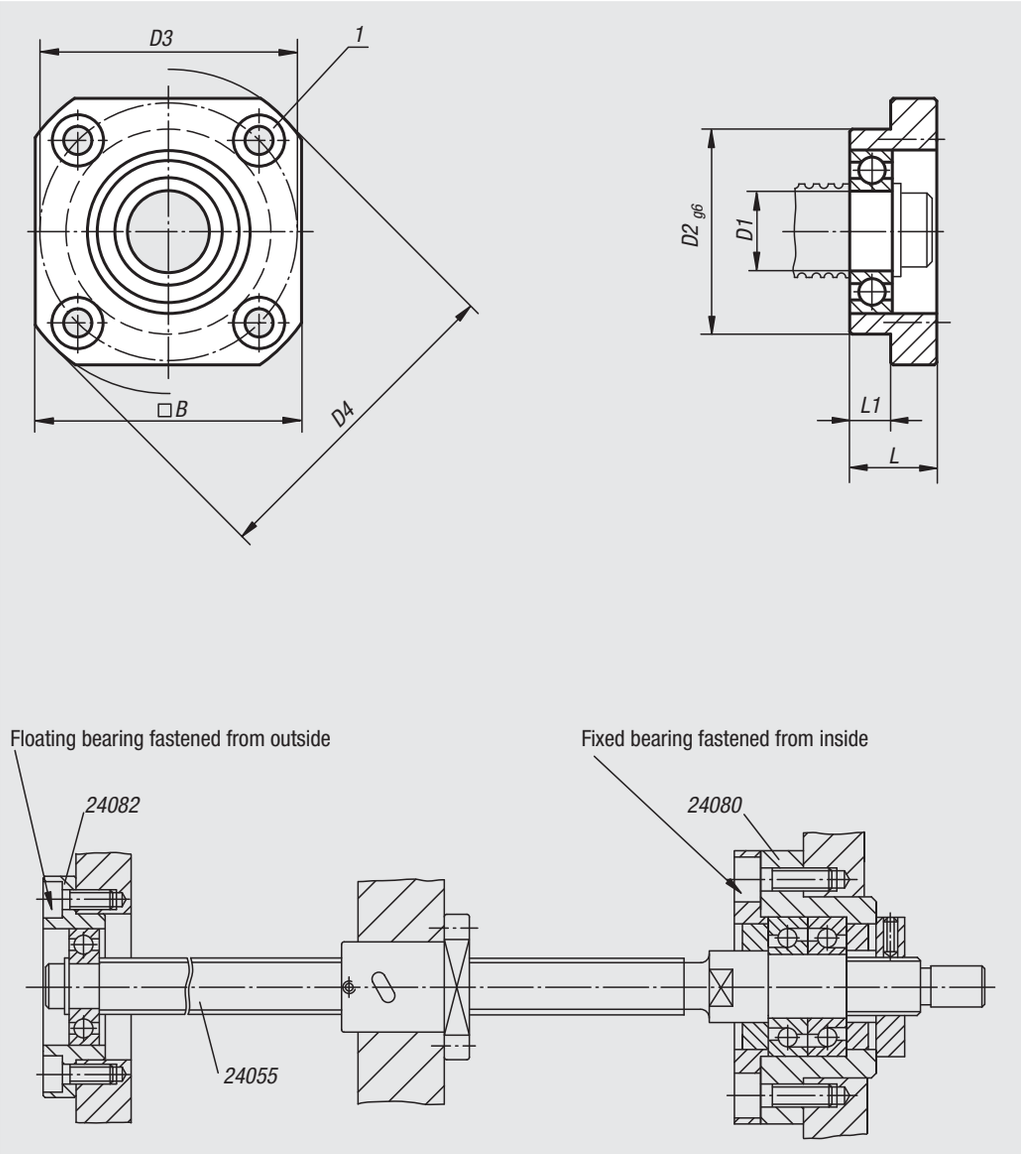

Order No.	Size	B	C	D1	D2	D3	D4	L	L1
24082-010	10	35	M3	8	28	35	43	12	5
24082-012	12	42	M4	10	34	42	52	15	8
24082-015	15	52	M5	15	40	50	63	17	8
24082-020	20	68	M6	20	57	70	85	20	9

Order No.	Dynamic load rating N	Static load rating N
24082-010	3250	1400
24082-012	4550	1960
24082-015	5600	2840
24082-020	9300	5000

Miniature ball screw linear actuators

ground, with flange nut

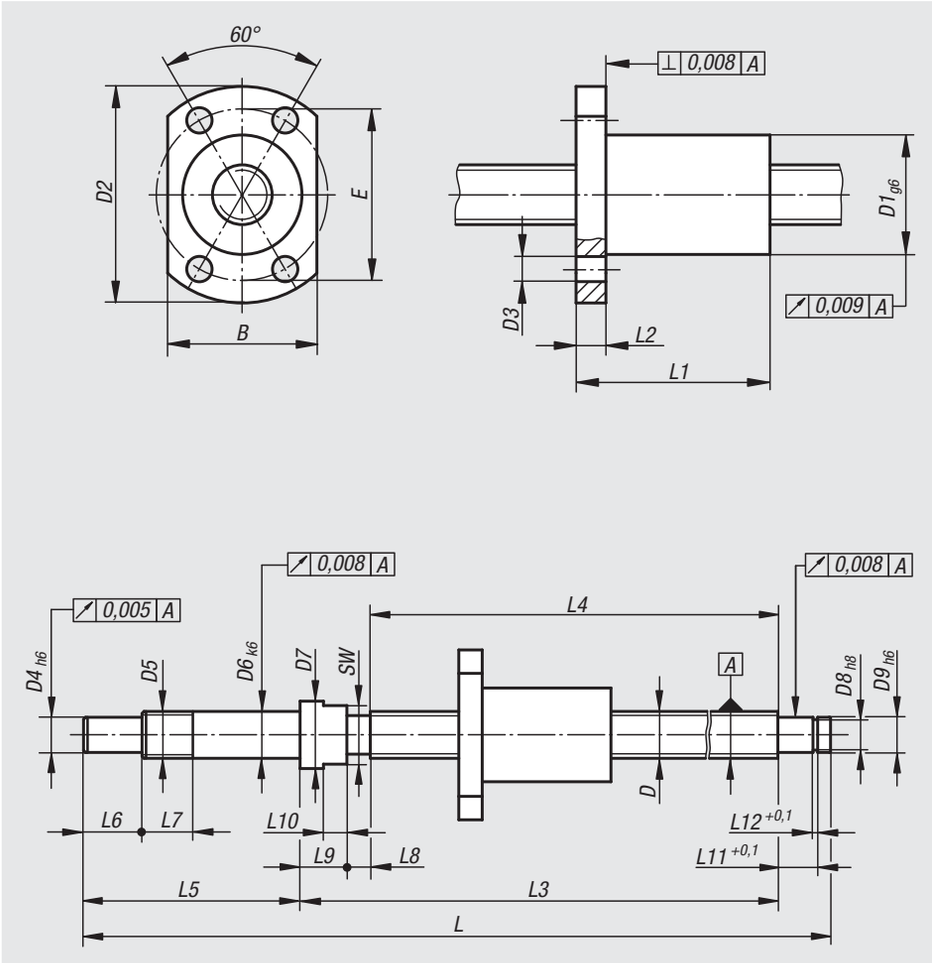

Material:
Spindle 1.1213 steel or 1.4112 stainless steel.
Nut 1.3505 steel or 1.4034 stainless steel.

Version:
Spindle and nut ground, induction hardened to 62 ±2 HRC and polished.

Sample order:
nlm 24100-0810050

Note:
Miniature ball screw linear actuators with machined shaft ends and flange nuts. Supplied with oil coating. Re-lubrication is recommended.

Produced acc. to precision class C5. Without preloading with backlash (max. 0.008 mm).

Precision spindles for use in optics, the food industry, automation, medical technology, the defence industry, aeronautics and precision tool technology.

Attention:
The flange nut must not be removed from the spindle, otherwise the balls fall out.

Order No.	Main material	D	Pitch	Travel	B	D1	D2	D3	D4	D5	D6	D7	D8	D9	E	L	L1	L2	L3	L4	L5	L6	L7	L8	L9	L10	L11	L12
24100-0810050	steel	8	1	50	18	14	27	3,4	6	M8x1	8	11,5	5,7	6	21	148	16	4	102	90	37	10	9	4	8	4	6,8	0,8
24100-0810100	steel	8	1	100	18	14	27	3,4	6	M8x1	8	11,5	5,7	6	21	198	16	4	152	140	37	10	9	4	8	4	6,8	0,8
24100-0810150	steel	8	1	150	18	14	27	3,4	6	M8x1	8	11,5	5,7	6	21	248	16	4	202	190	37	10	9	4	8	4	6,8	0,8
24100-0820050	steel	8	2	50	20	16	29	3,4	6	M8x1	8	11,5	5,7	6	23	148	26	4	102	90	37	10	9	4	8	4	6,8	0,8
24100-0820100	steel	8	2	100	20	16	29	3,4	6	M8x1	8	11,5	5,7	6	23	198	26	4	152	140	37	10	9	4	8	4	6,8	0,8
24100-0820150	steel	8	2	150	20	16	29	3,4	6	M8x1	8	11,5	5,7	6	23	248	26	4	202	190	37	10	9	4	8	4	6,8	0,8
24100-1020050	steel	10	2	50	22	18	35	4,5	6	M8x1	8	11,5	5,7	6	27	158	28	5	112	100	37	10	9	4	8	4	6,8	0,8
24100-1020100	steel	10	2	100	22	18	35	4,5	6	M8x1	8	11,5	5,7	6	27	208	28	5	162	150	37	10	9	4	8	4	6,8	0,8
24100-1020150	steel	10	2	150	22	18	35	4,5	6	M8x1	8	11,5	5,7	6	27	258	28	5	212	200	37	10	9	4	8	4	6,8	0,8
24100-1020200	steel	10	2	200	22	18	35	4,5	6	M8x1	8	11,5	5,7	6	27	308	28	5	262	250	37	10	9	4	8	4	6,8	0,8
24100-1220050	steel	12	2	50	24	20	37	4,5	8	M10x1	10	14	7,6	8	29	180	28	5	125	110	45	15	10	5	10	5	7,9	0,9
24100-1220100	steel	12	2	100	24	20	37	4,5	8	M10x1	10	14	7,6	8	29	230	28	5	175	160	45	15	10	5	10	5	7,9	0,9
24100-1220150	steel	12	2	150	24	20	37	4,5	8	M10x1	10	14	7,6	8	29	280	28	5	225	210	45	15	10	5	10	5	7,9	0,9
24100-1220200	steel	12	2	200	24	20	37	4,5	8	M10x1	10	14	7,6	8	29	330	28	5	275	260	45	15	10	5	10	5	7,9	0,9
24100-1220250	steel	12	2	250	24	20	37	4,5	8	M10x1	10	14	7,6	8	29	380	28	5	325	310	45	15	10	5	10	5	7,9	0,9

Miniature ball screw linear actuators

ground, with flange nut

Order No.	Main material	D	Pitch	Travel	B	D1	D2	D3	D4	D5	D6	D7	D8	D9	E	L	L1	L2	L3	L4	L5	L6	L7	L8	L9	L10	L11	L12
24100-10810050	stainless steel	8	1	50	18	14	27	3,4	6	M8x1	8	11,5	5,7	6	21	148	16	4	102	90	37	10	9	4	8	4	6,8	0,8
24100-10810100	stainless steel	8	1	100	18	14	27	3,4	6	M8x1	8	11,5	5,7	6	21	198	16	4	152	140	37	10	9	4	8	4	6,8	0,8
24100-10810150	stainless steel	8	1	150	18	14	27	3,4	6	M8x1	8	11,5	5,7	6	21	248	16	4	202	190	37	10	9	4	8	4	6,8	0,8
24100-10820050	stainless steel	8	2	50	20	16	29	3,4	6	M8x1	8	11,5	5,7	6	23	148	26	4	102	90	37	10	9	4	8	4	6,8	0,8
24100-10820100	stainless steel	8	2	100	20	16	29	3,4	6	M8x1	8	11,5	5,7	6	23	198	26	4	152	140	37	10	9	4	8	4	6,8	0,8
24100-10820150	stainless steel	8	2	150	20	16	29	3,4	6	M8x1	8	11,5	5,7	6	23	248	26	4	202	190	37	10	9	4	8	4	6,8	0,8
24100-11020050	stainless steel	10	2	50	22	18	35	4,5	6	M8x1	8	11,5	5,7	6	27	158	28	5	112	100	37	10	9	4	8	4	6,8	0,8
24100-11020100	stainless steel	10	2	100	22	18	35	4,5	6	M8x1	8	11,5	5,7	6	27	208	28	5	162	150	37	10	9	4	8	4	6,8	0,8
24100-11020150	stainless steel	10	2	150	22	18	35	4,5	6	M8x1	8	11,5	5,7	6	27	258	28	5	212	200	37	10	9	4	8	4	6,8	0,8
24100-11020200	stainless steel	10	2	200	22	18	35	4,5	6	M8x1	8	11,5	5,7	6	27	308	28	5	262	250	37	10	9	4	8	4	6,8	0,8
24100-11220050	stainless steel	12	2	50	24	20	37	4,5	8	M10x1	10	14	7,6	8	29	180	28	5	125	110	45	15	10	5	10	5	7,9	0,9
24100-11220100	stainless steel	12	2	100	24	20	37	4,5	8	M10x1	10	14	7,6	8	29	230	28	5	175	160	45	15	10	5	10	5	7,9	0,9
24100-11220150	stainless steel	12	2	150	24	20	37	4,5	8	M10x1	10	14	7,6	8	29	280	28	5	225	210	45	15	10	5	10	5	7,9	0,9
24100-11220200	stainless steel	12	2	200	24	20	37	4,5	8	M10x1	10	14	7,6	8	29	330	28	5	275	260	45	15	10	5	10	5	7,9	0,9
24100-11220250	stainless steel	12	2	250	24	20	37	4,5	8	M10x1	10	14	7,6	8	29	380	28	5	325	310	45	15	10	5	10	5	7,9	0,9

Order No.	Main material	SW	No. of support circulations	Pitch angle	Ball-Ø	Dynamic load rating N	Static load rating N	max. speed rpm
24100-0810050	steel	10	1 x 3	2° 13'	0,8	700	1300	3200
24100-0810100	steel	10	1 x 3	2° 13'	0,8	700	1300	3200
24100-0810150	steel	10	1 x 3	2° 13'	0,8	700	1300	3200
24100-0820050	steel	10	1 x 3	4° 23'	1,6	1350	2250	4200
24100-0820100	steel	10	1 x 3	4° 23'	1,6	1350	2250	4200
24100-0820150	steel	10	1 x 3	4° 23'	1,6	1350	2250	4200
24100-1020050	steel	10	1 x 3	2° 32'	1,6	1500	2900	4000
24100-1020100	steel	10	1 x 3	2° 32'	1,6	1500	2900	4000
24100-1020150	steel	10	1 x 3	2° 32'	1,6	1500	2900	4000
24100-1020200	steel	10	1 x 3	2° 32'	1,6	1500	2900	4000
24100-1220050	steel	12	1 x 3	2° 58'	1,6	1700	3700	3400
24100-1220100	steel	12	1 x 3	2° 58'	1,6	1700	3700	3400
24100-1220150	steel	12	1 x 3	2° 58'	1,6	1700	3700	3400
24100-1220200	steel	12	1 x 3	2° 58'	1,6	1700	3700	3400
24100-1220250	steel	12	1 x 3	2° 58'	1,6	1700	3700	3400
24100-10810050	stainless steel	10	1 x 3	2° 13'	0,8	670	1290	3000
24100-10810100	stainless steel	10	1 x 3	2° 13'	0,8	670	1290	3000
24100-10810150	stainless steel	10	1 x 3	2° 13'	0,8	670	1290	3000
24100-10820050	stainless steel	10	1 x 3	4° 23'	1,6	900	1500	3000
24100-10820100	stainless steel	10	1 x 3	4° 23'	1,6	900	1500	3000
24100-10820150	stainless steel	10	1 x 3	4° 23'	1,6	900	1500	3000
24100-11020050	stainless steel	10	1 x 3	2° 32'	1,6	1500	2900	3000
24100-11020100	stainless steel	10	1 x 3	2° 32'	1,6	1500	2900	3000
24100-11020150	stainless steel	10	1 x 3	2° 32'	1,6	1500	2900	3000
24100-11020200	stainless steel	10	1 x 3	2° 32'	1,6	1500	2900	3000
24100-11220050	stainless steel	12	1 x 3	2° 58'	1,6	1660	3620	3000
24100-11220100	stainless steel	12	1 x 3	2° 58'	1,6	1660	3620	3000
24100-11220150	stainless steel	12	1 x 3	2° 58'	1,6	1660	3620	3000
24100-11220200	stainless steel	12	1 x 3	2° 58'	1,6	1660	3620	3000
24100-11220250	stainless steel	12	1 x 3	2° 58'	1,6	1660	3620	3000

Miniature ball screw linear actuators

ground, with screw-in cylinder nut

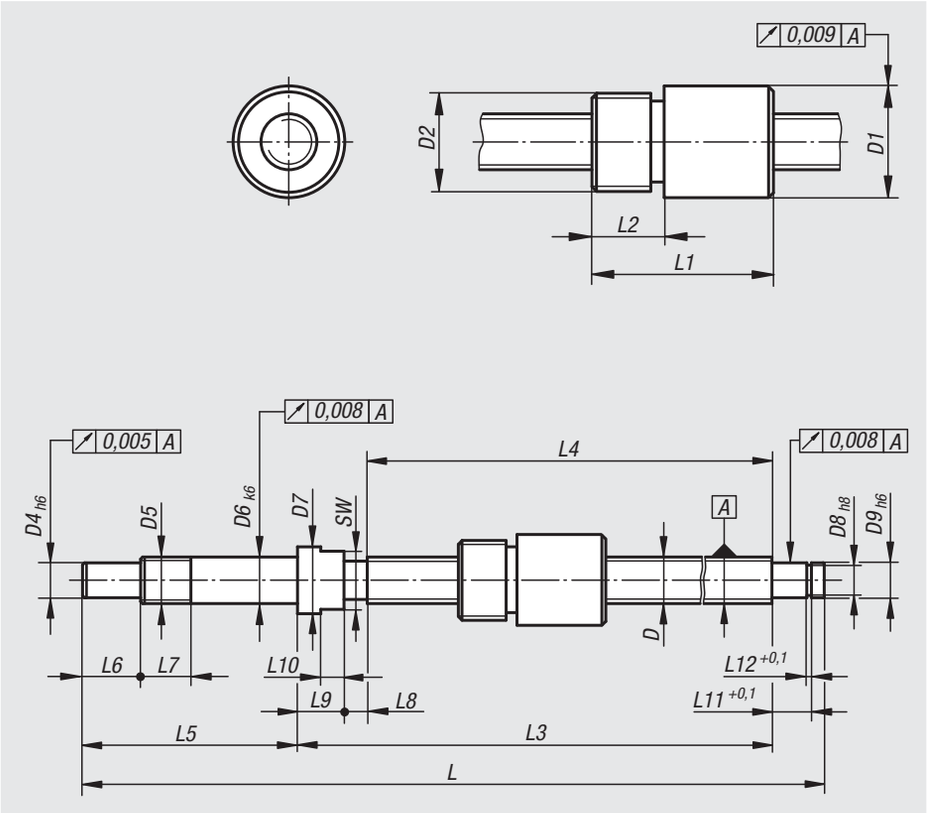

Material:
Spindle 1.1213 steel or 1.4112 stainless steel.
Nut 1.3505 steel or 1.4034 stainless steel.

Version:
Spindle and nut ground, induction hardened to 62 ± 2 HRC and polished.

Sample order:
nlm 24105-0810050

Note:
Miniature ball screw linear actuators with machined shaft ends and screw-on barrel nut. Supplier with oil coating. Re-lubrication is recommended.

Produced acc. to precision class C5. Without preloading with backlash (max. 0.008 mm).

Precision spindles for use in optics, the food industry, automation, medical technology, the defence industry, aeronautics and precision tool technology.

Attention:
The screw-in cylinder nut must not be removed from the spindle, otherwise the balls fall out.

Order No.	Main material	D	Pitch	Travel	D1	D2	D4	D5	D6	D7	D8	D9	L	L1	L2	L3	L4	L5	L6	L7	L8	L9	L10	L11	L12
24105-0810050	steel	8	1	50	16	M14x1	6	M8x1	8	11,5	5,7	6	148	22	8	102	90	37	10	9	4	8	4	6,8	0,8
24105-0810100	steel	8	1	100	16	M14x1	6	M8x1	8	11,5	5,7	6	198	22	8	152	140	37	10	9	4	8	4	6,8	0,8
24105-0810150	steel	8	1	150	16	M14x1	6	M8x1	8	11,5	5,7	6	248	22	8	202	190	37	10	9	4	8	4	6,8	0,8
24105-0820050	steel	8	2	50	16	M14x1	6	M8x1	8	11,5	5,7	6	148	27	8	102	90	37	10	9	4	8	4	6,8	0,8
24105-0820100	steel	8	2	100	16	M14x1	6	M8x1	8	11,5	5,7	6	198	27	8	152	140	37	10	9	4	8	4	6,8	0,8
24105-0820150	steel	8	2	150	16	M14x1	6	M8x1	8	11,5	5,7	6	248	27	8	202	190	37	10	9	4	8	4	6,8	0,8
24105-1020050	steel	10	2	50	18	M16x1	6	M8x1	8	11,5	5,7	6	158	28,5	7	112	100	37	10	9	4	8	4	6,8	0,8
24105-1020100	steel	10	2	100	18	M16x1	6	M8x1	8	11,5	5,7	6	208	28,5	7	162	150	37	10	9	4	8	4	6,8	0,8
24105-1020150	steel	10	2	150	18	M16x1	6	M8x1	8	11,5	5,7	6	258	28,5	7	212	200	37	10	9	4	8	4	6,8	0,8
24105-1020200	steel	10	2	200	18	M16x1	6	M8x1	8	11,5	5,7	6	308	28,5	7	262	250	37	10	9	4	8	4	6,8	0,8
24105-1220050	steel	12	2	50	20,5	M18x1	8	M10x1	10	14	7,6	8	180	29	10	125	110	45	15	10	5	10	5	7,9	0,9
24105-1220100	steel	12	2	100	20,5	M18x1	8	M10x1	10	14	7,6	8	230	29	10	175	160	45	15	10	5	10	5	7,9	0,9
24105-1220150	steel	12	2	150	20,5	M18x1	8	M10x1	10	14	7,6	8	280	29	10	225	210	45	15	10	5	10	5	7,9	0,9
24105-1220200	steel	12	2	200	20,5	M18x1	8	M10x1	10	14	7,6	8	330	29	10	275	260	45	15	10	5	10	5	7,9	0,9
24105-1220250	steel	12	2	250	20,5	M18x1	8	M10x1	10	14	7,6	8	380	29	10	325	310	45	15	10	5	10	5	7,9	0,9

Miniature ball screw linear actuators

ground, with screw-in cylinder nut

Order No.	Main material	D	Pitch	Travel	D1	D2	D4	D5	D6	D7	D8	D9	L	L1	L2	L3	L4	L5	L6	L7	L8	L9	L10	L11	L12
24105-10810050	stainless steel	8	1	50	16	M14x1	6	M8x1	8	11,5	5,7	6	148	22	8	102	90	37	10	9	4	8	4	6,8	0,8
24105-10810100	stainless steel	8	1	100	16	M14x1	6	M8x1	8	11,5	5,7	6	198	22	8	152	140	37	10	9	4	8	4	6,8	0,8
24105-10810150	stainless steel	8	1	150	16	M14x1	6	M8x1	8	11,5	5,7	6	248	22	8	202	190	37	10	9	4	8	4	6,8	0,8
24105-10820050	stainless steel	8	2	50	16	M14x1	6	M8x1	8	11,5	5,7	6	148	27	8	102	90	37	10	9	4	8	4	6,8	0,8
24105-10820100	stainless steel	8	2	100	16	M14x1	6	M8x1	8	11,5	5,7	6	198	27	8	152	140	37	10	9	4	8	4	6,8	0,8
24105-10820150	stainless steel	8	2	150	16	M14x1	6	M8x1	8	11,5	5,7	6	248	27	8	202	190	37	10	9	4	8	4	6,8	0,8
24105-11020050	stainless steel	10	2	50	18	M16x1	6	M8x1	10	11,5	5,7	6	158	28,5	10	112	100	37	10	9	4	8	4	6,8	0,8
24105-11020100	stainless steel	10	2	100	18	M16x1	6	M8x1	10	11,5	5,7	6	208	28,5	10	162	150	37	10	9	4	8	4	6,8	0,8
24105-11020150	stainless steel	10	2	150	18	M16x1	6	M8x1	10	11,5	5,7	6	258	28,5	10	212	200	37	10	9	4	8	4	6,8	0,8
24105-11020200	stainless steel	10	2	200	18	M16x1	6	M8x1	10	11,5	5,7	6	308	28,5	10	262	250	37	10	9	4	8	4	6,8	0,8
24105-11220050	stainless steel	12	2	50	20,5	M18x1	8	M10x1	12	14	7,6	8	180	29	12	125	110	45	15	10	5	10	5	7,9	0,9
24105-11220100	stainless steel	12	2	100	20,5	M18x1	8	M10x1	12	14	7,6	8	230	29	12	175	160	45	15	10	5	10	5	7,9	0,9
24105-11220150	stainless steel	12	2	150	20,5	M18x1	8	M10x1	12	14	7,6	8	280	29	12	225	210	45	15	10	5	10	5	7,9	0,9
24105-11220200	stainless steel	12	2	200	20,5	M18x1	8	M10x1	12	14	7,6	8	330	29	12	275	260	45	15	10	5	10	5	7,9	0,9
24105-11220250	stainless steel	12	2	250	20,5	M18x1	8	M10x1	12	14	7,6	8	380	29	12	325	310	45	15	10	5	10	5	7,9	0,9

Order No.	Main material	SW	No. of support circulations	Pitch angle	Ball-Ø	Dynamic load rating N	Static load rating N	max. speed rpm
24105-0810050	steel	10	1 x 3	2° 13'	0,8	700	1300	3200
24105-0810100	steel	10	1 x 3	2° 13'	0,8	700	1300	3200
24105-0810150	steel	10	1 x 3	2° 13'	0,8	700	1300	3200
24105-0820050	steel	10	1 x 3	4° 23'	1,6	1350	2250	4200
24105-0820100	steel	10	1 x 3	4° 23'	1,6	1350	2250	4200
24105-0820150	steel	10	1 x 3	4° 23'	1,6	1350	2250	4200
24105-1020050	steel	10	1 x 3	2° 32'	1,6	1500	2900	4000
24105-1020100	steel	10	1 x 3	2° 32'	1,6	1500	2900	4000
24105-1020150	steel	10	1 x 3	2° 32'	1,6	1500	2900	4000
24105-1020200	steel	10	1 x 3	2° 32'	1,6	1500	2900	4000
24105-1220050	steel	12	1 x 3	2° 58'	1,6	1700	3700	3400
24105-1220100	steel	12	1 x 3	2° 58'	1,6	1700	3700	3400
24105-1220150	steel	12	1 x 3	2° 58'	1,6	1700	3700	3400
24105-1220200	steel	12	1 x 3	2° 58'	1,6	1700	3700	3400
24105-1220250	steel	12	1 x 3	2° 58'	1,6	1700	3700	3400
24105-10810050	stainless steel	10	1 x 3	2° 13'	0,8	670	1290	3000
24105-10810100	stainless steel	10	1 x 3	2° 13'	0,8	670	1290	3000
24105-10810150	stainless steel	10	1 x 3	2° 13'	0,8	670	1290	3000
24105-10820050	stainless steel	10	1 x 3	4° 23'	1,6	900	1500	3000
24105-10820100	stainless steel	10	1 x 3	4° 23'	1,6	900	1500	3000
24105-10820150	stainless steel	10	1 x 3	4° 23'	1,6	900	1500	3000
24105-11020050	stainless steel	10	1 x 3	2° 32'	1,6	1500	2900	3000
24105-11020100	stainless steel	10	1 x 3	2° 32'	1,6	1500	2900	3000
24105-11020150	stainless steel	10	1 x 3	2° 32'	1,6	1500	2900	3000
24105-11020200	stainless steel	10	1 x 3	2° 32'	1,6	1500	2900	3000
24105-11220050	stainless steel	12	1 x 3	2° 58'	1,6	1660	3620	3000
24105-11220100	stainless steel	12	1 x 3	2° 58'	1,6	1660	3620	3000
24105-11220150	stainless steel	12	1 x 3	2° 58'	1,6	1660	3620	3000
24105-11220200	stainless steel	12	1 x 3	2° 58'	1,6	1660	3620	3000
24105-11220250	stainless steel	12	1 x 3	2° 58'	1,6	1660	3620	3000

Pillow block bearing pedestal type UCP

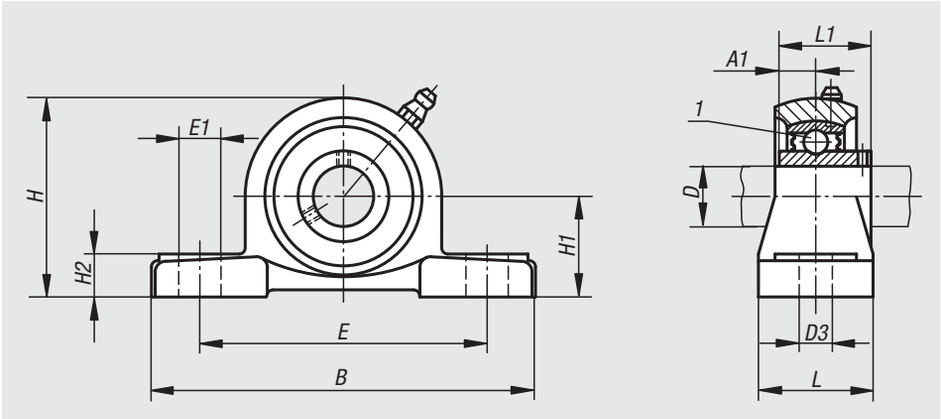

Material:
Housing, grey cast iron.
Bearing, ball-bearing steel 100Cr6.
Seal, rubber NBR.

Version:
Housing, painted.

Sample order:
nlm 24200-12201

Note:
Pillow block bearings consist of a sealed single-row ball bearing with a spherical outer ring which is mounted in a housing. Because of the spherical outer surface of the bearing, shaft misalignment can be compensated for. The bearings are manufactured with a plus tolerance. This results in transition or press fits when using shafts with h-tolerances. The shaft is secured by grub screws on the inner ring.

In normal applications, pillow block bearings are maintenance-free due to the lifetime lubrication. In difficult environmental conditions re-lubrication can be carried out over the grease nipple.

All housing dimensions are nominal dimensions for which the usual casting tolerances must be taken into consideration.

Temperature range:
-15 °C to +100 °C.

Drawing reference:
1) ball bearing

Order No.	Bearing	Housing	D	A1	B	D3	E	E1	H	H1	H2	L	L1	α	Fastening screw
24200-12201	UC 201	P 201	12	12,7	127	13	95	19	65	30,2	14	38	31	10°	M10
24200-15202	UC 202	P 202	15	12,7	127	13	95	19	65	30,2	14	38	31	10°	M10
24200-17203	UC 203	P 203	17	12,7	127	13	95	19	65	30,2	14	38	31	10°	M10
24200-20204	UC 204	P 204	20	12,7	127	13	95	19	65	33,3	14	38	31	10°	M10
24200-25205	UC 205	P 205	25	14,3	140	13	105	19	71	36,5	15	38	34	10°	M10
24200-30206	UC 206	P 206	30	15,9	165	17	121	20	84	42,9	17	44	38,1	10°	M14
24200-35207	UC 207	P 207	35	17,5	167	17	127	20	93	47,6	18	48	42,9	10°	M14
24200-40208	UC 208	P 208	40	19	184	17	137	20	100	49,2	18	54	49,2	10°	M14
24200-45209	UC 209	P 209	45	19	190	17	146	20	106	54	20	54	49,2	10°	M14
24200-50210	UC 210	P 210	50	19	206	20	159	23	113	57,2	21	60	51,6	10°	M16
24200-55211	UC 211	P 211	55	22,2	219	20	171	23	125	63,5	23	60	55,6	10°	M16
24200-60212	UC 212	P 212	60	25,4	241	20	184	23	138	69,8	25	70	65,1	10°	M16

Pillow block bearing flange type UCF

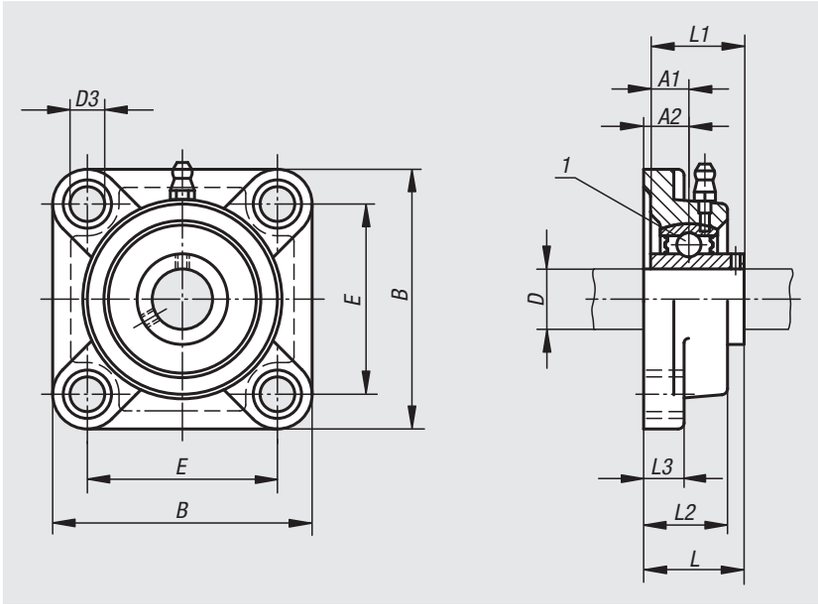

Material:
Housing, grey cast iron.
Bearing, ball-bearing steel 100Cr6.
Seal, rubber NBR.

Version:
Housing, painted.

Sample order:
nlm 24210-12201

Note:
Pillow block bearings consist of a sealed single-row ball bearing with a spherical outer ring which is mounted in a housing. Because of the spherical outer surface of the bearing, shaft misalignment can be compensated for. The bearings are manufactured with a plus tolerance. This results in transition or press fits when using shafts with h-tolerances. The shaft is secured by grub screws on the inner ring.

In normal applications, pillow block bearings are maintenance-free due to the lifetime lubrication. In difficult environmental conditions re-lubrication can be carried out over the grease nipple.

All housing dimensions are nominal dimensions for which the usual casting tolerances must be taken into consideration.

Temperature range:
-15 °C to +100 °C.

Drawing reference:
1) ball bearing

Order No.	Bearing	Housing	D	A1	A2	B	D3	E	L	L1	L2	L3	α	Fastening screw
24210-12201	UC 201	F 201	12	12,7	15	86	12	64	33,3	31	25,5	12	10°	M10
24210-15202	UC 202	F 202	15	12,7	15	86	12	64	33,3	31	25,5	12	10°	M10
24210-17203	UC 203	F 203	17	12,7	15	86	12	64	33,3	31	25,5	12	10°	M10
24210-20204	UC 204	F 204	20	12,7	15	86	12	64	33,3	31	25,5	12	10°	M10
24210-25205	UC 205	F 205	25	14,3	16	95	12	70	35,8	34	27	14	10°	M10
24210-30206	UC 206	F 206	30	15,9	18	108	12	83	40,2	38,1	31	14	10°	M10
24210-35207	UC 207	F 207	35	17,5	19	117	14	92	44,4	42,9	34	16	10°	M12
24210-40208	UC 208	F 208	40	19	21	130	16	102	51,2	49,2	36	16	10°	M14
24210-45209	UC 209	F 209	45	19	22	137	16	105	52,2	49,2	38	18	10°	M14
24210-50210	UC 210	F 210	50	19	22	143	16	111	54,6	51,6	40	18	10°	M14
24210-55211	UC 211	F 211	55	22,2	25	162	19	130	58,4	55,6	43	20	10°	M16
24210-60212	UC 212	F 212	60	25,4	29	175	19	143	68,7	65,1	48	20	10°	M16

Pillow block bearing flange type UCFC

with centring hub

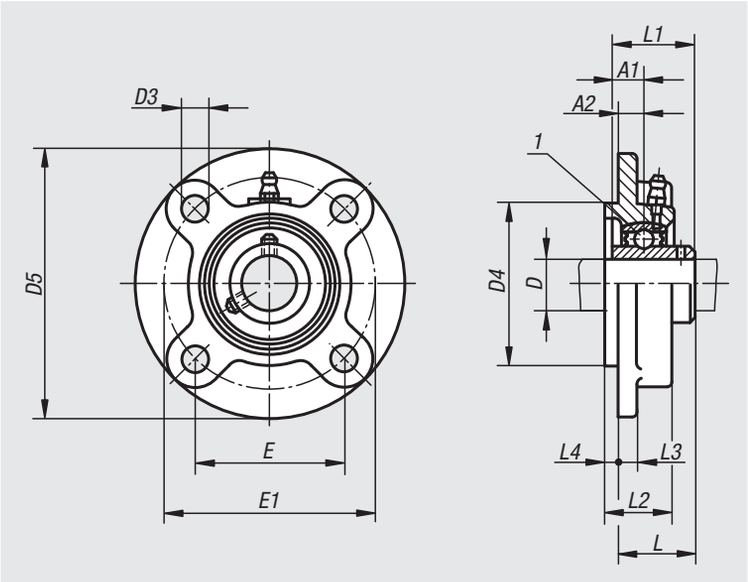

Material:
Housing, grey cast iron.
Bearing, ball-bearing steel 100Cr6.
Seal, rubber NBR.

Version:
Housing, painted.

Sample order:
nlm 24212-20204

Note:
Pillow block bearings consist of a sealed single-row ball bearing with a spherical outer ring which is mounted in a housing. Because of the spherical outer surface of the bearing, shaft misalignment can be compensated for. The bearings are manufactured with a plus tolerance. This results in transition or press fits when using shafts with h-tolerances. The shaft is secured by grub screws on the inner ring.

In normal applications, pillow block bearings are maintenance-free due to the lifetime lubrication. In difficult environmental conditions re-lubrication can be carried out over the grease nipple.

All housing dimensions are nominal dimensions for which the usual casting tolerances must be taken into consideration.

Temperature range:
-15 °C to +100 °C.

Drawing reference:
1) ball bearing

Order No.	Bearing	Housing	D	A1	A2	D3	D4	D5	E	E1	L	L1	L2	L3	L4	α	Fastening screw
24212-20204	UC 204	FC 204	20	12,7	10	12	62	100	55,1	78	28,3	31	20,5	7	5	10°	M10
24212-25205	UC 205	FC 205	25	14,3	10	12	70	115	63,6	90	29,8	34	21	7	6	10°	M10
24212-30206	UC 206	FC 206	30	15,9	10	12	80	125	70,7	100	32,2	38,1	23	8	8	10°	M10
24212-35207	UC 207	FC 207	35	17,5	11	14	90	135	77,8	110	36,4	42,9	26	9	8	10°	M12
24212-40208	UC 208	FC 208	40	19	11	14	100	145	84,8	120	41,2	49,2	26	9	10	10°	M12
24212-45209	UC 209	FC 209	45	19	10	16	105	160	93,3	132	40,2	49,2	26	14	12	10°	M14
24212-50210	UC 210	FC 210	50	19	10	16	110	165	97,6	138	42,6	51,6	28	14	12	10°	M14
24212-55211	UC 211	FC 211	55	22,2	13	19	125	185	106,1	150	46,4	55,6	31	15	12	10°	M16
24212-60212	UC 212	FC 212	60	25,4	17	19	135	195	113,1	160	56,7	65,1	36	15	12	10°	M16

Pillow block bearing flange type UCFL

2-hole

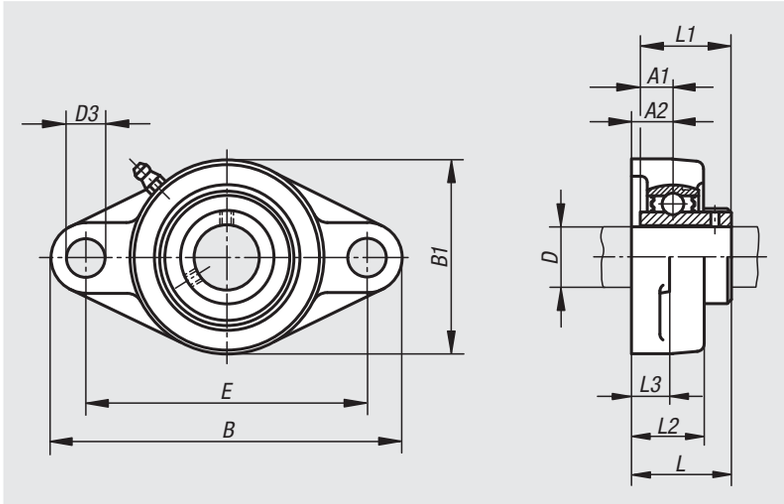

Material:
Housing, grey cast iron.
Bearing, ball-bearing steel 100Cr6.
Seal, rubber NBR.

Version:
Housing, painted.

Sample order:
nlm 24215-12201

Note:
Pillow block bearings consist of a sealed single-row ball bearing with a spherical outer ring which is mounted in a housing. Because of the spherical outer surface of the bearing, shaft misalignment can be compensated for. The bearings are manufactured with a plus tolerance. This results in transition or press fits when using shafts with h-tolerances. The shaft is secured by grub screws on the inner ring.

In normal applications, pillow block bearings are maintenance-free due to the lifetime lubrication. In difficult environmental conditions re-lubrication can be carried out over the grease nipple.

All housing dimensions are nominal dimensions for which the usual casting tolerances must be taken into consideration.

Temperature range:
-15 °C to +100 °C.

Order No.	Bearing	Housing	D	A1	A2	B	B1	D3	E	L	L1	L2	L3	α	Fastening screw
24215-12201	UC 201	FL 201	12	12,7	15	113	60	12	90	33,3	31	25,5	11	10°	M10
24215-15202	UC 202	FL 202	15	12,7	15	113	60	12	90	33,3	31	25,5	11	10°	M10
24215-17203	UC 203	FL 203	17	12,7	15	113	60	12	90	33,3	31	25,5	11	10°	M10
24215-20204	UC 204	FL 204	20	12,7	15	113	60	12	90	33,3	31	25,5	11	10°	M10
24215-25205	UC 205	FL 205	25	14,3	16	130	68	16	99	35,8	34	27	13	10°	M14
24215-30206	UC 206	FL 206	30	15,9	18	148	80	16	117	40,2	38,1	31	13	10°	M14
24215-35207	UC 207	FL 207	35	17,5	19	161	90	16	130	44,4	42,9	34	14	10°	M14
24215-40208	UC 208	FL 208	40	19	21	175	100	16	144	51,2	49,2	36	14	10°	M14
24215-45209	UC 209	FL 209	45	19	22	188	108	19	148	52,2	49,2	38	15	10°	M16
24215-50210	UC 210	FL 210	50	19	22	197	115	19	157	54,6	51,6	40	15	10°	M16
24215-55211	UC 211	FL 211	55	22,2	25	224	130	19	184	58,4	55,6	43	18	10°	M16
24215-60212	UC 212	FL 212	60	25,4	29	250	140	23	202	68,7	65,1	48	18	10°	M20

Pillow block bearing pedestal type BPP

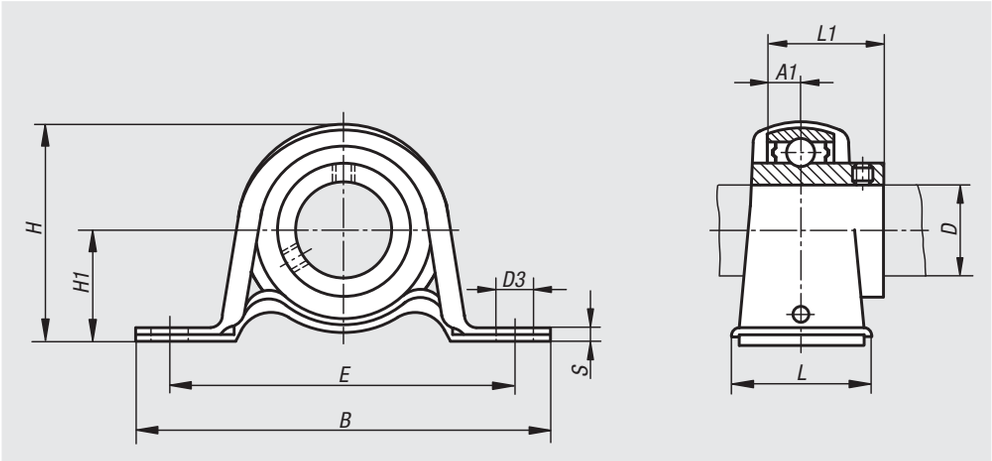

Material:
Housing, steel
Bearing, ball-bearing steel 100Cr6.
Seal, rubber NBR.

Version:
Housing, galvanized.

Sample order:
nlm 24225-12201

Note:
Pillow block bearings consist of a sealed single-row ball bearing with a spherical outer ring which is mounted in a sheet steel housing. Because of the spherical outer surface of the bearing, shaft misalignment can be compensated for. The bearings are manufactured with a plus tolerance. This results in transition or press fits when using shafts with h-tolerances. The shaft is secured by grub screws on the inner ring.

In normal applications, pillow block bearings are maintenance-free due to the lifetime lubrication.

Do not exceed the housing load. It is less than the load rating of the bearings.

Temperature range:
-15 °C to +100 °C.

Order No.	Bearing	Housing	D	A1	B	D3	E	H	H1	L	L1	S	α	Fastening screw	max. static load kN
24225-12201	B 201	PP 201	12	6	86	9,5	68	43,8	22,2	25	22	3,2	10°	M8	2,16
24225-15202	B 202	PP 202	15	6	86	9,5	68	43,8	22,2	25	22	3,2	10°	M8	2,16
24225-17203	B 203	PP 203	17	6	86	9,5	68	43,8	22,2	25	22	3,2	10°	M8	2,16
24225-20204	B 204	PP 204	20	7	98	9,5	76	50,5	25,4	32	25	3,2	10°	M8	2,62
24225-25205	B 205	PP 205	25	7,5	108	11,5	86	56,5	28,6	32	27	4	10°	M10	3,72
24225-30206	B 206	PP 206	30	8	117	11,5	95	66,3	33,3	38	30	4	10°	M10	4,41
24225-35207	B 207	PP 207	35	8,5	129	11,5	106	78	39,7	42	32	4,6	10°	M10	4,9

Insert bearing UC

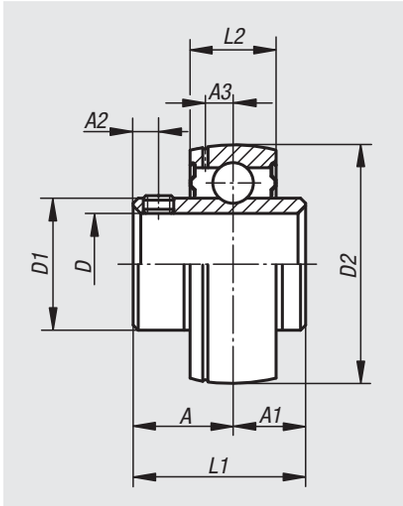

Material:
Ball-bearing steel 100Cr6.
Seal, rubber NBR.

Version:
Sealed on both sides with a spherical outer ring.
Can be re-lubricated.

Sample order:
nlm 24230-20204

Note:
The internal construction of the insert bearings corresponds to that of standard Series 6200 and 6300 radial ball bearing. However, they have wider inner rings for easier fastening on shafts. The inner rings are manufactured with a plus tolerance. This results in transition or press fits when using shafts with h-tolerances. The shaft is secured by 2 grub screws positioned 120° apart on the inner ring.

The insert bearings are ready to install and are permanently lubricated with a suitable ball bearing grease. In normal applications, re-lubrication is not necessary.

Temperature range:
-15 °C to +100 °C.

Order No.	Bearing	D	A	A1	A2	A3	D1	D2	L1	L2	Grub screw	Dynamic base loads kN	Static base loads kN
24230-20204	UC 204	20	18,3	12,7	4,8	3,7	29	47	31	17	M6x0,75	9,88	6,2
24230-25205	UC 205	25	19,7	14,3	5	3,9	34	52	34	17	M6x0,75	10,78	6,98
24230-30206	UC 206	30	22,2	15,9	5	5	40,5	62	38,1	19	M6x0,75	14,97	10,04
24230-35207	UC 207	35	25,4	17,5	7	5,7	48	72	42,9	20	M8x1	19,75	13,67
24230-40208	UC 208	40	30,2	19	8	6,2	53	80	49,2	21	M8x1	22,71	15,94
24230-45209	UC 209	45	30,2	19	8	6,4	57,3	85	49,2	22	M8x1	24,36	17,71
24230-50210	UC 210	50	32,6	19	10	6,5	63	90	51,6	24	M10x1,25	26,98	19,84
24230-55211	UC 211	55	33,4	22,2	10	7	70	100	55,6	25	M10x1,25	33,37	25,11
24230-60212	UC 212	60	39,7	25,4	10	7,6	77	110	65,1	27	M10x1,25	36,74	27,97

Insert bearing B

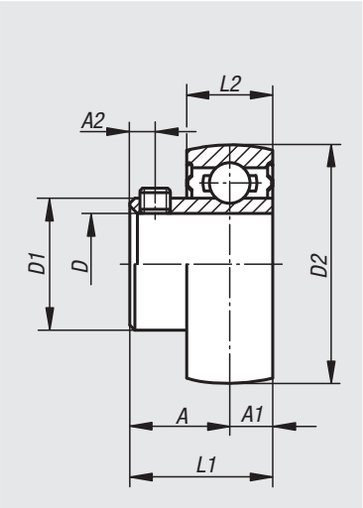

Material:
Ball-bearing steel 100Cr6.
Seal, rubber NBR.

Version:
Sealed on both sides with a spherical outer ring.

Sample order:
nlm 24235-12201

Note:
The internal construction of the insert bearings corresponds to that of standard Series 6200 and 6300 radial ball bearing. However, they have wider inner rings for easier fastening on shafts. The inner rings are manufactured with a plus tolerance. This results in transition or press fits when using shafts with h-tolerances. The shaft is secured by 2 grub screws positioned 120° apart on the inner ring.

The insert bearings are ready to install and are permanently lubricated with a suitable ball bearing grease.

Temperature range:
-15 °C to +100 °C.

Order No.	Bearing	D	A	A1	A2	D1	D2	L1	L2	Grub screw	Dynamic base loads kN	Static base loads kN
24235-12201	B 201	12	16	6	4,5	24,7	40	22	12	M5x0,8	7,36	4,48
24235-15202	B 202	15	16	6	4,5	24,7	40	22	12	M5x0,8	7,36	4,48
24235-17203	B 203	17	16	6	4,5	24,7	40	22	12	M5x0,8	7,36	4,48
24235-20204	B 204	20	18	7	4,5	29	47	25	14	M5x0,8	9,88	6,2
24235-25205	B 205	25	19,5	7,5	5,5	34	52	27	15	M6x0,75	10,78	6,98
24235-30206	B 206	30	22	8	6	40,5	62	30	16	M6x0,75	14,97	10,04
24235-35207	B 207	35	23,5	8,5	6,5	48	72	32	17	M8x1	19,75	13,67

Pillow block bearing pedestal type MUCP

stainless steel

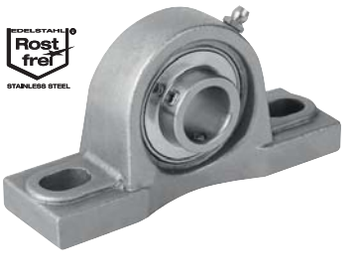

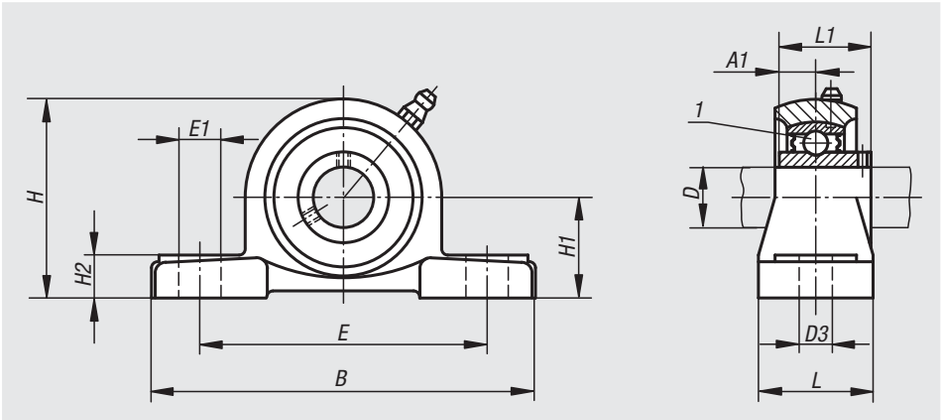

Material:
Housing, stainless steel 1.4301.
Bearing, stainless steel 1.4125.
Seal, rubber NBR.

Version:
Bright.

Sample order:
nlm 24240-20204

Note:
Pillow block bearings consist of a sealed single-row ball bearing with a spherical outer ring which is mounted in a housing. Because of the spherical outer surface of the bearing, shaft misalignment can be compensated for. The bearings are manufactured with a plus tolerance. This results in transition or press fits when using shafts with h-tolerances. The shaft is secured by grub screws on the inner ring.

In normal applications, pillow block bearings are maintenance-free due to the lifetime lubrication. In difficult environmental conditions re-lubrication can be carried out over the grease nipple.

All housing dimensions are nominal dimensions for which the usual casting tolerances must be taken into consideration.

Temperature range:
-15 °C to +100 °C.

Drawing reference:
1) ball bearing

Order No.	Bearing	Housing	D	A1	B	D3	E	E1	H	H1	H2	L	L1	α	Fastening screw
24240-20204	MUC 204	P 204	20	12,7	127	13	95	19	65	33,3	14	38	31	10°	M10
24240-25205	MUC 205	P 205	25	14,3	140	13	105	19	71	36,5	15	38	34,1	10°	M10
24240-30206	MUC 206	P 206	30	15,9	165	17	121	20	84	42,9	17	44	38,1	10°	M14
24240-35207	MUC 207	P 207	35	17,5	167	17	127	20	93	47,6	18	48	42,9	10°	M14
24240-40208	MUC 208	P 208	40	19	184	17	137	20	100	49,2	18	54	49,2	10°	M14
24240-45209	MUC 209	P 209	45	19	190	17	146	20	106	54	20	54	49,2	10°	M14
24240-50210	MUC 210	P 210	50	19	206	20	159	23	113	57,2	21	60	51,6	10°	M16

Pillow block bearing pedestal type

Material:
Housing 1.4301.
Ball bearing 1.4112.
Plain bearing POM.

Version:
Plain bearing white.
Stainless steel parts bright.

Sample order:
nlm 24240-01-12201

Note:
These stainless steel pillow block bearings have the same operating dimensions as the standard bearing housings of the major manufacturers, and can so be used or exchanged in existing constructions.

Drawing reference:
1) ball bearing
2) plain bearing

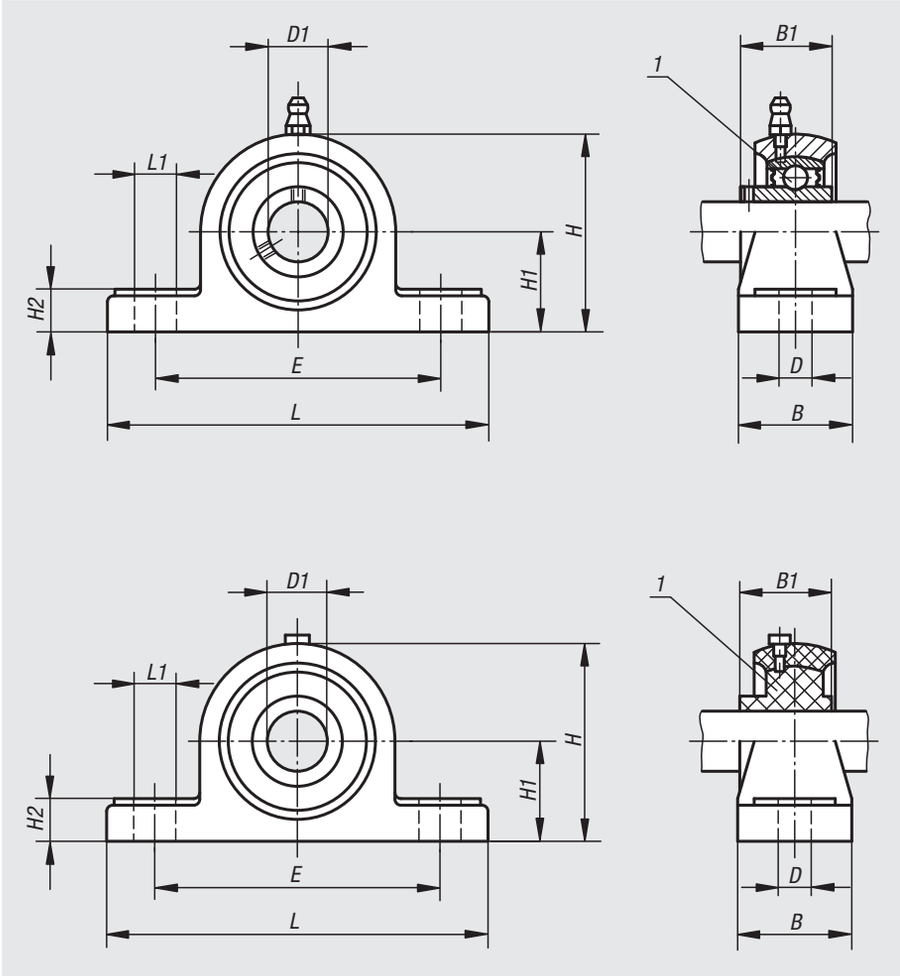

With ball bearing

Order No.	Housing	D	H1	B	H	E	L	L1	D3	E1	H2
24240-01-12201	201	12	33,3	126,1	64,4	95	38,2	31	13	19	15
24240-01-15202	202	15	33,3	126,1	64,4	95	38,2	31	13	19	15
24240-01-20204	204	20	33,3	126,1	64,4	95	38,2	31	13	19	15
24240-01-25205	205	25	36,5	140,6	69,7	105	38,2	34	13	19	15,7
24240-01-30206	206	30	43	165	83,2	121	48,2	38,1	17	21	18,3
24240-01-35207	207	35	47,6	167	94	127	48	42,9	17	21	19
24240-01-40208	208	40	49,2	184	100	137	54	49,2	17	23	19

With POM plain bearing

Order No.	Housing	D	H1	B	H	E	L	L1	D3	E1	H2
24240-01-112201	201	12	33,3	126,1	64,4	95	38,2	31	13	19	15
24240-01-115202	202	15	33,3	126,1	64,4	95	38,2	31	13	19	15
24240-01-120204	204	20	33,3	126,1	64,4	95	38,2	31	13	19	15
24240-01-125205	205	25	36,5	140,6	69,7	105	38,2	34	13	21	18,3
24240-01-130206	206	30	43	165	83,2	121	48,2	38,1	17	21	19
24240-01-135207	207	35	47,6	167	94	127	48	42,9	17	21	19
24240-01-140208	208	40	49,2	184	100	137	54	49,2	17	23	19

Pillow block bearing pedestal type

Material:
Housing 1.4301.
Ball bearing 1.4112.
Plain bearing POM.

Version:
Plain bearing white.
Stainless steel parts bright.

Sample order:
nlm 24241-01-12201

Note:
These stainless steel pillow block bearings have the same operating dimensions as the standard bearing housings of the major manufacturers, and can so be used or exchanged in existing constructions.

Drawing reference:
1) ball bearing
2) plain bearing

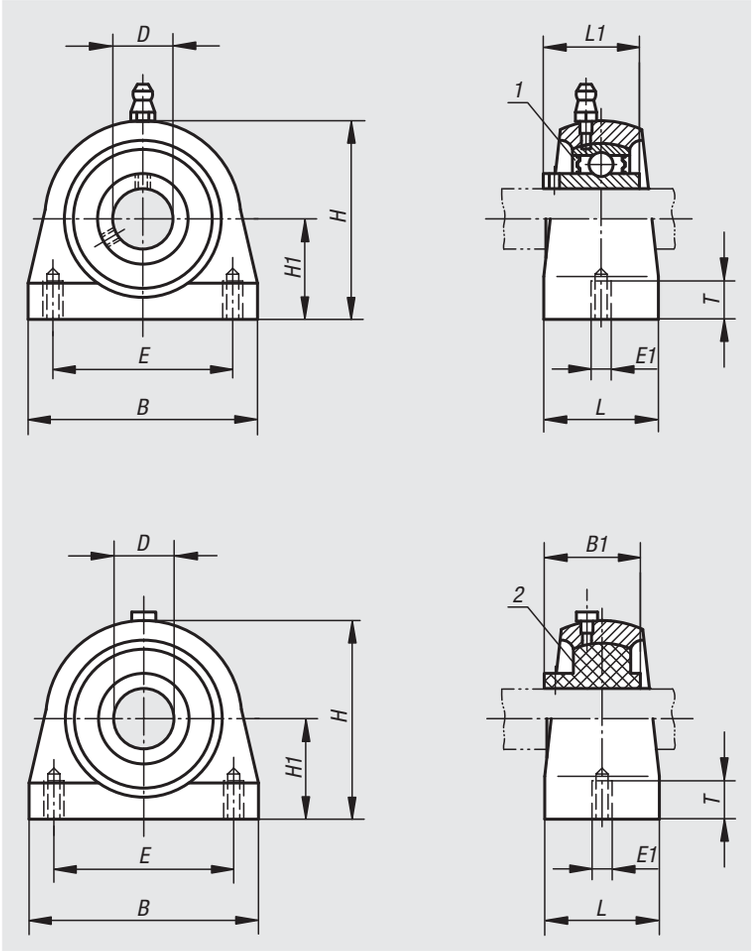

With ball bearing

Order No.	Housing	D	H1	B	H	E	E1	T	L	L1
24241-01-12201	201	12	33,3	73	65	50,8	M8	10	38	31
24241-01-15202	202	15	33,3	73	65	50,8	M8	10	38	31
24241-01-20204	204	20	33,3	73	65	50,8	M8	10	38	31
24241-01-25205	205	25	36,7	76	71	50,8	M10	12,5	38	34
24241-01-30206	206	30	42,9	102	86	76,1	M10	12,5	38	38,1
24241-01-35207	207	35	47,6	108	95	82,6	M10	12,5	48	42,9
24241-01-40208	208	40	49,2	117	100	88,9	M12	15	48	49,2

With POM plain bearing

Order No.	Housing	D	H1	B	H	E	E1	T	L	L1
24241-01-112201	201	12	33,3	73	65	50,8	M8	10	38	31
24241-01-115202	202	15	33,3	73	65	50,8	M8	10	38	31
24241-01-120204	204	20	33,3	73	65	50,8	M8	10	38	31
24241-01-125205	205	25	36,7	76	71	50,8	M10	12,5	38	34
24241-01-130206	206	30	42,9	102	86	76,1	M10	12,5	38	38,1
24241-01-135207	207	35	47,6	108	95	82,6	M10	12,5	48	42,9
24241-01-140208	208	40	49,2	117	100	88,9	M12	15	48	49,2

Pillow block bearing flange type MUCF

stainless steel

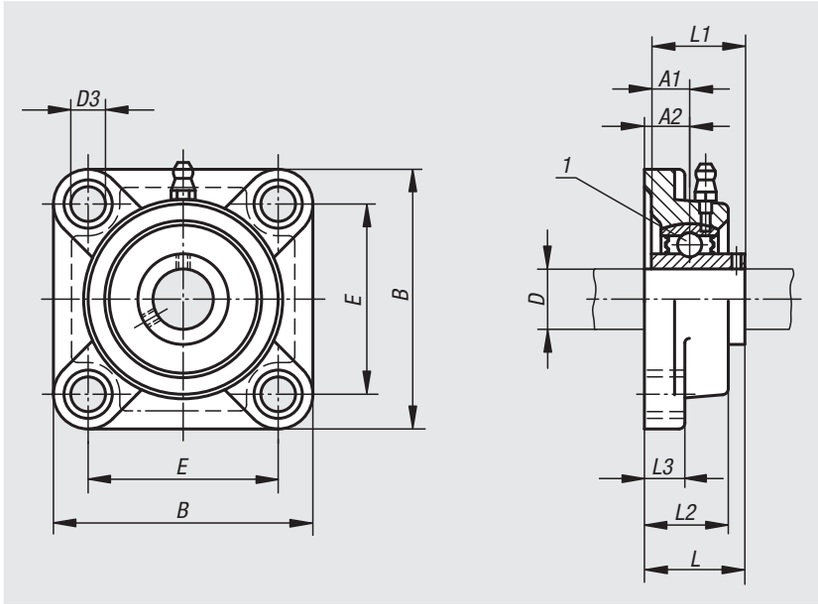

Material:
Housing, stainless steel 1.4301.
Bearing, stainless steel 1.4125.
Seal, rubber NBR.

Version:
Bright.

Sample order:
nlm 24242-20204

Note:
Pillow block bearings consist of a sealed single-row ball bearing with a spherical outer ring which is mounted in a housing. Because of the spherical outer surface of the bearing, shaft misalignment can be compensated for. The bearings are manufactured with a plus tolerance. This results in transition or press fits when using shafts with h-tolerances. The shaft is secured by grub screws on the inner ring.

In normal applications, pillow block bearings are maintenance-free due to the lifetime lubrication. In difficult environmental conditions re-lubrication can be carried out over the grease nipple.

All housing dimensions are nominal dimensions for which the usual casting tolerances must be taken into consideration.

Temperature range:
-15 °C to +100 °C.

Drawing reference:
1) ball bearing

Order No.	Bearing	Housing	D	A1	A2	B	D3	E	L	L1	L2	L3	Fastening screw
24242-20204	MUC 204	F 204	20	12,7	15	86	12	64	33,3	31	25,5	12	M10
24242-25205	MUC 205	F 205	25	14,3	16	95	12	70	35,8	34,1	27	14,3	M10
24242-30206	MUC 206	F 206	30	15,9	18	108	12	83	40,2	38,1	31	14	M10
24242-35207	MUC 207	F 207	35	17,5	19	117	14	92	44,4	42,9	34	15,9	M12
24242-40208	MUC 208	F 208	40	19	21	130	16	102	51,2	49,2	36	15,9	M14
24242-45209	MUC 209	F 209	45	19	22	137	16	105	52,2	49,2	38	16,7	M14
24242-50210	MUC 210	F 210	50	19	22	143	16	111	54,6	51,6	40	15,9	M14

Pillow block bearing flange type

Material:
Housing 1.4301.
Ball bearing 1.4112.
Plain bearing POM.

Version:
Plain bearing white.
Stainless steel parts bright.

Sample order:
nlm 24242-01-12201

Note:
These stainless steel pillow block bearings have the same operating dimensions as the standard bearing housings of the major manufacturers, and can so be used or exchanged in existing constructions.

Drawing reference:
1) ball bearing
2) plain bearing

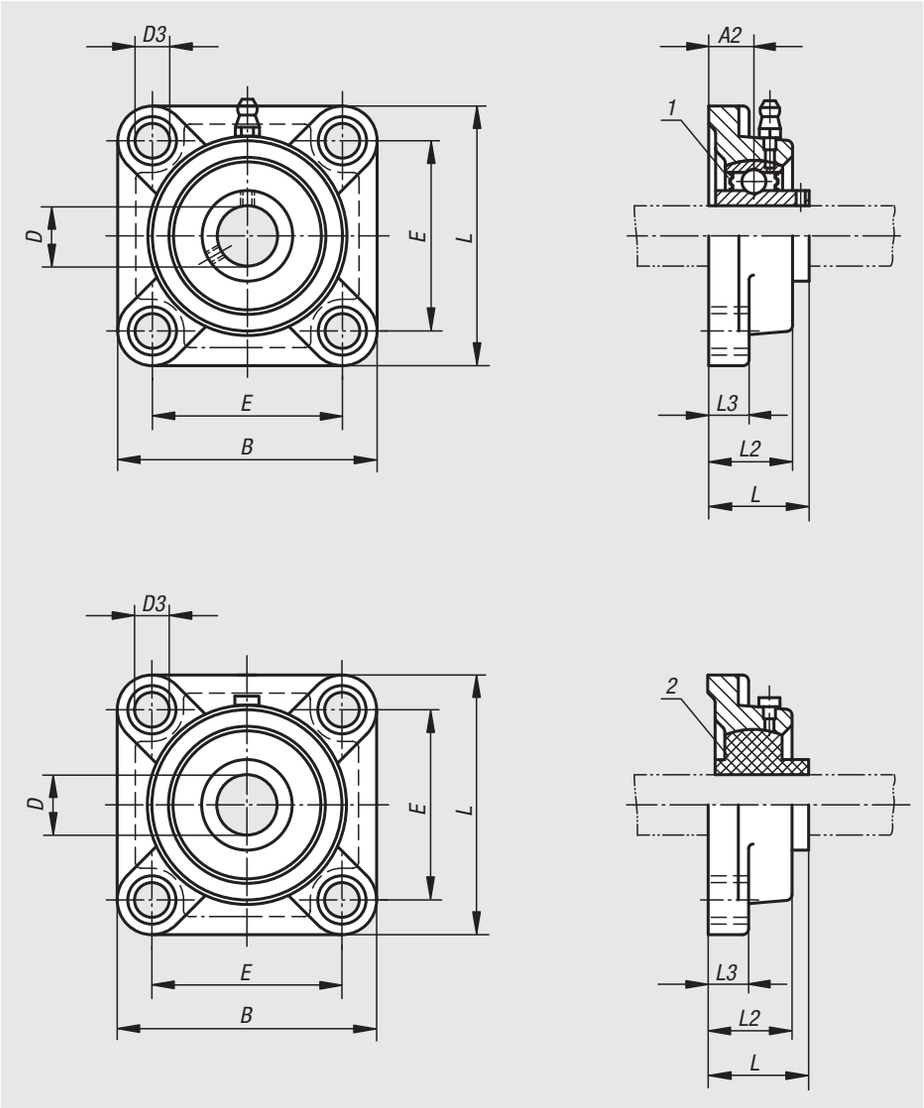

Order No.	Housing	D	B	E	D3	L	L2	L3	A2
24242-01-12201	201	12	86	64	64	33,2	25,7	12	14,9
24242-01-15202	202	15	86	64	64	33,2	25,7	12	14,9
24242-01-20204	204	20	86	64	64	33,2	25,7	12	14,9
24242-01-25205	205	25	95	70	70	35,5	27,3	14	15,8
24242-01-30206	206	30	108	83	83	40,1	30,7	14	17,9
24242-01-35207	207	35	117	92	92	44,4	34	14,3	19
24242-01-40208	208	40	130	102	102	51,2	36	14,3	21

Pillow block bearing flange type MUCF

2-hole stainless steel

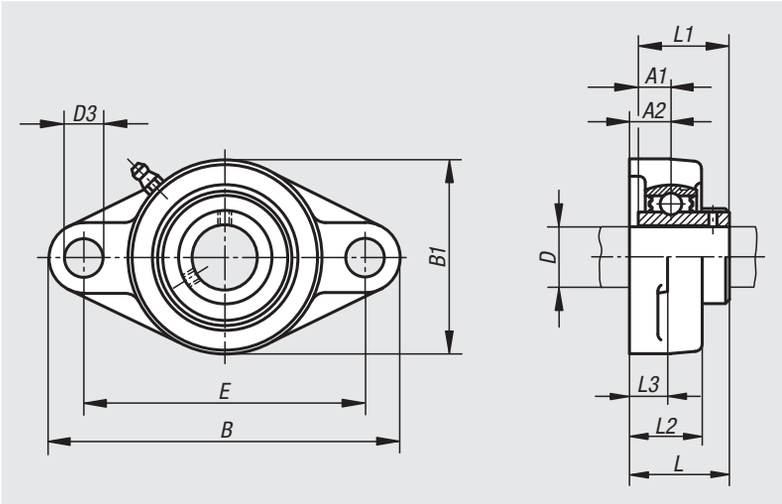

Material:
Housing, stainless steel 1.4301.
Bearing, stainless steel 1.4125.
Seal, rubber NBR.

Version:
Bright.

Sample order:
nlm 24244-20204

Note:
Pillow block bearings consist of a sealed single-row ball bearing with a spherical outer ring which is mounted in a housing. Because of the spherical outer surface of the bearing, shaft misalignment can be compensated for. The bearings are manufactured with a plus tolerance. This results in transition or press fits when using shafts with h-tolerances. The shaft is secured by grub screws on the inner ring.

In normal applications, pillow block bearings are maintenance-free due to the lifetime lubrication. In difficult environmental conditions re-lubrication can be carried out over the grease nipple.

All housing dimensions are nominal dimensions for which the usual casting tolerances must be taken into consideration.

Temperature range:
-15 °C to +100 °C.

Order No.	Bearing	Housing	D	A1	A2	B	B1	D3	E	L	L1	L2	L3	α	Fastening screw
24244-20204	MUC 204	FL 204	20	12,7	15	113	60	12	90	33,3	31	25,5	11	10°	M10
24244-25205	MUC 205	FL 205	25	14,3	16	130	68	16	99	35,8	34,1	27	13	10°	M14
24244-30206	MUC 206	FL 206	30	15,9	18	148	80	16	117	40,2	38,1	31	13	10°	M14
24244-35207	MUC 207	FL 207	35	17,5	19	161	90	16	130	44,4	42,9	34	14	10°	M14
24244-40208	MUC 208	FL 208	40	19	21	175	100	16	144	51,2	49,2	36	14	10°	M14
24244-45209	MUC 209	FL 209	45	19	22	188	108	19	148	52,2	49,2	38	15	10°	M16
24244-50210	MUC 210	FL 210	50	19	22	197	115	19	157	54,6	51,6	40	15	10°	M16

Pillow block bearing flange type

2-hole

Material:
Housing 1.4301.
Ball bearing 1.4112.
Plain bearing POM.

Version:
Plain bearing white.
Stainless steel parts bright.

Sample order:
nlm 24244-01-12201

Note:
These stainless steel pillow block bearings have the same operating dimensions as the standard bearing housings of the major manufacturers, and can so be used or exchanged in existing constructions.

Drawing reference:
1) ball bearing
2) plain bearing

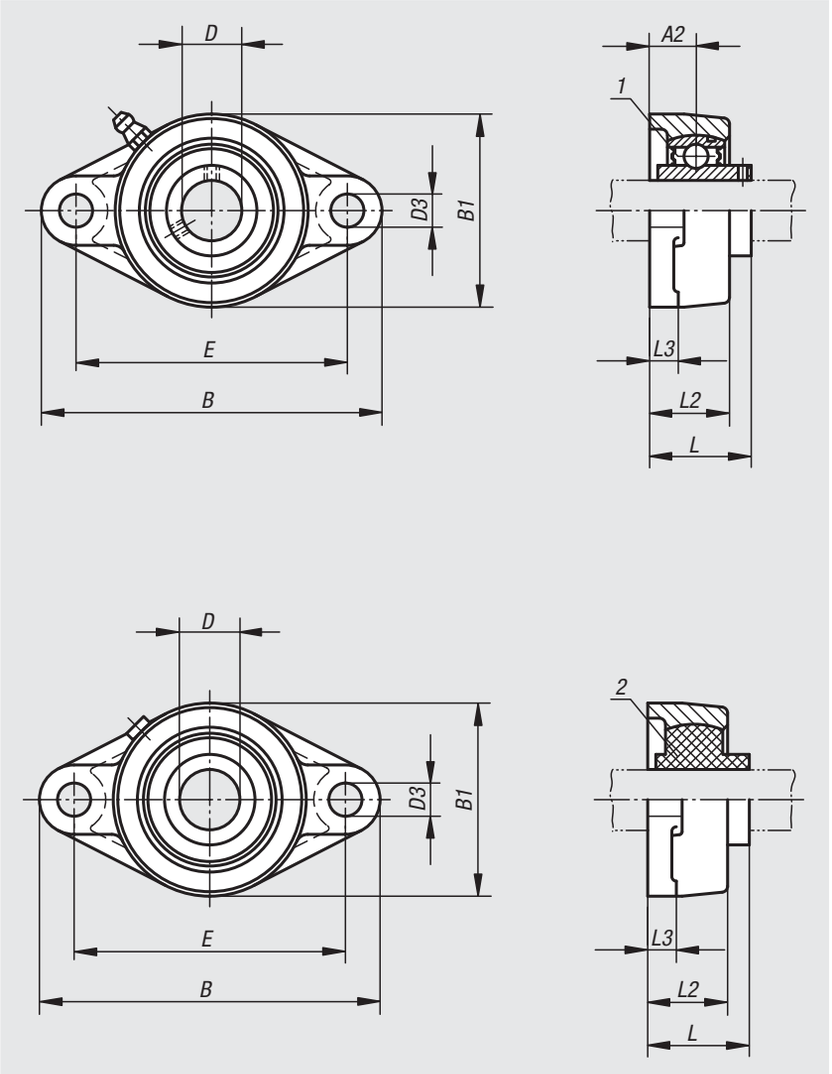

With ball bearing

Order No.	Housing	D	B	E	B1	D3	L	L2	L3	A2
24244-01-12201	201	12	112	90	60	11	33	26	11	14,7
24244-01-15202	202	15	112	90	60	11	33	26	11	14,7
24244-01-20204	204	20	112	90	60	11	33	26	11	14,7
24244-01-25205	205	25	125	99	67,5	11,5	35,5	27	13	15,8
24244-01-30206	206	30	141	117	80	11,5	40	30,2	14,3	17,8
24244-01-35207	207	35	156	130	90	13	44,5	34	14,3	19,1
24244-01-40208	208	40	172	144	100	13	51,2	36	14,3	21

With POM plain bearing

Order No.	Housing	D	B	E	B1	D3	L	L2	L3
24244-01-112201	201	12	112	90	60	11	33	26	11
24244-01-115202	202	15	112	90	60	11	33	26	11
24244-01-120204	204	20	112	90	60	11	33	26	11
24244-01-125205	205	25	125	99	67,5	11,5	35,5	27	13
24244-01-130206	206	30	141	117	80	11,5	40	30,2	14,3
24244-01-135207	207	35	156	130	90	13	44,5	34	14,3
24244-01-140208	208	40	172	144	100	13	51,2	36	14,3

Insert bearing MUC

stainless steel

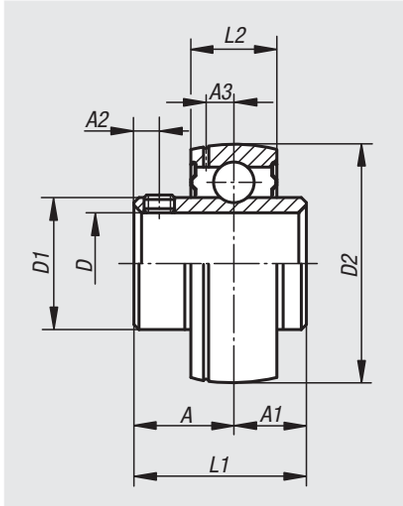

Material:
Stainless steel 1.4125.
Seal, rubber NBR.

Version:
Sealed on both sides with a spherical outer ring.
Can be re-lubricated.

Sample order:
nlm 24248-20204

Note:
The internal construction of the insert bearings corresponds to that of standard Series 6200 and 6300 radial ball bearing. However, they have wider inner rings for easier fastening on shafts. The inner rings are manufactured with a plus tolerance. This results in transition or press fits when using shafts with h-tolerances. The shaft is secured by 2 grub screws positioned 120° apart on the inner ring.

The insert bearings are ready to install and are permanently lubricated with a suitable ball bearing grease. In normal applications, re-lubrication is not necessary.

Temperature range:
-15 °C to +100 °C.

Order No.	Bearing	D	A	A1	A2	A3	D1	D2	L1	L2	Grub screw	Dynamic base loads kN	Static base loads kN
24248-20204	MUC 204	20	18,3	12,7	4,8	3,7	29	47	31	17	M6x0,75	9,88	6,2
24248-25205	MUC 205	25	19,8	14,3	5	3,9	34	52	34,1	17	M6x0,75	7,36	6,98
24248-30206	MUC 206	30	22,2	15,9	5	5	40,5	62	38,1	19	M6x0,75	14,97	10,04
24248-35207	MUC 207	35	25,4	17,5	7	5,7	48	72	42,9	20	M8x1	19,75	13,67
24248-40208	MUC 208	40	30,2	19	8	6,2	53	80	49,2	21	M8x1	22,71	15,94
24248-45209	MUC 209	45	30,2	19	8	6,4	57,3	85	49,2	22	M8x1	24,36	17,71
24248-50210	MUC 210	50	32,6	19	10	6,5	63	90	51,6	24	M10x1,25	26,98	19,84

Pillow block bearing pedestal type

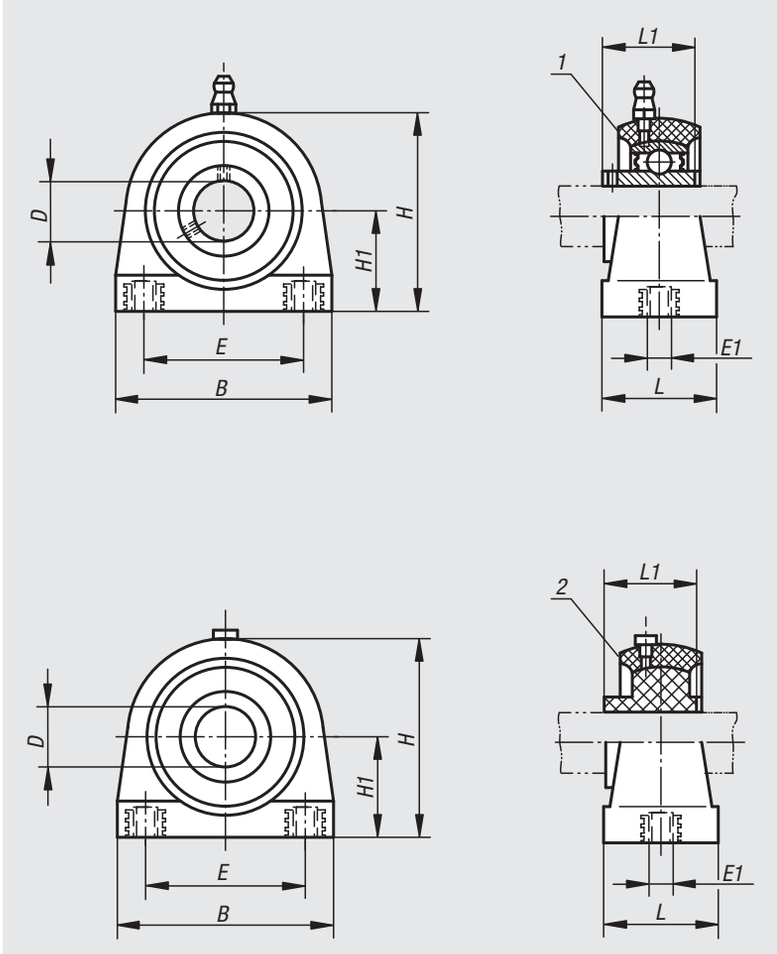

Material:
Housing plastic.
Ball bearing stainless steel 1.4112.
Plain bearing insert POM.
Bushes and grease nipple stainless steel 1.4301.

Version:
Plain bearing insert white.
Housing green.
Stainless steel parts bright.

Sample order:
nlm 24262-01-12201

Note:
The housings are very robust, hard wearing and shock proof. They are resistant to most alkaline solutions, weak acids (PH 4-9) and brines. In contrast to cast or steel housings the special plastic in these housings prevent the formation of micro-organisms.

Drawing reference:
1) ball bearing
2) plain bearing

With ball bearing

Order No.	Housing	D	H1	B	H	E	E1	L	L1
24262-01-12201	201	12	33,3	72,8	66	50,8	M8	34,5	31
24262-01-15202	202	15	33,3	72,8	66	50,8	M8	34,5	31
24262-01-20204	204	20	33,3	72,8	66	50,8	M8	34,5	31
24262-01-25205	205	25	36,5	76,2	73,5	50,8	M10	39,5	34
24262-01-30206	206	30	42,9	101	84	76,2	M10	42,5	38,1
24262-01-35207	207	35	47,6	110	95	82,6	M10	47,5	42,9
24262-01-40208	208	40	49,2	120	100,5	88,9	M12	48	49,2

With POM plain bearing

Order No.	Housing	D	H1	B	H	E	E1	L	L1
24262-01-112201	201	12	33,3	72,8	66	50,8	M8	34,5	31
24262-01-115202	202	15	33,3	72,8	66	50,8	M8	34,5	31
24262-01-120204	204	20	33,3	72,8	66	50,8	M8	34,5	31
24262-01-125205	205	25	36,5	76,2	73,5	50,8	M10	39,5	34
24262-01-130206	206	30	42,5	101	84	76,2	M10	42,5	38,1
24262-01-135207	207	35	47,6	110	95	82,6	M10	47,5	42,9
24262-01-140208	208	40	49,2	120	100,5	88,9	M12	48	49,2

Pillow block bearing flange type

Material:
Housing plastic.
Ball bearing stainless steel 1.4112.
Plain bearing insert POM.
Bushes and grease nipple stainless steel 1.4301.

Version:
Plain bearing insert white.
Housing green.
Stainless steel parts bright.

Sample order:
nlm 24264-01-12201

Note:
The housings are very robust, hard wearing and shock proof. They are resistant to most alkaline solutions, weak acids (PH 4-9) and brines. In contrast to cast or steel housings the special plastic in these housings prevent the formation of micro-organisms.

Drawing reference:
1) ball bearing
2) plain bearing

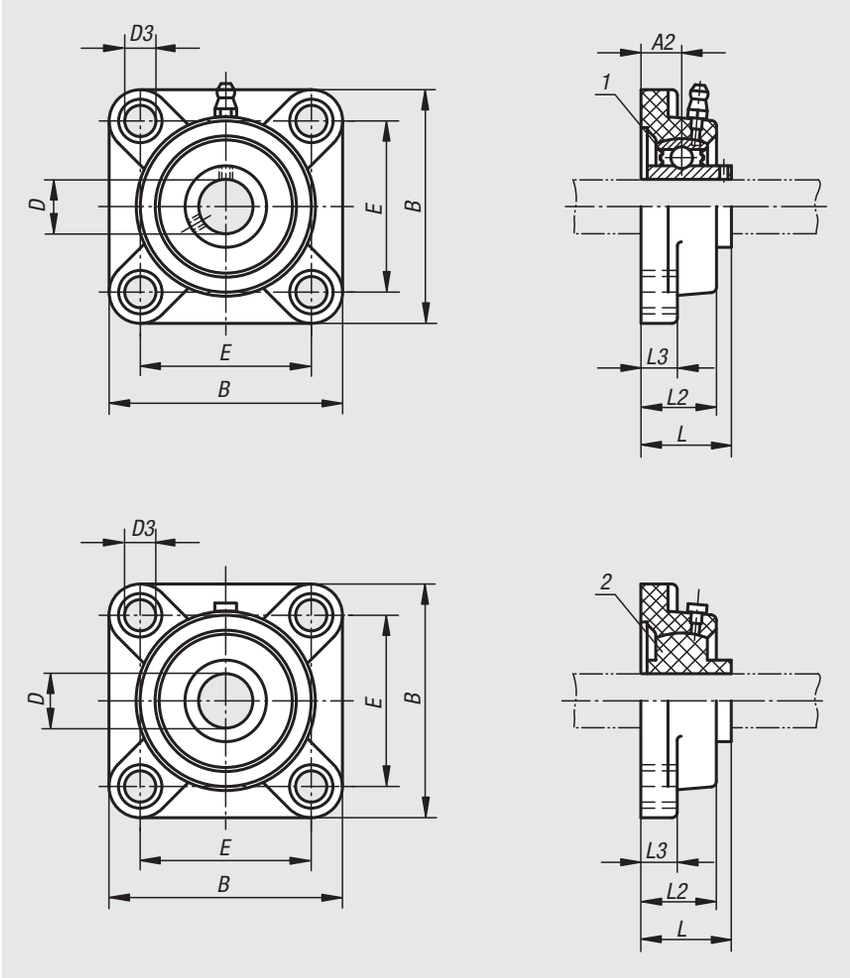

With ball bearing

Order No.	Housing	D	B	E	D3	L	L2	L3	A2
24264-01-12201	201	12	87	63,5	11	36,3	27,8	13,4	17,8
24264-01-15202	202	15	87	63,5	11	36,3	27,8	13,4	17,8
24264-01-20204	204	20	87	63,5	11	36,3	27,8	13,4	17,8
24264-01-25205	205	25	95	70	11	36,7	28	14,3	17
24264-01-30206	206	30	107	83	11	41,4	31,5	14,3	19,2
24264-01-35207	207	35	118	92	13	46,9	34,8	15,5	21,5
24264-01-40208	208	40	130	102	14	53,2	37,5	17	23

With POM plain bearing

Order No.	Housing	D	B	E	D3	L	L2	L3
24264-01-112201	201	12	87	63,5	11	36,3	27,8	13,4
24264-01-115202	202	15	87	63,5	11	36,3	27,8	13,4
24264-01-120204	204	20	87	63,5	11	36,3	27,8	13,4
24264-01-125205	205	25	95	70	11	36,7	28	14,3
24264-01-130206	206	30	107	83	11	41,4	31,5	14,3
24264-01-135207	207	35	118	92	13	46,9	34,8	15,5
24264-01-140208	208	40	130	102	14	53,2	37,5	17

Pillow block bearing flange type

2-hole

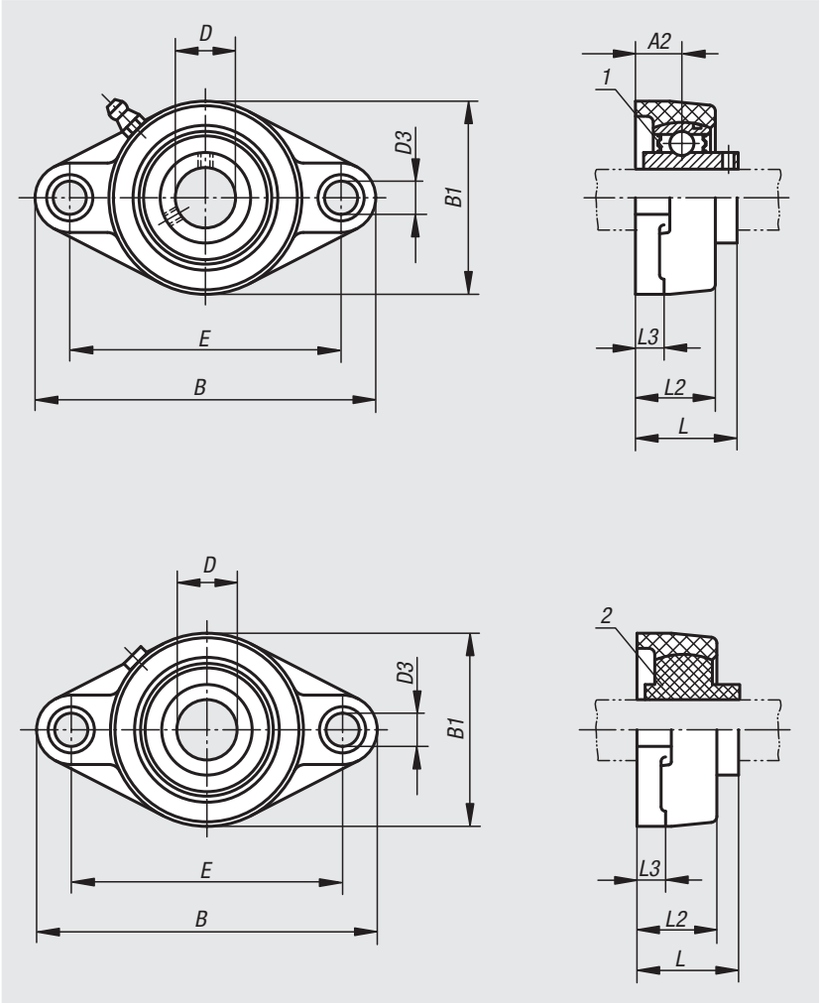

Material:
Housing plastic.
Ball bearing stainless steel 1.4112.
Plain bearing insert POM.
Bushes and grease nipple stainless steel 1.4301.

Version:
Plain bearing insert white.
Housing green.
Stainless steel parts bright.

Sample order:
nlm 24266-01-12201

Note:
The housings are very robust, hard wearing and shock proof. They are resistant to most alkaline solutions, weak acids (PH 4-9) and brines. In contrast to cast or steel housings the special plastic in these housings prevent the formation of micro-organisms.

Drawing reference:
1) ball bearing
2) plain bearing

With ball bearing

Order No.	Housing	D	B	E	B1	D3	L	L2	L3	A2
24266-01-12201	201	12	114	90	65	11	33,7	26,5	11,4	15,4
24266-01-15202	202	15	114	90	65	11	33,7	26,5	11,4	15,4
24266-01-20204	204	20	114	90	65	11	33,7	26,5	11,4	15,4
24266-01-25205	205	25	131	99	69,5	11	36,7	29,1	13,5	17
24266-01-30206	206	30	148	117	80	11	41,2	30,5	13,3	19
24266-01-35207	207	35	164	130	90	13	43,4	32,8	16,1	18
24266-01-40208	208	40	176	144	100	14	51,7	37,5	20	21,5

With POM plain bearing

Order No.	Housing	D	B	E	B1	D3	L	L2	L3
24266-01-112201	201	12	114	90	65	11	33,7	26,5	11,4
24266-01-115202	202	15	114	90	65	11	33,7	26,5	11,4
24266-01-120204	204	20	114	90	65	11	33,7	26,5	11,4
24266-01-125205	205	25	131	99	69,5	11	36,7	29,1	13,5
24266-01-130206	206	30	148	117	80	11	41,2	30,5	13,3
24266-01-135207	207	35	164	130	90	13	43,4	32,8	16,1
24266-01-140208	208	40	176	144	100	14	51,7	37,5	20

Notes

26000

Compression springs
Elastomer springs
Rubber buffers
Shock absorbers
Gas springs

Notes

Technical information for compression springs

Note:
The compression springs are available in four colour coded load grades. Identical spring lengths and diameters enable the interchangeability of different load grades. The lengths, diameters, force and colours comply with ISO 10243.
To extend the service life, the springs have been heat-treated, abrasive blasted and pre-stressed to block height during production.

Design:
The service life can be influenced by dividing the spring travel into the working travel and the preload travel.
The smaller the difference between the spring travel and the unloaded length, the higher the expected service life.
Select a preload as large as possible and a working travel that is as small as necessary to maximise the service life.

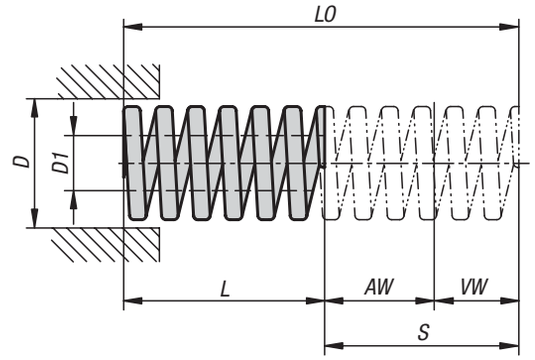

LO = unloaded length
L = loaded length
AW = working travel
VW = preload travel
S = spring travel

Ratio of loaded and unloaded spring length:

Light load				Medium load				Heavy load				Very heavy load			
Loaded length L (mm) spring travel S in % of LO			LO	Loaded length L (mm) spring travel S in % of LO			LO	Loaded length L (mm) spring travel S in % of LO			LO	Loaded length L (mm) spring travel S in % of LO			LO
Long service life S1 25 %	Medium service life S2 30 %	Maximum load ≤ S 40 %	Unloaded length LO mm	Long service life S1 25 %	Medium service life S2 30 %	Maximum load ≤ S 37,5 %	Unloaded length LO mm	Long service life S1 20 %	Medium service life S2 25 %	Maximum load ≤ S 30 %	Unloaded length LO mm	Long service life S1 17 %	Medium service life S2 20 %	Maximum load ≤ S 25 %	Unloaded length LO mm
19	17,5	14,8	25	19	17,5	15,5	25	20	19	17,5	25	20,8	20	19	25
24	22,5	19,5	32	24	22,5	20	32	26	24	22,5	32	26,5	26	24	32
25,8	27	23	38	28,5	27	24	38	30,5	28,5	27	38	31,5	30,5	28,5	38
33	31	26	44	33	31	27	44	35	33	31	44	36,5	35	33	44
38	36	31	51	38	36	32	51	41	38	36	51	42,5	41	38	51
48	45	39	64	48	45	40	64	51	48	45	64	53	51	48	64
57	53	46	76	57	53	47	76	61	57	53	76	63	61	57	76
67	62	54	89	67	62	56	89	71	67	62	89	74	71	67	89
77	71	61	102	77	71	64	102	82	77	71	102	85	82	77	102
86	81	69	115	86	81	72	115	92	86	81	115	95	92	86	115
95	89	76	127	95	89	79	127	102	95	89	127	105	102	95	127
105	98	84	140	105	98	88	140	112	105	98	140	116	112	105	140
114	106	91	152	114	106	95	152	122	114	106	152	126	122	114	152
133	125	107	178	133	125	111	178	143	133	125	178	148	143	133	178
152	142	122	203	152	142	127	203	162	152	142	203	168	162	152	203
-	-	-	-	172	160	143	229	-	-	-	-	-	-	-	-
191	178	152	254	191	178	159	254	203	191	178	254	211	203	191	254
229	213	183	305	229	213	191	305	244	229	213	305	253	244	229	305

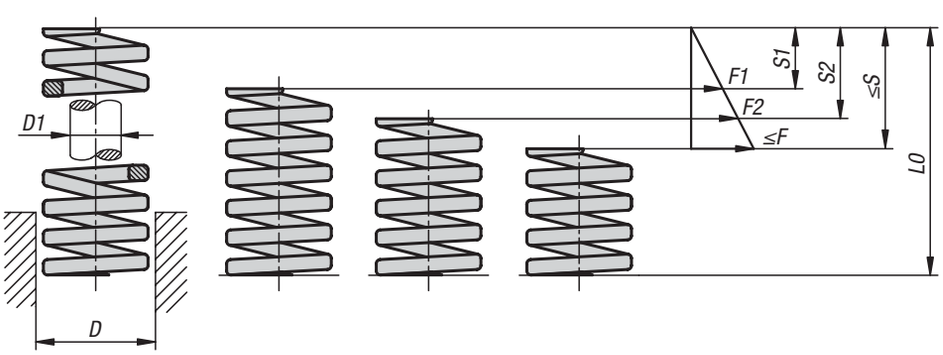

Compression springs

ISO 10243, light load

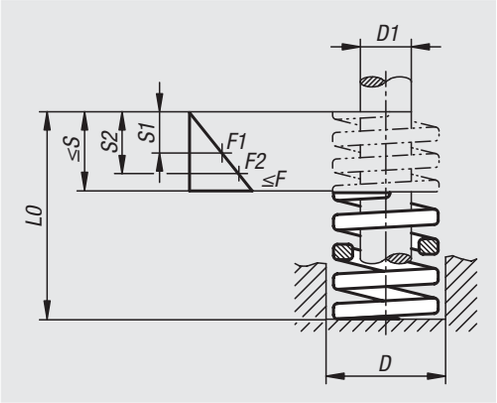

Material:
Chrome silicon steel.

Version:
Green

Sample order:
nlm 26000-1005025

Note:
Lengths, diameters, forces and colour correspond to ISO 10243.

F1 indicates the load on the spring for a long service life with spring travel of 25% of L0.
F2 indicates the load on the spring for a medium service life with spring travel of 30% of L0.
Fmax. indicates the maximum load rating of the spring with spring travel of 40% of L0.

F = force required to compress the spring 1 mm.

Order No.	D	D1	L0	F	F1 N	F2 N	F max. N	S1	S2	S max.
26000-1005025	10	5	25	10	63	17	100	6,3	7,5	10
26000-1005032	10	5	32	8,5	68	82	109	8	9,6	13
26000-1005038	10	5	38	6,8	65	78	103	9,5	11	15
26000-1005044	10	5	44	6	66	78	106	11	13	18
26000-1005051	10	5	51	5	64	77	102	13	15	20
26000-1005064	10	5	64	4,3	69	83	110	16	19	26
26000-1005076	10	5	76	3,2	61	73	97	19	23	30
26000-1005305	10	5	305	1,1	84	101	134	76	92	122
26000-1206025	12,5	6,3	25	17,9	112	134	179	6,3	7,5	10
26000-1206032	12,5	6,3	32	16,4	131	157	210	8	9,6	13
26000-1206038	12,5	6,3	38	13,6	129	155	207	9,5	11	15
26000-1206044	12,5	6,3	44	12,1	133	160	213	11	13	18
26000-1206051	12,5	6,3	51	11,4	145	174	233	13	15	20
26000-1206064	12,5	6,3	64	9,3	149	179	238	16	19	26
26000-1206076	12,5	6,3	76	7,1	135	162	216	19	23	30
26000-1206089	12,5	6,3	89	5,4	120	144	192	22	27	36
26000-1206115	12,5	6,3	115	4,4	125	150	201	29	34	46
26000-1206140	12,5	6,3	140	3,7	130	155	207	35	42	56
26000-1206165	12,5	6,3	165	2,6	107	129	172	41	50	66
26000-1206190	12,5	6,3	190	2	95	114	152	48	57	76
26000-1206305	12,5	6,3	305	1,4	107	128	171	76	92	122

Compression springs

ISO 10243, light load

Order No.	D	D1	LO	F	F1 N	F2 N	F max. N	S1	S2	S max.
26000-1608025	16	8	25	23,4	146	176	234	6,3	7,5	10
26000-1608032	16	8	32	22,9	183	220	293	8	9,6	13
26000-1608038	16	8	38	19,3	183	220	293	9,5	11	15
26000-1608044	16	8	44	17,1	188	226	301	11	13	18
26000-1608051	16	8	51	15,7	200	240	320	13	15	20
26000-1608064	16	8	64	10,7	171	205	274	16	19	26
26000-1608076	16	8	76	10	190	228	304	19	23	30
26000-1608089	16	8	89	8,6	191	230	306	22	27	36
26000-1608102	16	8	102	7,8	199	239	318	26	31	41
26000-1608305	16	8	305	2,5	191	229	305	76	92	122
26000-2010025	20	10	25	55,6	348	417	556	6,3	7,5	10
26000-2010032	20	10	32	42,7	342	410	547	8	9,6	13
26000-2010038	20	10	38	33,9	322	386	515	9,5	11	15
26000-2010044	20	10	44	28,5	314	376	502	11	13	18
26000-2010051	20	10	51	24,7	315	378	504	13	15	20
26000-2010064	20	10	64	19,3	308	370	493	16	19	26
26000-2010076	20	10	76	16,1	306	367	489	19	23	30
26000-2010089	20	10	89	13,5	299	359	479	22	27	36
26000-2010102	20	10	102	11,8	301	362	482	26	31	41
26000-2010115	20	10	115	10,4	299	358	478	29	35	46
26000-2010127	20	10	127	9,4	298	358	478	32	38	51
26000-2010140	20	10	140	8,5	297	357	476	35	42	56
26000-2010152	20	10	152	7,9	299	359	479	38	46	61
26000-2010305	20	10	305	3,8	288	346	462	76	92	122
26000-2512025	25	12,5	25	100	625	750	1000	6,3	7,5	10
26000-2512032	25	12,5	32	80,6	644	773	1030	8	9,6	13
26000-2512038	25	12,5	38	64,8	616	739	985	9,5	11	15
26000-2512044	25	12,5	44	53,3	586	704	938	11	13	18
26000-2512051	25	12,5	51	46,2	589	707	942	13	15	20
26000-2512064	25	12,5	64	35,7	572	686	915	16	19	26
26000-2512076	25	12,5	76	29,2	556	667	889	19	23	30
26000-2512089	25	12,5	89	24,8	552	662	883	22	27	36
26000-2512102	25	12,5	102	21,2	540	648	865	26	31	41
26000-2512115	25	12,5	115	18,7	539	646	862	29	35	46
26000-2512127	25	12,5	127	16,7	532	638	851	32	38	51
26000-2512140	25	12,5	140	15,2	532	638	851	35	42	56
26000-2512152	25	12,5	152	13,9	528	634	845	38	46	61
26000-2512178	25	12,5	178	11,9	530	635	847	45	53	71
26000-2512203	25	12,5	203	10,5	534	641	855	51	61	81
26000-2512305	25	12,5	305	7	533	639	853	76	92	122

Compression springs

ISO 10243, moderate load

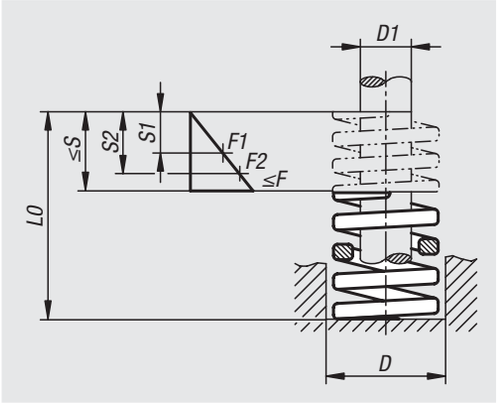

Material:
Chrome silicon steel.

Version:
blue.

Sample order:
nlm 26001-1005025

Note:
Lengths, diameters, forces and colour correspond to ISO 10243.

F1 indicates the load on the spring for a long service life with spring travel of 25% of L0.
F2 indicates the load on the spring for a medium service life with spring travel of 30% of L0.
Fmax. indicates the maximum load rating of the spring with spring travel of 37.5% of L0.

F = force required to compress the spring 1 mm.

Order No.	D	D1	L0	F	F1 N	F2 N	F max. N	S1	S2	S max.
26001-1005025	10	5	25	16	100	120	150	6,3	7,5	9,4
26001-1005032	10	5	32	13	104	125	156	8	9,6	12
26001-1005038	10	5	38	11,9	113	136	170	9,5	11	14
26001-1005044	10	5	44	10,3	113	136	170	11	13	17
26001-1005051	10	5	51	8,9	113	136	170	13	15	19
26001-1005064	10	5	64	7,5	120	144	180	16	19	24
26001-1005076	10	5	76	5,3	101	121	151	19	23	29
26001-1005305	10	5	305	1,6	122	146	183	76	92	114
26001-1206025	12,5	6,3	25	30	188	225	281	6,3	7,5	9,4
26001-1206032	12,5	6,3	32	24,8	198	238	298	8	9,6	12
26001-1206038	12,5	6,3	38	21,4	203	244	305	9,5	11	14
26001-1206044	12,5	6,3	44	18,5	204	244	305	11	13	17
26001-1206051	12,5	6,3	51	15,5	198	237	296	13	15	19
26001-1206064	12,5	6,3	64	12,1	194	232	290	16	19	24
26001-1206076	12,5	6,3	76	10,2	194	233	291	19	23	29
26001-1206089	12,5	6,3	89	8,4	187	224	280	22	27	33
26001-1206305	12,5	6,3	305	2,1	160	192	240	76	92	114

Compression springs

ISO 10243, moderate load

Order No.	D	D1	LO	F	F1 N	F2 N	F max. N	S1	S2	S max.
26001-1608025	16	8	25	49,4	309	371	463	6,3	7,5	9,4
26001-1608032	16	8	32	37,1	297	356	445	8	9,6	12
26001-1608038	16	8	38	33,9	322	386	483	9,5	11	14
26001-1608044	16	8	44	30	330	396	495	11	13	17
26001-1608051	16	8	51	26,4	337	404	505	13	15	19
26001-1608064	16	8	64	20,5	328	394	492	16	19	24
26001-1608076	16	8	76	17,8	338	406	507	19	23	29
26001-1608089	16	8	89	15,2	338	406	507	22	27	33
26001-1608102	16	8	102	13,5	344	413	516	26	31	38
26001-1608305	16	8	305	4,8	366	439	549	76	92	114
26001-2010025	20	10	25	90,3	564	677	847	6,3	7,5	9,4
26001-2010032	20	10	32	68,3	546	656	820	8	9,6	12
26001-2010038	20	10	38	55,1	523	628	785	9,5	11	14
26001-2010044	20	10	44	45	495	594	743	11	13	17
26001-2010051	20	10	51	38,9	496	595	744	13	15	19
26001-2010064	20	10	64	30,4	486	584	730	16	19	24
26001-2010076	20	10	76	24,8	471	565	707	19	23	29
26001-2010089	20	10	89	21,3	473	569	711	22	27	33
26001-2010102	20	10	102	18,6	474	568	710	26	31	38
26001-2010115	20	10	115	16,3	469	563	704	29	35	43
26001-2010127	20	10	127	14,7	467	560	700	32	38	48
26001-2010140	20	10	140	13,3	466	559	698	35	42	53
26001-2010152	20	10	152	12	456	547	684	38	46	57
26001-2010305	20	10	305	6,1	462	554	693	76	92	114
26001-2512025	25	12,5	25	151	942	1130	1410	6,3	7,5	9,4
26001-2512032	25	12,5	32	119	948	1140	1420	8	9,6	12
26001-2512038	25	12,5	38	93,4	887	1060	1330	9,5	11	14
26001-2512044	25	12,5	44	83,2	915	1100	1370	11	13	17
26001-2512051	25	12,5	51	68,9	878	1050	1320	13	15	19
26001-2512064	25	12,5	64	53,2	851	1020	1280	16	19	24
26001-2512076	25	12,5	76	43,3	823	987	1230	19	23	29
26001-2512089	25	12,5	89	38	846	1010	1270	22	27	33
26001-2512102	25	12,5	102	33	842	1010	1260	26	31	38
26001-2512115	25	12,5	115	29,3	842	1010	1260	29	35	43
26001-2512127	25	12,5	127	26,4	838	1010	1260	32	38	48
26001-2512140	25	12,5	140	23,8	833	1000	1250	35	42	53
26001-2512152	25	12,5	152	21,8	828	994	1240	38	46	57
26001-2512178	25	12,5	178	18,5	823	988	1230	45	53	67
26001-2512203	25	12,5	203	16	810	972	1210	51	61	76
26001-2512305	25	12,5	305	10,5	797	957	1200	76	92	114

Compression springs

ISO 10243, heavy load

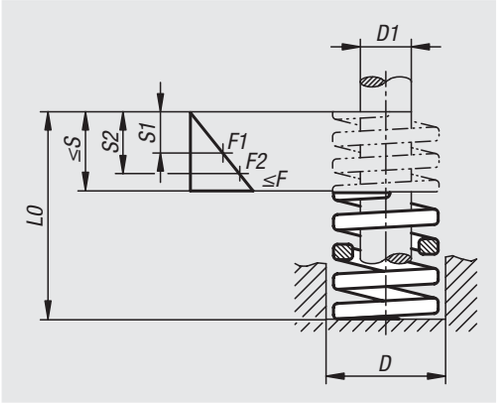

Material:
Chrome silicon steel.

Version:
Red

Sample order:
nlm 26002-1005025

Note:
Lengths, diameters, forces and colour correspond to ISO 10243.

F1 indicates the load on the spring for a long service life with spring travel of 20% of L0.
F2 indicates the load on the spring for a medium service life with spring travel of 25% of L0.
Fmax. indicates the maximum load rating of the spring with spring travel of 30% of L0.

F = force required to compress the spring 1 mm.

Order No.	D	D1	L0	F	F1 N	F2 N	F max. N	S1	S2	S max.
26002-1005025	10	5	25	22,1	111	138	166	5	6,3	7,5
26002-1005032	10	5	32	17,5	112	140	168	6,4	8	9,6
26002-1005038	10	5	38	17,1	130	162	195	7,6	9,5	11
26002-1005044	10	5	44	15	132	165	198	8,8	11	13
26002-1005051	10	5	51	12,8	131	163	196	10	13	15
26002-1005064	10	5	64	10,7	137	171	205	13	16	19
26002-1005076	10	5	76	7,5	114	143	171	15	19	23
26002-1005305	10	5	305	2,1	128	160	192	61	76	92
26002-1206025	12,5	6,3	25	42,1	211	263	316	5	6,3	7,5
26002-1206032	12,5	6,3	32	33,2	212	266	319	6,4	8	9,6
26002-1206038	12,5	6,3	38	29,3	223	278	334	7,6	9,5	11
26002-1206044	12,5	6,3	44	24,6	216	271	325	8,8	11	13
26002-1206051	12,5	6,3	51	19,6	200	250	300	10	13	15
26002-1206064	12,5	6,3	64	15	192	240	288	13	16	19
26002-1206076	12,5	6,3	76	13,2	201	251	301	15	19	23
26002-1206089	12,5	6,3	89	11,4	203	254	304	18	22	27
26002-1206305	12,5	6,3	305	2,8	171	214	256	61	76	92

Compression springs

ISO 10243, heavy load

Order No.	D	D1	LO	F	F1 N	F2 N	F max. N	S1	S2	S max.
26002-1608025	16	8	25	75,7	379	473	568	5	6,3	7,5
26002-1608032	16	8	32	52,8	338	422	507	6,4	8	9,6
26002-1608038	16	8	38	48,5	369	461	553	7,6	9,5	11
26002-1608044	16	8	44	42,8	377	471	565	8,8	11	13
26002-1608051	16	8	51	37,1	378	473	568	10	13	15
26002-1608064	16	8	64	30,3	388	485	582	13	16	19
26002-1608076	16	8	76	25,7	391	488	586	15	19	23
26002-1608089	16	8	89	21,7	386	483	579	18	22	27
26002-1608102	16	8	102	19,3	394	492	591	20	26	31
26002-1608305	16	8	305	7,1	433	541	650	61	76	92
26002-2010025	20	10	25	216	1080	1350	1620	5	6,3	7,5
26002-2010032	20	10	32	168	1080	1340	1610	6,4	8	9,6
26002-2010038	20	10	38	129	980	1230	1470	7,6	9,5	11
26002-2010044	20	10	44	112	986	1230	1480	8,8	11	13
26002-2010051	20	10	51	94	959	1200	1440	10	13	15
26002-2010064	20	10	64	72,1	923	1150	1380	13	16	19
26002-2010076	20	10	76	59,7	907	1130	1360	15	19	23
26002-2010089	20	10	89	50,5	899	1120	1350	18	22	27
26002-2010102	20	10	102	44,2	902	1130	1350	20	26	31
26002-2010115	20	10	115	38,4	883	1100	1320	23	29	35
26002-2010127	20	10	127	34,1	866	1080	1300	25	32	38
26002-2010140	20	10	140	31	868	1090	1300	28	35	42
26002-2010152	20	10	152	28,2	857	1070	1290	30	38	46
26002-2010305	20	10	305	15	915	1140	1370	61	76	92
26002-2512025	25	12,5	25	380	1900	2380	2850	5	6,3	7,5
26002-2512032	25	12,5	32	276	1770	2210	2650	6,4	8	9,6
26002-2512038	25	12,5	38	220	1670	2090	2500	7,6	9,5	11
26002-2512044	25	12,5	44	185	1620	2030	2440	8,8	11	13
26002-2512051	25	12,5	51	157	1600	2010	2410	10	13	15
26002-2512064	25	12,5	64	122	1560	1950	2330	13	16	19
26002-2512076	25	12,5	76	100	1520	1900	2280	15	19	23
26002-2512089	25	12,5	89	84,4	1500	1880	2250	18	22	27
26002-2512102	25	12,5	102	73,5	1500	1870	2250	20	26	31
26002-2512115	25	12,5	115	65,2	1500	1870	2250	23	29	35
26002-2512127	25	12,5	127	57,5	1460	1830	2190	25	32	38
26002-2512140	25	12,5	140	52,1	1460	1820	2190	28	35	42
26002-2512152	25	12,5	152	48	1460	1820	2190	30	38	46
26002-2512178	25	12,5	178	40,9	1460	1820	2180	36	45	53
26002-2512203	25	12,5	203	35,7	1450	1810	2170	41	51	61
26002-2512305	25	12,5	305	22,9	1400	1750	2100	61	76	92

Compression springs

ISO 10243, very heavy load

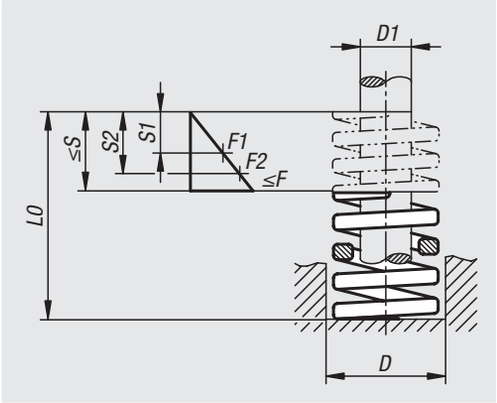

Material:
Chrome silicon steel.

Version:
yellow.

Sample order:
nlm 26003-1005025

Note:
Lengths, diameters, forces and colour correspond to ISO 10243.

F1 indicates the load on the spring for a long service life with spring travel of 17% of L0.
F2 indicates the load on the spring for a medium service life with spring travel of 20% of L0.
Fmax. indicates the maximum load rating of the spring with spring travel of 25% of L0.

F = force required to compress the spring 1 mm.

Order No.	D	D1	L0	F	F1 N	F2 N	F max. N	S1	S2	S max.
26003-1005025	10	5	25	32,5	138	163	203	4,3	5	6,3
26003-1005032	10	5	32	25,1	137	161	201	5,4	6,4	8
26003-1005038	10	5	38	20,9	135	159	199	6,5	7,6	9,5
26003-1005044	10	5	44	17,9	134	158	197	7,5	8,8	11
26003-1005051	10	5	51	15	130	153	191	8,7	10	13
26003-1005064	10	5	64	12	131	154	192	11	13	16
26003-1005076	10	5	76	10	129	152	190	13	15	19
26003-1005305	10	5	305	2,4	124	146	183	52	61	76
26003-1206025	12,5	6,3	25	58,4	248	292	365	4,3	5	6,3
26003-1206032	12,5	6,3	32	44,4	242	284	355	5,4	6,4	8
26003-1206038	12,5	6,3	38	36	233	274	342	6,5	7,6	9,5
26003-1206044	12,5	6,3	44	30,9	231	272	340	7,5	8,8	11
26003-1206051	12,5	6,3	51	27	234	275	344	8,7	10	13
26003-1206064	12,5	6,3	64	21,6	235	276	346	11	13	16
26003-1206076	12,5	6,3	76	17,8	230	271	338	13	15	19
26003-1206089	12,5	6,3	89	15,2	230	271	338	15	18	22
26003-1206305	12,5	6,3	305	4,3	223	262	328	52	61	76

Compression springs

ISO 10243, very heavy load

Order No.	D	D1	LO	F	F1 N	F2 N	F max. N	S1	S2	S max.
26003-1608025	16	8	25	126	533	628	784	4,3	5	6,3
26003-1608032	16	8	32	92,8	505	594	742	5,4	6,4	8
26003-1608038	16	8	38	74,9	484	569	712	6,5	7,6	9,5
26003-1608044	16	8	44	63	471	554	693	7,5	8,8	11
26003-1608051	16	8	51	55,1	478	562	703	8,7	10	13
26003-1608064	16	8	64	42,9	467	549	686	11	13	16
26003-1608076	16	8	76	35,3	456	537	671	13	15	19
26003-1608089	16	8	89	29,8	451	530	663	15	18	22
26003-1608102	16	8	102	26,1	453	532	666	17	20	26
26003-1608305	16	8	305	8,5	443	521	652	52	61	76
26003-2010025	20	10	25	293	1250	1470	1830	4,3	5	6,3
26003-2010032	20	10	32	224	1220	1430	1790	5,4	6,4	8
26003-2010038	20	10	38	177	1140	1350	1680	6,5	7,6	9,5
26003-2010044	20	10	44	149	1110	1310	1640	7,5	8,8	11
26003-2010051	20	10	51	128	1110	1310	1630	8,7	10	13
26003-2010064	20	10	64	99	1080	1270	1580	11	13	16
26003-2010076	20	10	76	81,7	1060	1240	1550	13	15	19
26003-2010089	20	10	89	69,5	1050	1240	1550	15	18	22
26003-2010102	20	10	102	60,6	1050	1240	1550	17	20	26
26003-2010115	20	10	115	53	1040	1220	1520	20	23	29
26003-2010127	20	10	127	47,6	1030	1210	1510	22	25	32
26003-2010140	20	10	140	43	1020	1200	1510	24	28	35
26003-2010152	20	10	152	39	1010	1190	1480	26	30	38
26003-2010305	20	10	305	21,2	1100	1290	1620	52	61	76
26003-2512032	25	12,5	32	354	1930	2270	2830	5,4	6,4	8
26003-2512038	25	12,5	38	280	1810	2130	2660	6,5	7,6	9,5
26003-2512044	25	12,5	44	232	1730	2040	2550	7,5	8,8	11
26003-2512051	25	12,5	51	198	1710	2020	2520	8,7	10	13
26003-2512064	25	12,5	64	154	1670	1970	2460	11	13	16
26003-2512076	25	12,5	76	125	1620	1900	2380	13	15	19
26003-2512089	25	12,5	89	106	1600	1880	2350	15	18	22
26003-2512102	25	12,5	102	91,2	1580	1860	2330	17	20	26
26003-2512115	25	12,5	115	81,1	1590	1870	2330	20	23	29
26003-2512127	25	12,5	127	72,1	1560	1830	2290	22	25	32
26003-2512140	25	12,5	140	65,5	1560	1830	2290	24	28	35
26003-2512152	25	12,5	152	60,1	1550	1830	2280	26	30	38
26003-2512178	25	12,5	178	51,3	1550	1830	2280	30	36	45
26003-2512203	25	12,5	203	44,7	1540	1810	2270	35	41	51
26003-2512305	25	12,5	305	29,6	1530	1810	2260	52	61	76

Elastomer buffers

Shore 70A

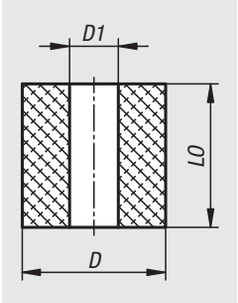

Material:
Polyurethane.

Version:
Soft Shore hardness 70A ±5.
Colour black.

Sample order:
nlm 26090-02001670

Note:
Elastomer buffers are characterised by high load capacity, long service life and high economy due to being entirely maintenance-free. They also provide outstanding protection for persons and machines since the buffers do not rupture when overloaded.
They are used to insulate and dampen air and structure-borne sound and offer progressive buffering characteristics with sustained excellent performance. They are also resistant to grease and oils and, in terms of performance and quality fulfil the requirements of the standard ISO 10069-1.

Temperature range:
-20 °C to +80 °C.

Order No.	D	D1	L0
26090-01601270	16	6,5	12,5
26090-01601670	16	6,5	16
26090-01602070	16	6,5	20
26090-01602570	16	6,5	25
26090-02001670	20	8,5	16
26090-02002070	20	8,5	20
26090-02002570	20	8,5	25
26090-02003270	20	8,5	32
26090-02502070	25	10,5	20
26090-02502570	25	10,5	25
26090-02503270	25	10,5	32
26090-02504070	25	10,5	40
26090-03203270	32	13,5	32
26090-03204070	32	13,5	40
26090-03205070	32	13,5	50
26090-03206370	32	13,5	63
26090-05003270	50	17	32
26090-05004070	50	17	40
26090-05005070	50	17	50
26090-05006370	50	17	63
26090-05008070	50	17	80
26090-05010070	50	17	100
26090-10003270	100	21	32
26090-10004070	100	21	40
26090-10005070	100	21	50
26090-10006370	100	21	63
26090-10008070	100	21	80
26090-10010070	100	21	100
26090-10012570	100	21	125

Elastomer buffers

Shore 80A

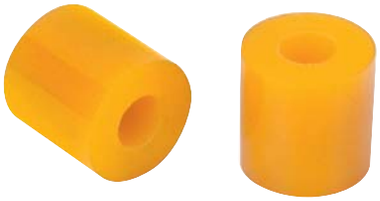

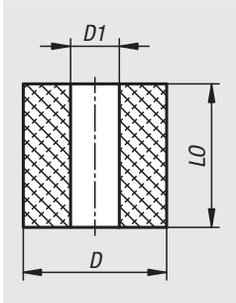

Material:
Polyurethane.

Version:
Medium Shore hardness 80A ±5.
Colour yellow.

Sample order:
nlm 26091-01601280

Note:
Elastomer buffers are characterised by high load capacity, long service life and high economy due to being entirely maintenance-free. They also provide outstanding protection for persons and machines since the buffers do not rupture when overloaded.
They are used to insulate and dampen air and structure-borne sound and offer progressive buffering characteristics with sustained excellent performance. They are also resistant to grease and oils and, in terms of performance and quality fulfil the requirements of the standard ISO 10069-1.

Temperature range:
-20 °C to +80 °C.

Order No.	D	D1	L0
26091-01601280	16	6,5	12,5
26091-01601680	16	6,5	16
26091-01602080	16	6,5	20
26091-01602580	16	6,5	25
26091-02001680	20	8,5	16
26091-02002080	20	8,5	20
26091-02002580	20	8,5	25
26091-02003280	20	8,5	32
26091-02502080	25	10,5	20
26091-02502580	25	10,5	25
26091-02503280	25	10,5	32
26091-02504080	25	10,5	40
26091-03203280	32	13,5	32
26091-03204080	32	13,5	40
26091-03205080	32	13,5	50
26091-03206380	32	13,5	63
26091-05003280	50	17	32
26091-05004080	50	17	40
26091-05005080	50	17	50
26091-05006380	50	17	63
26091-05008080	50	17	80
26091-05010080	50	17	100
26091-10003280	100	21	32
26091-10004080	100	21	40
26091-10005080	100	21	50
26091-10006380	100	21	63
26091-10008080	100	21	80
26091-10010080	100	21	100
26091-10012580	100	21	125

Elastomer buffers

Shore 90A

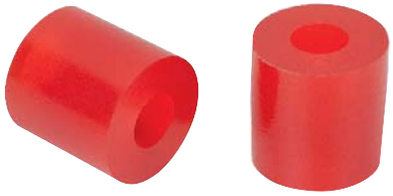

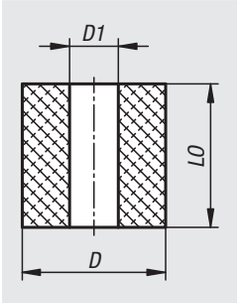

Material:
Polyurethane.

Version:
Hard Shore hardness 90A ±5.
Colour red.

Sample order:
nlm 26092-02001690

Note:
Elastomer buffers are characterised by high load capacity, long service life and high economy due to being entirely maintenance-free. They also provide outstanding protection for persons and machines since the buffers do not rupture when overloaded.
They are used to insulate and dampen air and structure-borne sound and offer progressive buffering characteristics with sustained excellent performance.
They are also resistant to grease and oils and, in terms of performance and quality fulfil the requirements of the standard ISO 10069-1.

Temperature range:
-20 °C to +80 °C.

Order No.	D	D1	L0
26092-01601290	16	6,5	12,5
26092-01601690	16	6,5	16
26092-01602090	16	6,5	20
26092-01602590	16	6,5	25
26092-02001690	20	8,5	16
26092-02002090	20	8,5	20
26092-02002590	20	8,5	25
26092-02003290	20	8,5	32
26092-02502090	25	10,5	20
26092-02502590	25	10,5	25
26092-02503290	25	10,5	32
26092-02504090	25	10,5	40
26092-03203290	32	13,5	32
26092-03204090	32	13,5	40
26092-03205090	32	13,5	50
26092-03206390	32	13,5	63
26092-05003290	50	17	32
26092-05004090	50	17	40
26092-05005090	50	17	50
26092-05006390	50	17	63
26092-05008090	50	17	80
26092-05010090	50	17	100
26092-10003290	100	21	32
26092-10004090	100	21	40
26092-10005090	100	21	50
26092-10006390	100	21	63
26092-10008090	100	21	80
26092-10010090	100	21	100
26092-10012590	100	21	125

Technical information for rubber buffers

Note:
Our rubber buffers are simple and cost-efficient standard units for elastic mounting. They are ideally suited for compressive and axial loads of a diverse range of applications. With shear stress however, they are substantially less resilient than with compressive stress. The adjacent tables provide a guide to the static load values. By high dynamic alternating loads or high frequencies the loading should be reduced proportionately.

Guide values for static load (excerpt from 26100, 26102, 26104 and 26106)

Type	D	H	Compressive loads						Shear stresses					
			Spring rate c2 in N/mm			Permissible load F in N			Spring rate cx, y in N/mm			Permissible load F in N		
			hard	medium	soft	hard	medium	soft	hard	medium	soft	hard	medium	soft
A	20	15	300	190	120	500	320	200	60	40	30	190	120	70
A	30	15	670	410	250	1100	700	400	90	60	40	350	210	130
A	30	30	240	150	100	900	570	340	50	30	20	430	280	170
A	40	30	480	300	170	1800	1110	670	90	60	30	770	500	250
A	50	20	2400	1500	900	5000	3190	1870	240	160	100	1200	770	460
A	50	40	600	380	220	2800	1750	1050	120	80	50	1280	800	460
A	75	25	5000	1655	1700	8000	5000	3300	410	260	160	2800	1750	1030
A	75	55	650	400	240	4700	3000	1750	130	80	50	2100	1300	800
B	25	20	320	160	120	490	320	190	70	45	25	230	160	90
B	30	20	660	430	260	830	520	310	100	75	50	330	210	130
B	30	30	350	220	130	750	450	280	70	50	30	350	220	130
B	40	30	550	350	210	1250	750	450	110	70	40	520	330	200
B	50	40	560	370	220	2100	1270	760	120	80	45	930	580	350
B	50	50	350	220	130	1750	1100	650	80	50	30	800	510	310
B	75	50	950	630	330	4700	2910	1720	180	120	80	1900	1200	710
C	20	25	200	130	80	300	190	120	50	30	20	150	90	60
C	30	30	590	380	220	720	450	270	90	60	50	260	170	110
C	40	30	900	570	340	1080	680	410	150	90	60	380	240	140
C	50	30	1700	1090	650	2500	1750	950	210	150	70	470	290	170
C	50	50	360	220	140	1390	870	520	80	40	30	610	390	230
C	75	50	1010	630	370	3650	2050	1200	200	130	80	1560	980	580

Type	D	H	Compressive loads	
			Spring rate c2 in N/mm	Permissible load F in N
			medium	medium
D	25	20	150	260
D	30	20	330	730
D	40	30	250	950
D	50	20	660	1750
D	75	25	1430	4650

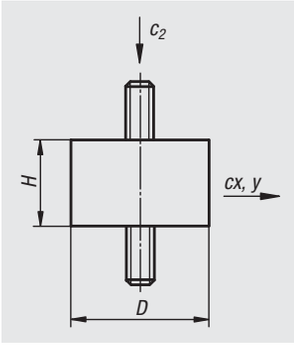

Rubber hardness:
hard = Shore 70 medium = Shore 55 soft = Shore 45
For general guidance natural rubber is ca. Shore 55.
static compression load: F (max.) = ca. 6.5 kg/cm² (63.77 N/cm²)
static axial load: F (max.) = ca. 1.5 kg/cm² (14.72 N/cm²)
by 10 % spring displacement, or transverse travel during axial load.
Naturally, much higher loads are possible without damage, but these considerably effect the rubber buffer in its primary purpose. Tensile loads are possible but should be avoided on account of the peak stress at the contact edges and the notch sensitivity of rubber.

Tolerances for rubber buffers
Permissible dimensional deviations per DIN 7751 Part 2. Permissible hardness deviation ±5 Shore A.

Synoptical Table - Properties of the Individual Material

Rubber material		Main Characteristics - Resistance to									
Abb.	Polymer	Temperature	Tensile strength	Fracture elongation	Aging	Ozone	Petrol	Oil	Acid	Alkalis	Tensile strain
NR (NK)	Natural rubber	-30 °C – +80 °C	1	1	3	4	6	6	3	3	600%
SBR	Styrene-butadiene rubber	-30 °C – +80 °C	5	2	3	4	4	5	3	3	450%
CR	Chloroprene rubber	-20 °C – +110 °C	3	2	2	2	2	2	2	2	450%
NBR	Acrylonitrile-butadiene rubber	-30 °C – +120 °C	5	2	3	3	1	1	4	3	450%
EPDM	Ethylene propylene terpolymer	-30 °C – +130 °C	5	3	1	1	5	4	1	2	450%
SI	Silicone rubber	-60 °C – +200 °C	6	4	1	1	5	4	5	5	500%

1 = excellent 2 = very good 3 = good 4 = moderate 5 = low 6 = insufficient

Rubber buffers

steel or stainless steel, type A

Material:
Metal parts steel grade 5.6 or stainless steel.
Elastomer natural rubber, medium hardness, Shore 55A.

Version:
Steel galvanized.
Stainless steel bright.

Sample order:
nlm 26100-00800855

Note:
The rubber buffers are widely-used construction elements for elastic mounting. They are used, among other things, as mountings for aggregates, motors, compressors, pumps and testing machinery.

Temperature range:
-30°C to +80°C.

On request:
Other Shore grades.

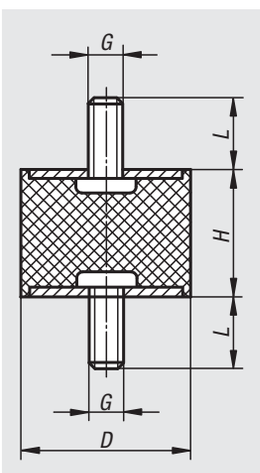

Order No.	Main material	D	G	L	H	Spring stiffness N/mm	Load N
26100-00800855	steel	8	M3	6	8	24	31
26100-01001055	steel	10	M4	10	10	35	32
26100-01001555	steel	10	M4	10	15	50	50
26100-01500855	steel	15	M4	10	8	130	104
26100-01501055	steel	15	M4	10	10	122	122
26100-01501555	steel	15	M4	10	15	59	88
26100-02000855	steel	20	M6	18	8	725	580
26100-02001055	steel	20	M6	18	10	300	300
26100-02001555	steel	20	M6	18	15	200	300
26100-02002055	steel	20	M6	18	20	133	332
26100-02002555	steel	20	M6	18	25	90	270
26100-02501055	steel	25	M6	18	10	800	800
26100-02501555	steel	25	M6	18	15	294	441
26100-02502055	steel	25	M6	18	20	200	500
26100-02502555	steel	25	M6	18	25	94	282
26100-02503055	steel	25	M6	18	30	70	280
26100-03001555	steel	30	M8	23	15	587	880
26100-03002055	steel	30	M8	23	20	318	795
26100-03002555	steel	30	M8	23	25	183	549
26100-03003055	steel	30	M8	23	30	150	600
26100-03004055	steel	30	M8	23	40	77	385
26100-04001555	steel	40	M8	23	15	1250	1875
26100-04002055	steel	40	M8	23	20	565	1412
26100-04003055	steel	40	M8	23	30	300	1200
26100-04004055	steel	40	M8	23	40	189	945
26100-05002055	steel	50	M10	28	20	1300	3250
26100-05002555	steel	50	M10	28	25	667	2000
26100-05003055	steel	50	M10	28	30	500	2000
26100-05004055	steel	50	M10	28	40	300	1500
26100-05005055	steel	50	M10	28	50	193	1153
26100-06004055	steel	60	M10	28	40	377	1885
26100-07004555	steel	70	M10	28	45	410	2255
26100-07502555	steel	75	M12	37	25	1655	4965
26100-07504055	steel	75	M12	37	40	717	3585
26100-07505055	steel	75	M12	37	50	470	2820
26100-07505555	steel	75	M12	37	55	405	2835
26100-015015551	stainless steel	15	M4	12	15	59	88
26100-020015551	stainless steel	20	M6	18	15	200	300
26100-025020551	stainless steel	25	M6	18	20	200	500
26100-030020551	stainless steel	30	M8	23	20	318	795
26100-030025551	stainless steel	30	M8	23	25	183	549
26100-040030551	stainless steel	40	M8	23	30	300	1200

Rubber buffers

type AT tapered

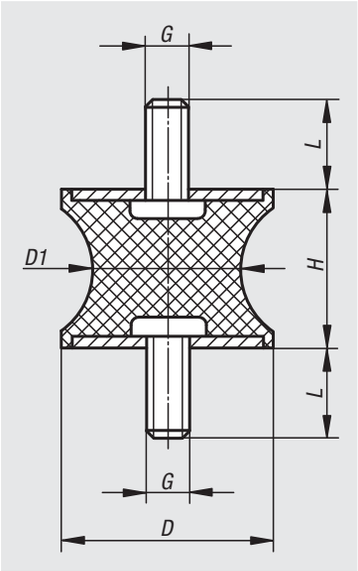

Material:
Metal parts, steel, grade 5.6.
Elastomer natural rubber, medium hardness, Shore 57A.

Version:
Steel galvanized.

Sample order:
nlm 26101-01001057

Note:
These rubber buffers are widely used construction elements for elastic mounting. They are used, among other things, as mountings for aggregates, motors, compressors, pumps and testing machinery.
Rubber buffers with tapered rubber contour reduce high edge loads of the rubber by radial deflection and so increase the components service life.

Temperature range:
-30°C to +80°C.

On request:
Other Shore grades.

Order No.	D	D1	H	G	L	Spring stiffness N/mm	Load N
26101-01001057	10	8	10	M4	13	31	37
26101-01501557	15	12	15	M4	13	71	135
26101-02001557	20	14	15	M6	18	177	283
26101-03002057	30	22	20	M8	23	212	763
26101-04003057	40	33	30	M8	23	202	1111
26101-04004857	40	20	48	M8	23	101	626
26101-05003057	50	40	30	M10	28	351	1229
26101-07504057	75	50	40	M12	37	466	2330

Rubber buffers

steel or stainless steel, type B

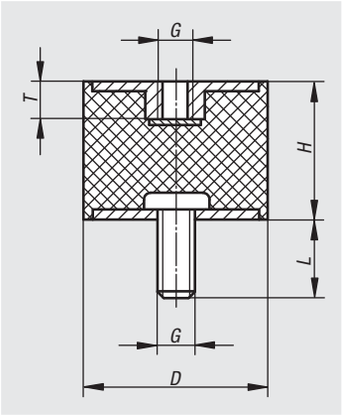

Material:
Metal parts steel grade 5.6 or stainless steel.
Elastomer natural rubber, medium hardness, Shore 55A.

Version:
Steel galvanized.
Stainless steel bright.

Sample order:
nlm 26102-00800855

Note:
The rubber buffers are widely-used construction elements for elastic mounting. They are used, among other things, as mountings for aggregates, motors, compressors, pumps and testing machinery.

Temperature range:
-30°C to +80°C.

On request:
Other Shore grades.

Order No.	Main material	D	H	G	L	T	Spring stiffness N/mm	Load N
26102-00800855	steel	8	8	M3	6	3	35	17
26102-01001055	steel	10	10	M4	10	4	75	75
26102-01001555	steel	10	15	M4	10	4	50	60
26102-01500855	steel	15	10	M4	10	4	130	130
26102-01501555	steel	15	15	M4	10	4	100	120
26102-02001555	steel	20	15	M6	18	6	325	390
26102-02002055	steel	20	20	M6	18	6	130	260
26102-02002555	steel	20	25	M6	18	6	95	210
26102-02501555	steel	25	15	M6	18	6	333	399
26102-02502055	steel	25	20	M6	18	6	195	410
26102-02502555	steel	25	25	M6	18	6	117	257
26102-02503055	steel	25	30	M6	18	6	100	300
26102-03001555	steel	30	15	M8	23	8	590	708
26102-03002055	steel	30	20	M8	23	8	280	560
26102-03002555	steel	30	25	M8	23	8	180	396
26102-03003055	steel	30	30	M8	23	8	168	504
26102-03004055	steel	30	40	M8	23	8	88	308
26102-04002055	steel	40	20	M8	23	8	700	840
26102-04003055	steel	40	30	M8	23	8	273	820
26102-04004055	steel	40	40	M8	23	8	189	660
26102-05002055	steel	50	20	M10	28	10	1471	2500
26102-05002555	steel	50	25	M10	28	10	630	1386
26102-05003055	steel	50	30	M10	28	10	545	1635
26102-05004055	steel	50	40	M10	28	10	310	1116
26102-05005055	steel	50	50	M10	28	10	180	900
26102-06004055	steel	60	40	M10	28	10	500	1750
26102-07004555	steel	70	45	M10	28	10	600	2400
26102-07502555	steel	75	25	M12	37	12	2440	3660
26102-07504055	steel	75	40	M12	37	12	700	2450
26102-07505055	steel	75	50	M12	37	12	520	2600
26102-07505555	steel	75	55	M12	37	12	396	2178
26102-008008551	stainless steel	8	8	M3	8	3	35	17
26102-010010551	stainless steel	10	10	M4	12	4	75	75
26102-015010551	stainless steel	15	10	M4	12	4	-	-
26102-020020551	stainless steel	20	20	M6	18	6	130	260
26102-025020551	stainless steel	25	20	M6	18	6	195	410
26102-030020551	stainless steel	30	20	M8	23	8	280	560
26102-040020551	stainless steel	40	20	M8	23	8	700	840

Rubber buffers

stainless steel, type B

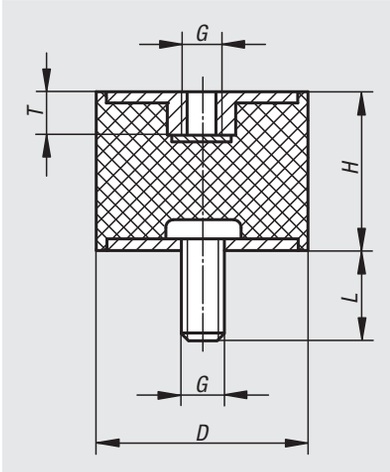

Material:
Metal parts 1.4401 stainless steel.
Elastomer natural rubber, medium hardness Shore 55A, grey.

Version:
Stainless steel bright.

Sample order:
nlm 26102-01-00800855

Note:
The rubber buffers are widely-used construction elements for elastic mounting. They are used, among other things, as mountings for aggregates, motors, compressors, pumps and testing machinery.

Temperature range:
-30°C to +80°C.

On request:
Metal parts 1.4301 stainless steel.

Order No.	D	H	G	L	T	Spring stiffness N/mm	Load N
26102-01-00800855	8	8	M3	6	3	35	17
26102-01-01001055	10	10	M4	10	4	75	75
26102-01-01001555	10	15	M4	10	4	50	60
26102-01-01501055	15	10	M4	10	4	130	130
26102-01-01501555	15	15	M4	10	4	100	120
26102-01-02001555	20	15	M6	18	5	325	390
26102-01-02002055	20	20	M6	18	5	130	260
26102-01-02002555	20	25	M6	18	5	95	210
26102-01-02501555	25	15	M6	18	5	333	399
26102-01-02502055	25	20	M6	18	5	195	410
26102-01-02502555	25	25	M6	18	5	117	257
26102-01-02503055	25	30	M6	18	5	100	300
26102-01-03001555	30	15	M8	23	7	590	708
26102-01-03002055	30	20	M8	23	7	280	560
26102-01-03002555	30	25	M8	23	7	180	396
26102-01-03003055	30	30	M8	23	7	168	504
26102-01-03004055	30	40	M8	23	7	88	308
26102-01-04002055	40	20	M8	23	7	700	840
26102-01-04003055	40	30	M8	23	7	273	820
26102-01-04004055	40	40	M8	23	7	189	660
26102-01-05002055	50	20	M10	28	8	1471	2500
26102-01-05002555	50	25	M10	28	8	630	1386
26102-01-05003055	50	30	M10	28	8	545	1635
26102-01-05004055	50	40	M10	28	8	310	1116
26102-01-05005055	50	50	M10	28	8	180	900
26102-01-06004055	60	40	M10	28	8	500	1750
26102-01-07004555	70	45	M10	28	8	600	2400
26102-01-07502555	75	25	M12	37	10	2440	3660
26102-01-07504055	75	40	M12	37	10	700	2450
26102-01-07505055	75	50	M12	37	10	520	2600
26102-01-07505555	75	55	M12	37	10	396	2178

Rubber buffers

type E

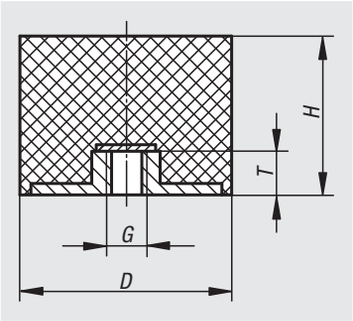

Material:
Metal parts, steel, grade 5.6.
Elastomer natural rubber, medium hardness, Shore 55A.

Version:
Steel galvanized.

Sample order:
nlm 26103-00800855

Note:
The rubber buffers are widely-used construction elements for elastic mounting. They are used, among other things, as mountings for aggregates, motors, compressors, pumps and testing machinery.

Temperature range:
-30°C to +80°C.

On request:
Other Shore grades.

Order No.	D	H	G	T	Spring stiffness N/mm	Load N
26103-00800855	8	8	M3	3	88	44
26103-01501255	15	12	M4	4	165	182
26103-01501555	15	15	M4	4	100	130
26103-01502055	15	20	M4	4	75	113
26103-02001555	20	15	M6	6	145	246
26103-02002055	20	20	M6	6	94	216
26103-02002555	20	25	M6	6	65	169
26103-02501555	25	15	M6	6	270	540
26103-02502555	25	25	M6	6	105	315
26103-02503055	25	30	M6	6	85	281
26103-02504055	25	40	M6	6	75	300
26103-03001555	30	15	M8	8	545	491
26103-03002555	30	25	M8	8	160	416
26103-03003055	30	30	M8	8	125	425
26103-03004055	30	40	M8	8	85	315
26103-04002055	40	20	M8	8	550	660
26103-04002555	40	25	M8	8	500	1000
26103-04003055	40	30	M8	8	300	870
26103-04004055	40	40	M8	8	260	1040
26103-05002055	50	20	M10	10	860	860
26103-05002555	50	25	M10	10	700	1400
26103-05003055	50	30	M10	10	450	1575
26103-05004055	50	40	M10	10	350	1400
26103-05005055	50	50	M10	10	170	850
26103-06003055	60	30	M10	10	700	1400
26103-06004055	60	40	M10	10	400	1600
26103-06005055	60	50	M10	10	240	1200
26103-07004255	70	42	M10	10	520	2600
26103-07004555	70	45	M10	10	680	3060
26103-07502555	75	25	M12	12	1211	1816
26103-07503055	75	30	M12	12	1090	2289
26103-07504055	75	40	M12	12	500	2000
26103-07505055	75	50	M12	12	550	2750

Rubber buffers

stainless steel, type E

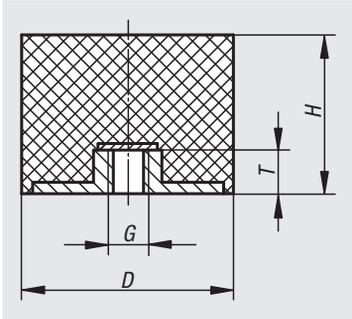

Material:
Metal parts 1.4401 stainless steel.
Elastomer natural rubber, medium hardness Shore 55A, grey.

Version:
Stainless steel bright.

Sample order:
nlm 26103-01-00800855

Note:
The rubber buffers are widely-used construction elements for elastic mounting. They are used, among other things, as mountings for aggregates, motors, compressors, pumps and testing machinery.

Temperature range:
-30°C to +80°C.

On request:
Metal parts 1.4301 stainless steel.

Order No.	D	H	G	T	Spring stiffness N/mm	Load N
26103-01-00800855	8	8	M3	3	88	44
26103-01-01501255	15	12	M4	4	165	182
26103-01-01501555	15	15	M4	4	100	130
26103-01-01502055	15	20	M4	4	75	113
26103-01-02001555	20	15	M6	6	145	246
26103-01-02002055	20	20	M6	6	94	216
26103-01-02002555	20	25	M6	6	65	169
26103-01-02501555	25	15	M8	6	270	540
26103-01-02502555	25	25	M8	6	105	315
26103-01-02503055	25	30	M8	6	85	281
26103-01-02504055	25	40	M8	6	75	300
26103-01-03001555	30	15	M8	8	545	491
26103-01-03002555	30	25	M8	8	160	416
26103-01-03003055	30	30	M8	8	125	425
26103-01-03004055	30	40	M8	8	85	315
26103-01-04002055	40	20	M8	8	550	660
26103-01-04002555	40	25	M8	8	500	1000
26103-01-04003055	40	30	M8	8	300	870
26103-01-04004055	40	40	M8	8	260	1040
26103-01-05002055	50	20	M10	10	860	860
26103-01-05002555	50	25	M10	10	700	1400
26103-01-05003055	50	30	M10	10	450	1575
26103-01-05004055	50	40	M10	10	350	1400
26103-01-05005055	50	50	M10	10	170	850
26103-01-06003055	60	30	M10	10	700	1400
26103-01-06004055	60	40	M10	10	400	1600
26103-01-06005055	60	50	M10	10	240	1200
26103-01-07004255	70	42	M10	10	520	2600
26103-01-07004555	70	45	M10	10	680	3060
26103-01-07502555	75	25	M12	12	1211	1816
26103-01-07503055	75	30	M12	12	1090	2289
26103-01-07504055	75	40	M12	12	500	2000
26103-01-07505055	75	50	M12	12	550	2750

Rubber buffers

steel or stainless steel, type C

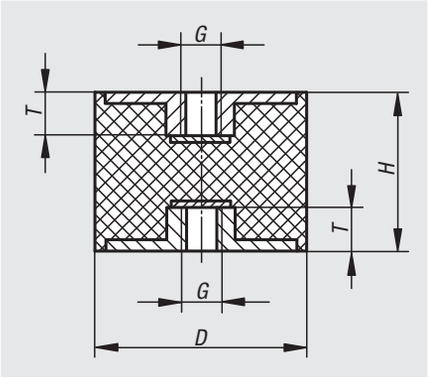

Material:
Metal parts steel grade 5.6 or stainless steel.
Elastomer natural rubber, medium hardness, Shore 55A.

Version:
Steel galvanized.
Stainless steel bright.

Sample order:
nlm 26104-01001055

Note:
The rubber buffers are widely-used construction elements for elastic mounting. They are used, among other things, as mountings for aggregates, motors, compressors, pumps and testing machinery.

Temperature range:
-30°C to +80°C.

On request:
Other Shore grades.

Order No.	Main material	D	H	G	T	Spring stiffness N/mm	Load N
26104-01001055	steel	10	10	M4	4	100	50
26104-01001555	steel	10	15	M4	4	50	50
26104-01501555	steel	15	15	M4	4	100	100
26104-02002055	steel	20	20	M6	6	230	276
26104-02002555	steel	20	25	M6	6	120	180
26104-02502055	steel	25	20	M6	6	230	276
26104-02502555	steel	25	25	M6	6	110	165
26104-02503055	steel	25	30	M6	6	80	160
26104-03002055	steel	30	20	M8	8	425	637
26104-03003055	steel	30	30	M8	8	175	350
26104-03004055	steel	30	40	M8	8	133	400
26104-04003055	steel	40	30	M8	8	530	1060
26104-04004055	steel	40	40	M8	8	222	666
26104-05003055	steel	50	30	M10	10	680	1360
26104-05004055	steel	50	40	M10	10	333	1000
26104-05005055	steel	50	50	M10	10	190	665
26104-07504055	steel	75	40	M12	12	750	2250
26104-07505055	steel	75	50	M12	12	636	2225
26104-010010551	stainless steel	10	10	M4	4	100	50
26104-015015551	stainless steel	15	15	M4	4	100	100
26104-020020551	stainless steel	20	20	M6	6	230	276
26104-025025551	stainless steel	25	25	M6	6	110	165
26104-030020551	stainless steel	30	20	M8	8	425	637
26104-030030551	stainless steel	30	30	M8	8	175	350
26104-040030551	stainless steel	40	30	M8	8	530	1060

Rubber buffers

stainless steel, type C

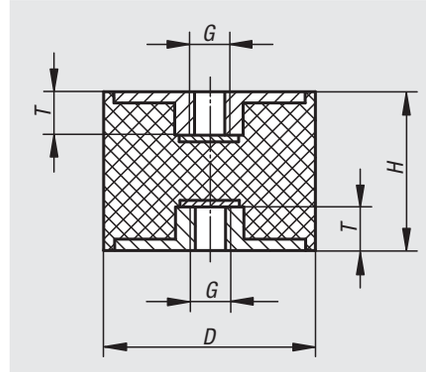

Material:
Metal parts 1.4401 stainless steel.
Elastomer natural rubber, medium hardness Shore 55A, grey.

Version:
Stainless steel bright.

Sample order:
nlm 26104-01-01001055

Note:
The rubber buffers are widely-used construction elements for elastic mounting. They are used, among other things, as mountings for aggregates, motors, compressors, pumps and testing machinery.

Temperature range:
-30°C to +80°C.

On request:
Metal parts 1.4301 stainless steel.

Order No.	D	H	G	T	Spring stiffness N/mm	Load N
26104-01-01001055	10	10	M4	4	175	350
26104-01-01001555	10	15	M4	4	100	100
26104-01-01501555	15	15	M4	4	230	276
26104-01-02002055	20	20	M6	4	120	180
26104-01-02002555	20	25	M6	4	230	276
26104-01-02502055	25	20	M6	4	110	165
26104-01-02502555	25	25	M6	4	80	160
26104-01-02503055	25	30	M6	4	425	637
26104-01-03002055	30	20	M8	4	425	637
26104-01-03003055	30	30	M8	4	133	400
26104-01-03004055	30	40	M8	4	530	1060
26104-01-04003055	40	30	M8	4	222	666
26104-01-04004055	40	40	M8	4	680	1360
26104-01-05003055	50	30	M10	4	333	1000
26104-01-05004055	50	40	M10	4	190	665
26104-01-05005055	50	50	M10	4	750	2250
26104-01-07504055	75	40	M12	4	636	2225
26104-01-07505055	75	50	M12	4	50	50

Rubber buffers

type CT tapered

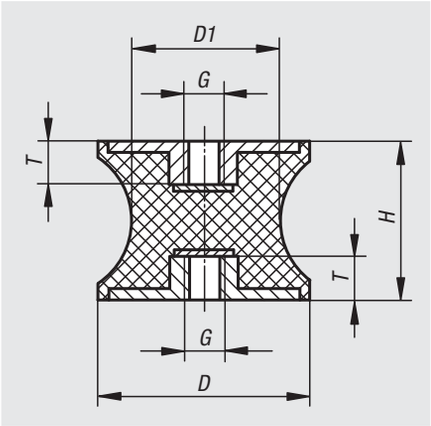

Material:
Metal parts, steel, grade 5.6.
Elastomer natural rubber, medium hardness, Shore 57A.

Version:
Steel galvanized.

Sample order:
nlm 26105-01001057

Note:
These rubber buffers are widely used construction elements for elastic mounting. They are used, among other things, as mountings for aggregates, motors, compressors, pumps and testing machinery.
Rubber buffers with tapered rubber contour reduce high edge loads of the rubber by radial deflection and so increase the components service life.

Temperature range:
-30°C to +80°C.

On request:
Other Shore grades.

Order No.	D	D1	H	G	T	Spring stiffness N/mm	Load N
26105-01501557	15	12	15	M4	4	111	122
26105-02001557	20	14	15	M6	6	227	227
26105-03002057	30	22	20	M8	8	252	504
26105-04003057	40	33	30	M8	8	199	796
26105-04004857	40	20	48	M8	8	111	555
26105-05003057	50	40	30	M10	10	499	998
26105-07504057	75	50	40	M12	12	597	2030

Rubber buffers

steel or stainless steel, type D

Material:
Metal parts steel grade 5.6 or stainless steel.
Elastomer natural rubber, medium hardness, Shore 55A.

Version:
Steel galvanized.
Stainless steel bright.

Sample order:
nlm 26106-00800855

Note:
Rubber buffers are used, among other things for mounting aggregates and as elastic buffers to limit the travel of moving masses or as feet that are not firmly fixed in the floor or where the floor is sensitive i.e. office equipment.

Temperature range:
-30°C to +80°C.

On request:
Other Shore grades.

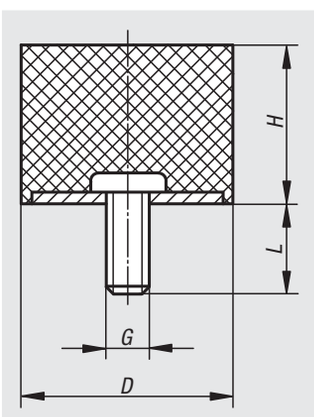

Order No.	Main material	D	H	G	L	Spring stiffness N/mm	Load N
26106-00800855	steel	8	8	M3	6	40	40
26106-01001055	steel	10	10	M4	10	35	35
26106-01001555	steel	10	15	M4	10	26	40
26106-01500655	steel	15	6	M4	10	175	88
26106-01500855	steel	15	8	M4	10	187	187
26106-01501055	steel	15	10	M4	10	100	100
26106-01501555	steel	15	15	M4	10	50	100
26106-02000555	steel	20	5	M6	18	135	95
26106-02000855	steel	20	8	M6	18	250	250
26106-02001055	steel	20	10	M6	18	240	240
26106-02001555	steel	20	15	M6	18	110	220
26106-02002055	steel	20	20	M6	18	75	225
26106-02002555	steel	20	25	M6	18	65	227,5
26106-02500855	steel	25	8	M6	18	850	850
26106-02501055	steel	25	10	M6	18	400	400
26106-02501555	steel	25	15	M6	18	210	420
26106-02502055	steel	25	20	M6	18	140	420
26106-02502555	steel	25	25	M6	18	100	350
26106-02503055	steel	25	30	M6	18	79	316
26106-03001555	steel	30	15	M8	23	270	540
26106-03002055	steel	30	20	M8	23	238	714
26106-03002555	steel	30	25	M8	23	153	535,5
26106-03003055	steel	30	30	M8	23	127	508
26106-03004055	steel	30	40	M8	23	88	528
26106-04001555	steel	40	15	M8	23	710	1420
26106-04002055	steel	40	20	M8	23	365	1095
26106-04003055	steel	40	30	M8	23	205	820
26106-04004055	steel	40	40	M8	23	143	858
26106-05002055	steel	50	20	M10	28	646	1938
26106-05003055	steel	50	30	M10	28	354	1416
26106-05004055	steel	50	40	M10	28	230	1380
26106-05005055	steel	50	50	M10	28	160	1280
26106-06004055	steel	60	40	M10	28	317	1902
26106-07002555	steel	70	25	M10	28	980	3430
26106-07004555	steel	70	45	M10	28	438	3066
26106-07502555	steel	75	25	M12	37	1318	4613
26106-07504055	steel	75	40	M12	37	643	3858
26106-07505055	steel	75	50	M12	37	472	3776
26106-07505555	steel	75	55	M12	37	310	3100
26106-008008551	stainless steel	8	8	M3	8	40	40
26106-010010551	stainless steel	10	10	M4	10	35	35
26106-015015551	stainless steel	15	15	M4	10	50	100
26106-020015551	stainless steel	20	15	M6	18	110	220
26106-025020551	stainless steel	25	20	M6	18	140	420
26106-030030551	stainless steel	30	30	M8	23	127	508
26106-040030551	stainless steel	40	30	M8	23	205	820

Rubber buffers

stainless steel, type D

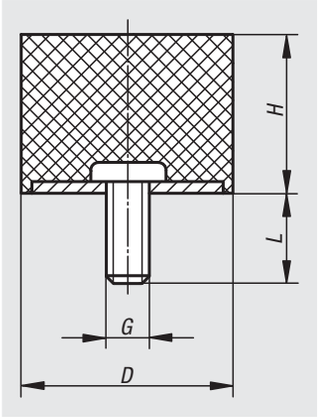

Material:
Metal parts 1.4401 stainless steel.
Elastomer natural rubber, medium hardness Shore 55A, grey.

Version:
Stainless steel bright.

Sample order:
nlm 26106-01-00800855

Note:
Rubber buffers are used, among other things for mounting aggregates and as elastic buffers to limit the travel of moving masses or as feet that are not firmly fixed in the floor or where the floor is sensitive i.e. office equipment.

Temperature range:
-30°C to +80°C.

On request:
Metal parts 1.4301 stainless steel.

Order No.	D	H	G	L	Spring stiffness N/mm	Load N
26106-01-00800855	8	8	M3	6	40	40
26106-01-01001055	10	10	M4	10	35	35
26106-01-01001555	10	15	M4	10	26	40
26106-01-01500855	15	8	M4	10	187	187
26106-01-01501055	15	10	M4	10	100	100
26106-01-02000855	20	8	M6	18	250	250
26106-01-02001055	20	10	M6	18	240	240
26106-01-02001555	20	15	M6	18	110	220
26106-01-02002055	20	20	M6	18	75	225
26106-01-02500855	25	8	M6	18	850	850
26106-01-02501055	25	10	M6	18	400	400
26106-01-02501555	25	15	M6	18	210	420
26106-01-02502055	25	20	M6	18	140	420
26106-01-02502555	25	25	M6	18	100	350
26106-01-03001555	30	15	M8	23	270	540
26106-01-03002055	30	20	M8	23	238	714
26106-01-03003055	30	30	M8	23	127	508
26106-01-03004055	30	40	M8	23	88	528
26106-01-04001555	40	15	M8	23	710	1420
26106-01-04002055	40	20	M8	23	365	1095
26106-01-04003055	40	30	M8	23	205	820
26106-01-05002055	50	20	M10	28	646	1938
26106-01-05003055	50	30	M10	28	354	1416
26106-01-05004055	50	40	M10	28	230	1380

26107

Rubber buffers

type DS suction foot

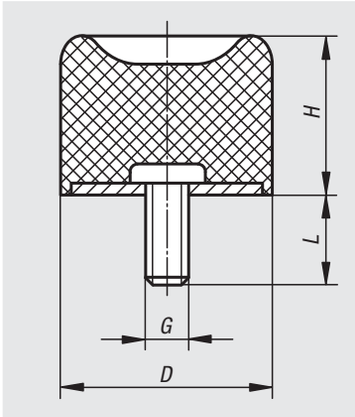

Material:
Metal parts, steel, grade 5.6.
Elastomer natural rubber, medium hardness, Shore 57A.

Version:
Steel galvanized.

Sample order:
nlm 26107-01501457

Note:
Rubber buffers are used, among other things for mounting aggregates and as elastic buffers to limit the travel of moving masses.

Temperature range:
-30°C to +80°C.

On request:
Other Shore grades.

Order No.	D	H	G	L	Spring stiffness N/mm	Load N
26107-01501457	15	14	M4	13	50	100
26107-02501857	25	18,5	M6	18	95	285
26107-03002857	30	28,5	M8	23	97	340
26107-04002857	40	28	M8	23	120	480
26107-05002857	50	28	M10	28	220	990
26107-07003057	70	30	M10	28	360	2160
26107-07503757	75	37	M12	37	390	3510
26107-10005057	100	50	M16	42	540	8100

26108

Rubber impact buffers

type TP door buffer

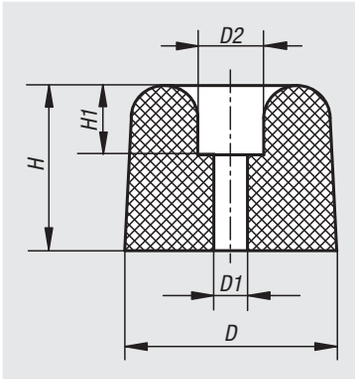

Material:
Elastomer, natural rubber, medium hardness, 60 Shore A

Sample order:
nlm 26108-02601560

Note:
Screw on rubber impact buffers can also be used as equipment or machine feet.

Temperature range:
-30°C to +80°C.

On request:
Other Shore grades.

Order No.	D	D1	D2	H	H1
26108-02601560	26	4	12	15	9
26108-03002260	30	7	11	21	5
26108-03503060	35	8	17	30	10
26108-04003560	40	7	20	35	8

Rubber buffers

parabolic

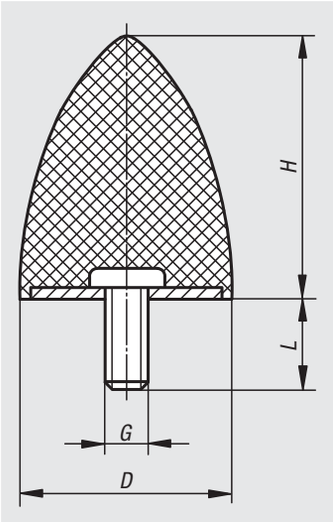

Material:
Metal parts, steel, grade 5.6.
Elastomer natural rubber, medium hardness, Shore 55A.

Version:
Steel galvanized.

Sample order:
nlm 26110-02002455

Note:
Rubber buffers are robust and effective elastic cushioning elements and shock absorbers. These buffers are ideal for elastic travel limitation and cushioning knocks by mobile and immobile aggregates and machines and as use as door stops.

Temperature range:
-30°C to +80°C.

On request:
Other Shore grades.

Order No.	D	H	G	L	Spring stiffness N/mm	Load N
26110-02002455	20	24	M6	18	14	500
26110-03003655	30	36	M8	20	15	750
26110-03504055	35	40	M8	23	-	-
26110-05005855	50	58	M10	28	30	3000
26110-05006755	50	67	M8	38	30	3200
26110-07508955	75	89	M12	37	50	8000

26112

Rubber buffers

conical

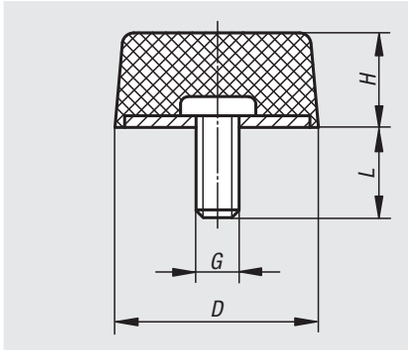

Material:
Metal parts, steel, grade 5.6.
Elastomer natural rubber, medium hardness, Shore 55A.

Version:
Steel galvanized.

Sample order:
nlm 26112-02501755

Note:
Rubber buffers are robust and effective elastic cushioning elements and shock absorbers. These buffers are ideal for elastic travel limitation and cushioning knocks by mobile and immobile aggregates and machines and as use as door stops.

Temperature range:
-30°C to +80°C.

On request:
Other Shore grades.

Order No.	D	H	G	L	Spring stiffness N/mm	Load N
26112-02501755	25	17	M6	18	3,7	678
26112-05001855	50	18	M10	28	4	3600

26115

Rubber buffers

spherical

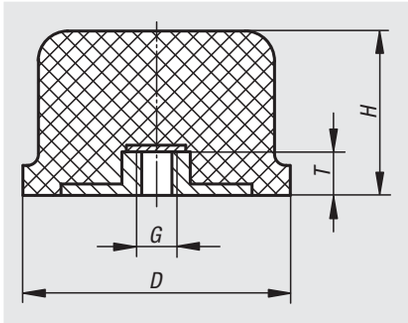

Material:
Metal parts, steel, grade 5.6.
Elastomer natural rubber, medium hardness, Shore 55A.

Version:
Steel galvanized.

Sample order:
nlm 26115-05003555

Note:
Rubber buffers are robust and effective elastic cushioning elements and shock absorbers. These buffers are ideal for elastic travel limitation and cushioning knocks by mobile and immobile aggregates and machines and as use as door stops.

Temperature range:
-30°C to +80°C.

On request:
Other Shore grades.

Order No.	D	H	G	T	Spring stiffness N/mm	Load N
26115-05003555	50	35	M10	10	120	3000
26115-08006055	80	60	M12	12	150	11000
26115-12509055	125	93	M16	16	200	20000

Rubber-metal impact buffer rails

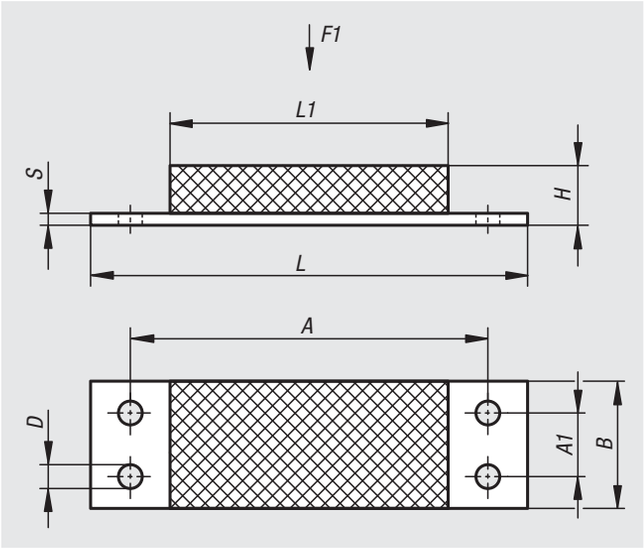

Material:
Steel.
Elastomer, natural rubber, medium hardness, 57 Shore A.

Version:
Steel, painted black.

Sample order:
nlm 26120-02501904557

Note:
For absorbing large impact forces and supporting heavy weights.

The indicated load data apply for static long-term load with a rubber hardness of 57 Shore A.

* Metal part 30 mm wide.

Temperature range:
-30°C to +80°C.

Order No.	A	A1	B	D	H	L	L1	S	F1 N
26120-02501904557	68,6	-	25*	6,5	19	84	45	3	500
26120-05003507057	100	-	50	8,5	35	130	70	5	3100
26120-05007007057	100	-	50	8,5	70	130	70	5	2500
26120-10004512057	160	50	100	13	45	200	120	10	14000
26120-10008012057	160	50	100	13	80	200	120	10	8500
26120-12004515057	200	60	120	15	45	250	150	10	18000
26120-15005020057	250	80	150	17	50	300	200	15	34000

O-shaped mounts

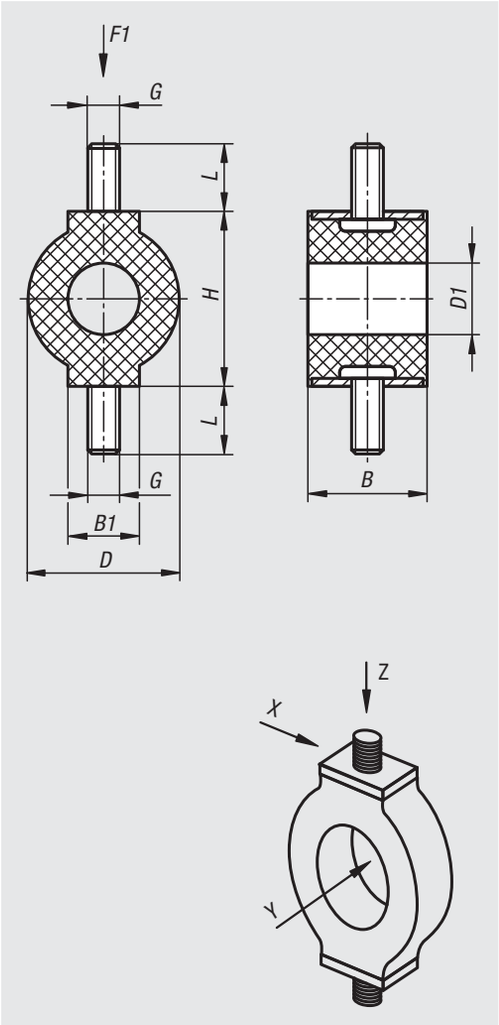

Material:
Metal parts, steel, grade 5.6.
Elastomer natural rubber, medium hardness, Shore 57A.

Version:
Steel galvanized.

Sample order:
nlm 26130-01201257

Note:
O-shapes mounts have a very soft spring characteristic, which is why they are also called low-frequency supports. They serve for low-vibration support of instruments, and electrical components, as well as for mounting light assemblies and precision mechanical equipment.

The spring characteristic of the O-shaped mounts increases in the order X, Y and Z. The main load direction is the longitudinal axis of the threaded bolts (Z direction).

Temperature range:
-30°C to +80°C.

Order No.	B	B1	D	D1	G	H	L	F1 N
26130-01201257	9,5	9,5	10	6	M4	12,5	10	8
26130-01401757	13	6	14	6	M4	17	10	18
26130-02503057	20	12	25	12	M5	30	10	55

Profile dampers

axial damping

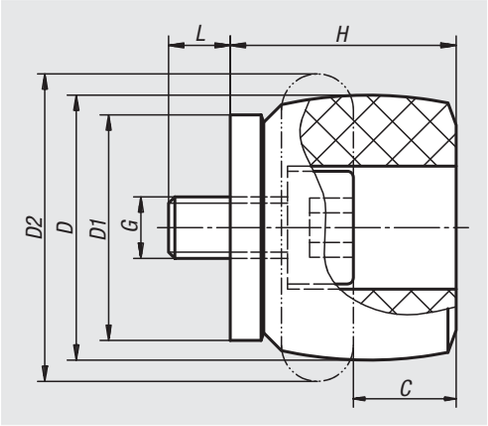

Material:
Co-polyester elastomer.

Version:
Material hardness Shore 55D.

Sample order:
nlm 26180-01205

Note:
Suitable for emergency stop and continual use.
Energy reduction: 58% to 73%.
Dynamic force absorption: 870 N to 35190 N
Impact velocity: max. 5 m/s.

The profile dampers are maintenance-free and are supplied ready to install with a special fastening screw.

Environment: Resistant to microbes, sea water, chemicals and with very good UV and ozone resistance. No water absorption or maceration.

Application:
Linear slides and linear guides, pneumatic cylinders, handling equipment, machines and plants

Temperature range:
-40°C to +90°C.

Assembly:
Mounting position: any.
Secure fastening screws with Loctite thread lock.

Order No.	C (travel)	D	D1	D2	G	H	L	max. energy absorption Nm per stroke by permanent load	max. energy absorption Nm per stroke by emergency stop	Tightening torque of screws Nm
26180-01205	5	12	11	15	-	11	3	2	3	1
26180-01707	7	17	15	22	M4	16	4	6	9	1,7
26180-02109	9	21	18	26	M5	18	5	10	16	2,3
26180-02210	10	22	19	27	M6	19	6	11,5	21	6
26180-02812	12	28	25	36	M6	26	6	29	46	6
26180-03414	14	34	30	43	M6	30	6	48	87	6
26180-03716	16	37	33	48	M6	33	6	65	112	6
26180-04016	16	40	34	50	M8	35	8	82	130	20
26180-04318	18	43	38	55	M8	38	8	112	165	20
26180-04720	20	47	41	60	M12	41	12	140	173	50
26180-05022	22	50	44	64	M12	45	12	170	223	50
26180-05422	22	54	47	68	M12	47	12	201	334	50
26180-05724	24	57	50	73	M12	51	12	242	302	50
26180-06225	25	62	53	78	M12	54	12	304	361	50
26180-06527	27	65	57	82	M12	58	12	374	468	50
26180-07029	29	70	60	86	M12	61	12	421	524	50
26180-07231	31	72	63	91	M16	65	16	482	559	120
26180-08032	32	80	69	100	M16	69	16	570	831	120

Profile damper

axial damping, soft version

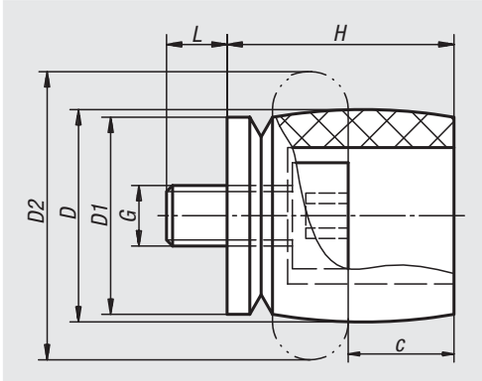

Material:
Co-polyester elastomer.

Version:
Material hardness Shore 40D.

Sample order:
nlm 26182-01407

Note:
Suitable for emergency stop and continual use.
Energy reduction: 35% to 64%.
Dynamic force absorption: 533 N to 10110 N
Impact velocity: max. 5 m/s.

The profile dampers are maintenance-free and are supplied ready to install with a special fastening screw.

Environment: Resistant to microbes, sea water, chemicals and with very good UV and ozone resistance. No water absorption or maceration.

Application:
Linear slides and linear guides, pneumatic cylinders, handling equipment, machines and plants

Temperature range:
-40°C to +90°C.

Assembly:
Mounting position: any.
Secure fastening screws with Loctite thread lock.

Order No.	C (travel)	D	D1	D2	G	H	L	max. energy absorption Nm per stroke by permanent load	max. energy absorption Nm per stroke by emergency stop	Tightening torque of screws Nm
26182-01407	7	14	13	19	M4	15	4	2	3	1,7
26182-01809	9	18	16	24	M5	18	5	4	6	2,3
26182-02010	10	20	19	27	M6	21	6	6	7	6
26182-02615	15	26	25	37	M6	28	6	11,5	15	6
26182-03216	16	32	30	44	M6	32	6	23	26	6
26182-03519	19	35	33	48	M6	36	6	30	36	6
26182-04019	19	40	34	51	M6	38	6	34	42	6
26182-04121	21	41	38	55	M12	41	12	48	63	50
26182-04423	23	44	40	60	M12	45	12	63	72	50
26182-04825	25	48	44	64	M12	49	12	81	91	50
26182-05127	27	51	47	69	M12	52	12	92	114	50
26182-05429	29	54	50	73	M12	55	12	122	158	50
26182-05830	30	58	53	78	M12	59	12	149	154	50
26182-06132	32	61	56	83	M16	62	16	163	169	120
26182-06434	34	64	60	87	M16	66	16	208	254	120

Profile damper

radial damping

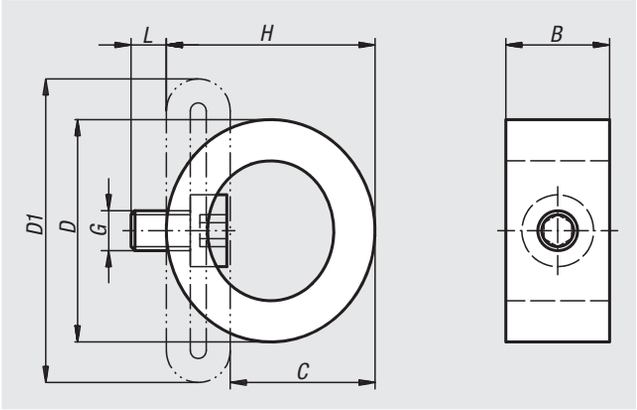

Material:
Co-polyester elastomer.

Version:
Material hardness Shore 40D.

Sample order:
nlm 26184-02917

Note:
Suitable for emergency stop and continual use.
Energy reduction: 25% to 45%.
Dynamic force absorption: 218 N to 3730 N
Impact velocity: max. 5 m/s.

The profile dampers are maintenance-free and are supplied ready to install with a special fastening screw.

Environment: Resistant to microbes, sea water, chemicals and with very good UV and ozone resistance. No water absorption or maceration.

Application:
Linear slides and linear guides, pneumatic cylinders, furniture industry, machines and plants.

Temperature range:
-40°C to +90°C.

Assembly:
Mounting position: any.
Secure fastening screws with Loctite thread lock.

Order No.	B	C (travel)	D	D1	G	H	L	max. energy absorption Nm per stroke by permanent load	max. energy absorption Nm per stroke by emergency stop	Tightening torque of screws Nm
26184-02917	13	17	29	38	M5	25	5	1,2	1,8	3
26184-03722	19	22	37	50	M5	32	5	2,3	5,4	3
26184-04325	20	25	43	58	M5	37	5	3,5	8,1	3
26184-05035	34	35	50	68	M5	44	5	5,8	8,3	3
26184-06343	43	43	63	87	M5	55	5	12	17	3
26184-06740	46	40	67	88	M5	59	5	23	33	3
26184-07646	46	46	76	102	M6	67	6	34,5	43	6
26184-08350	51	50	83	109	M6	73	6	45	74	6
26184-08550	68	50	85	111	M8	73	8	68	92	20

Profile damper

radial damping, hard version

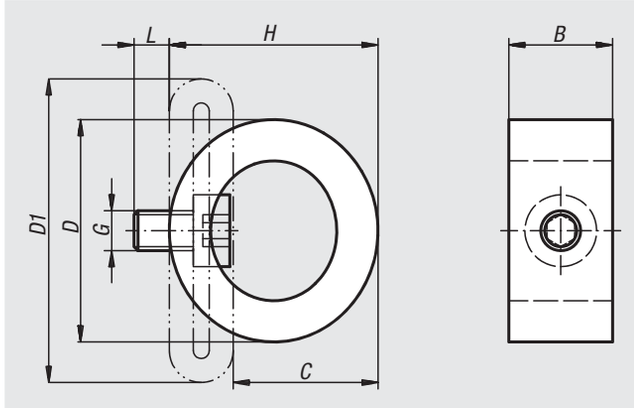

Material:
Co-polyester elastomer.

Version:
Material hardness Shore 55D.

Sample order:
nlm 26186-03015

Note:
Suitable for emergency stop and continual use.
Energy reduction: 39% to 62%.
Dynamic force absorption: 550 N to 7440 N
Impact velocity: max. 5 m/s.

The profile dampers are maintenance-free and are supplied ready to install with a special fastening screw.

Environment: Resistant to microbes, sea water, chemicals and with very good UV and ozone resistance. No water absorption or maceration.

Application:
Linear slides and linear guides, pneumatic cylinders, furniture industry, machines and plants.

Temperature range:
-40°C to +90°C.

Assembly:
Mounting position: any.
Secure fastening screws with Loctite thread lock.

Order No.	B	C (travel)	D	D1	G	H	L	max. energy absorption Nm per stroke by permanent load	max. energy absorption Nm per stroke by emergency stop	Tightening torque of screws Nm
26186-03015	13	15	30	38	M5	23	5	2,7	5,7	3
26186-03919	19	19	39	50	M5	30	5	6	18	3
26186-04523	20	23	45	58	M5	36	5	8,7	24	3
26186-05232	34	32	52	68	M5	42	5	11,7	20	3
26186-06441	43	41	64	87	M5	53	5	25	46	3
26186-06837	46	37	68	88	M5	56	5	66,5	98	3
26186-07942	46	42	79	102	M6	64	6	81,5	106	6
26186-08645	51	45	86	109	M6	69	6	124	206	6

Notes

Technical information for gas springs

Assembly position:
Gas pressure springs in the sizes 04/12 and 06/15 should if possible always be assembled with the piston rod extending downward. In this way, optimal lubrication of the guide and the sealing system is ensured. For gas springs sized 08/19 and up the assembly position is discretionary. Keep in mind, however, that end-of-travel damping is effective only when the piston rod extends downward. In order to prevent increased loss of gas, gas springs cannot be subject to bending loads, tensile loads or lateral forces. Whenever possible, we recommend the use of ball head connections.

The fitting and removal of gas springs may only be carried out in the no-load state.

Gas springs may be used as an end stop if the nominal force +30% is not exceeded in the process.

Gas springs must not be subjected to tensile stress.

Maintenance:
The gas springs are maintenance-free.
Lubrication or service is not required.

Temperature range:
-20 °C up to +80 °C.

Influence of temperature:
Nominal force is measured at 20 °C.
Subject to physical conditions, the gas springs' force changes every 10 °C by 3.4 %.

Transport and storage:
Gas pressure springs in the sizes 04/12 and 06/15 should be stored with the piston rod extending downward at an ambient temperature of approx. 20 °C. As of size 08/19, storage in any orientation is possible. Actuate the gas springs after 6 months' storage at the latest. Storage of gas springs for a period of over 1 year should be avoided.

Valve:
The gas springs have a check valve inside the the pressure tube thread for subsequent increase and decrease of the nitrogen pressure.

Disposal
If gas springs are no longer needed, they must be disposed of in an environmentally responsible way. For this purpose, a hole is drilled at a suitable spot in order to release the compressed nitrogen gas and drain the oil contained in them. Our opening and disposal instructions are available at our website under the menu item Download.

Design and function principle of gas springs

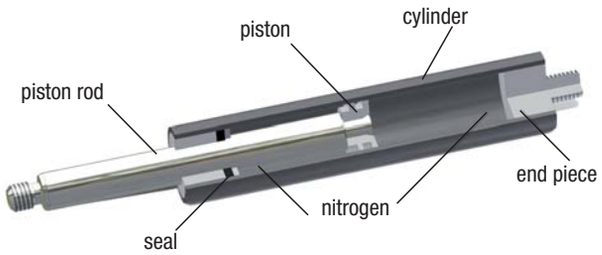

Gas springs are hydropneumatic, self-contained and maintenance-free adjustment elements. Spring force F1 results from the internal pressure (maximum 160 bar on no-load) in the cylinder, which is produced by the nitrogen fill medium. This pressure on the gas spring acts on the cross-sectional area of the piston rod. The piston rod is always extended in the no-load state.

In the course of pushing the piston rod in, the volume in the cylinder is reduced and the gas is compressed.. By doing this, an increase in the force (progression) of the gas springs results subject to the diameter of the piston rod and the cylinder volume. Norelem gas springs contain an oil filling for lubrication and end-of-travel damping.

Gas spring characteristic in the force/distance diagram

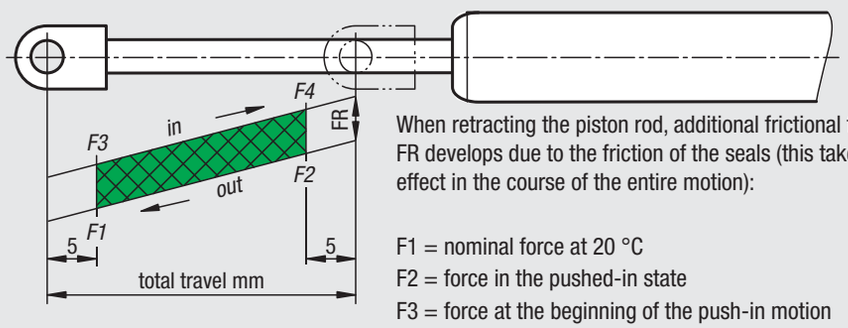

When retracting the piston rod, additional frictional force FR develops due to the friction of the seals (this takes effect in the course of the entire motion):

F1 = nominal force at 20 °C
F2 = force in the pushed-in state
F3 = force at the beginning of the push-in motion
F4 = force at the end of the push-in motion

The approximation formula and application sketch shown below assist in providing a rough estimate and in selecting the appropriate gas spring from the standard programme.

Calculating push-out force F1

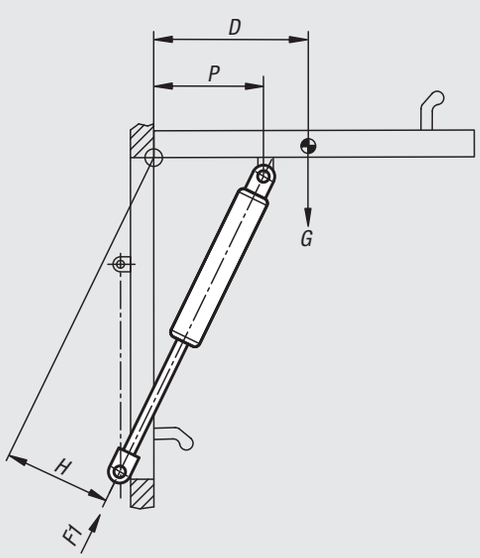

Approximation formula for calculating the thrust F1 [N] at 20 °C

$$F1 = \frac{G \cdot D}{H \cdot n} \times 13 \text{ [N]}$$

G = hatch weight in kg
H = effective lever arm of gas spring in mm, hatch open
13 = conversion factor kg → N + safety margin
P = hatch fastening ca. 2/3 D
n = No. of gas springs (standard: n = 2)
D = effective centre of gravity in mm, hatch open

Example:

G = 25 kg, D = 300 mm, H = 150 mm, n = 2

$$F1 = \frac{25 \cdot 300}{150 \cdot 2} \times 13 = 325 \text{ N}$$

Gas springs

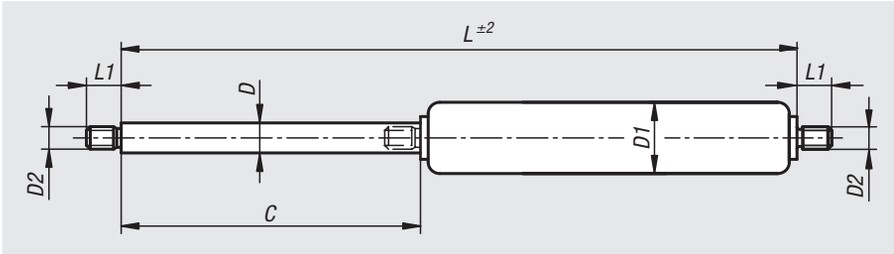

Material:
Piston rod and pressure tube steel.
Fill medium: oil, nitrogen.

Version:
Piston rod, hard chromed.
Piston rod Ø4 is stainless steel.
Pressure tube painted black.

Sample order:
nlm 26200-0412030X20
(include extension force F1)

Note:
Gas springs are maintenance-free, self-contained systems that are filled with nitrogen under high pressure. For end-of-travel damping and lubrication, a defined amount of oil is also contained inside. The gas springs contain a nonreturn valve in a threaded pin on the pressurised pipe, which allows the pushing force to be lowered at a later time.

Gas pressure springs in the sizes 04/12 and 06/15 must be stored and installed with the piston rod extending downwards. As of size 08/19, storage and installation in any orientation is possible. Keep in mind, however, that end-of-travel damping is effective only when the piston rod extends downwards. As a consequence of the physical properties when filling a gas spring, a tolerance range of ±5% results for the rated pushing force.

Gas springs are filled with nitrogen under high pressure and under no circumstances should they be opened or overloaded.

On request:
Other extension forces.

Accessories:
See adjacent illustration for connectors and hardware.

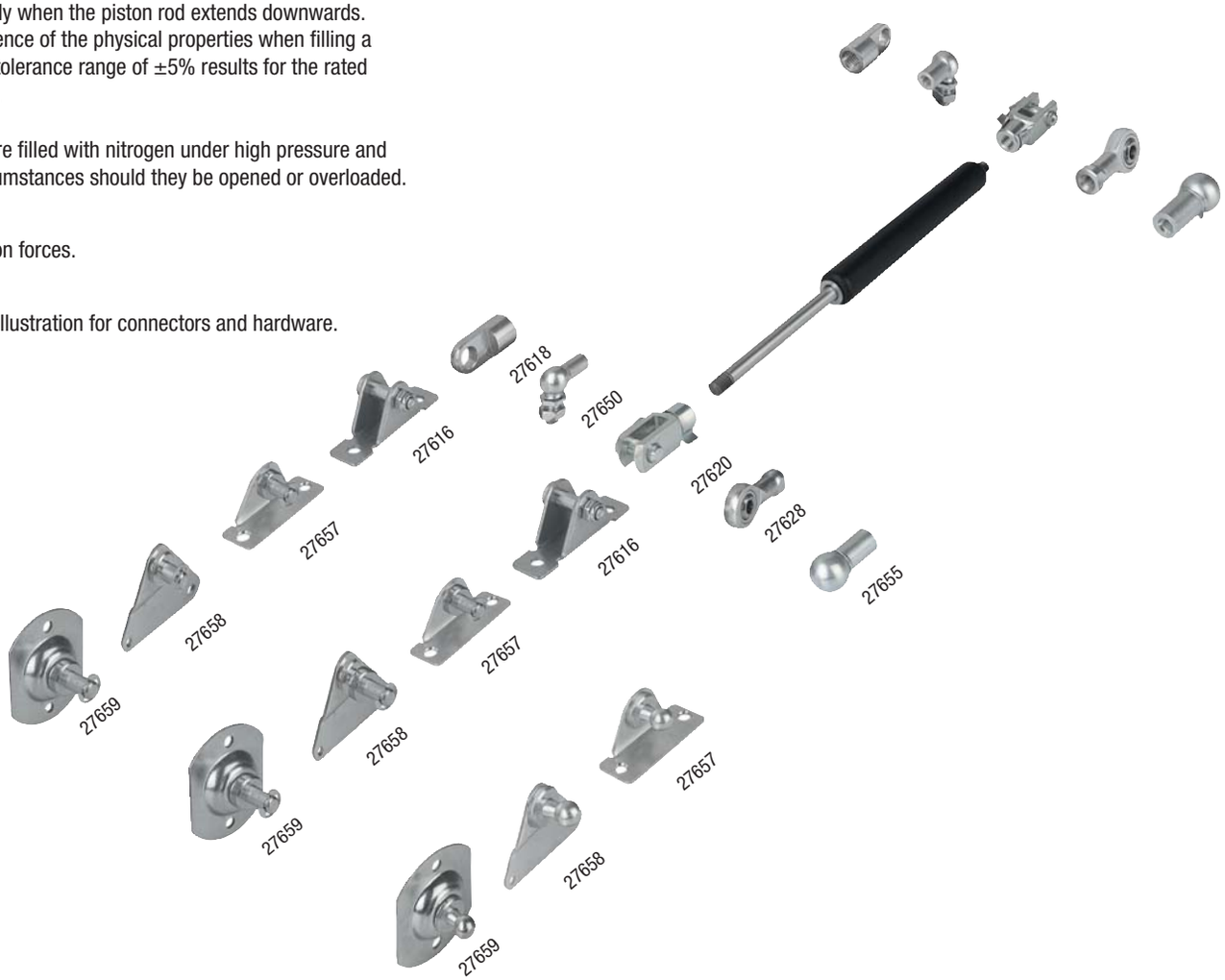

Gas springs

Order No.	Size	D	D1	D2	C (travel)	L	L1	Progression %	Extension force F1 N
26200-0412030X	04/12	4	12	M3,5	30	92	5	20	20/40/70/100/130/150/180
26200-0412040X	04/12	4	12	M3,5	40	112	5	20	20/40/70/100/130/150/180
26200-0412050X	04/12	4	12	M3,5	50	132	5	20	20/40/70/100/130/150/180
26200-0412060X	04/12	4	12	M3,5	60	152	5	20	20/40/70/100/130/150/180
26200-0412070X	04/12	4	12	M3,5	70	172	5	20	20/40/70/100/130/150/180
26200-0412080X	04/12	4	12	M3,5	80	192	5	20	20/40/70/100/130/150/180
26200-0412100X	04/12	4	12	M3,5	100	232	5	20	20/40/70/100/130/150/180
26200-0615020X	06/15	6	15,6	M5	20	95	5	22	100/150/200/250/300/350/400
26200-0615040X	06/15	6	15,6	M5	40	135	5	22	100/150/200/250/300/350/400
26200-0615060X	06/15	6	15,6	M5	60	175	5	22	100/150/200/250/300/350/400
26200-0615080X	06/15	6	15,6	M5	80	215	5	22	100/150/200/250/300/350/400
26200-0615100X	06/15	6	15,6	M5	100	255	5	22	100/150/200/250/300/350/400
26200-0615120X	06/15	6	15,6	M5	120	295	5	22	100/150/200/250/300/350/400
26200-0615150X	06/15	6	15,6	M5	150	355	5	22	100/150/200/250/300/350/400
26200-0819060X	08/19	8	19	M8	60	190	10	30	100/150/200/250/300/350/400/500/600/700
26200-0819080X	08/19	8	19	M8	80	230	10	30	100/150/200/250/300/350/400/500/600/700
26200-0819100X	08/19	8	19	M8	100	270	10	30	100/150/200/250/300/350/400/500/600/700
26200-0819120X	08/19	8	19	M8	120	310	10	30	100/150/200/250/300/350/400/500/600/700
26200-0819140X	08/19	8	19	M8	140	350	10	30	100/150/200/250/300/350/400/500/600/700
26200-0819160X	08/19	8	19	M8	160	390	10	30	100/150/200/250/300/350/400/500/600/700
26200-0819180X	08/19	8	19	M8	180	430	10	30	100/150/200/250/300/350/400/500/600/700
26200-0819200X	08/19	8	19	M8	200	470	10	30	100/150/200/250/300/350/400/500/600/700
26200-0819220X	08/19	8	19	M8	220	510	10	30	100/150/200/250/300/350/400/500/600/700
26200-0819250X	08/19	8	19	M8	250	570	10	30	100/150/200/250/300/350/400/500/600/700
26200-1023050X	10/23	10	23	M8	50	170	10	30	150/200/250/300/350/400/500/600/700/800
26200-1023100X	10/23	10	23	M8	100	270	10	30	150/200/250/300/350/400/500/600/700/800
26200-1023150X	10/23	10	23	M8	150	370	10	30	150/200/250/300/350/400/500/600/700/800
26200-1023200X	10/23	10	23	M8	200	470	10	30	150/200/250/300/350/400/500/600/700/800
26200-1023250X	10/23	10	23	M8	250	570	10	30	150/200/250/300/350/400/500/600/700/800
26200-1023300X	10/23	10	23	M8	300	670	10	30	150/200/250/300/350/400/500/600/700/800
26200-1023350X	10/23	10	23	M8	350	770	10	30	150/200/250/300/350/400/500/600/700/800
26200-1428050X	14/28	14	28	M10	50	207	12	40	200/250/300/350/400/500/600/700/800
26200-1428100X	14/28	14	28	M10	100	307	12	40	200/250/300/350/400/500/600/700/800
26200-1428150X	14/28	14	28	M10	150	407	12	40	200/250/300/350/400/500/600/700/800
26200-1428200X	14/28	14	28	M10	200	507	12	40	200/250/300/350/400/500/600/700/800
26200-1428250X	14/28	14	28	M10	250	607	12	40	200/250/300/350/400/500/600/700/800
26200-1428300X	14/28	14	28	M10	300	707	12	40	200/250/300/350/400/500/600/700/800
26200-1428400X	14/28	14	28	M10	400	907	12	40	200/250/300/350/400/500/600/700/800

Gas springs, stainless steel

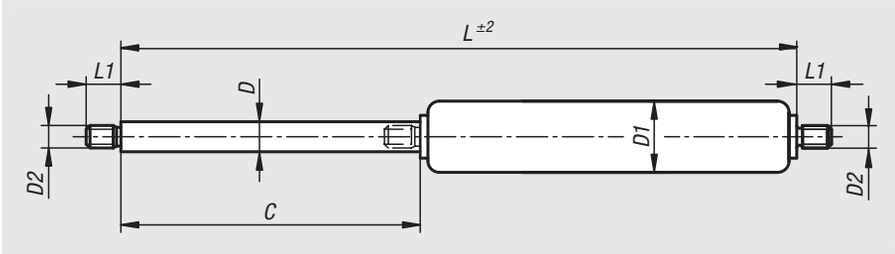

Material:
Piston rod, stainless steel 1.4305.
Pressure pipe, stainless steel 1.4301.
Filling medium: oil, nitrogen.

Version:
Piston rod and pressure pipe, bright.

Sample order:
nlm 26201-0615040X100
(include extension force F1)

Note:
Gas springs are maintenance-free, self-contained systems that are filled with nitrogen under high pressure. There is also an internal defined quantity of oil for end position damping and lubrication purposes. The gas springs contain a check valve in the grub screw of the pressure pipe which enables the extension force to be subsequently reduced.

The gas springs must be stored and mounted with the piston rod extending downwards.

The physical properties that apply when a gas spring is being filled result in a tolerance range of ±5% for the rated extension force.

Gas springs are filled with nitrogen under high pressure and under no circumstances should they be opened or overloaded.

On request:
Other extension forces.

Potential extension force F1 (min.–max.)
Size 06/15: 40–400 N
Size 08/19: 50–700 N
Size 10/23: 100–1200 N
Size 14/28: 200–2500 N

Accessories:
See adjacent illustration for connectors and hardware.

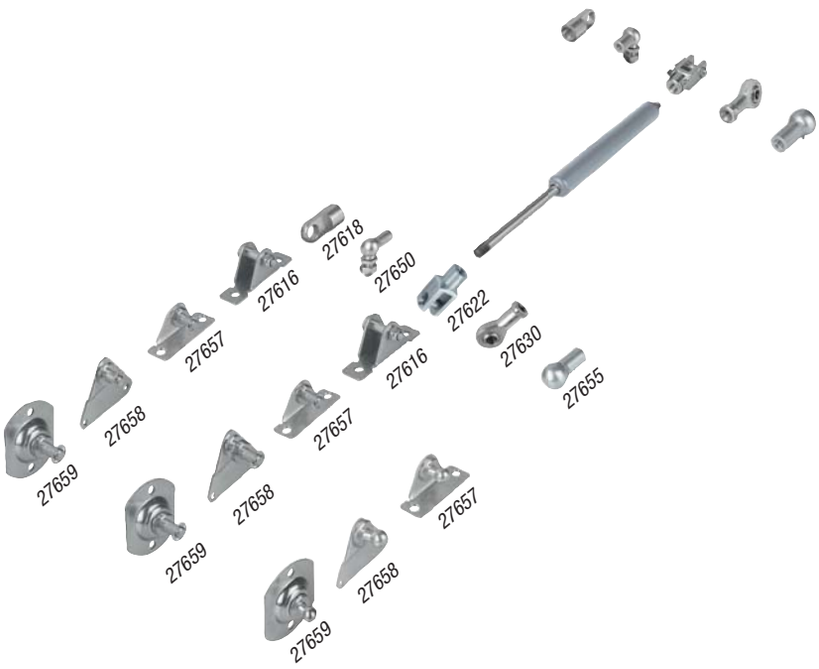

Gas springs, stainless steel

Order No.	Size	D	D1	D2	C (travel)	L	L1	Progression %	Extension force F1 N
26201-0615040X	06/15	6	15	M5	40	135	7	25	100/150/200/250/300/350/400
26201-0615050X	06/15	6	15	M5	50	155	7	25	100/150/200/250/300/350/400
26201-0615060X	06/15	6	15	M5	60	175	7	25	100/150/200/250/300/350/400
26201-0615080X	06/15	6	15	M5	80	215	7	25	100/150/200/250/300/350/400
26201-0615100X	06/15	6	15	M5	100	255	7	25	100/150/200/250/300/350/400
26201-0615120X	06/15	6	15	M5	120	295	7	25	100/150/200/250/300/350/400
26201-0615150X	06/15	6	15	M5	150	355	7	25	100/150/200/250/300/350/400
26201-0819060X	08/19	8	19	M8	60	190	10	30	100/150/200/250/300/350/400/500/600/700
26201-0819080X	08/19	8	19	M8	80	230	10	30	100/150/200/250/300/350/400/500/600/700
26201-0819100X	08/19	8	19	M8	100	270	10	30	100/150/200/250/300/350/400/500/600/700
26201-0819120X	08/19	8	19	M8	120	310	10	30	100/150/200/250/300/350/400/500/600/700
26201-0819150X	08/19	8	19	M8	150	370	10	30	100/150/200/250/300/350/400/500/600/700
26201-0819160X	08/19	8	19	M8	160	390	10	30	100/150/200/250/300/350/400/500/600/700
26201-0819180X	08/19	8	19	M8	180	430	10	30	100/150/200/250/300/350/400/500/600/700
26201-0819200X	08/19	8	19	M8	200	470	10	30	100/150/200/250/300/350/400/500/600/700
26201-0819220X	08/19	8	19	M8	220	510	10	30	100/150/200/250/300/350/400/500/600/700
26201-0819250X	08/19	8	19	M8	250	570	10	30	100/150/200/250/300/350/400/500/600/700
26201-1023050X	10/23	10	23	M8	50	170	10	30	150/200/250/300/350/400/500/600/700/800
26201-1023060X	10/23	10	23	M8	60	190	10	30	150/200/250/300/350/400/500/600/700/800
26201-1023080X	10/23	10	23	M8	80	230	10	30	150/200/250/300/350/400/500/600/700/800
26201-1023100X	10/23	10	23	M8	100	270	10	30	150/200/250/300/350/400/500/600/700/800
26201-1023150X	10/23	10	23	M8	150	370	10	30	150/200/250/300/350/400/500/600/700/800
26201-1023200X	10/23	10	23	M8	200	470	10	30	150/200/250/300/350/400/500/600/700/800
26201-1023250X	10/23	10	23	M8	250	570	10	30	150/200/250/300/350/400/500/600/700/800
26201-1023300X	10/23	10	23	M8	300	670	10	30	150/200/250/300/350/400/500/600/700/800
26201-1023350X	10/23	10	23	M8	350	770	10	30	150/200/250/300/350/400/500/600/700/800
26201-1428050X	14/28	14	28	M10	50	207	12	40	200/250/300/350/400/500/600/700/800
26201-1428100X	14/28	14	28	M10	100	307	12	40	200/250/300/350/400/500/600/700/800
26201-1428150X	14/28	14	28	M10	150	407	12	40	200/250/300/350/400/500/600/700/800
26201-1428200X	14/28	14	28	M10	200	507	12	40	200/250/300/350/400/500/600/700/800
26201-1428250X	14/28	14	28	M10	250	607	12	40	200/250/300/350/400/500/600/700/800
26201-1428300X	14/28	14	28	M10	300	707	12	40	200/250/300/350/400/500/600/700/800
26201-1428350X	14/28	14	28	M10	350	807	12	40	200/250/300/350/400/500/600/700/800
26201-1428400X	14/28	14	28	M10	400	907	12	40	200/250/300/350/400/500/600/700/800

Industrial shock absorbers

adjustable

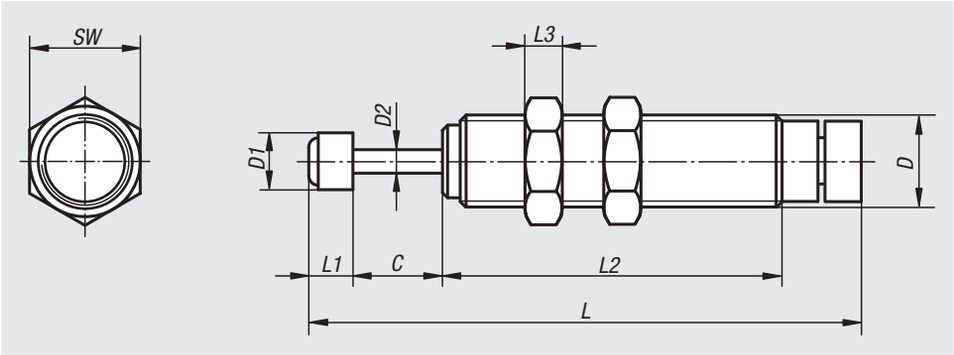

Material:
Housing, steel.
M8x0.75 housing in stainless steel.
Steel piston rod.
Steel nut.
Collision head in steel, plastic.

Version:
Housing nickel plated.
Housing M8x0.75, bright.
Housing M8x1 black oxidised.
Piston rod hard chromed.
Nut nickel plated.

Sample order:
nlm 26300-0807506

Note:
Industrial shock absorbers are maintenance-free, ready to install hydraulic components. They have an integrated fixed stop. The damping strength can be precisely set with the adjustable version. After installation, the equipment is run a few times and the adjustment screw rotated until the optimal braking is achieved.
Exceeding the max. energy input per hour is possible if a pause is made every now and then or the shock absorber is air cooled. The end position is optional.

Temperature range:
-5 °C to +70 °C.

Order No.	D	D1	D2	C (travel)	L	L1	L2	L3	SW
26300-0807506	M8x0,75	6	2,5	6	58	5	41	2	11
26300-0810008	M8x1	6,4	2,5	8	61,1	5,1	43,9	3	10
26300-1010008	M10x1	6	2,4	8	65	6	41	3	13
26300-1210010	M12x1	8	3,5	10	84	8	61	4	14
26300-1415010	M14x1,5	10	3,5	10	88	8	59	6	17
26300-2015016	M20x1,5	18	6	16	127	17	76	8	24
26300-2515030	M25x1,5	22	8	30	173	18	111	10	32

Order No.	max. energy input per stroke Nm	max. energy input per hour Nm	effective mass max. kg	speed range m/s	return force N	axis deviation max. (°)
26300-0807506	1,4	2202	15	0,3 - 2	9	2,5
26300-0810008	3,5	5650	15	0,3 - 2	5,3	2
26300-1010008	1,76	3528	10	0,3 - 2	5,88	2,5
26300-1210010	4,9	5880	30	0,3 - 2	9,8	2,5
26300-1415010	5,88	8820	35	0,3 - 2	9,8	2,5
26300-2015016	29,4	20580	200	0,3 - 2	18,1	2,5
26300-2515030	49	29400	300	0,3 - 2	33,2	2,5

Mounting flange

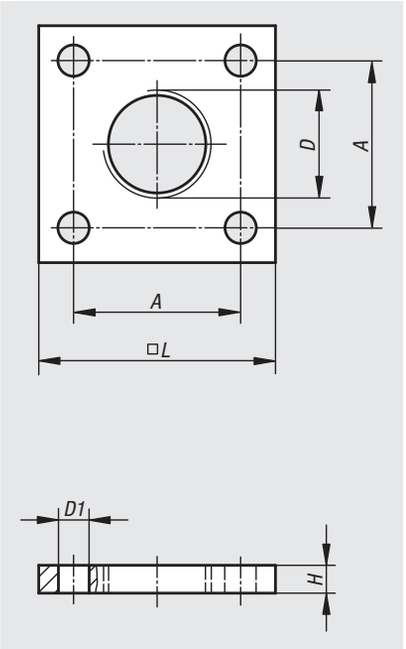

Material:
Steel.

Version:
nickel-plated.

Sample order:
nlm 26320-08075

Note:
When using the mounting flange use a locknut to secure the shock absorber. The compact form allows for space saving designs.

Order No.	A	D	D1	H	L
26320-08075	18	M8x0,75	3,2	4	25
26320-10100	18	M10x1	3,2	4	25
26320-12100	18	M12x1	3,2	4	25
26320-14150	24	M14x1,5	4,5	4	34
26320-20150	28	M20x1,5	6,5	12	40
26320-25150	40	M25x1,5	9	12	54

Notes

27000

Clevis joints
Rod ends
Ball joints
Axial joints
Height adjusting elements

Swivel feet
Levelling feet
Tube-end plugs
Equipment feet
Hinges

Clevis joints for rod ends

Material:
Clevis and pin, steel 1.7225

Version:
galvanized.

Sample order:
nlm 27614-05080516

Note:
These clevises were developed as accessories for rod ends. The clevis opening size C was chosen to accept rod end joints.

Suitable for rod ends 27625, 27626, 27627 and 27628.

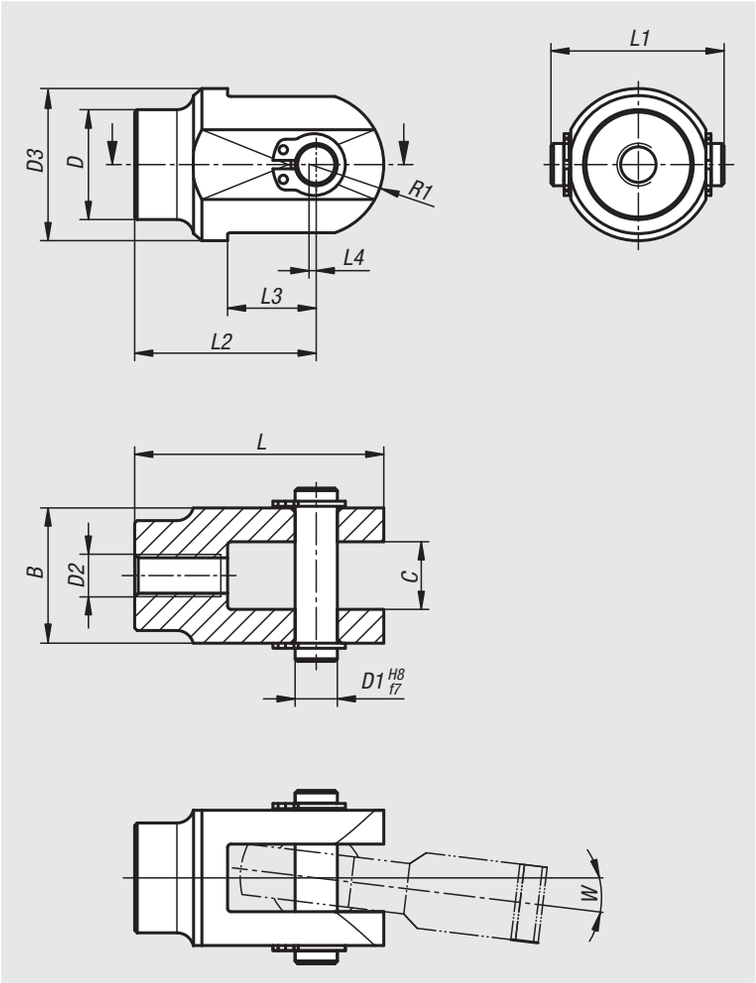

Order No.	B	C	D	D1	D2	D3	L	L1	L2	L3	L4	R1	W°	F static kN
27614-05080516	16	8	13	5	M5	18	29,5	20,5	21,5	10,5	0,5	8,5	6,5	8
27614-06090618	18	9	15	6	M6	20	33,5	22,9	25	11,5	0,5	9	7	9
27614-08120820	20	12	17	8	M8	24	41	24,9	31,5	13,5	1	10,5	8	14,5
27614-10141025	25	14	21	10	M10	28	49,5	30,3	38	16	1	12,5	8	19,5
27614-12161229	29	16	25	12	M12	32	57,5	34,3	44	18	1,5	15	8	23,5
27614-16211638	38	21	30	16	M16	42	76,5	43,3	58	23,5	1,5	20	9	32
27614-20252045	45	25	38	20	M20	50	90,5	51,9	68	29,5	-	22,5	9	43

Clevis joints for rod ends

stainless steel

Material:
Clevis and pins stainless steel 1.4305

Version:
Bright.

Sample order:
nlm 27615-05080516

Note:
These clevises were developed as accessories for rod ends. The clevis opening size C was chosen to accept rod end joints.

Suitable for rod ends 27629 and 27630.

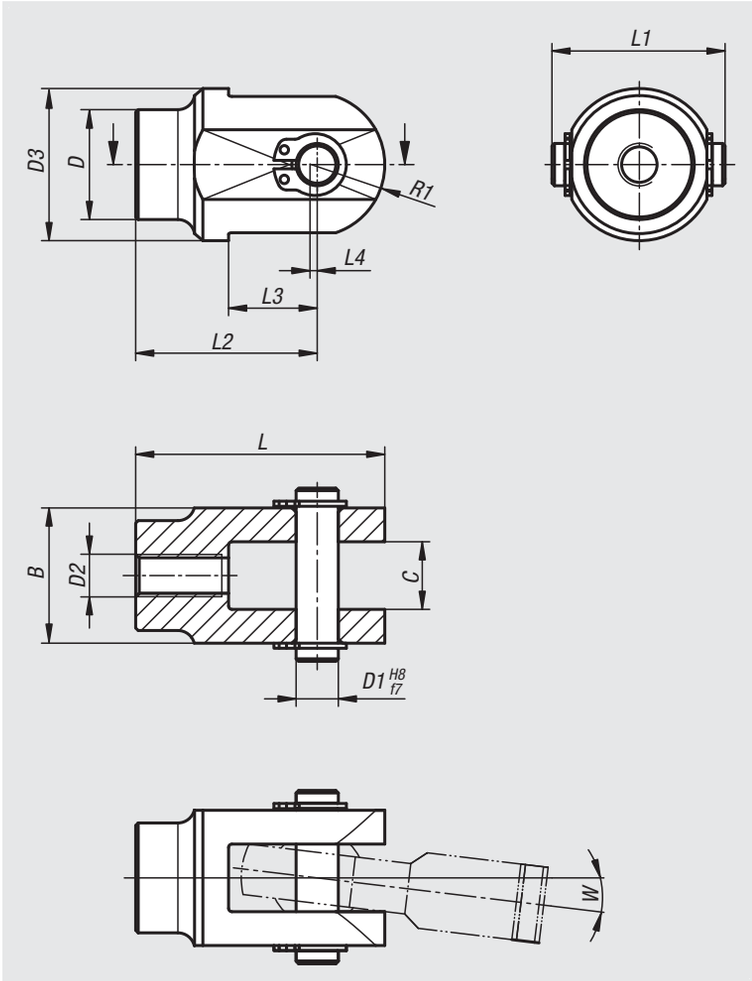

Order No.	B	C	D	D1	D2	D3	L	L1	L2	L3	L4	R1	W°	F static kN
27615-05080516	16	8	13	5	M5	18	29,5	20,5	21,5	10,5	0,5	8,5	6,5	8
27615-06090618	18	9	15	6	M6	20	33,5	22,9	25	11,5	0,5	9	7	9
27615-08120820	20	12	17	8	M8	24	41	24,9	31,5	13,5	1	10,5	8	14,5
27615-10141025	25	14	21	10	M10	28	49,5	30,3	38	16	1	12,5	8	19,5
27615-12161229	29	16	25	12	M12	32	57,5	34,3	44	18	1,5	15	8	23,5
27615-16211638	38	21	30	16	M16	42	76,5	43,3	58	23,5	1,5	20	9	32
27615-20252045	45	25	38	20	M20	50	90,5	51,9	68	29,5	-	22,5	9	43

27616

Hinge plates

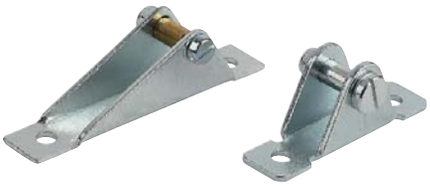

Material:
Steel or stainless steel 1.4404

Version:
Steel galvanized.
Stainless steel bright.

Sample order:
nlm 27616-08070

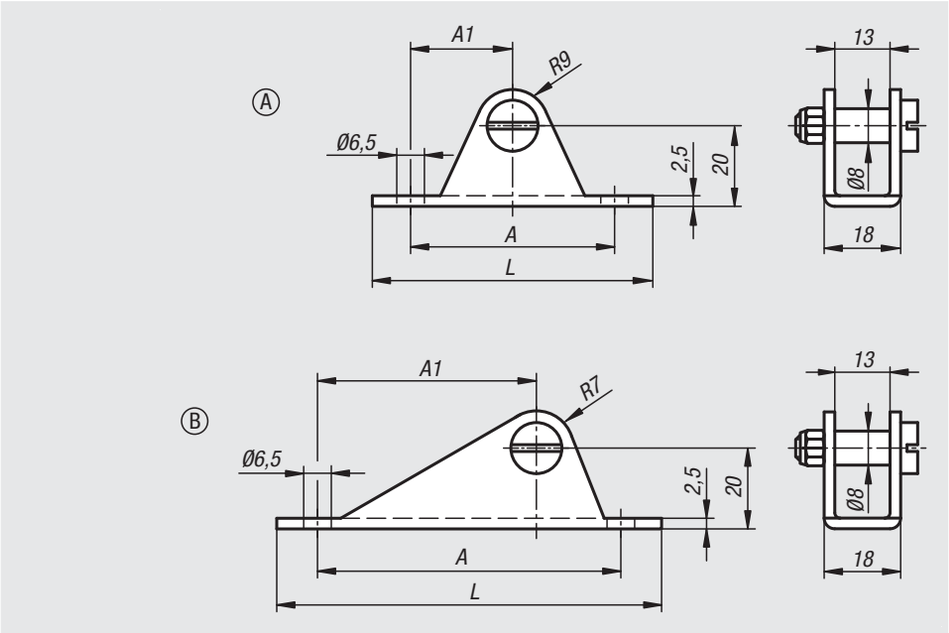

Order No. steel	Order No. stainless steel	Form	A	A1	L	Strength N
27616-08070	**27616-080701**	A	51	25,5	70	1800
27616-08095	**27616-080951**	B	75	54	96	1800

27618

Rod-end eyes

Material:
Steel or 1.4305 stainless steel

Version:
Steel galvanized.
Stainless steel bright.

Sample order:
nlm 27618-03504111

Note:
With internal thread.

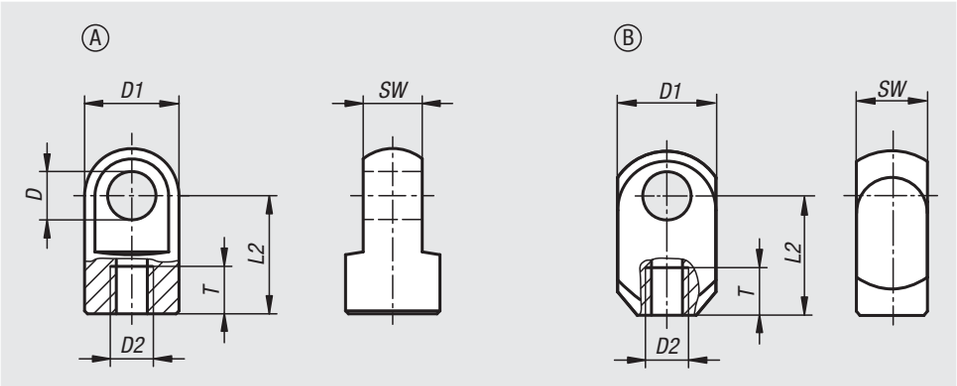

Order No. steel	Order No. stainless steel	Form	D	D1	D2	L2	SW	T
27618-03504111	**-**	A	4,1	8	M3,5	11	4	6
27618-0506116	**27618-05061161**	A	6,1	10	M5	16	6	8
27618-0508116	**-**	B	8,1	15	M5	16	10	8
27618-0808119	**27618-08081191**	A	8,1	14	M8	19	10	11
27618-1008127	**27618-10081271**	A	8,1	18	M10	27	10	12

Clevis joints with snap-in pin

DIN 71752

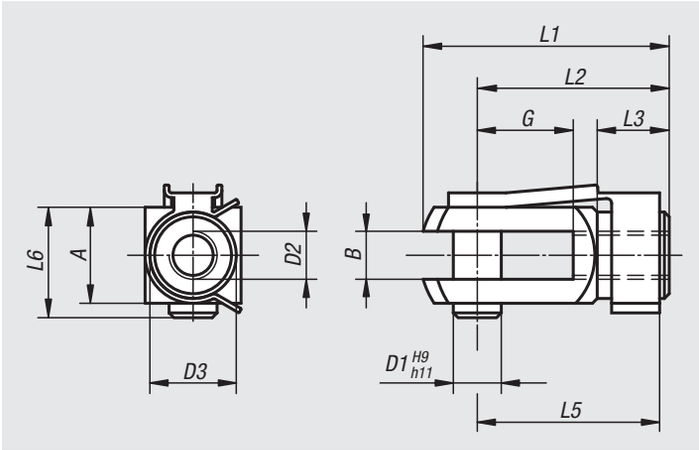

Material:
Clevis and pins free-cutting steel.
Spring, spring steel.

Version:
Galvanised and passivated.

Sample order:
nlm 27620-0510

Order No.	Version	B	G	D1	D2	D3	L1	L2	L3	L5	L6	A
27620-03508	RH thread	4	8	4	M3,5	8	21	16	6	15	10	8
27620-0510	RH thread	5	10	5	M5	9	26	20	7,5	19	12	10
27620-0612	RH thread	6	12	6	M6	10	31	24	9	23	14	12
27620-0816	RH thread	8	16	8	M8	14	42	32	12	31	19	16
27620-0832	RH thread	8	32	8	M8	14	58	48	12	47	19	16
27620-1020	RH thread	10	20	10	M10	18	52	40	15	39	23	20
27620-10120	RH thread	10	20	10	M10x1,25	18	52	40	15	39	23	20
27620-1040	RH thread	10	40	10	M10	18	72	60	15	59	23	20
27620-10140	RH thread	10	40	10	M10x1,25	18	72	60	15	59	23	20
27620-1224	RH thread	12	24	12	M12	20	62	48	18	47	28	24
27620-12124	RH thread	12	24	12	M12x1,25	20	62	48	18	47	28	24
27620-1248	RH thread	12	48	12	M12	20	86	72	18	69	28	24
27620-12148	RH thread	12	48	12	M12x1,25	20	86	72	18	69	28	24
27620-1428	RH thread	14	28	14	M14	24	72	56	22,5	52	31	27
27620-1632	RH thread	16	32	16	M16	26	83	64	24	62	36	32
27620-16132	RH thread	16	32	16	M16x1,5	26	83	64	24	62	36	32
27620-05101	LH thread	5	10	5	M5	9	26	20	7,5	19	12	10
27620-06121	LH thread	6	12	6	M6	10	31	24	9	23	14	12
27620-08161	LH thread	8	16	8	M8	14	42	32	12	31	19	16
27620-08321	LH thread	8	32	8	M8	14	58	48	12	47	19	16
27620-10201	LH thread	10	20	10	M10	18	52	40	15	39	23	20
27620-10401	LH thread	10	40	10	M10	18	72	60	15	59	23	20
27620-12241	LH thread	12	24	12	M12	20	62	48	18	47	28	24
27620-16321	LH thread	16	32	16	M16	26	83	64	24	62	36	32

Snap-in pin

for clevis joints DIN 71752

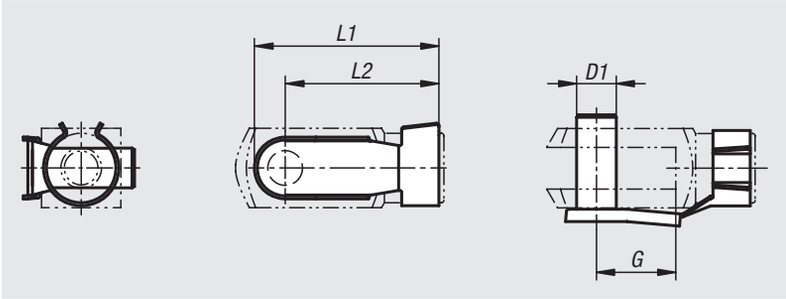

Material:
Steel bolts.
Spring, tempered leaf spring steel.

Version:
galvanized.

Sample order:
nlm 27621-0408

Note:
For clevis joints DIN 71752.

Order No.	D1	G	L1	L2
27621-0408	4	8	18,5	15
27621-0510	5	10	23	19
27621-0612	6	12	28	23
27621-0816	8	16	37	30
27621-0832	8	32	52	46
27621-1020	10	20	46	38
27621-1040	10	40	66	58
27621-1224	12	24	53	45
27621-1248	12	48	78	69
27621-1428	14	28	62	52
27621-1632	16	32	73	62

Clevis joints stainless steel

DIN 71752

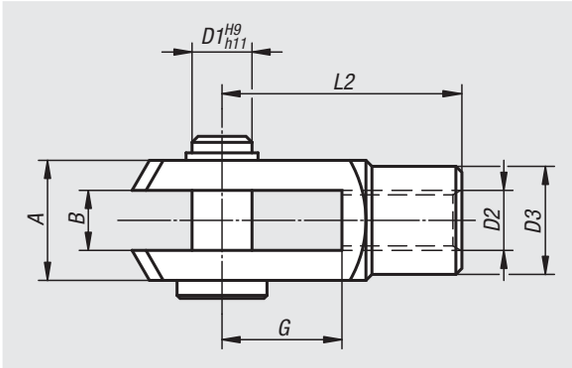

Material:
Stainless steel 1.4305.

Version:
Bright.

Sample order:
nlm 27622-0816

Order No.	Version	B	G	D1	D2	D3	L2	A
27622-0510	RH thread	5	10	5	M5	9	20	10
27622-0612	RH thread	6	12	6	M6	10	24	12
27622-0816	RH thread	8	16	8	M8	14	32	16
27622-0832	RH thread	8	32	8	M8	14	48	16
27622-1020	RH thread	10	20	10	M10	18	40	20
27622-10120	RH thread	10	20	10	M10x1,25	18	40	20
27622-1040	RH thread	10	40	10	M10	18	60	20
27622-1224	RH thread	12	24	12	M12	20	48	24
27622-12124	RH thread	12	24	12	M12x1,25	20	48	24
27622-1248	RH thread	12	48	12	M12	20	72	24
27622-12148	RH thread	12	48	12	M12x1,25	20	72	24
27622-1428	RH thread	14	28	14	M14	24	56	27
27622-1632	RH thread	16	32	16	M16	26	64	32
27622-16132	RH thread	16	32	16	M16x1,5	26	64	32
27622-05101	LH thread	5	10	5	M5	9	20	10
27622-06121	LH thread	6	12	6	M6	10	24	12
27622-08161	LH thread	8	16	8	M8	14	32	16
27622-10201	LH thread	10	20	10	M10	18	40	20
27622-12241	LH thread	12	24	12	M12	20	48	24
27622-16321	LH thread	16	32	16	M16	26	64	32

Clevis joints

DIN 71752

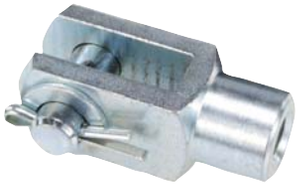

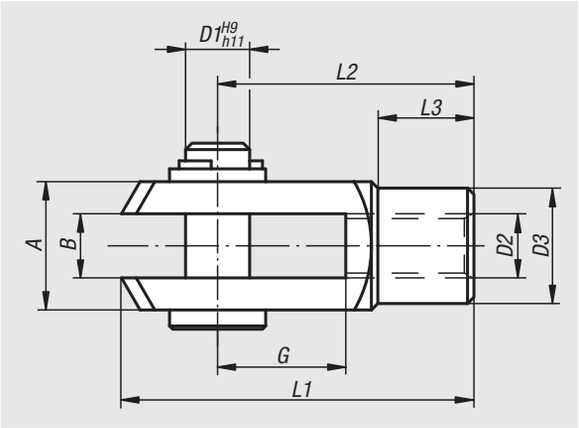

Material:
Steel.

Version:
galvanized.

Sample order:
nlm 27624-0510

Order No.	Version	B	G	D1	D2	D3	L1	L2	L3	A
27624-0510	RH thread	5	10	5	M5	9	26	20	7,5	10
27624-0612	RH thread	6	12	6	M6	10	31	24	9	12
27624-0816	RH thread	8	16	8	M8	14	42	32	12	16
27624-0832	RH thread	8	32	8	M8	14	58	48	12	16
27624-1020	RH thread	10	20	10	M10	18	52	40	15	20
27624-10120	RH thread	10	20	10	M10x1,25	18	52	40	15	20
27624-1040	RH thread	10	40	10	M10	18	72	60	15	20
27624-10140	RH thread	10	40	10	M10x1,25	18	72	60	15	20
27624-1224	RH thread	12	24	12	M12	20	62	48	18	24
27624-12124	RH thread	12	24	12	M12x1,25	20	62	48	18	24
27624-1248	RH thread	12	48	12	M12	20	86	72	18	24
27624-12148	RH thread	12	48	12	M12x1,25	20	86	72	18	24
27624-1428	RH thread	14	28	14	M14	24	72	56	22,5	27
27624-1632	RH thread	16	32	16	M16	26	83	64	24	32
27624-16132	RH thread	16	32	16	M16x1,5	26	83	64	24	32
27624-05101	LH thread	5	10	5	M5	9	26	20	7,5	10
27624-06121	LH thread	6	12	6	M6	10	31	24	9	12
27624-08161	LH thread	8	16	8	M8	14	42	32	12	16
27624-10201	LH thread	10	20	10	M10	18	52	40	15	20
27624-12241	LH thread	12	24	12	M12	20	62	48	18	24
27624-16321	LH thread	16	32	16	M16	26	83	64	24	32

Rod ends with ball bearing

external thread

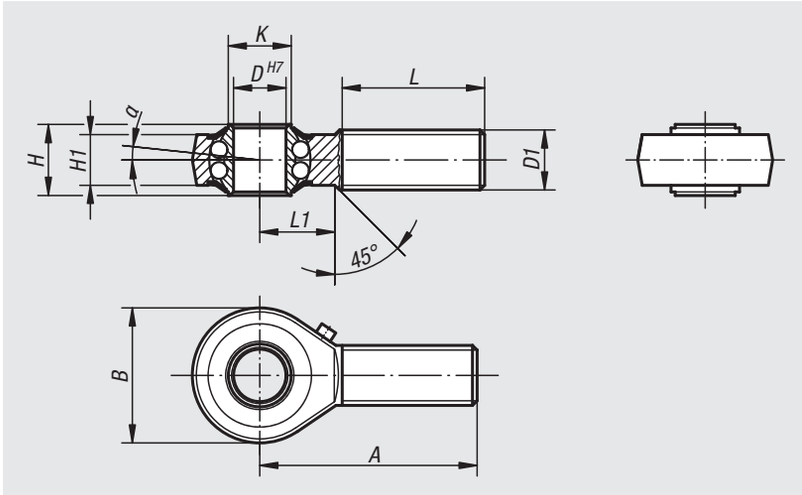

Material:
Casing drop-forged steel, tempered.

Version:
Galvanized.
Bearing play 15 - 40 µm.

Sample order:
nlm 27625-12

Note:
The hardened ball bearing is long-term greased and sealed with cover washers. The connection dimensions comply with DIN 648 Form series KA.
Rod ends are primarily used where movement processes are transmitted and there is no exact alignment. Up to D = 10 the rod ends have a DIN 3405/A flush type grease nipple. From D = 12 they have a DIN 71412/A conical head type grease nipple.

Order No. RH thread	Order No. LH thread	D	D1	A	B	H	H1	K	L	L1	α	Dynamic load rating N	Static load rating N	Rev. limit n max. rpm
27625-06	**27625-061**	6	M6	36	20	9	6,75	9	22	12	8°	2750	650	1350
27625-08	**27625-081**	8	M8	42	24	12	9	10,5	25	15	8,5°	4000	1000	1300
27625-10	**27625-101**	10	M10	48	28	14	10,5	12	29	15	8°	4450	1450	1225
27625-12	**27625-121**	12	M12	54	32	16	12	14,5	33	19	7,5°	4950	1800	1125
27625-16	**27625-161**	16	M16	66	42	21	15	19	40	22	8°	6250	2350	975
27625-20	**27625-201**	20	M20x1,5	78	50	25	18	24,5	47	28	7°	7900	3450	825
27625-22	**27625-221**	22	M22x1,5	84	54	28	20	26	51	26	8°	9300	3980	725

Rod ends with ball bearing

internal thread

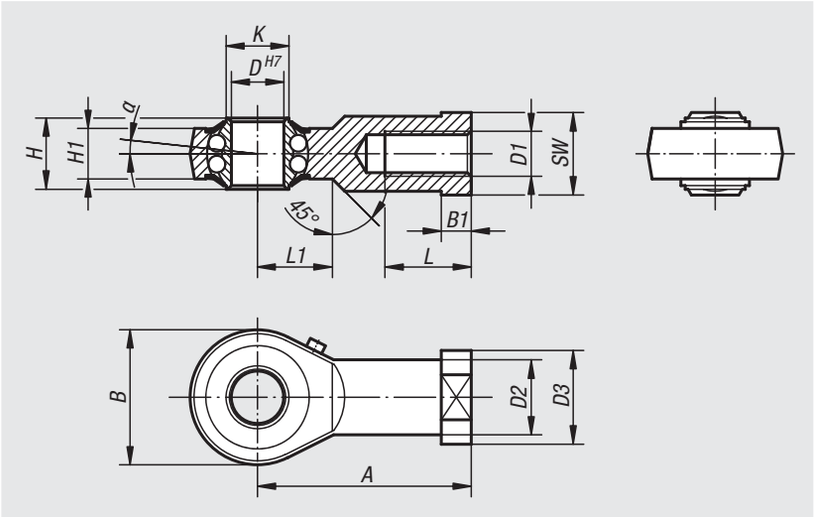

Material:
Casing drop-forged steel, tempered.

Version:
Galvanized.
Internal clearance 15 - 40 µm.

Sample order:
nlm 27626-16

Note:
The hardened ball bearing is long-term greased and sealed with cover washers. The connection dimensions comply with DIN 648 Form Series KA.

Order No. RH thread	Order No. LH thread	D	D1	D2	D3	A	B	B1	H	H1	K	L	L1	SW	α	Dynamic load rating N	Static load rating N	Rev. limit n max. rpm
27626-06	**27626-061**	6	M6	10	13	30	20	5	9	6,75	9	12	10	11	8°	2750	650	1350
27626-08	**27626-081**	8	M8	12,5	16	36	24	5	12	9	10,5	16	12	14	8,5°	4000	1000	1300
27626-10	**27626-101**	10	M10	15	19	43	28	6,5	14	10,5	12	20	15	17	8°	4450	1450	1225
27626-12	**27626-121**	12	M12	17,5	22	50	32	6,5	16	12	14,5	22	16	19	7,5°	4950	1800	1125
27626-16	**27626-161**	16	M16	22	27	64	42	8	21	15	19	28	22	22	8°	6250	2350	975
27626-20	**27626-201**	20	M20x1,5	27,5	34	77	50	10	25	18	24,5	33	26	30	7°	7900	3450	825
27626-22	**27626-221**	22	M22x1,5	30	38	84	54	12	28	20	26	37	26	32	8°	9300	3980	725

Rod ends with plain bearing

external thread

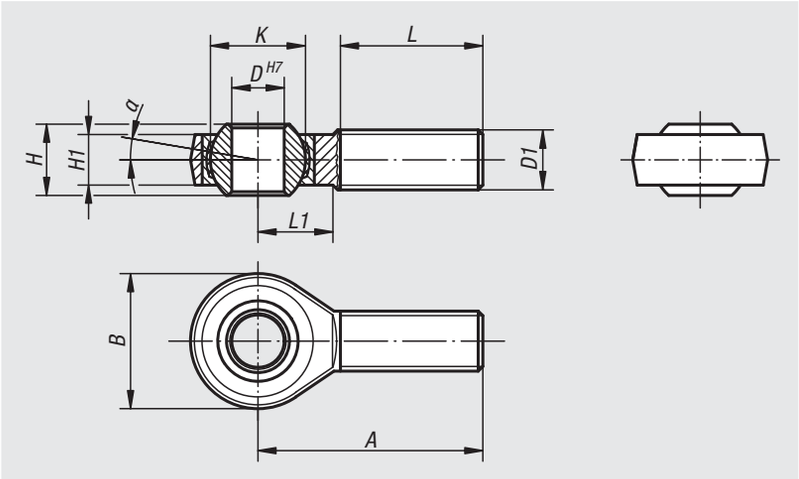

Material:
Housing size (D) 5-12 turned steel.
From size (D) 16 forged steel.
Ball joint ball bearing steel, hardened, ground and polished.
Bearing shell steel with PTFE weave glued in.

Version:
galvanized.

Sample order:
nlm 27627-20

Note:
The rod end bearing is maintenance-free. The connection dimensions comply with DIN 648 series KA.

Order No. RH thread	Order No. LH thread	D	D1	A	B	H	H1	K	L	L1	α	Dynamic base loads kN	Static base loads kN
27627-05	**27627-051**	5	M5	33	18	8	6	11,11	20	9	13°	7,5	4,3
27627-06	**27627-061**	6	M6	36	20	9	6,75	12,7	22	12	13°	9,3	6
27627-08	**27627-081**	8	M8	42	24	12	9	15,87	25	15	13°	16,7	11
27627-10	**27627-101**	10	M10	48	28	14	10,5	19,05	29	15	13°	23,4	17,4
27627-12	**27627-121**	12	M12	54	32	16	12	22,22	33	19	13°	32	23,5
27627-16	**27627-161**	16	M16	66	42	21	15	28,57	40	22	15°	52,7	32
27627-20	**27627-201**	20	M20x1,5	78	50	25	18	34,92	47	28	15°	78,1	43,8
27627-22	**27627-221**	22	M22x1,5	84	54	28	20	38,1	51	26	15°	97,2	52,6

Rod ends igubal® with plain bearing

external thread

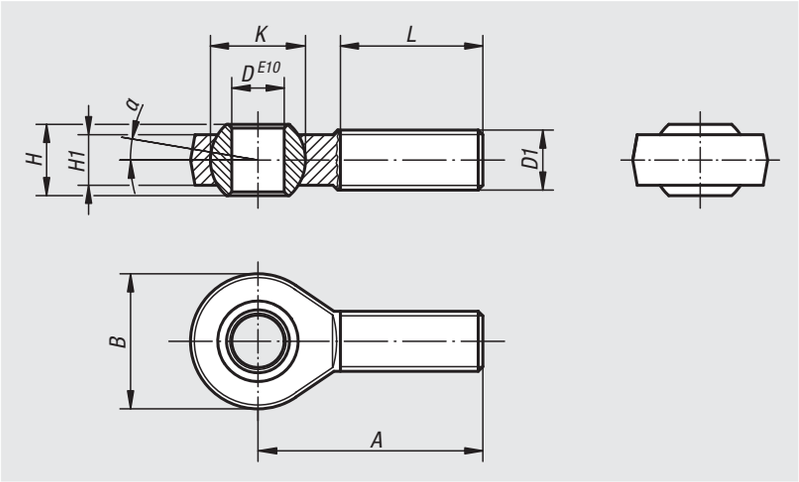

Material:
Housing igumid® G.
Bearing seat iglidur® W300.

Version:
black.

Sample order:
nlm 27627-105

Note:
The rod end has very high rigidity under alternating stresses, it is insensitive to dirt, dust and lint, and is both corrosion and chemical resistant. It is ideal for rotary, oscillating and linear movements.
The connection dimensions comply with DIN ISO 12240 series K.

Tolerances:
The bore of the inner ring has an E10 tolerance. The shaft tolerance should be between h6 and h9.

Order No. RH thread	Order No. LH thread	D	D1	A	B	H	H1	K	L	α	Max. static tensile stress N short-term	Max. static tensile stress N long-term	Max. transverse stress N short-term	Max. transverse stress N long-term
27627-105	**27627-1051**	5	M5	33	18	8	6	11,1	19	15°	800	400	80	40
27627-106	**27627-1061**	6	M6	36	20	9	7	12,7	21	14,5°	1000	500	100	50
27627-108	**27627-1081**	8	M8	42	24	12	9	15,8	25	12,5°	1700	850	200	100
27627-110	**27627-1101**	10	M10	48	30	14	10,5	19	28	12,5°	2500	1250	300	150
27627-110125	**27627-1101251**	10	M10x1,25	48	30	14	10,5	19	28	12,5°	2500	1250	300	150
27627-112	**27627-1121**	12	M12	54	34	16	12	22,2	32	12,5°	2700	1350	400	200
27627-112125	**27627-1121251**	12	M12x1,25	54	34	16	12	22,2	32	12,5°	2700	1350	400	200
27627-114	**27627-1141**	14	M14	61	38	19	13,5	25,25	36	12,5°	3400	1700	700	350
27627-116	**27627-1161**	16	M16	66	42	21	15	28,3	37	11,5°	3900	1950	800	400
27627-116150	**27627-1161501**	16	M16x1,5	66	42	21	15	28,3	37	11,5°	3900	1950	800	400
27627-118150	**27627-1181501**	18	M18x1,5	72	46	23	16,5	31,35	41	11,5°	4200	2100	1000	500
27627-120	**27627-1201**	20	M20	78	50	25	18	34,9	45	11,5°	6000	3000	1300	650
27627-120150	**27627-1201501**	20	M20x1,5	78	50	25	18	34,9	45	11,5°	6000	3000	1300	650

Rod ends with plain bearing

internal thread

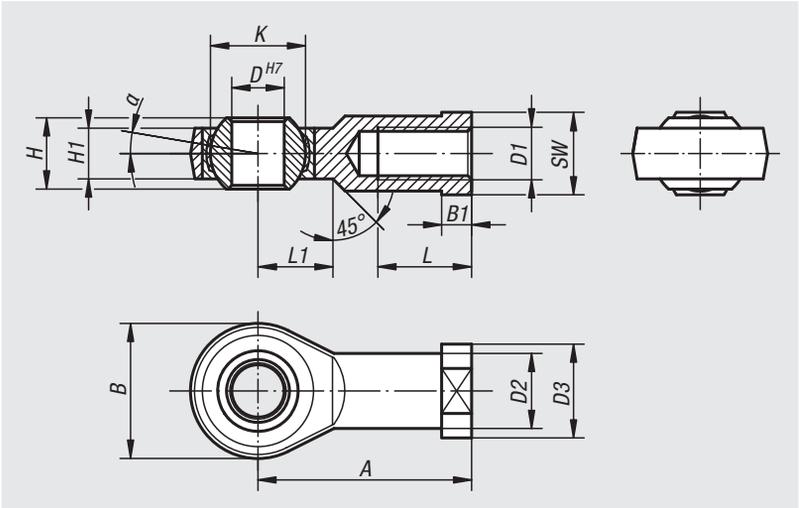

Material:
Housing size (D) 5-12 turned steel.
From size (D) 16 forged steel.
Ball joint ball bearing steel, hardened, ground and polished.
Bearing shell steel with PTFE weave glued in.

Version:
galvanized.

Sample order:
nlm 27628-22

Note:
The rod end bearing is maintenance-free. The connection dimensions comply with DIN 648 series KJ.

Order No. RH thread	Order No. LH thread	D	D1	D2	D3	A	B	B1	H	H1	K	L	L1	SW	α	Dynamic base loads kN	Static base loads kN
27628-05	**27628-051**	5	M5	9	11	27	18	4	8	6	11,11	10	10	9	13°	7,5	8
27628-06	**27628-061**	6	M6	10	13	30	20	5	9	6,75	12,7	12	10	11	13°	9,3	8,9
27628-08	**27628-081**	8	M8	12,5	16	36	24	5	12	9	15,87	16	12	13	13°	16,7	14,1
27628-10	**27628-101**	10	M10	15	19	43	28	6,5	14	10,5	19,05	20	15	17	13°	23,4	19,3
27628-10125	**27628-101251**	10	M10x1,25	15	19	43	28	6,5	14	10,5	19,05	20	15	17	13°	23,4	19,3
27628-12	**27628-121**	12	M12	17,5	22	50	32	6,5	16	12	22,22	22	16	19	13°	32	23,5
27628-12125	**27628-121251**	12	M12x1,25	17,5	22	50	32	6,5	16	12	22,22	22	16	19	13°	32	23,5
27628-16	**27628-161**	16	M16	22	27	64	42	8	21	15	28,57	28	22	22	15°	52,7	32
27628-1615	**27628-16151**	16	M16x1,5	22	27	64	42	8	21	15	28,57	28	22	22	15°	52,7	32
27628-20	**27628-201**	20	M20x1,5	27,5	34	77	50	10	25	18	34,92	33	26	32	15°	78,1	43,8
27628-22	**27628-221**	22	M22x1,5	30	37	84	54	12	28	20	38,1	37	26	32	15°	97,2	52,6

Rod ends igubal® with plain bearing

internal thread

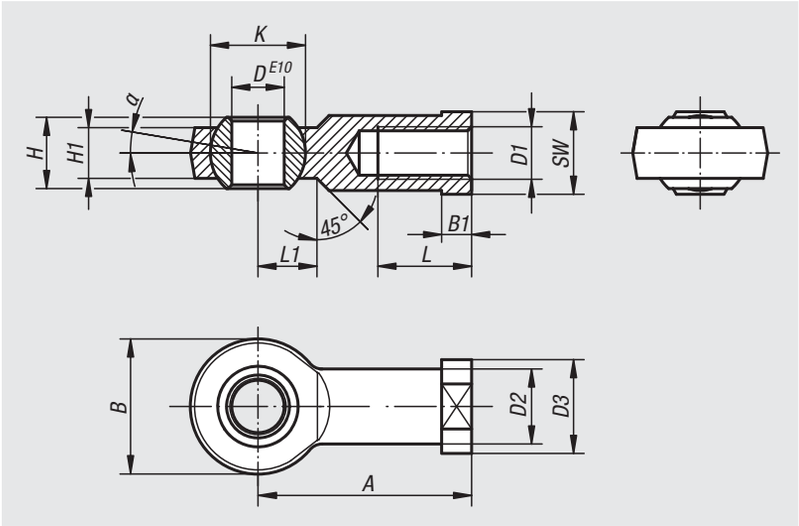

Material:
Housing igumid® G.
Bearing seat iglidur® W300.

Version:
black.

Sample order:
nlm 27628-104

Note:
The rod end has very high rigidity under alternating stresses, it is insensitive to dirt, dust and lint, and is both corrosion and chemical resistant. It is ideal for rotary, oscillating and linear movements.
The connection dimensions comply DIN ISO 12240 series K.

Tolerances:
The bore of the inner ring has an E10 tolerance. The shaft tolerance should be between h6 and h9.

Order No. RH thread	Order No. LH thread	D	D1	D2	D3	A	B	B1	H	H1	K	L	L1	SW	α
27628-104	**27628-1041**	5	M4	9	12	27	18	4	8	6	11,1	10	9	9	15°
27628-105	**27628-1051**	5	M5	9	12	27	18	4	8	6	11,1	10	9	9	15°
27628-106	**27628-1061**	6	M6	10	13	30	20	5	9	7	12,7	12	10	11	14,5°
27628-108	**27628-1081**	8	M8	13	16	36	24	5	12	9	15,8	16	12	14	12,5°
27628-110	**27628-1101**	10	M10	15	19	43	30	6,5	14	10,5	19	20	14	17	12,5°
27628-110125	**27628-1101251**	10	M10x1,25	15	19	43	30	6,5	14	10,5	19	20	14	17	12,5°
27628-112	**27628-1121**	12	M12	18	22	50	34	6,5	16	12	22,2	22	16	17	12,5°
27628-112125	**27628-1121251**	12	M12x1,25	18	22	50	34	6,5	16	12	22,2	22	16	19	12,5°
27628-114	**27628-1141**	14	M14	20	25	57	38	8	19	13,5	25,25	25	18	22	11,5°
27628-116	**27628-1161**	16	M16	22	27	64	42	8	21	15	28,3	28	21	22	11,5°
27628-116150	**27628-1161501**	16	M16x1,5	22	27	64	42	8	21	15	28,3	28	21	22	11,5°
27628-118150	**27628-1181501**	18	M18x1,5	25	31	71	46	10	23	16,5	31,35	32	23	27	11,5°
27628-120	**27628-1201**	20	M20	28	34	77	50	10	25	18	34,9	33	25	30	11,5°
27628-120150	**27628-1201501**	20	M20x1,5	28	34	77	50	10	25	18	34,9	33	25	30	11,5°

Order No. RH thread	Order No. LH thread	D1	Max. static tensile stress N short-term	Max. static tensile stress N long-term	Max. transverse stress N short-term	Max. transverse stress N long-term
27628-104	**27628-1041**	M4	1000	500	250	125
27628-105	**27628-1051**	M5	1000	500	250	125
27628-106	**27628-1061**	M6	1400	700	400	200
27628-108	**27628-1081**	M8	2100	1050	700	350
27628-110	**27628-1101**	M10	3100	1550	800	400
27628-110125	**27628-1101251**	M10x1,25	3100	1550	800	400
27628-112	**27628-1121**	M12	3600	1800	900	450
27628-112125	**27628-1121251**	M12x1,25	3600	1800	900	450
27628-114	**27628-1141**	M14	4000	2000	1000	500
27628-116	**27628-1161**	M16	4200	2100	1300	650
27628-116150	**27628-1161501**	M16x1,5	4200	2100	1300	650
27628-118150	**27628-1181501**	M18x1,5	4600	2300	1600	800
27628-120	**27628-1201**	M20	5400	2700	2100	1050
27628-120150	**27628-1201501**	M20x1,5	5400	2700	2100	1050

Rod ends with plain bearing

external thread, stainless steel

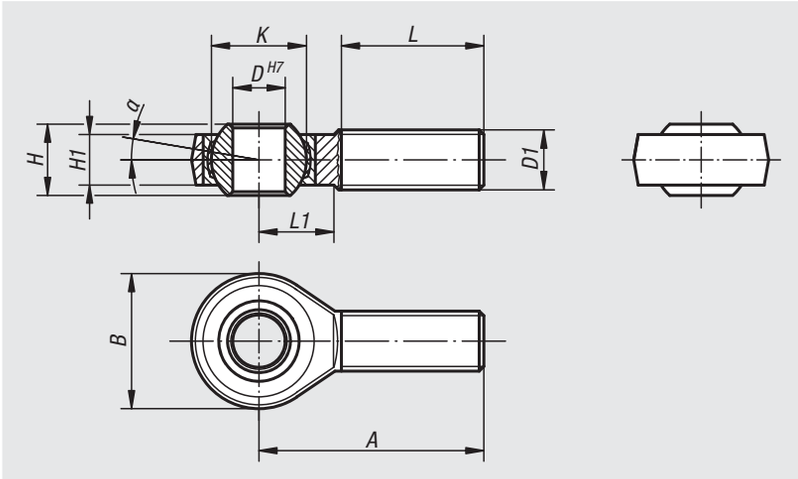

Material:
Housing forged special steel 1.4057.
Ball joint 1.4034 hardened and ground.
Bearing shell stainless steel 1.4571.

Version:
Polished.

Sample order:
nlm 27629-20

Note:
The rod end bearing is maintenance-free.
The connection dimensions comply with DIN 648 Form Series KA.

Order No. RH thread	Order No. LH thread	D	D1	A	B	H	H1	K	L	L1	α	Dynamic base loads kN	Static base loads kN
27629-05	**27629-051**	5	M5	33	18	8	6	11,11	20	9	13°	7,5	6,2
27629-06	**27629-061**	6	M6	36	20	9	6,75	12,7	22	12	13°	9,3	8,8
27629-08	**27629-081**	8	M8	42	24	12	9	15,87	25	15	13°	16,7	16,1
27629-10	**27629-101**	10	M10	48	28	14	10,5	19,05	29	15	13°	23,4	25,5
27629-12	**27629-121**	12	M12	54	32	16	12	22,22	33	19	13°	32	34,5
27629-16	**27629-161**	16	M16	66	42	21	15	28,57	40	22	15°	52,7	60,6
27629-20	**27629-201**	20	M20x1,5	78	50	25	18	34,92	47	28	15°	78,1	83,1
27629-22	**27629-221**	22	M22x1,5	84	54	28	20	38,1	51	26	15°	97,2	99,7

Rod ends with plain bearing

internal thread, stainless steel

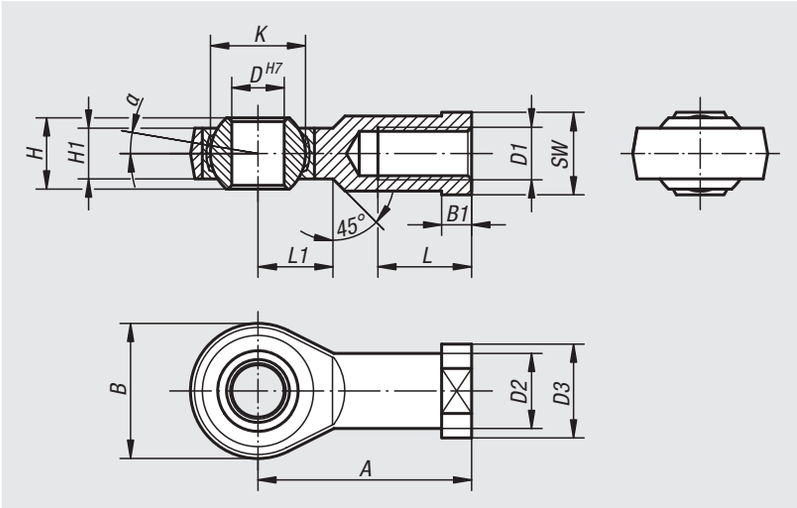

Material:
Housing forged stainless steel 1.4057.
Ball joint 1.4034 hardened and ground.
Bearing shell stainless steel 1.4571.

Version:
Polished.

Sample order:
nlm 27630-22

Note:
The rod end bearing is maintenance-free.
The connection dimensions comply with DIN 648 Form Series KJ.

Order No. RH thread	Order No. LH thread	D	D1	D2	D3	A	B	B1	H	H1	K	L	L1	SW	α	Dynamic base loads kN	Static base loads kN
27630-05	**27630-051**	5	M5	9	11	27	18	4	8	6	11,11	10	10	9	13°	7,5	11,8
27630-06	**27630-061**	6	M6	10	13	30	20	5	9	6,75	12,7	12	10	11	13°	9,3	13,1
27630-08	**27630-081**	8	M8	12,5	16	36	24	5	12	9	15,87	16	12	13	13°	16,7	20,7
27630-10	**27630-101**	10	M10	15	19	43	28	6,5	14	10,5	19,05	20	15	17	13°	23,4	28,3
27630-10125	**27630-101251**	10	M10x1,25	15	19	43	28	6,5	14	10,5	19,05	20	15	17	13°	23,4	28,3
27630-12	**27630-121**	12	M12	17,5	22	50	32	6,5	16	12	22,22	22	16	19	13°	32	34,5
27630-12125	**27630-121251**	12	M12x1,25	17,5	22	50	32	6,5	16	12	22,22	22	16	19	13°	32	34,5
27630-16	**27630-161**	16	M16	22	27	64	42	8	21	15	28,57	28	22	22	15°	52,7	60,6
27630-1615	**27630-16151**	16	M16x1,5	22	27	64	42	8	21	15	28,57	28	22	22	15°	52,7	60,6
27630-20	**27630-201**	20	M20x1,5	27,5	34	77	50	10	25	18	34,92	33	26	32	15°	78,1	83,1
27630-22	**27630-221**	22	M22x1,5	30	37	84	54	12	28	20	38,1	37	26	32	15°	97,2	99,7

Rod ends with plain bearing

external thread, narrow version

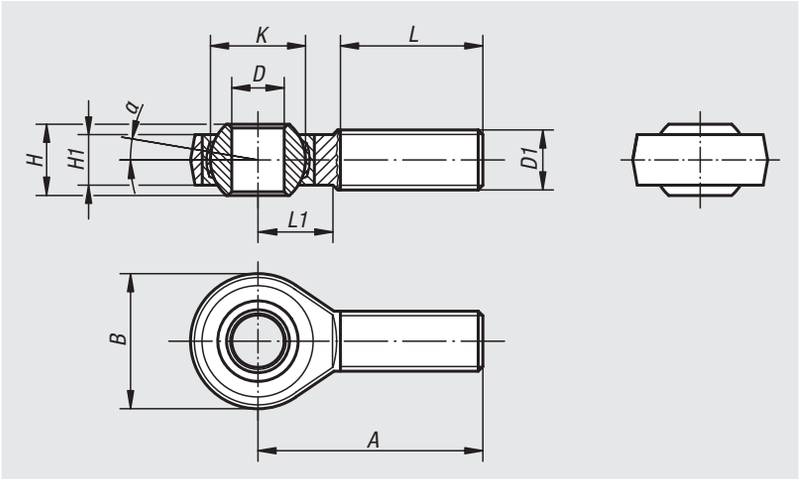

Material:
Housing size (D) 6-10 turned steel.
From size (D) 12 forged steel.
Ball joint ball bearing steel, hardened, ground, polished and hard chromed.
Bearing shell ball bearing steel with PTFE weave glued in.

Version:
galvanized.

Sample order:
nlm 27631-20

Note:
The rod end bearing is maintenance-free.
The connection dimensions comply with DIN 648 Form Series E.

Order No. RH thread	Order No. LH thread	D	D1	A	B	H	H1	K	L	L1	α	Dynamic base loads kN	Static base loads kN
27631-06	**27631-061**	6 -0,008	M6	36	20	6	4,4	10	18	11	12°	3,6	8,2
27631-08	**27631-081**	8 -0,008	M8	42	24	8	6	13	22	12	12°	5,8	12,9
27631-10	**27631-101**	10 -0,008	M10	48	28	9	7	16	26	15	12°	8,6	17,6
27631-12	**27631-121**	12 -0,008	M12	54	34	10	8	18	28	15	8°	11,4	24,5
27631-16	**27631-161**	17 -0,008	M16	69	46	14	11	25	36	23	8°	22	45
27631-20	**27631-201**	20 -0,010	M20x1,5	78	53	16	13	29	43	25	8°	31,5	60

Rod ends with plain bearing

internal thread, narrow version

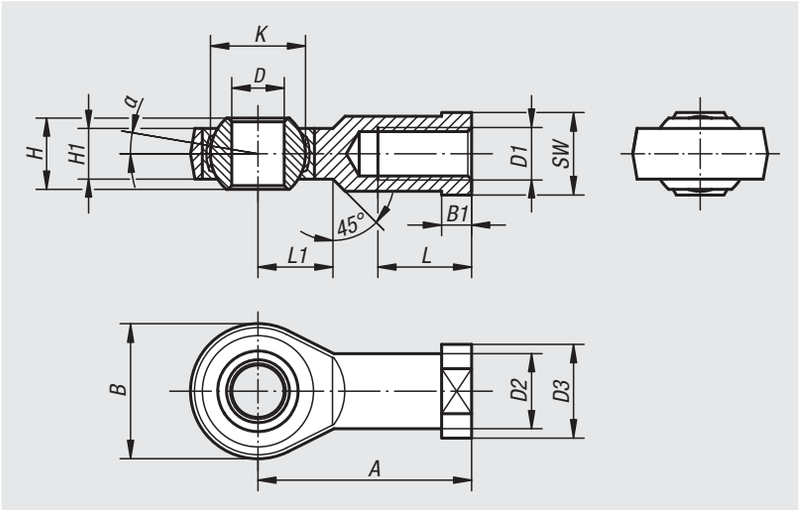

Material:
Housing size (D) 6-10 turned steel.
From size (D) 12 forged steel.
Ball joint ball bearing steel, hardened, ground, polished and hard chromed.
Bearing shell ball bearing steel with PTFE weave glued in.

Version:
galvanized.

Sample order:
nlm 27632-12

Note:
The rod end bearing is maintenance-free.
The connection dimensions comply with DIN 648 Form Series E.

Order No. RH thread	Order No. LH thread	D	D1	D2	D3	A	B	B1	H	H1	K	L	L1	SW	α	Dynamic base loads kN	Static base loads kN
27632-06	**27632-061**	6 -0,008	M6	10	13	30	20	5	6	4,4	10	12	11	11	12°	3,6	8,2
27632-08	**27632-081**	8 -0,008	M8	12,5	16	36	24	5	8	6	13	16	12	14	12°	5,8	12,9
27632-10	**27632-101**	10 -0,008	M10	15	19	43	28	6,5	9	7	16	20	13	17	12°	8,6	17,6
27632-10125	**27632-101251**	10 -0,008	M10x1,25	15	19	43	28	6,5	9	7	16	20	13	17	12°	8,6	17,6
27632-12	**27632-121**	12 -0,008	M12	17,5	22	50	34	6,5	10	8	18	22	15	19	8°	11,4	24,5
27632-12125	**27632-121251**	12 -0,008	M12x1,25	17,5	22	50	34	6,5	10	8	18	22	15	19	8°	11,4	24,5
27632-16	**27632-161**	17 -0,008	M16	24	30	67	46	10	14	11	25	33	20	27	8°	22	45
27632-20	**27632-201**	20 -0,010	M20x1,5	27,5	35	77	53	10	16	13	29	38	23	32	8°	31,5	60

Spherical bearings K/E series

DIN ISO 12240-1

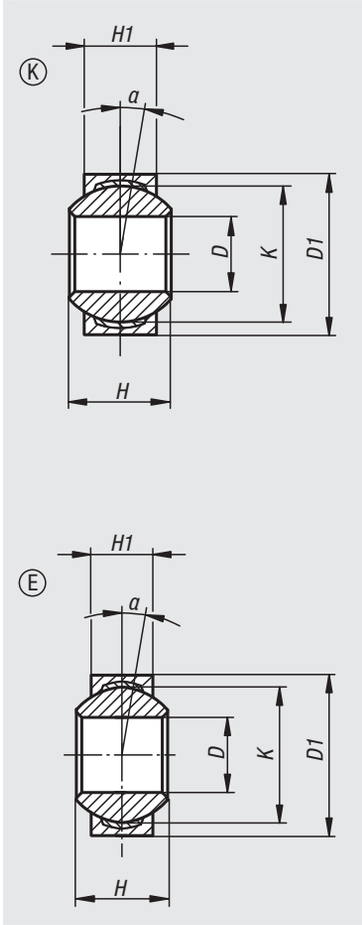

Material:
Bearing shell stainless steel 1.4571.
Ball joint stainless steel 1.4034.
Bearing surface PTFE-stainless steel insert.

Version:
Ground, polished.

Sample order:
nlm 27632-02-10513

Note:
Suitable for high dynamic loads. The fitting dimensions comply with DIN ISO 12240-1 E/K.

Pivot bearings K series DIN ISO 12240-1

Order No.	D	D1	H	H1	K	α	Dynamic load rating N	Static load rating N	Speed limit rpm
27632-02-10513	5 H7	13 h7	8	6	11,11	13°	7500	12500	600
27632-02-10615	6 H7	15 h7	9	6,75	12,7	13°	9300	15500	530
27632-02-10818	8 H7	18 h7	12	9	15,87	14°	16700	27800	420
27632-02-11021	10 H7	21 h7	14	10,5	19,05	13°	23400	39000	350
27632-02-11224	12 H7	24,5 h7	16	12	22,22	13°	32000	34500	300
27632-02-11631	16 H7	31,5 h7	21	15	28,57	15°	52500	88000	230

Pivot bearings E series DIN ISO 12240-1

Order No.	D	D1	H	H1	K	α	Dynamic load rating N	Static load rating N
27632-02-20614	6 -0,008	14 -0,008	6	4	10	13°	4000	9000
27632-02-20816	8 -0,008	16 -0,008	8	5	13	15°	7000	15600
27632-02-21019	10 -0,008	19 -0,009	9	6	16	12°	10000	23400
27632-02-21222	12 -0,008	22 -0,009	10	7	18	11°	14000	32000
27632-02-21630	16 -0,008	30 -0,009	14	10	25	10°	39000	65000

Ball joints

DIN 71802

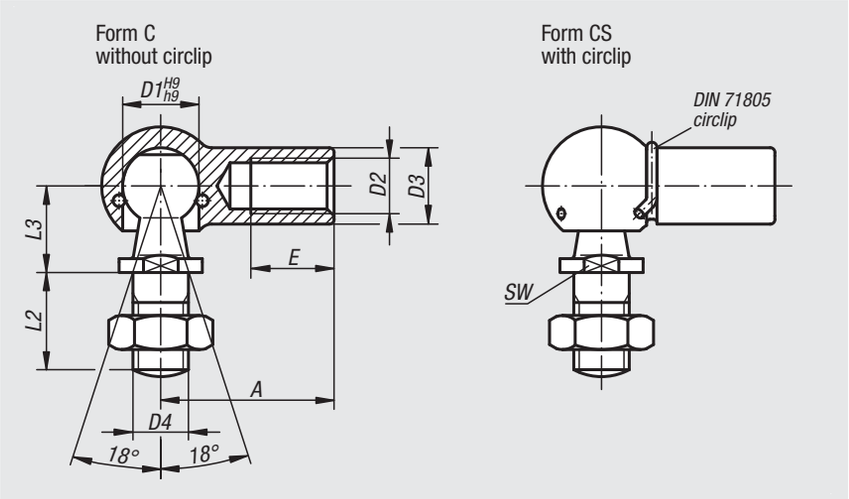

Material:
Steel or 1.4305 stainless steel.
Neoprene seal.

Version:
Galvanised and passivated. Stainless steel version bright.

Sample order:
nlm 27650-08051

Note:
With snap ring. LH thread refers to dimension D2. Stainless steel version: protected against dust, dirt, water spray, vapours. For use in temperature range from -30 °C to + 110 °C.
Seal, included.

Order No. RH thread	Order No. LH thread	Form	Main material	D1	D2	D3	D4	A	L2	L3	E	SW
27650-0805	**27650-080501**	C	steel	8	M5	8	M5	22	10,2	9	10,2	7
27650-1006	**27650-100601**	C	steel	10	M6	10	M6	25	12,5	11	11,5	8
27650-1308	**27650-130801**	C	steel	13	M8	13	M8	30	16,5	13	14	11
27650-1610	**27650-161001**	C	steel	16	M10	16	M10	35	20	16	15,5	13
27650-1612	**27650-161201**	C	steel	16	M12	16	M12	35	20	16	15,5	13
27650-1914	**27650-191401**	C	steel	19	M14x1,5	22	M14x1,5	45	28	20	21,5	16
27650-1916	**27650-191601**	C	steel	19	M16	22	M16	45	28	20	21,5	16

Order No. RH thread	Order No. LH thread	Order No. RH thread with seal	Order No. LH thread with seal	Form	Main material	D1	D2	D3	D4	A	L2	L3	E	SW
27650-080351	-	-	-	CS	steel	8	M3,5	8	M4	18	10,2	9	8	7
27650-08051	**27650-080511**	-	-	CS	steel	8	M5	8	M5	22	10,2	9	10,2	7
27650-10061	**27650-100611**	-	-	CS	steel	10	M6	10	M6	25	12,5	11	11,5	8
27650-13081	**27650-130811**	-	-	CS	steel	13	M8	13	M8	30	16,5	13	14	11
27650-16101	**27650-161011**	-	-	CS	steel	16	M10	16	M10	35	20	16	15,5	13
27650-16121	**27650-161211**	-	-	CS	steel	16	M12	16	M12	35	20	16	15,5	13
27650-19141	**27650-191411**	-	-	CS	steel	19	M14x1,5	22	M14x1,5	45	28	20	21,5	16
27650-19161	**27650-191611**	-	-	CS	steel	19	M16	22	M16	45	28	20	21,5	16
27650-08052	**27650-080521**	**27650-108052**	**27650-108051**	CS	stainless steel	8	M5	8	M5	22	10,2	9	10,2	7
27650-10062	**27650-100621**	**27650-110062**	**27650-110061**	CS	stainless steel	10	M6	10	M6	25	12,5	11	11,5	8
27650-13082	**27650-130821**	**27650-113082**	**27650-113081**	CS	stainless steel	13	M8	13	M8	30	16,5	13	14	11
27650-16102	**27650-161021**	**27650-116102**	**27650-116101**	CS	stainless steel	16	M10	16	M10	35	20	16	15,5	13
27650-16122	**27650-161221**	**27650-116122**	**27650-116121**	CS	stainless steel	16	M12	16	M12	35	20	16	15,5	13

Ball seats for ball joints

DIN 71805

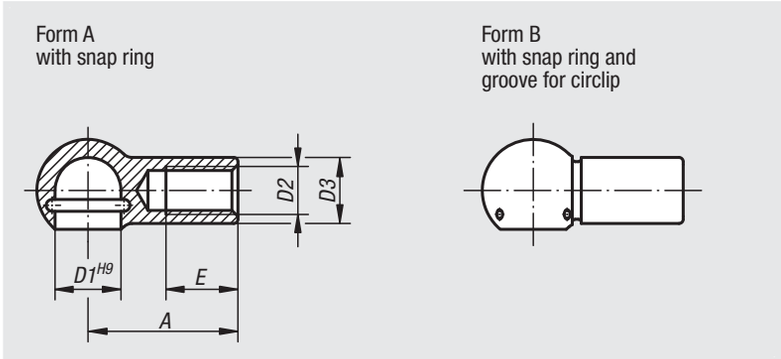

Material:
Steel.

Version:
Galvanised and passivated.

Sample order:
nlm 27655-08051

Note:
The ball sockets are spare parts for DIN 71802 ball joints. See circlips for ball seats for suitable retaining rings for Form B.

On request:
Stainless steel ball seats.

Order No.	Form	D1	D2	D3	A	E
27655-0805	A	8	M5	8	22	10,2
27655-1006	A	10	M6	10	25	11,5
27655-1308	A	13	M8	13	30	14
27655-1610	A	16	M10	16	35	15,5
27655-1612	A	16	M12	16	35	15,5
27655-1914	A	19	M14x1,5	22	45	21,5
27655-1916	A	19	M16	22	45	21,5

Order No.	Form	D1	D2	D3	A	E
27655-080351	B	8	M3,5	8	18	8
27655-08051	B	8	M5	8	22	10,2
27655-10061	B	10	M6	10	25	11,5
27655-13081	B	13	M8	13	30	14
27655-16101	B	16	M10	16	35	15,5
27655-16121	B	16	M12	16	35	15,5
27655-19141	B	19	M14x1,5	22	45	21,5
27655-19161	B	19	M16	22	45	21,5

Ball studs DIN 71803

for DIN 71802 angle joints

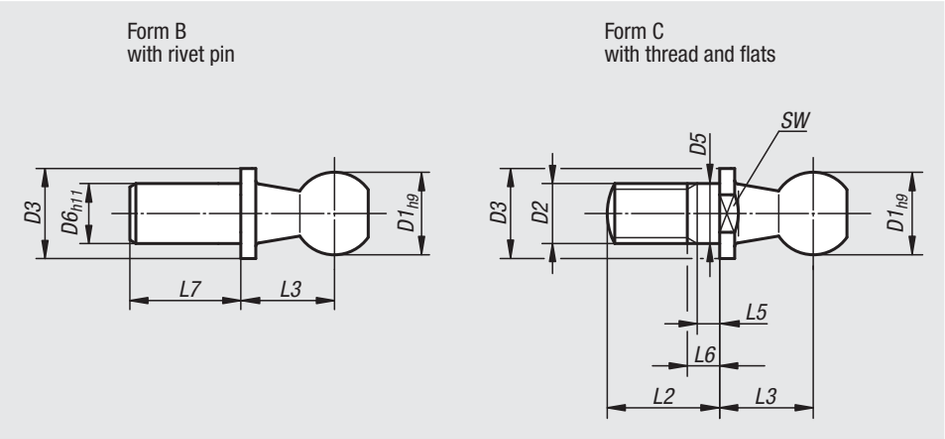

Material:
Steel.

Version:
Galvanised and passivated.

Sample order:
nlm 27656-1006

Note:
The ball studs are spare parts for DIN 71802 ball joints.

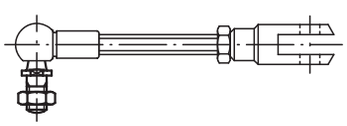

Order No.	Form	Version	D1	D2	D3	D5	D6	L2	L3	L5 min.	L6 max.	L7	SW
27656-0840	B	short	8	-	8	-	5	-	9	-	-	4	-
27656-1045	B	short	10	-	10	-	6	-	11	-	-	4,5	-
27656-1305	B	short	13	-	13	-	8	-	13	-	-	5	-
27656-1606	B	short	16	-	16	-	10	-	16	-	-	6	-
27656-1912	B	short	19	-	19	-	14	-	20	-	-	12	-
27656-0875	B	long	8	-	8	-	5	-	9	-	-	7,5	-
27656-1080	B	long	10	-	10	-	6	-	11	-	-	8	-
27656-1310	B	long	13	-	13	-	8	-	13	-	-	10	-
27656-1613	B	long	16	-	16	-	10	-	16	-	-	13	-
27656-1918	B	long	19	-	19	-	14	-	20	-	-	18	-
27656-0805	C	-	8	M5	8	5	-	10,2	9	1,2	4	-	7
27656-1006	C	-	10	M6	10	6	-	12,5	11	1,2	4	-	8
27656-1308	C	-	13	M8	13	8	-	16,5	13	1,5	5,3	-	11
27656-1610	C	-	16	M10	16	10	-	20	16	2,5	7,3	-	13
27656-1612	C	-	16	M12	16	12	-	20	16	2,5	7,3	-	13
27656-1914	C	-	19	M14x1,5	19	14	-	28	20	5	10,8	-	16

27657

Angle brackets

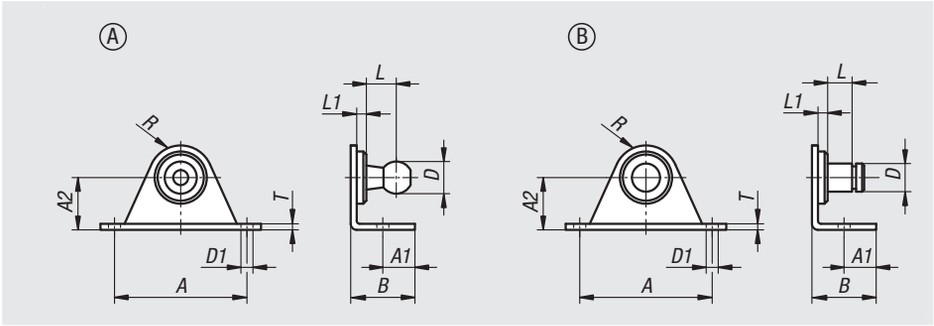

Material:
Steel or stainless steel 1.4404

Version:
Steel galvanized.
Stainless steel bright.

Sample order:
nlm 27657-00810

Order No. steel	Order No. stainless steel	Form	A	A1	A2	B	D	D1	L	L1	R	T	Strength N
27657-00810	**27657-008101**	A	19	4,25	10	10	8	3,4	8	3	4	1,5	180
27657-00816	**27657-008161**	A	40	10	16	20	8	4,3	8	3	10	2	500
27657-01016	**27657-010161**	A	40	10	16	20	10	4,3	9	3	10	2	800
27657-01316	**27657-013161**	A	40	10	16	20	13	4,3	9,5	3	10	2	1200
27657-10410	**27657-104101**	B	19	4,25	10	10	4	3,4	5	2	4	1,5	180
27657-10610	**27657-106101**	B	19	4,25	10	10	6	3,4	7	4	4	1,5	180
27657-10616	**27657-106161**	B	40	10	16	20	6	4,3	7	4	10	2	500
27657-10816	**27657-108161**	B	40	10	16	20	8	4,3	11	5	10	2	1200

27658

Side brackets

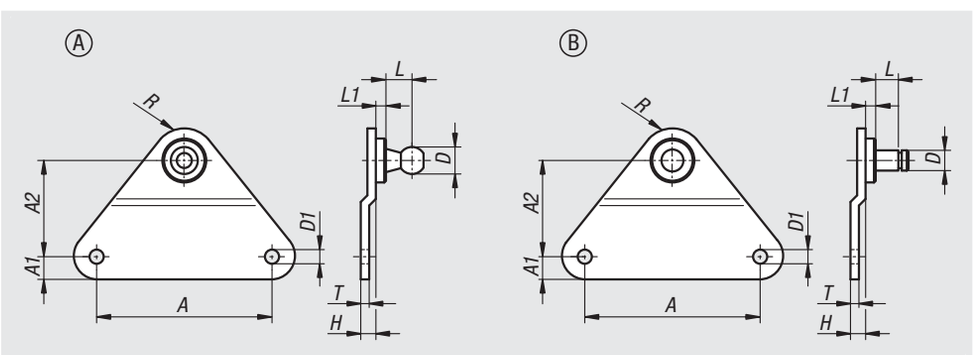

Material:
Steel or stainless steel 1.4404

Version:
Steel galvanized.
Stainless steel bright.

Sample order:
nlm 27658-00815

Order No. steel	Order No. stainless steel	Form	A	A1	A2	D	D1	H	L	L1	R	T	Strength N
27658-00815	**27658-008151**	A	18	5	15,5	8	4,3	2,5	8	3	5	1,5	180
27658-00830	**27658-008301**	A	55	7	30	8	5,3	5	8	3	10	3	500
27658-01030	**27658-010301**	A	55	7	30	10	5,3	5	8	3	10	3	800
27658-01330	**27658-013301**	A	55	7	30	13	5,3	5	9,5	3	10	3	1200
27658-10415	**27658-104151**	B	18	5	15,5	4	4,3	2,5	4,5	2	5	1,5	180
27658-10615	**27658-106151**	B	18	5	15,5	6	4,3	2,5	6,5	4	5	1,5	180
27658-10630	**27658-106301**	B	55	7	30	6	5,3	5	7	4	10	3	500
27658-10830	**27658-108301**	B	55	7	30	8	5,3	5	11	5	10	3	1200

27659

Round brackets

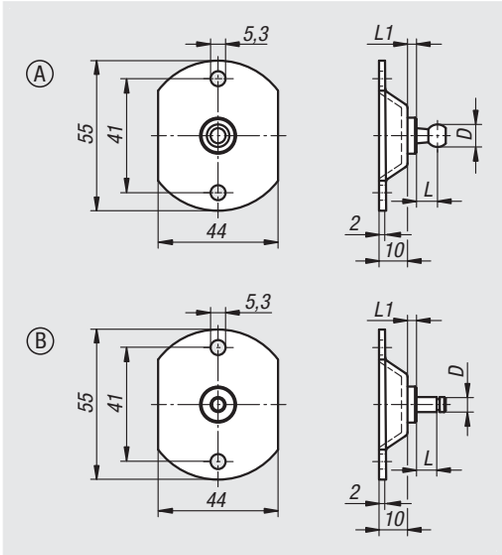

Material:
Steel or stainless steel 1.4404

Version:
Steel galvanized.
Stainless steel bright.

Sample order:
nlm 27659-00855

Order No. steel	Order No. stainless steel	Form	D	L	L1	Strength N
27659-00855	**27659-008551**	A	8	8	3	500
27659-01055	**27659-010551**	A	10	9	3	800
27659-01355	**27659-013551**	A	13	9,5	3	1200
27659-10655	**27659-106551**	B	6	7	4	500
27659-10855	**27659-108551**	B	8	11	5	1200

27660

Circlips for ball seats

DIN 71805

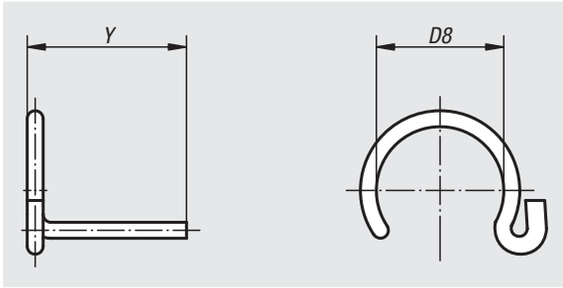

Material:
Spring steel

Version:
Galvanised and passivated.

Sample order:
nlm 27660-08

Note:
For DIN 71805 ball seats.

Order No.	Type	D8	Y	Suitable for ball sockets with D1
27660-08	S 8	7	12	8
27660-10	S10	8,7	12,5	10
27660-13	S13	11	15,7	13
27660-16	S16	13	19	16
27660-19	S19	20	24	19

Axial joints

similar to DIN 71802

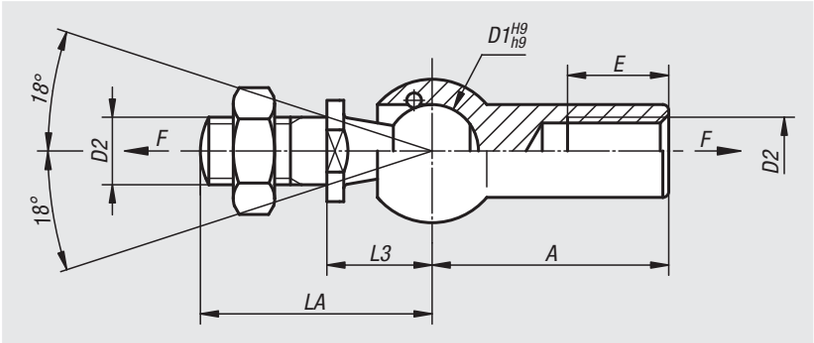

Material:
Steel or 1.4305 stainless steel.
Stainless steel versions have Neoprene seals.

Version:
Galvanised and passivated. Stainless steel version bright.

Sample order:
nlm 27665-10

Note:
Protected against dust, dirt, water spray and vapour.
Applicable temperature range from -30 °C to +110 °C.

On request:
Axial joints with greater extraction force and left-hand thread available.

Order No.	Main material	D1	D2	A	LA	L3	E	Extraction force F N
27665-08	steel	8	M5	22	19,2	9	10,2	30
27665-10	steel	10	M6	25	23,5	11	11,5	40
27665-13	steel	13	M8	30	29,5	13	14	60
27665-16	steel	16	M10	35	36	16	15,5	80
27665-19	steel	19	M14x1,5	45	48	20	21,5	100
27665-110	stainless steel	10	M6	25	23,5	11	11,5	40
27665-116	stainless steel	16	M10	35	36	16	15,5	80

Axial joints for tractive forces

adjustable

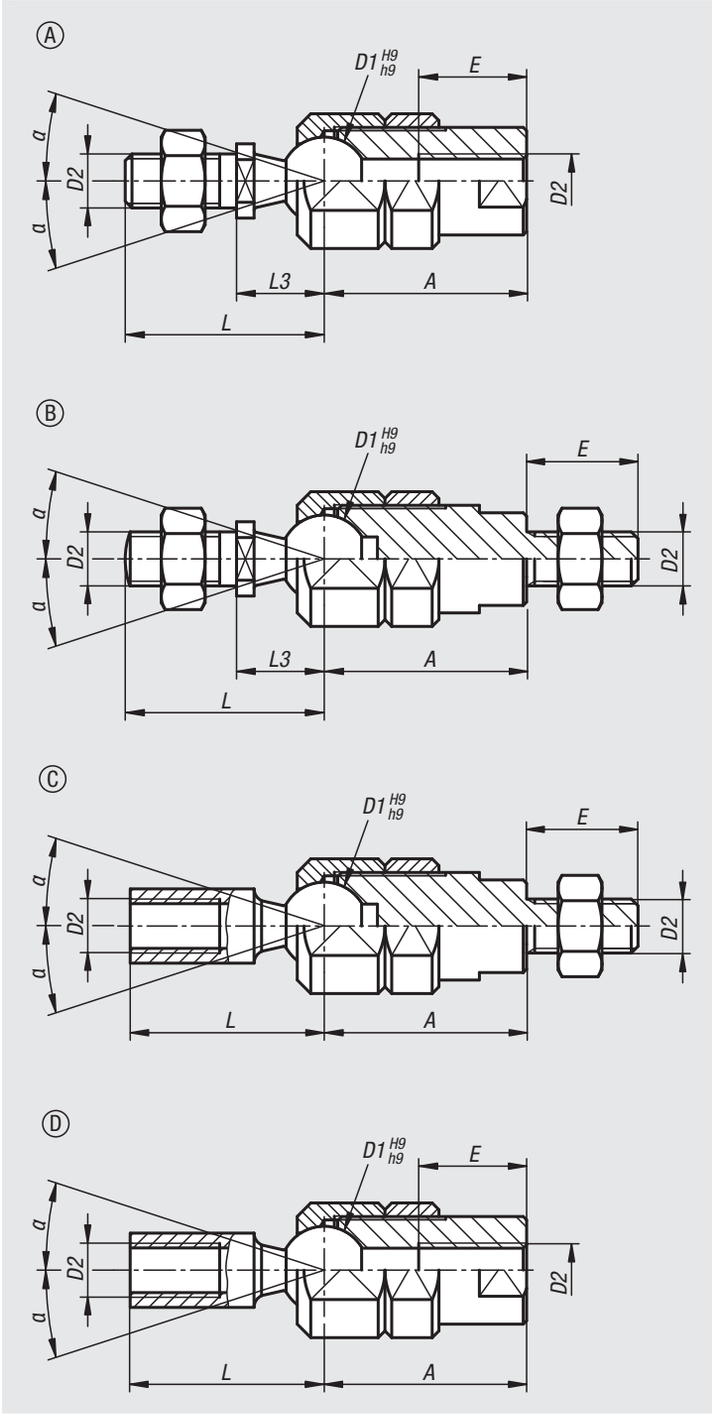

Material:
Steel.

Version:
Ball thrust pins galvanized and chromed.
Ball seat and nuts galvanized.

Sample order:
nlm 27670-1006

Note:
Axial joint suitable for taking up tractive forces. The ball's movement can be controlled or fully locked in position using the clamping nut.

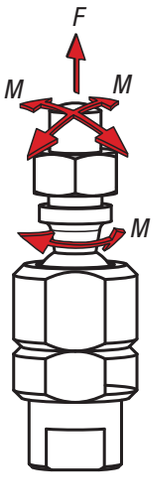

Axial joints for tractive forces

adjustable

Order No.	Form	D1	D2	A	L	L3	E	α	F kN	M Nm	Tightening torque max. Nm
27670-1006	A	10	M6	25	23,5	11	12	20°	2,5	5,2	12,4
27670-1308	A	13	M8	30	29,5	13	16	24°	5	8,8	13,2
27670-1610	A	16	M10	35	36	16	20	28°	7,5	14,5	16,4
27670-1612	A	16	M12	35	36	16	24	28°	7,5	14,5	16,4
27670-21006	B	10	M6	21	23,5	11	12	20°	2,5	5,2	12,4
27670-21308	B	13	M8	26	29,5	13	14	24°	5	8,8	13,2
27670-21610	B	16	M10	35	36	16	16	28°	7,5	14,5	16,4
27670-21612	B	16	M12	35	36	16	16	28°	7,5	14,5	16,4
27670-31006	C	10	M6	21	23,5	-	12	20°	2,5	5,2	12,4
27670-31308	C	13	M8	26	29,5	-	14	24°	5	8,8	13,2
27670-31610	C	16	M10	35	36	-	16	28°	7,5	14,5	16,4
27670-41006	D	10	M6	25	23,5	-	12	20°	2,5	5,2	12,4
27670-41308	D	13	M8	30	29,5	-	16	24°	5	8,8	13,2
27670-41610	D	16	M10	35	36	-	20	28°	7,5	14,5	16,4

Levelling sets

high version

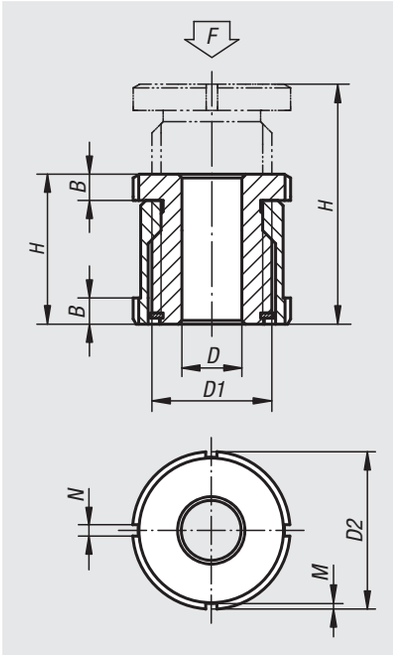

Material:
Steel 1.7225.
Stainless steel 1.4305.

Version:
Standard version zinc galvanised and blue passivated.
Stainless steel version bright.

Sample order:
nlm 27700-01505

Note:
Levelling sets are used for mounting, levelling and aligning motors, aggregates, drive units and assembly lines. They have a large adjustment range of 15 mm to 40 mm. Other sizes available on request.

Order No.	Main material	D	for screw	D1	D2	H min.	H max.	B	N	M	F kN
27700-01504	carbon steel	4,5	M4	M15x1	25	28	43	5	4	2	40
27700-01505	carbon steel	5,5	M5	M15x1	25	28	43	5	4	2	40
27700-01506	carbon steel	6,6	M6	M15x1	25	28	43	5	4	2	40
27700-02006	carbon steel	6,6	M6	M20x1	32	35	55	6	4	2	65
27700-02008	carbon steel	9	M8	M20x1	32	35	55	6	4	2	65
27700-02010	carbon steel	11	M10	M20x1	32	35	55	6	4	2	65
27700-02510	carbon steel	11	M10	M30x1,5	45	42	67	7	5	2	120
27700-02512	carbon steel	13,5	M12	M30x1,5	45	42	67	7	5	2	120
27700-02516	carbon steel	17,5	M16	M30x1,5	45	42	67	7	5	2	120
27700-03216	carbon steel	17,5	M16	M40x1,5	58	54	86	9	6	2,5	210
27700-03220	carbon steel	22	M20	M40x1,5	58	54	86	9	6	2,5	210
27700-03224	carbon steel	26	M24	M40x1,5	58	54	86	9	6	2,5	210
27700-04020	carbon steel	22	M20	M50x1,5	70	66	106	11	6	2,5	330
27700-04024	carbon steel	26	M24	M50x1,5	70	66	106	11	6	2,5	330
27700-04030	carbon steel	33	M30	M50x1,5	70	66	106	11	6	2,5	330
27700-015041	stainless steel	4,5	M4	M15x1	25	28	43	5	4	2	27,1
27700-015051	stainless steel	5,5	M5	M15x1	25	28	43	5	4	2	27,1
27700-015061	stainless steel	6,6	M6	M15x1	25	28	43	5	4	2	27,1
27700-020061	stainless steel	6,6	M6	M20x1	32	35	55	6	4	2	43,4
27700-020081	stainless steel	9	M8	M20x1	32	35	55	6	4	2	43,4
27700-020101	stainless steel	11	M10	M20x1	32	35	55	6	4	2	43,4
27700-025101	stainless steel	11	M10	M30x1,5	45	42	67	7	5	2	84
27700-025121	stainless steel	13,5	M12	M30x1,5	45	42	67	7	5	2	84
27700-025161	stainless steel	17,5	M16	M30x1,5	45	42	67	7	5	2	84
27700-032161	stainless steel	17,5	M16	M40x1,5	58	54	86	9	6	2,5	148
27700-032201	stainless steel	22	M20	M40x1,5	58	54	86	9	6	2,5	148
27700-032241	stainless steel	26	M24	M40x1,5	58	54	86	9	6	2,5	148
27700-040201	stainless steel	22	M20	M50x1,5	70	66	106	11	6	2,5	225
27700-040241	stainless steel	26	M24	M50x1,5	70	66	106	11	6	2,5	225
27700-040301	stainless steel	33	M30	M50x1,5	70	66	106	11	6	2,5	225

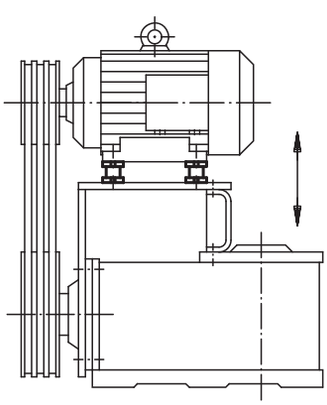

Levelling sets

with locknut

Material:
Steel 1.7225.
Stainless steel 1.4305.

Version:
Standard version zinc galvanised and blue passivated.
Stainless steel version bright.

Sample order:
nlm 27701-01004

Note:
Levelling sets are used for mounting, levelling and aligning motors, aggregates, drive units and assembly lines. The locknut locks the set height. Other sizes available on request.

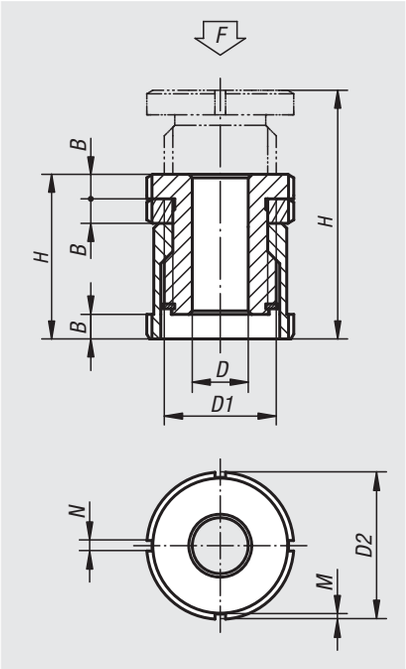

Order No.	Main material	D	for screw	D1	D2	H min.	H max.	B	N	M	F kN
27701-01004	carbon steel	4,5	M4	M15x1	25	33	43	5	4	2	40
27701-01005	carbon steel	5,5	M5	M15x1	25	33	43	5	4	2	40
27701-01006	carbon steel	6,6	M6	M15x1	25	33	43	5	4	2	40
27701-01406	carbon steel	6,6	M6	M20x1	32	41	55	6	4	2	65
27701-01408	carbon steel	9	M8	M20x1	32	41	55	6	4	2	65
27701-01410	carbon steel	11	M10	M20x1	32	41	55	6	4	2	65
27701-01810	carbon steel	11	M10	M30x1,5	45	49	67	7	5	2	120
27701-01812	carbon steel	13,5	M12	M30x1,5	45	49	67	7	5	2	120
27701-01816	carbon steel	17,5	M16	M30x1,5	45	49	67	7	5	2	120
27701-02316	carbon steel	17,5	M16	M40x1,5	58	63	86	9	6	2,5	210
27701-02320	carbon steel	22	M20	M40x1,5	58	63	86	9	6	2,5	210
27701-02324	carbon steel	26	M24	M40x1,5	58	63	86	9	6	2,5	210
27701-02920	carbon steel	22	M20	M50x1,5	70	77	106	11	6	2,5	330
27701-02924	carbon steel	26	M24	M50x1,5	70	77	106	11	6	2,5	330
27701-02930	carbon steel	33	M30	M50x1,5	70	77	106	11	6	2,5	330
27701-010041	stainless steel	4,5	M4	M15x1	25	33	43	5	4	2	27,1
27701-010051	stainless steel	5,5	M5	M15x1	25	33	43	5	4	2	27,1
27701-010061	stainless steel	6,6	M6	M15x1	25	33	43	5	4	2	27,1
27701-014061	stainless steel	6,6	M6	M20x1	32	41	55	6	4	2	43,4
27701-014081	stainless steel	9	M8	M20x1	32	41	55	6	4	2	43,4
27701-014101	stainless steel	11	M10	M20x1	32	41	55	6	4	2	43,4
27701-018101	stainless steel	11	M10	M30x1,5	45	49	67	7	5	2	84
27701-018121	stainless steel	13,5	M12	M30x1,5	45	49	67	7	5	2	84
27701-018161	stainless steel	17,5	M16	M30x1,5	45	49	67	7	5	2	84
27701-023161	stainless steel	17,5	M16	M40x1,5	58	63	86	9	6	2,5	148
27701-023201	stainless steel	22	M20	M40x1,5	58	63	86	9	6	2,5	148
27701-023241	stainless steel	26	M24	M40x1,5	58	63	86	9	6	2,5	148
27701-029201	stainless steel	22	M20	M50x1,5	70	77	106	11	6	2,5	225
27701-029241	stainless steel	26	M24	M50x1,5	70	77	106	11	6	2,5	225
27701-029301	stainless steel	33	M30	M50x1,5	70	77	106	11	6	2,5	225

Levelling sets

low version

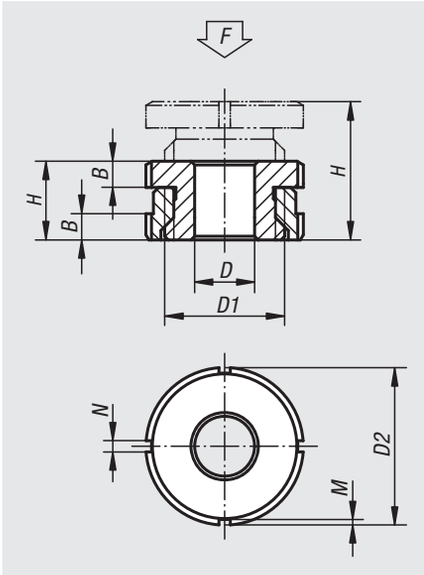

Material:
Steel 1.7225.
Stainless steel 1.4305.

Version:
Standard version zinc galvanised and blue passivated.
Stainless steel version bright.

Sample order:
nlm 27702-0404

Note:
Levelling sets are used for mounting, levelling and aligning motors, aggregates, drive units and assembly lines. This levelling set has an extremely low height. Single levelling sets can be set at several mounting points to achieve a precise and torsion-free alignment.

Order No.	Main material	D	for screw	D1	D2	H min.	H max.	B	N	M	F kN
27702-0404	carbon steel	4,5	M4	M15x1	25	15	19	5	4	2	40
27702-0405	carbon steel	5,5	M5	M15x1	25	15	19	5	4	2	40
27702-0406	carbon steel	6,6	M6	M15x1	25	15	19	5	4	2	40
27702-0506	carbon steel	6,6	M6	M20x1	32	18	23	6	4	2	65
27702-0508	carbon steel	9	M8	M20x1	32	18	23	6	4	2	65
27702-0510	carbon steel	11	M10	M20x1	32	18	23	6	4	2	65
27702-0710	carbon steel	11	M10	M30x1,5	45	22	29	7	5	2	120
27702-0712	carbon steel	13,5	M12	M30x1,5	45	22	29	7	5	2	120
27702-0716	carbon steel	17,5	M16	M30x1,5	45	22	29	7	5	2	120
27702-0916	carbon steel	17,5	M16	M40x1,5	58	28	37	9	6	2,5	210
27702-0920	carbon steel	22	M20	M40x1,5	58	28	37	9	6	2,5	210
27702-0924	carbon steel	26	M24	M40x1,5	58	28	37	9	6	2,5	210
27702-1020	carbon steel	22	M20	M50x1,5	70	33	43	11	6	2,5	330
27702-1024	carbon steel	26	M24	M50x1,5	70	33	43	11	6	2,5	330
27702-1030	carbon steel	33	M30	M50x1,5	70	33	43	11	6	2,5	330
27702-04041	stainless steel	4,5	M4	M15x1	25	15	19	5	4	2	27,1
27702-04051	stainless steel	5,5	M5	M15x1	25	15	19	5	4	2	27,1
27702-04061	stainless steel	6,6	M6	M15x1	25	15	19	5	4	2	27,1
27702-05061	stainless steel	6,6	M6	M20x1	32	18	23	6	4	2	43,4
27702-05081	stainless steel	9	M8	M20x1	32	18	23	6	4	2	43,4
27702-05101	stainless steel	11	M10	M20x1	32	18	23	6	4	2	43,4
27702-07101	stainless steel	11	M10	M30x1,5	45	22	29	7	5	2	84
27702-07121	stainless steel	13,5	M12	M30x1,5	45	22	29	7	5	2	84
27702-07161	stainless steel	17,5	M16	M30x1,5	45	22	29	7	5	2	84
27702-09161	stainless steel	17,5	M16	M40x1,5	58	28	37	9	6	2,5	148
27702-09201	stainless steel	22	M20	M40x1,5	58	28	37	9	6	2,5	148
27702-09241	stainless steel	26	M24	M40x1,5	58	28	37	9	6	2,5	148
27702-10201	stainless steel	22	M20	M50x1,5	70	33	43	11	6	2,5	225
27702-10241	stainless steel	26	M24	M50x1,5	70	33	43	11	6	2,5	225
27702-10301	stainless steel	33	M30	M50x1,5	70	33	43	11	6	2,5	225

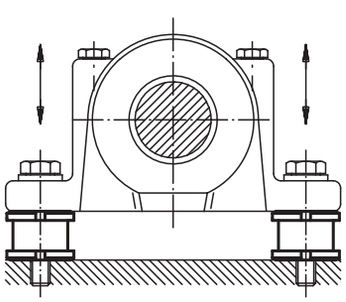

Levelling sets

low version with locknut

Material:
Steel 1.7225.
Stainless steel 1.4305.

Version:
Standard version zinc galvanised and blue passivated.
Stainless steel version bright.

Sample order:
nlm 27703-0404

Note:
These low version levelling sets with locknut are used to mount and align motors, aggregates, drive units and production lines. The advantage is the low height. Alignments can be made quickly and easily even with several levelling points. Distortion-free mounting is guaranteed. The locknut secures a prescribed adjustment.

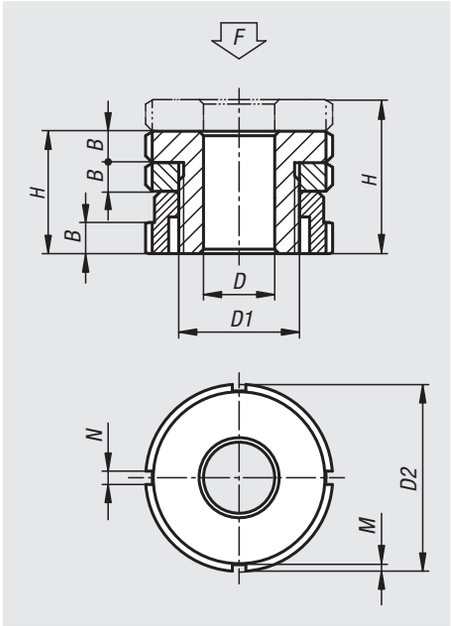

Order No.	Main material	D	for screw	D1	D2	H min.	H max.	B	N	M	F kN
27703-0404	carbon steel	4,5	M4	M15x1	25	20	24	5	4	2	40
27703-0405	carbon steel	5,5	M5	M15x1	25	20	24	5	4	2	40
27703-0406	carbon steel	6,6	M6	M15x1	25	20	24	5	4	2	40
27703-0506	carbon steel	6,6	M6	M20x1	32	24	29	6	4	2	65
27703-0508	carbon steel	9	M8	M20x1	32	24	29	6	4	2	65
27703-0510	carbon steel	11	M10	M20x1	32	24	29	6	4	2	65
27703-0710	carbon steel	11	M10	M30x1,5	45	29	36	7	5	2	120
27703-0712	carbon steel	13,5	M12	M30x1,5	45	29	36	7	5	2	120
27703-0716	carbon steel	17,5	M16	M30x1,5	45	29	36	7	5	2	120
27703-0916	carbon steel	17,5	M16	M40x1,5	58	37	46	9	6	2,5	210
27703-0920	carbon steel	22	M20	M40x1,5	58	37	46	9	6	2,5	210
27703-0924	carbon steel	26	M24	M40x1,5	58	37	46	9	6	2,5	210
27703-1020	carbon steel	22	M20	M50x1,5	70	44	54	11	6	2,5	330
27703-1024	carbon steel	26	M24	M50x1,5	70	44	54	11	6	2,5	330
27703-1030	carbon steel	33	M30	M50x1,5	70	44	54	11	6	2,5	330
27703-04041	stainless steel	4,5	M4	M15x1	25	20	24	5	4	2	27,1
27703-04051	stainless steel	5,5	M5	M15x1	25	20	24	5	4	2	27,1
27703-04061	stainless steel	6,6	M6	M15x1	25	20	24	5	4	2	27,1
27703-05061	stainless steel	6,6	M6	M20x1	32	24	29	6	4	2	43,4
27703-05081	stainless steel	9	M8	M20x1	32	24	29	6	4	2	43,4
27703-05101	stainless steel	11	M10	M20x1	32	24	29	6	4	2	43,4
27703-07101	stainless steel	11	M10	M30x1,5	45	29	36	7	5	2	84
27703-07121	stainless steel	13,5	M12	M30x1,5	45	29	36	7	5	2	84
27703-07161	stainless steel	17,5	M16	M30x1,5	45	29	36	7	5	2	84
27703-09161	stainless steel	17,5	M16	M40x1,5	58	37	46	9	6	2,5	148
27703-09201	stainless steel	22	M20	M40x1,5	58	37	46	9	6	2,5	148
27703-09241	stainless steel	26	M24	M40x1,5	58	37	46	9	6	2,5	148
27703-10201	stainless steel	22	M20	M50x1,5	70	44	54	11	6	2,5	225
27703-10241	stainless steel	26	M24	M50x1,5	70	44	54	11	6	2,5	225
27703-10301	stainless steel	33	M30	M50x1,5	70	44	54	11	6	2,5	225

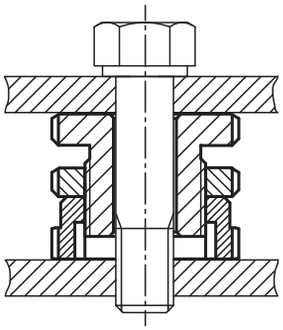

Levelling sets

spherical washer

Material:
Steel 1.7225.
Stainless steel 1.4305.

Version:
Standard version zinc galvanised and blue passivated.
Stainless steel version bright.

Sample order:
nlm 27705-0406

Note:
Levelling sets with spherical washers are used for mounting, levelling and aligning motors, aggregates, drive units and assembly lines. The spherical washer permits exact alignment when mounting sloping surfaces of up to 4°.

Accessories:
Spherical levelling washers 07460

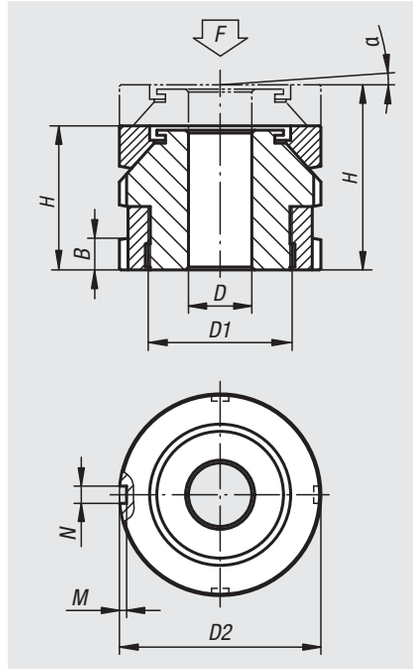

Order No.	Main material	D	for screw	D1	D2	H min.	H max.	B	N	M	α	F kN
27705-0406	carbon steel	6,6	M6	M15x1	25	22	26	5	4	2	4°	40
27705-0506	carbon steel	6,6	M6	M20x1	32	26	31	6	4	2	4°	65
27705-0508	carbon steel	9	M8	M20x1	32	26	31	6	4	2	4°	65
27705-0510	carbon steel	11	M10	M20x1	32	26	31	6	4	2	4°	65
27705-0710	carbon steel	11	M10	M30x1,5	45	34	41	7	5	2	4°	120
27705-0712	carbon steel	13,5	M12	M30x1,5	45	34	41	7	5	2	4°	120
27705-0716	carbon steel	17,5	M16	M30x1,5	45	34	41	7	5	2	4°	120
27705-0916	carbon steel	17,5	M16	M40x1,5	58	44	53	9	6	2,5	4°	210
27705-0920	carbon steel	22	M20	M40x1,5	58	44	53	9	6	2,5	4°	210
27705-0924	carbon steel	26	M24	M40x1,5	58	44	53	9	6	2,5	4°	210
27705-1020	carbon steel	22	M20	M50x1,5	70	50	60	11	6	2,5	4°	330
27705-1024	carbon steel	26	M24	M50x1,5	70	50	60	11	6	2,5	4°	330
27705-1030	carbon steel	33	M30	M50x1,5	70	50	60	11	6	2,5	4°	330
27705-1224	carbon steel	26	M24	M60x2	80	56	68	11	7	3	4°	495
27705-1230	carbon steel	33	M30	M60x2	80	56	68	11	7	3	4°	495
27705-04061	stainless steel	6,6	M6	M15x1	25	22	26	5	4	2	4°	27,1
27705-05061	stainless steel	6,6	M6	M20x1	32	26	31	6	4	2	4°	43,4
27705-05081	stainless steel	9	M8	M20x1	32	26	31	6	4	2	4°	43,4
27705-05101	stainless steel	11	M10	M20x1	32	26	31	6	4	2	4°	43,4
27705-07101	stainless steel	11	M10	M30x1,5	45	34	41	7	5	2	4°	84
27705-07121	stainless steel	13,5	M12	M30x1,5	45	34	41	7	5	2	4°	84
27705-07161	stainless steel	17,5	M16	M30x1,5	45	34	41	7	5	2	4°	84
27705-09161	stainless steel	17,5	M16	M40x1,5	58	44	53	9	6	2,5	4°	148
27705-09201	stainless steel	22	M20	M40x1,5	58	44	53	9	6	2,5	4°	148
27705-09241	stainless steel	26	M24	M40x1,5	58	44	53	9	6	2,5	4°	148
27705-10201	stainless steel	22	M20	M50x1,5	70	50	60	11	6	2,5	4°	225
27705-10241	stainless steel	26	M24	M50x1,5	70	50	60	11	6	2,5	4°	225
27705-10301	stainless steel	33	M30	M50x1,5	70	50	60	11	6	2,5	4°	225
27705-12241	stainless steel	26	M24	M60x2	80	56	68	11	7	3	4°	323
27705-12301	stainless steel	33	M30	M60x2	80	56	68	11	7	3	4°	323

Levelling sets

spherical washer with locknut

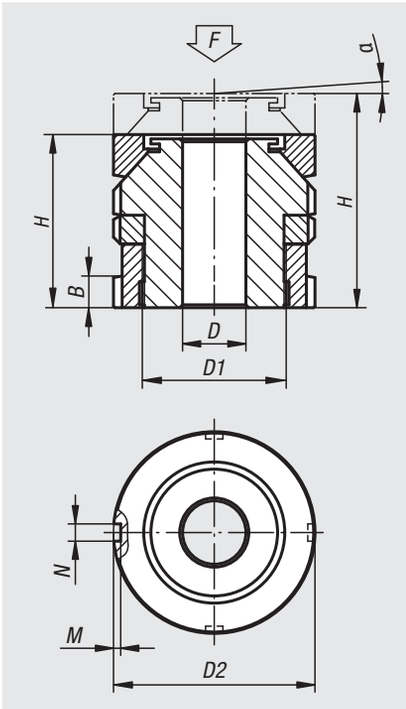

Material:
Steel 1.7225.
Stainless steel 1.4305.

Version:
Standard version zinc galvanised and blue passivated.
Stainless steel version bright.

Sample order:
nlm 27706-0406

Note:
The spherical washer levelling set is used to mount and align motors, aggregates, drive units and production lines. The spherical washer gives exact alignment of sloping faces with an inclination of up to 4°. The locknut secures a prescribed adjustment.

Accessories:
Spherical levelling washers 07460

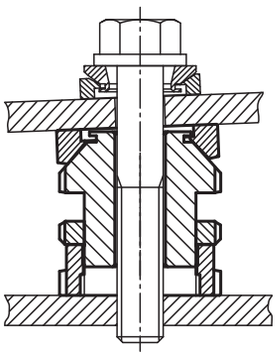

Order No.	Main material	D	for screw	D1	D2	H min.	H max.	B	N	M	α	F kN
27706-0406	carbon steel	6,6	M6	M15x1	25	27	31	5	4	2	4°	40
27706-0506	carbon steel	6,6	M6	M20x1	32	32	37	6	4	2	4°	65
27706-0508	carbon steel	9	M8	M20x1	32	32	37	6	4	2	4°	65
27706-0510	carbon steel	11	M10	M20x1	32	32	37	6	4	2	4°	65
27706-0710	carbon steel	11	M10	M30x1,5	45	41	48	7	5	2	4°	120
27706-0712	carbon steel	13,5	M12	M30x1,5	45	41	48	7	5	2	4°	120
27706-0716	carbon steel	17,5	M16	M30x1,5	45	41	48	7	5	2	4°	120
27706-0916	carbon steel	17,5	M16	M40x1,5	58	53	62	9	6	2,5	4°	210
27706-0920	carbon steel	22	M20	M40x1,5	58	53	62	9	6	2,5	4°	210
27706-0924	carbon steel	26	M24	M40x1,5	58	53	62	9	6	2,5	4°	210
27706-1020	carbon steel	22	M20	M50x1,5	70	61	71	11	6	2,5	4°	330
27706-1024	carbon steel	26	M24	M50x1,5	70	61	71	11	6	2,5	4°	330
27706-1030	carbon steel	33	M30	M50x1,5	70	61	71	11	6	2,5	4°	330
27706-1224	carbon steel	26	M24	M60x2	80	67	79	11	7	3	4°	495
27706-1230	carbon steel	33	M30	M60x2	80	67	79	11	7	3	4°	495
27706-04061	stainless steel	6,6	M6	M15x1	25	27	31	5	4	2	4°	27,1
27706-05061	stainless steel	6,6	M6	M20x1	32	32	37	6	4	2	4°	43,4
27706-05081	stainless steel	9	M8	M20x1	32	32	37	6	4	2	4°	43,4
27706-05101	stainless steel	11	M10	M20x1	32	32	37	6	4	2	4°	43,4
27706-07101	stainless steel	11	M10	M30x1,5	45	41	48	7	5	2	4°	84
27706-07121	stainless steel	13,5	M12	M30x1,5	45	41	48	7	5	2	4°	84
27706-07161	stainless steel	17,5	M16	M30x1,5	45	41	48	7	5	2	4°	84
27706-09161	stainless steel	17,5	M16	M40x1,5	58	53	62	9	6	2,5	4°	148
27706-09201	stainless steel	22	M20	M40x1,5	58	53	62	9	6	2,5	4°	148
27706-09241	stainless steel	26	M24	M40x1,5	58	53	62	9	6	2,5	4°	148
27706-10201	stainless steel	22	M20	M50x1,5	70	61	71	11	6	2,5	4°	225
27706-10241	stainless steel	26	M24	M50x1,5	70	61	71	11	6	2,5	4°	225
27706-10301	stainless steel	33	M30	M50x1,5	70	61	71	11	6	2,5	4°	225
27706-12241	stainless steel	26	M24	M60x2	80	67	79	11	7	3	4°	323
27706-12301	stainless steel	33	M30	M60x2	80	67	79	11	7	3	4°	323

Levelling sets

spherical washer

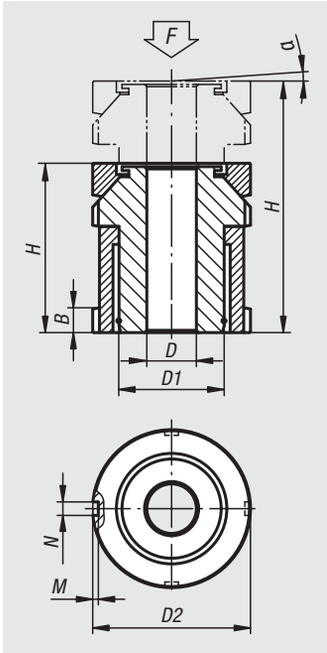

Material:
Steel 1.7225.
Stainless steel 1.4305.

Version:
Standard version zinc galvanised and blue passivated.
Stainless steel version bright.

Sample order:
nlm 27707-1506

Note:
The spherical washer levelling sets are used to mount and align motors, aggregates, drive units and production lines. The spherical washer permits exact alignment when mounting sloping surfaces of up to 4°. These levellers have a long travel of 15 mm to 50 mm.

Accessories:
Spherical levelling washers 07460

Order No.	Main material	D	for screw	D1	D2	H min.	H max.	B	N	M	α	F kN
27707-1506	carbon steel	6,6	M6	M15x1	25	35	50	5	4	2	4°	40
27707-2006	carbon steel	6,6	M6	M20x1	32	43	63	6	4	2	4°	65
27707-2008	carbon steel	9	M8	M20x1	32	43	63	6	4	2	4°	65
27707-2010	carbon steel	11	M10	M20x1	32	43	63	6	4	2	4°	65
27707-2510	carbon steel	11	M10	M30x1,5	45	54	79	7	5	2	4°	120
27707-2512	carbon steel	13,5	M12	M30x1,5	45	54	79	7	5	2	4°	120
27707-2516	carbon steel	17,5	M16	M30x1,5	45	54	79	7	5	2	4°	120
27707-3216	carbon steel	17,5	M16	M40x1,5	58	70	102	9	6	2,5	4°	210
27707-3220	carbon steel	22	M20	M40x1,5	58	70	102	9	6	2,5	4°	210
27707-3224	carbon steel	26	M24	M40x1,5	58	70	102	9	6	2,5	4°	210
27707-4020	carbon steel	22	M20	M50x1,5	70	83	123	11	6	2,5	4°	330
27707-4024	carbon steel	26	M24	M50x1,5	70	83	123	11	6	2,5	4°	330
27707-4030	carbon steel	33	M30	M50x1,5	70	83	123	11	6	2,5	4°	330
27707-5024	carbon steel	26	M24	M60x2	80	94	144	11	7	3	4°	495
27707-5030	carbon steel	33	M30	M60x2	80	94	144	11	7	3	4°	495
27707-15061	stainless steel	6,6	M6	M15x1	25	35	50	5	4	2	4°	27,1
27707-20061	stainless steel	6,6	M6	M20x1	32	43	63	6	4	2	4°	43,4
27707-20081	stainless steel	9	M8	M20x1	32	43	63	6	4	2	4°	43,4
27707-20101	stainless steel	11	M10	M20x1	32	43	63	6	4	2	4°	43,4
27707-25101	stainless steel	11	M10	M30x1,5	45	54	79	7	5	2	4°	84
27707-25121	stainless steel	13,5	M12	M30x1,5	45	54	79	7	5	2	4°	84
27707-25161	stainless steel	17,5	M16	M30x1,5	45	54	79	7	5	2	4°	84
27707-32161	stainless steel	17,5	M16	M40x1,5	58	70	102	9	6	2,5	4°	148
27707-32201	stainless steel	22	M20	M40x1,5	58	70	102	9	6	2,5	4°	148
27707-32241	stainless steel	26	M24	M40x1,5	58	70	102	9	6	2,5	4°	148
27707-40201	stainless steel	22	M20	M50x1,5	70	83	123	11	6	2,5	4°	225
27707-40241	stainless steel	26	M24	M50x1,5	70	83	123	11	6	2,5	4°	225
27707-40301	stainless steel	33	M30	M50x1,5	70	83	123	11	6	2,5	4°	225
27707-50241	stainless steel	26	M24	M60x2	80	94	144	11	7	3	4°	323
27707-50301	stainless steel	33	M30	M60x2	80	94	144	11	7	3	4°	323

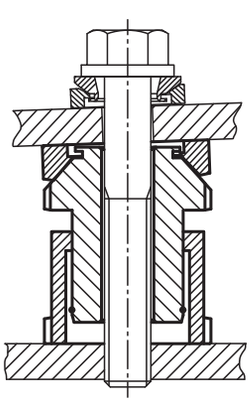

Levelling sets

spherical washer with locknut

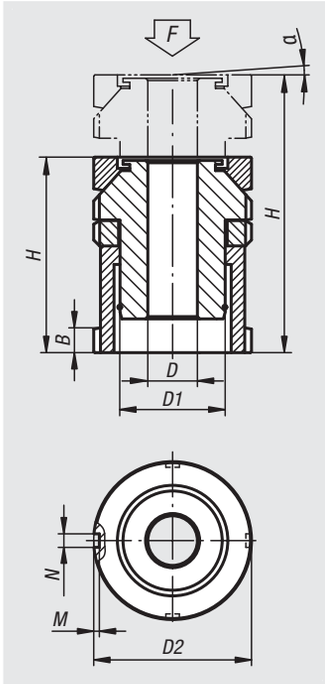

Material:
Steel 1.7225.
Stainless steel 1.4305.

Version:
Standard version zinc galvanised and blue passivated.
Stainless steel version bright.

Sample order:
nlm 27708-1006

Note:
The spherical washer levelling sets are used to mount and align motors, aggregates, drive units and production lines. The spherical washer permits exact alignment when mounting sloping surfaces of up to 4°. The locknut secures a prescribed adjustment. These levellers have a long travel of 10 mm to 39 mm.

Accessories:
Spherical levelling washers 07460

Order No.	Main material	D	for screw	D1	D2	H min.	H max.	B	N	M	α	F kN
27708-1006	carbon steel	6,6	M6	M15x1	25	40	50	5	4	2	4°	40
27708-1406	carbon steel	6,6	M6	M20x1	32	49	63	6	4	2	4°	65
27708-1408	carbon steel	9	M8	M20x1	32	49	63	6	4	2	4°	65
27708-1410	carbon steel	11	M10	M20x1	32	49	63	6	4	2	4°	65
27708-1810	carbon steel	11	M10	M30x1,5	45	61	79	7	5	2	4°	120
27708-1812	carbon steel	13,5	M12	M30x1,5	45	61	79	7	5	2	4°	120
27708-1816	carbon steel	17,5	M16	M30x1,5	45	61	79	7	5	2	4°	120
27708-2316	carbon steel	17,5	M16	M40x1,5	58	79	102	9	6	2,5	4°	210
27708-2320	carbon steel	22	M20	M40x1,5	58	79	102	9	6	2,5	4°	210
27708-2324	carbon steel	26	M24	M40x1,5	58	79	102	9	6	2,5	4°	210
27708-2920	carbon steel	22	M20	M50x1,5	70	94	123	11	6	2,5	4°	330
27708-2924	carbon steel	26	M24	M50x1,5	70	94	123	11	6	2,5	4°	330
27708-2930	carbon steel	33	M30	M50x1,5	70	94	123	11	6	2,5	4°	330
27708-3924	carbon steel	26	M24	M60x2	80	105	144	11	7	3	4°	495
27708-3930	carbon steel	33	M30	M60x2	80	105	144	11	7	3	4°	495
27708-10061	stainless steel	6,6	M6	M15x1	25	40	50	5	4	2	4°	27,1
27708-14061	stainless steel	6,6	M6	M20x1	32	49	63	6	4	2	4°	43,4
27708-14081	stainless steel	9	M8	M20x1	32	49	63	6	4	2	4°	43,4
27708-14101	stainless steel	11	M10	M20x1	32	49	63	6	4	2	4°	43,4
27708-18101	stainless steel	11	M10	M30x1,5	45	61	79	7	5	2	4°	84
27708-18121	stainless steel	13,5	M12	M30x1,5	45	61	79	7	5	2	4°	84
27708-18161	stainless steel	17,5	M16	M30x1,5	45	61	79	7	5	2	4°	84
27708-23161	stainless steel	17,5	M16	M40x1,5	58	79	102	9	6	2,5	4°	148
27708-23201	stainless steel	22	M20	M40x1,5	58	79	102	9	6	2,5	4°	148
27708-23241	stainless steel	26	M24	M40x1,5	58	79	102	9	6	2,5	4°	148
27708-29201	stainless steel	22	M20	M50x1,5	70	94	123	11	6	2,5	4°	225
27708-29241	stainless steel	26	M24	M50x1,5	70	94	123	11	6	2,5	4°	225
27708-29301	stainless steel	33	M30	M50x1,5	70	94	123	11	6	2,5	4°	225
27708-39241	stainless steel	26	M24	M60x2	80	105	144	11	7	3	4°	323
27708-39301	stainless steel	33	M30	M60x2	80	105	144	11	7	3	4°	323

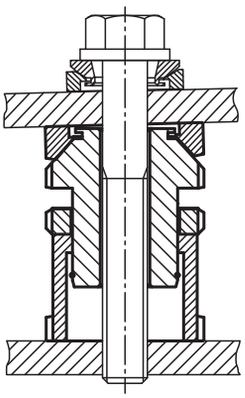

Cup elements

type H2

Material:
Metal parts, steel, grade 5.6.
Natural rubber, hardness Shore 40 or 60 A.

Version:
Steel galvanized.

Sample order:
nlm 27750-03502040

Note:
The cup elements are highly elastic both in radial and in axial direction and therefore offer an outstanding impact isolation.
The special shaping of the cup elements allows isolation of sound and vibrations of machines and assemblies with a low natural frequency. They are especially suitable for supporting sensitive instruments and small devices.

The elements must not be subjected to tensile stress.

Temperature range:
-30°C to +80°C.

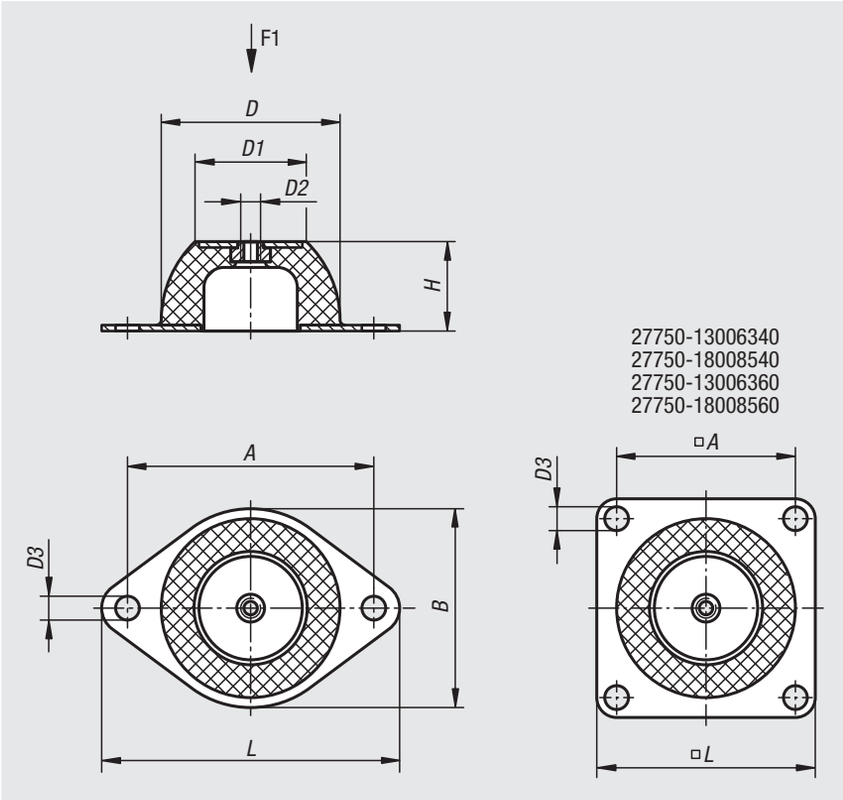

Order No.	Version	A	B	D	D1	D2	D3	H	L	F1 N
27750-03502040	hardness Shore 40A	50	43	35	18	M6	7	20	64	34
27750-05002540	hardness Shore 40A	66	56	50	33	M8	8	25	85	200
27750-07003540	hardness Shore 40A	92	76	70	45	M10	10	35	114	390
27750-08504040	hardness Shore 40A	110	96	85	53	M10	11,5	40	136	680
27750-09004540	hardness Shore 40A	124	101	90	58	M10	11,5	45	151	1280
27750-13006340	hardness Shore 40A	120	-	130	78	M12	14,5	63	150	2700
27750-18008540	hardness Shore 40A	160	-	180	100	M16	14,5	85	200	3700
27750-03502060	hardness Shore 60A	50	43	35	18	M6	7	20	64	90
27750-05002560	hardness Shore 60A	66	56	50	33	M8	8	25	85	490
27750-07003560	hardness Shore 60A	92	76	70	45	M10	10	35	114	780
27750-08504060	hardness Shore 60A	110	96	85	53	M10	11,5	40	136	1450
27750-09004560	hardness Shore 60A	124	101	90	58	M10	11,5	45	151	2150
27750-13006360	hardness Shore 60A	120	-	130	78	M12	14,5	63	150	4900
27750-18008560	hardness Shore 60A	160	-	180	100	M16	14,5	85	200	7350

Machine feet

Material:
Metal parts, steel grade 5.6.
Elastomer, natural rubber,
medium hardness, Shore 60.

Version:
Steel galvanized.

Sample order:
nlm 27760-062060

Note:
These machine feet have proven themselves to be universally applicable elements for the elastic support of all types of machine. They are commonly used wherever large horizontal movements are to be avoided. The horizontal rigidity is higher in all directions than the vertical rigidity. If used correctly they are excellent at preventing the transfer of vibration and noise.

Machine feet with shear protection are available for situations where tensile forces are to be expected.

The indicated load data are reference values for static loads by rubber hardness of Shore 60A.

On request:
Rubber hardness Shore 40 or 70 A.

Drawing reference:
1) With shear protection

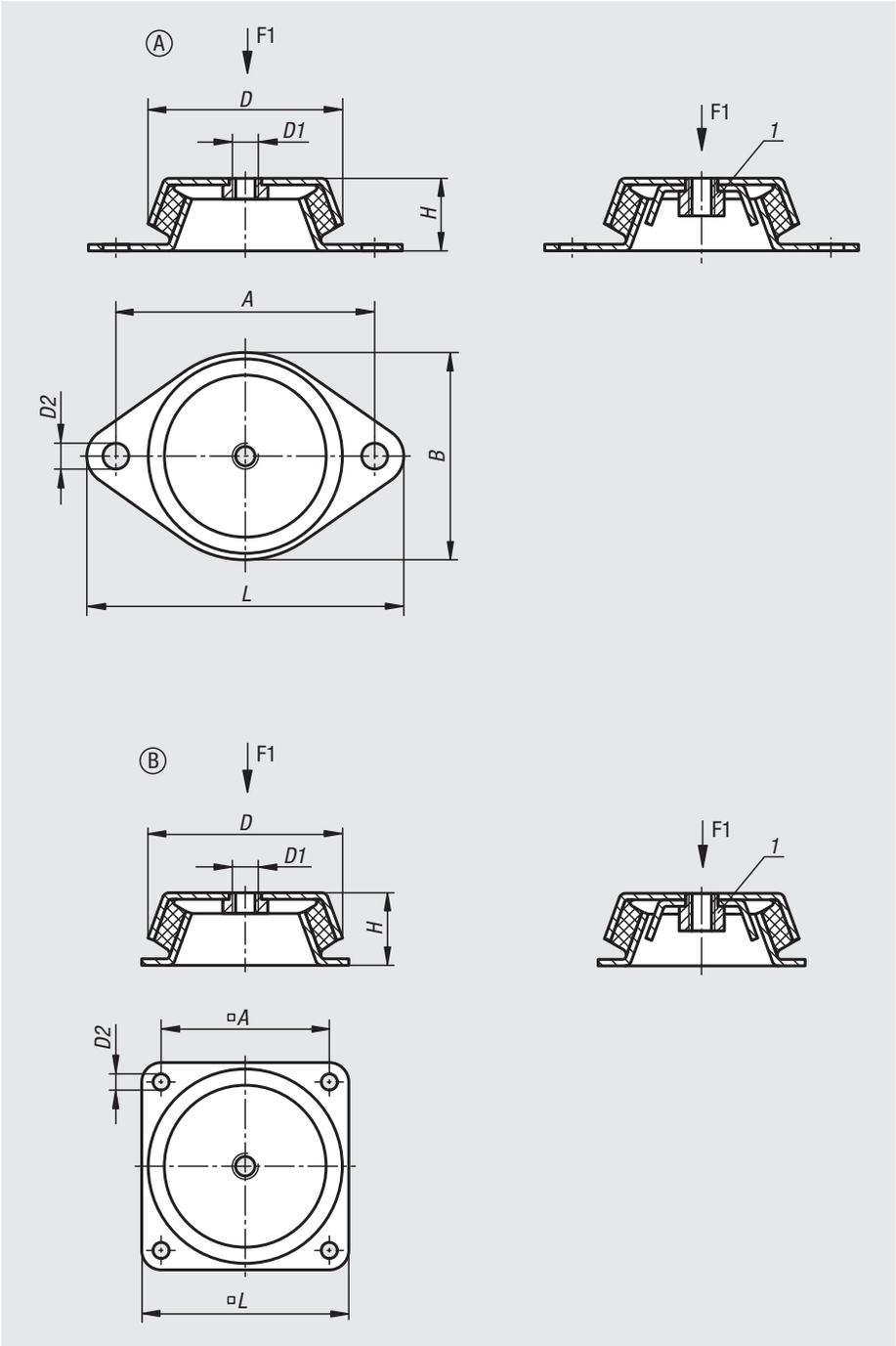

Order No. without shear protection	Order No. with shear protection	Form	A	B	D	D1	D2	H	L	F1 N
27760-062060	**27760-062160**	A	85	66	62	M10	8,2	30	110	1500
27760-078060	**27760-078160**	A	110	78	78	M10	9	30	128	1800
27760-092060	**27760-092160**	A	110	96	86	M12	10,2	45	140	3000
27760-106060	**27760-106160**	A	140	110	106	M12	12,4	39	170	3600
27760-150060	**27760-150160**	B	132	-	150	M16	12,5	51	168	8000

Modular structure of a swivel foot

Application:
Swivel feet are of modular design. The components can be individually combined to match the application. The swivel feet are applicable for use on machines, plants and even office furniture.

Modular design:
Swivel feet consist of two components - a plate and a threaded spindle or ball joint. **Any** plate can be combined with **any** threaded spindle or ball joint (see Fig. 1).

Assembly:
Using a plastic hammer, knock the ball of the threaded spindle or ball joint vertically into the swivel foot plate. If necessary, the two fastening holes (closed) in the swivel foot plate can be opened by simply punching them out to allow the swivel foot to be fastened to a base.

Height of swivel foot:
Swivel feet always have a minimum height of H = 22.5 mm independently of the plate, threaded spindle or ball joint size (see Fig. 2). When assembling with threaded spindle, the height of the complete swivel foot is calculated by adding 22.5 mm to the length of the threaded spindle + the height of the hexagon. (Total height of swivel foot = L + L1 + 22.5 mm).

When assembling with ball joint, the length L is void.

Note for ordering:
If the swivel foot plate and the threaded spindle or ball joint are to be supplied assembled, please add the suffix **"assembled"** to the order number for the plate and the spindle or ball joint (see sample order on the relevant product page).

Fig. 1

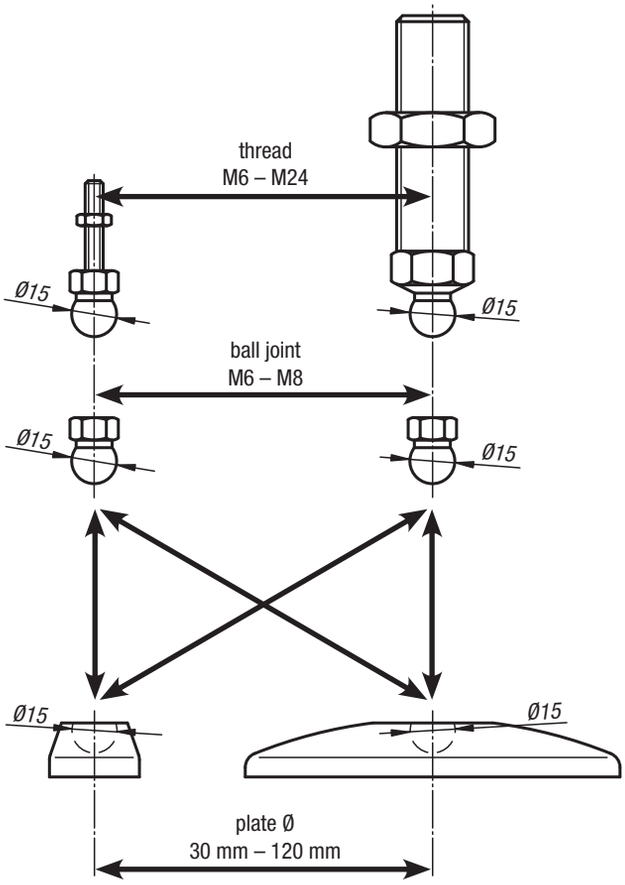

Fig. 2

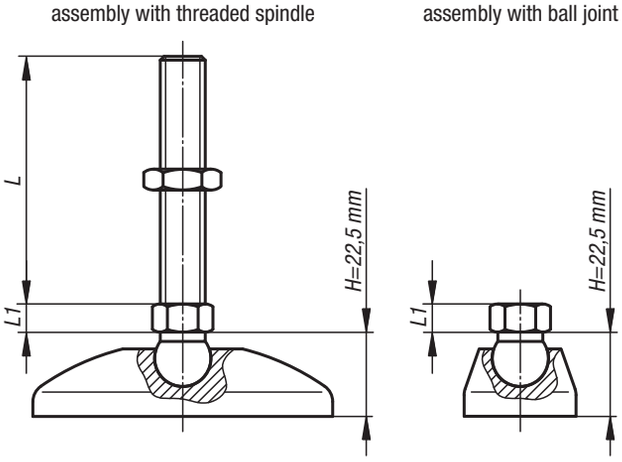

Inclination angle of threaded spindle or ball joint:

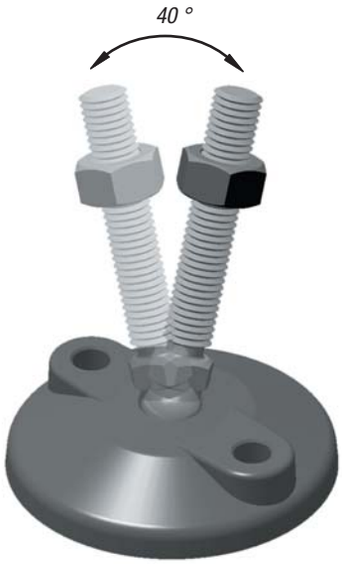

Swivel feet plates

plastic

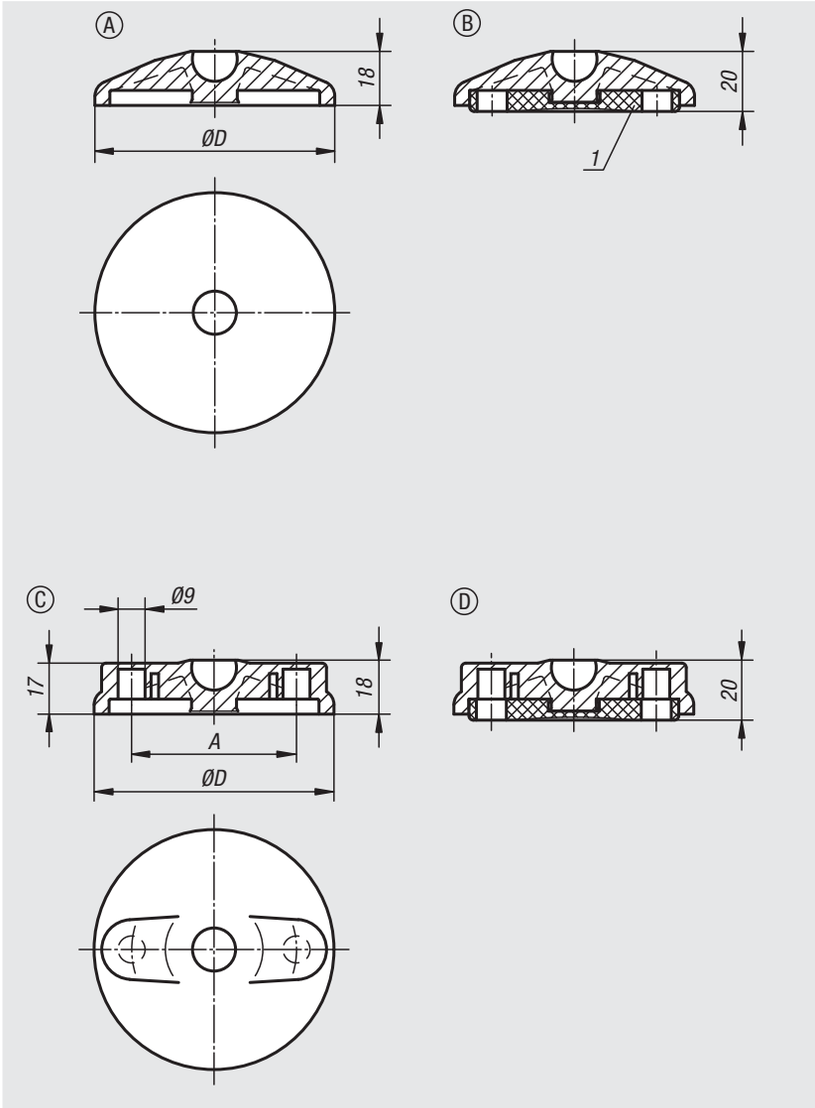

Material:
Plates, thermoplastic, glass bead reinforced.
Anti-slip plate thermoplastic elastomer.

Version:
black.

Sample order:
nlm 27800-1030
nlm 27800-1030 and 27810-060151 **assembled**

Note for ordering:
If the swivel foot plate and the threaded spindle or ball joint are to be supplied assembled, please add the suffix **"assembled"** to the order number for the plate and the spindle or ball joint. (e.g. 27800-1030 and 27810-060151 **assembled**.)

Note:
Swivel feet consist of a plate and a threaded spindle or ball joint. Any plate can be combined with any threaded spindle or ball joint. The anti-slip plate absorbs vibrations and prevents the swivel foot slipping.
For matching threaded spindles see 27810.
For matching ball joints see 27811.

Drawing reference:
1) From plate Ø 80
Form A without screw-on hole, without anti-slip plate
Form B without screw-on hole, with anti-slip plate
Form C with screw-on hole (closed), without anti-slip plate
Form D with screw-on hole (closed), with anti-slip plate

Order No. Form A	Order No. Form B	D	Load rating max. kN
27800-1030	**27800-2030**	30	5
27800-1040	**27800-2040**	40	9
27800-1045	**27800-2045**	45	9
27800-1050	**27800-2050**	50	9
27800-1060	**27800-2060**	60	9
27800-1080	**27800-2080**	80	9
27800-1100	**27800-2100**	100	9

Order No. Form C	Order No. Form D	D	A	Load rating max. kN
27800-3080	**27800-4080**	80	55	9
27800-3100	**27800-4100**	100	74	9
27800-3120	**27800-4120**	120	94	9

Swivel feet plates antistatic

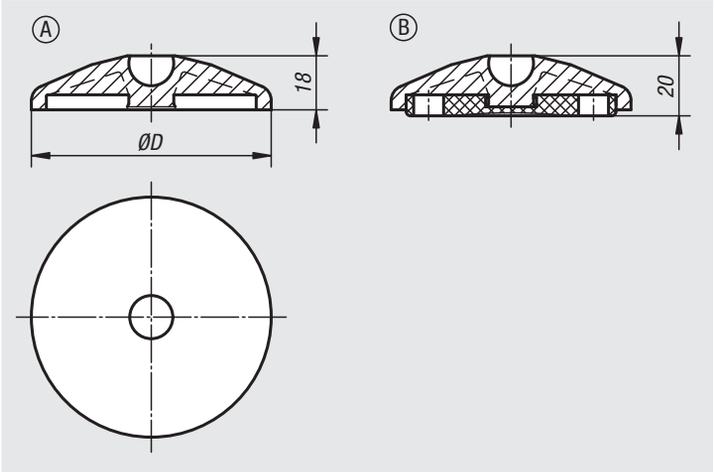

Material:
Plates, thermoplastic, glass bead reinforced.
Anti-slip plate thermoplastic elastomer.

Version:
black.

Sample order:
nlm 27800-11040

Note for ordering:
If the swivel foot plate and the threaded spindle or ball joint are to be supplied assembled, please add the suffix **"assembled"** to the order number for the plate and the spindle or ball joint. (e.g. 27800-1030 and 27810-060151 **assembled**.)

Note:
Swivel feet consist of a plate and a threaded spindle or ball joint. Any plate can be combined with any threaded spindle or ball joint. The anti-slip plate absorbs vibrations and prevents the swivel foot slipping.
For matching threaded spindles see 27810.
For matching ball joints see 27811.

Safety:
These ESD products can also be used for devices, components and protection systems in areas with high risk of explosion.
Use of these ESD products prevents the occurrence of electrostatic spark discharges, eliminating the potential ignition of gases and dusts which could lead to explosions in enclosed spaces.
Manufacturers and operators must use and conform to ATEX directives for the protection of persons working in areas with high risk of explosion.
These ESD products are certified by TÜV-Süd in relation to their electrical discharge capability.

Target groups:
Device manufacturers required to conform to ATEX product directive 2014/34/EU.
Operators required to conform to ATEX worker protection directive 1999/92/EC.

Drawing reference:
Form A without screw-on hole, without anti-slip plate
Form B without screw-on hole, with anti-slip plate

Order No.	Form	D	Load rating max. kN
27800-11040	A	40	9
27800-11050	A	50	9
27800-11060	A	60	9
27800-12040	B	40	9
27800-12050	B	50	9
27800-12060	B	60	9

Notes

Swivel feet plates

die-cast zinc or stainless steel

Material:
Plate die-cast zinc or stainless steel 1.4305.
Anti-slip plate thermoplastic elastomer.

Version:
Die-cast zinc plate, black powder-coated.
Stainless steel plate, bright.

Sample order:
nlm 27801-10301
nlm 27801-10301 and 27810-060151 **assembled**

Note for ordering:
If the swivel foot plate and the threaded spindle or ball joint are to be supplied assembled, please add the suffix **"assembled"** to the order number for the plate and the spindle or ball joint. (e.g. 27801-10301 and 27810-060151 **assembled**).

Note:
Swivel feet consist of a plate and a threaded spindle or ball joint. Any plate can be combined with any threaded spindle or ball joint. The anti-slip plate absorbs vibrations and prevents the swivel foot slipping.
For matching threaded spindles see 27810.
For matching ball joints see 27811.

Drawing reference:
1) From plate Ø 80
Form A without screw-on hole, without anti-slip plate
Form B without screw-on hole, with anti-slip plate
Form C with screw-on hole (open), without anti-slip plate
Form D with screw-on hole (open), with anti-slip plate

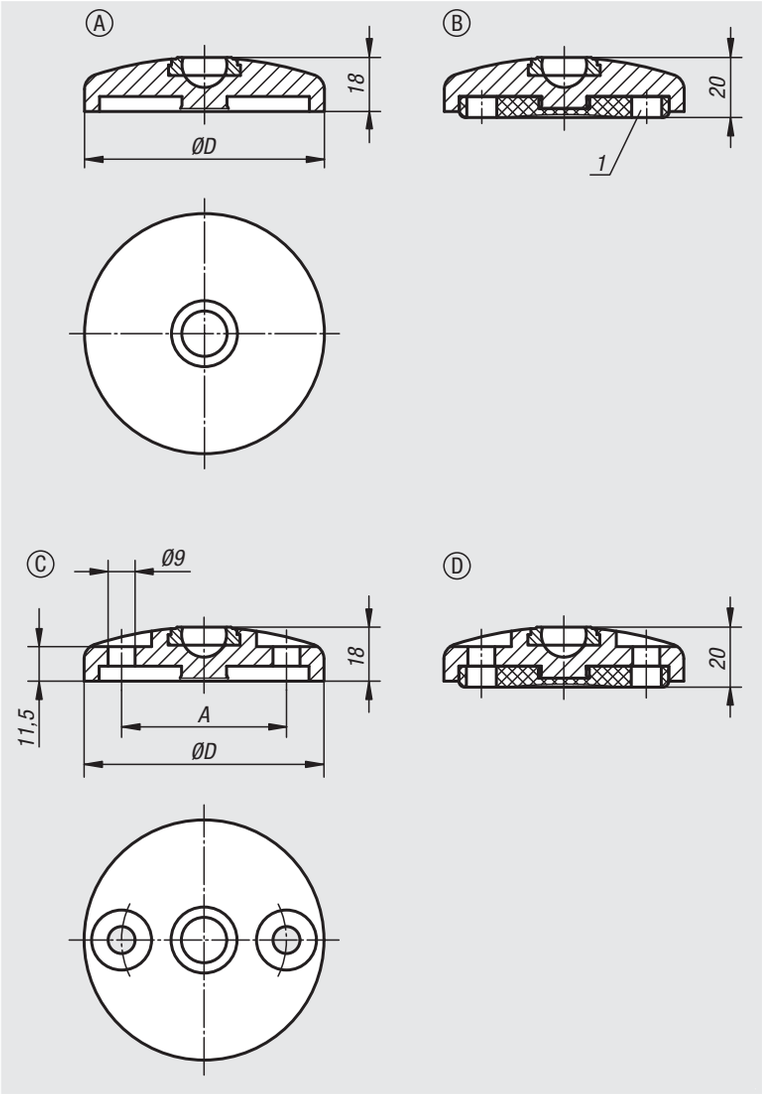

Swivel feet plates

die-cast zinc or stainless steel

Order No. Form A	Order No. Form B	Main material	D	Load rating max. kN
27801-10301	27801-20301	zinc	30	20
27801-10401	27801-20401	zinc	40	30
27801-10451	27801-20451	zinc	45	30
27801-10501	27801-20501	zinc	50	30
27801-10601	27801-20601	zinc	60	30
27801-10801	27801-20801	zinc	80	30
27801-11001	27801-21001	zinc	100	35
27801-11201	27801-21201	zinc	120	35

Order No. Form C	Order No. Form D	Main material	D	A	Load rating max. kN
27801-30801	27801-40801	zinc	80	55	30
27801-31001	27801-41001	zinc	100	74	35
27801-31201	27801-41201	zinc	120	94	35

Order No. Form A	Order No. Form B	Main material	D	Load rating max. kN
27801-10302	27801-20302	stainless steel	30	20
27801-10402	27801-20402	stainless steel	40	30
27801-10452	27801-20452	stainless steel	45	30
27801-10502	27801-20502	stainless steel	50	35
27801-10602	27801-20602	stainless steel	60	35
27801-10802	27801-20802	stainless steel	80	35
27801-11002	27801-21002	stainless steel	100	40
27801-11202	27801-21202	stainless steel	120	40

Order No. Form C	Order No. Form D	Main material	D	A	Load rating max. kN
27801-30802	27801-40802	stainless steel	80	55	35
27801-31002	27801-41002	stainless steel	100	74	40
27801-31202	27801-41202	stainless steel	120	94	40

Swivel feet plates extended

die-cast zinc

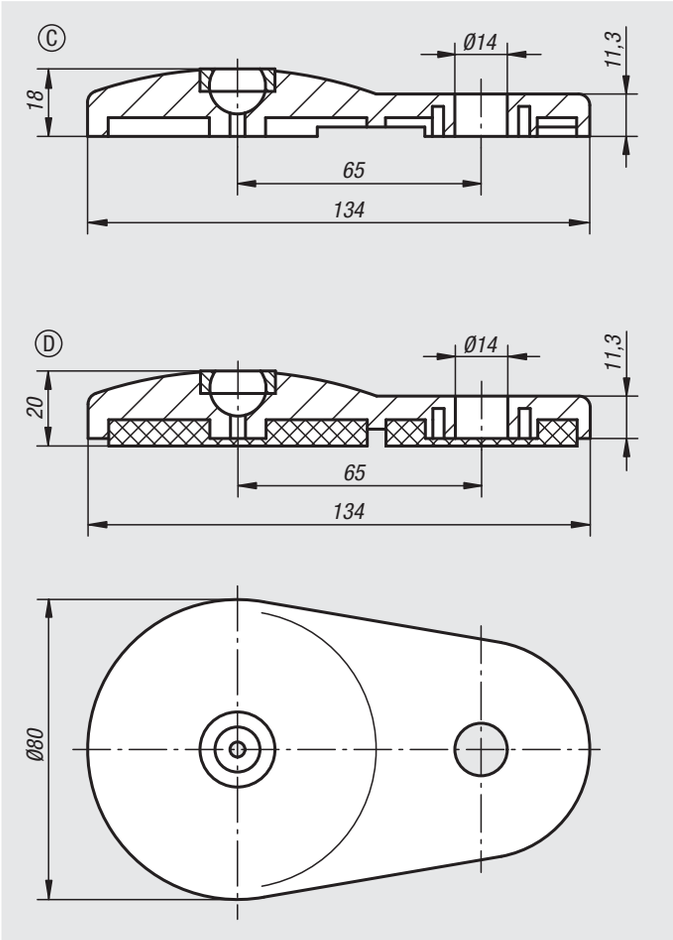

Material:
Plate die-cast zinc.
Anti-slip plate thermoplastic elastomer.

Version:
Plate black powder-coated.

Sample order:
nlm 27802-30801
nlm 27802-30801 and 27810-060151 **assembled**

Note for ordering:
If the swivel foot plate and the threaded spindle or ball joint are to be supplied assembled, please add the suffix **"assembled"** to the order number for the plate and the spindle or ball joint. (e.g. 27802-30801 and 27810-060151 **assembled**.)

Note:
Swivel feet consist of a plate and a threaded spindle or ball joint. Any plate can be combined with any threaded spindle or ball joint. The anti-slip plate absorbs vibrations and prevents the swivel foot slipping.
For matching threaded spindles see 27810.
For matching ball joints see 27811.

Drawing reference:
Form C with screw-on hole, without anti-slip plate
Form D with screw-on hole, with anti-slip plate

Order No.	Form	Load rating max. kN
27802-30801	C	30
27802-40801	D	30

Swivel feet plates

stainless steel

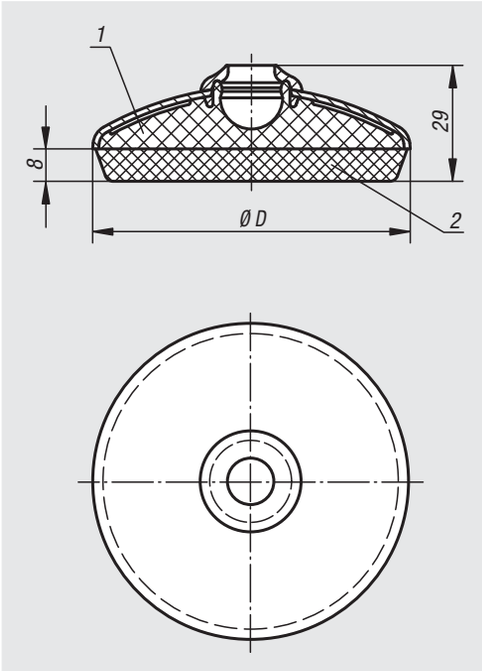

Material:
Plates, stainless steel 1.4301.
Core, thermoplastic PA.
Rubber support TPE.

Version:
Plate bright.
Rubber support light grey with sealing lip, hardness 70 Shore A.
Temp. range -20°C to +100°C.

Sample order:
nlm 27803-1060
nlm 27803-1060 and 27810-060152 **assembled**

Note for ordering:
If the swivel foot plate and the threaded spindle or ball joint are to be supplied assembled, please add the suffix **"assembled"** to the order number for the plate and the spindle or ball joint. (e.g. 27803-1060 and 27810-060152 **assembled**).

Note:
The rubber support is joined with the stainless steel plate and the PA core by injection moulding. The rubber support is resistant to oil and water (up to 60 °C). In addition, it is furnished with antibacterial and antimicrobial protection and is thus outstandingly suited for sectors in the foods industry.

Swivel feet consist of a plate and a threaded spindle or ball joint. Any plate can be combined with any threaded spindle or ball joint.
For matching threaded spindles see 27810.
For matching ball joints see 27811.

Drawing reference:
1) PA-core
2) rubber base

Order No.	D	Load rating max. kN
27803-1060	58,5	7
27803-1080	78,5	7
27803-1100	98,5	7

Technical information
Swivel feet and plates with vibration absorption

Natural frequency:
Every sprung weight, such as a machine or piece of equipment, that is standing on swivel feet with vibration absorbers vibrates after an initial impetus at its own natural frequency (resonance frequency). In the diagram to the side (Fig. 1) the natural frequency of Sylomer V12 under pressure by various forces can be read. The optimum range of use is with a pressure of ≤ 0.4 N/mm. A maximum pressure of 0.6 N/mm should not be exceeded.

Interference frequency:
The frequency emitted by a machine or a piece of equipment is known as its interference frequency. Effective vibration absorption is dependent on the interference frequency (the frequency to be absorbed) and the natural frequecy of the absorption unit. The greater the difference in frequency between the natural frequency and the interference frequency, the better the absorption. An absorbing effect will only be achieved if the interference frequency is over √2 times the natural frequency of the absorption unit.

Fig. 1

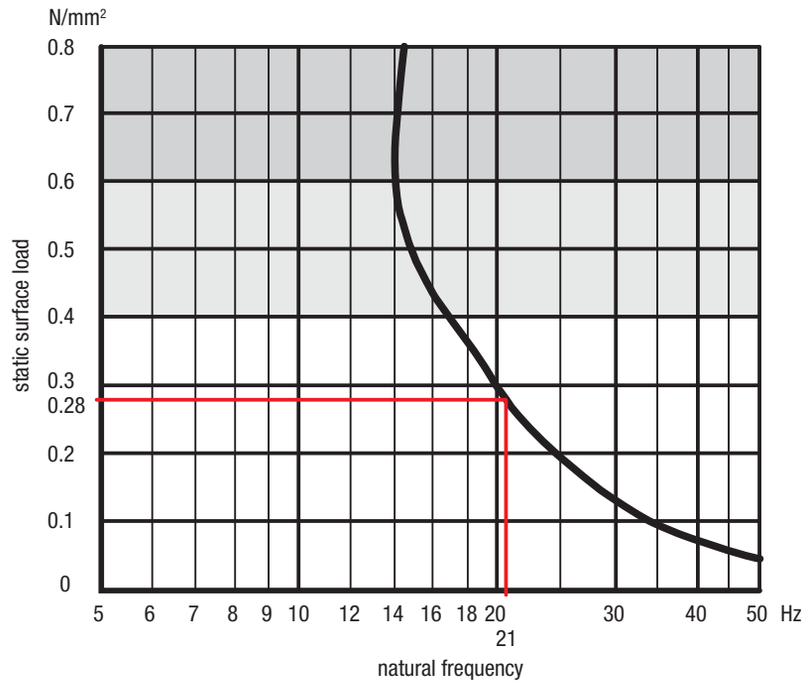

Calculation example:

Swivel foot: M12, D1=30,5
Loading: 300N

Pressure: $\frac{F}{A} = \frac{300\ N}{529{,}5\ mm^2} = 0{,}57\ N/mm^2$

$> 0{,}4\ N/mm^2$

Swivel foot: M16, D1=40,5
Loading: 300N

Pressure: $\frac{F}{A} = \frac{300\ N}{1087{,}2\ mm^2} = \mathbf{0{,}28\ N/mm^2}$

$< 0{,}4\ N/mm^2$

The M16 swivel foot is chosen since the pressure is ≤ 0.4 N/mm².
From Fig. 1, a pressure of **0.28 N/mm²** gives a natural frequency of **21 Hz**.
With an interference frequency of **44 Hz** an absorption effect of 69% is achieved (Fig. 2).

Fig. 2

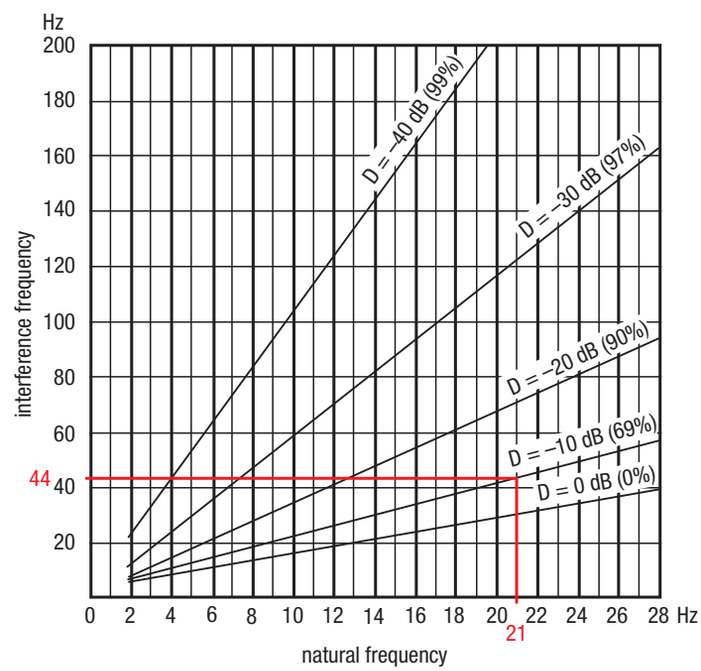

Swivel feet plates

with vibration absorption

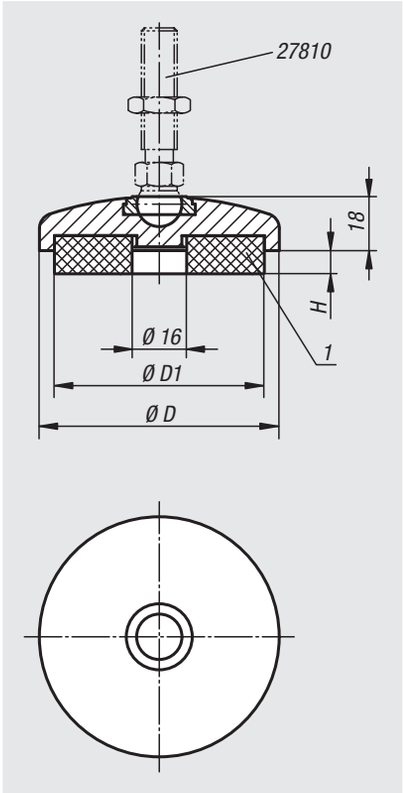

Material:
Plate die-cast zinc or stainless steel 1.4305.
Damper plate PUR elastomere (Sylomer V12).

Version:
Die-cast zinc plate, black powder-coated.
Stainless steel plate, bright.
Damper plate, grey, glued in, anti-slip.
Temp. range -30 °C to +70 °C.

Sample order:
nlm 27804-20601
nlm 27804-20601 and 27810-060151 **assembled**

Note for ordering:
If the swivel foot plate and the threaded spindle or ball joint are to be supplied assembled, please add the suffix **"assembled"** to the order number for the plate and the spindle or ball joint. (e.g. 27804-20601 and 27810-060151 **assembled**.)

Note:
The load rating given in the table is a recommendation of the **permanent static** load up to which the absorption unit should be used. This static load corresponds to a pressure per area of 0.4 N/mm², at which the material achieves its optimum absorption properties. Here it is taken into account that under dynamic demands an additional load, up to 0.6 N/mm² may occur. The damper plate absorbs vibrations and prevents the swivel foot slipping. Swivel feet consist of a plate and a threaded spindle or ball joint. Any plate can be combined with any threaded spindle or ball joint.
For matching threaded spindles see 27810.
For matching ball joints see 27811.

Drawing reference:
1) damper plate

Order No.	Main material	D	D1	H by 0 / 0.4 / 0.6 N/mm²	Load rating N (by 0.4 N/mm²)
27804-20401	zinc	40	30,5	7 / 5,9 / 4,8	62
27804-20501	zinc	50	40,5	7 / 5,9 / 4,8	212
27804-20601	zinc	60	50	7 / 5,9 / 4,8	433
27804-20801	zinc	80	68	7 / 5,9 / 4,8	614
27804-20402	stainless steel	40	30,5	7 / 5,8 / 4,9	212
27804-20502	stainless steel	50	40,5	7 / 5,8 / 4,9	435
27804-20602	stainless steel	60	50	7 / 5,8 / 4,9	705
27804-20802	stainless steel	80	68	7 / 5,8 / 4,9	1372

Swivel feet

with vibration absorption

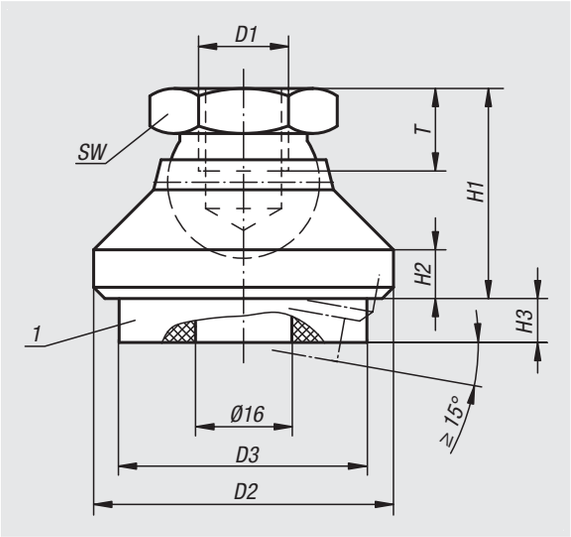

Material:
Steel version:
Thrust plate carbon steel.
Ball element free-cutting steel.
Stainless steel version:
Thrust plate and ball element stainless steel.

Damper plate PUR elastomere (Sylomer V12).

Version:
Steel version:
Thrust plate black oxidised.
Ball element case-hardened, black oxidised.

Stainless steel version:
bright.

Damper plate grey, glued in, anti-slip.
Temp. range -30 °C to +70 °C.

Sample order:
nlm 27806-110

Note:
The load rating given in the table is a recommendation of the **permanent static** load to which the damping element should be used.
This static load corresponds to a surface pressure of 0.4 N/mm² at which the material achieves its optimum absorption properties. It is taken into account that under dynamic loading an additional load of up to 0.6 N/mm² may occur.
The damper plate absorbs vibrations and prevents the swivel foot slipping.

For swivel feet without vibration absorption see article No. 07144.

Drawing reference:
1) damper plate

Order No.	Main material	D1	D2	D3	H1	H2	H3 by 0 / 0.4 / 0.6 N/mm²	T	SW	Load rating N (by 0.4 N/mm²)
27806-110	steel	M10	32	30,5	22	5	8 / 6,8 / 5,9	10	17	212
27806-112	steel	M12	40	30,5	26	6	8 / 6,8 / 5,9	12	19	212
27806-116	steel	M16	50	40,5	32	7	8 / 6,8 / 5,9	14	24	435
27806-120	steel	M20	60	50	42	8	8 / 6,8 / 5,9	18	30	705
27806-310	stainless steel	M10	32	30,5	22	5	8 / 6,8 / 5,9	10	17	212
27806-312	stainless steel	M12	40	30,5	26	6	8 / 6,8 / 5,9	12	19	212
27806-316	stainless steel	M16	50	40,5	32	7	8 / 6,8 / 5,9	14	24	435
27806-320	stainless steel	M20	60	50	42	8	8 / 6,8 / 5,9	18	30	705

Machine feet

with vibration absorption

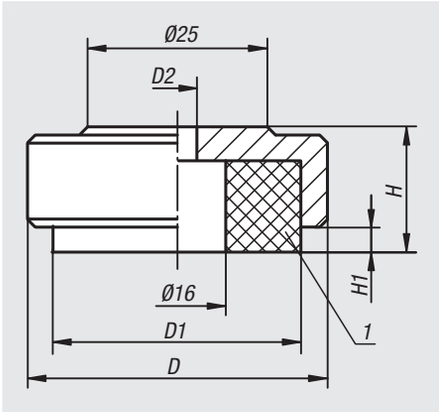

Material:
Plate steel or stainless steel 1.4404.
Damper plate PUR elastomer (Sylomer V12).

Version:
Plate blue passivated.
Damper plate grey, glued in, anti-slip.
Temp. range -30 °C to +70 °C.

Sample order:
nlm 27808-046

Note:
The load rating given in the table is a recommendation of the **permanent static** load up to which the damper plate should be used. This static load corresponds to a surface pressure of 0.4 N/mm², at which the material reaches its optimum absorption properties. Here it is taken into account that under dynamic loading an additional load of up to 0.6 N/mm² may occur. The damper plate absorbs vibrations and prevents the machine foot slipping.

Drawing reference:
1) damper plate

Order No.	Main material	D	D1	D2	H	H1 by 0 / 0.4 / 0.6 N/mm²	Load rating N (by 0.4 N/mm²)
27808-036	steel	36	30,5	5,5	15	4 / 2,8 / 1,9	212
27808-046	steel	46	40,5	6,6	17	4 / 2,8 / 1,9	435
27808-056	steel	56	50	9	19	4 / 2,8 / 1,9	705
27808-074	steel	74	68	9	21	4 / 2,8 / 1,9	1372
27808-1036	stainless steel	36	30,5	5,5	15	4 / 2,8 / 1,9	212
27808-1046	stainless steel	46	40,5	6,6	17	4 / 2,8 / 1,9	435
27808-1056	stainless steel	56	50	9	19	4 / 2,8 / 1,9	705

Swivel feet threaded spindles

steel or stainless steel

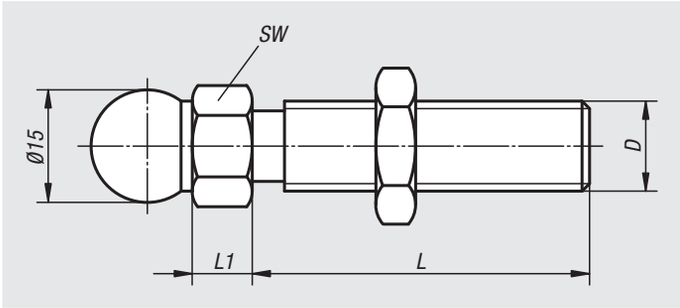

Material:
Steel or stainless steel 1.4301.

Version:
Steel blue passivated.
Stainless steel, bright.

Sample order:
nlm 27810-060151
nlm 27810-060151 and 27800-1030 **assembled**

Note for ordering:
If the threaded spindle and the plate are to be supplied assembled, please add the suffix **"assembled"** to the order number for the spindle and plate. (e.g. 27810-060151 and 27800-1030 **assembled**.)

Note:
Swivel feet consist of a plate and a threaded spindle. Any plate can be combined with any threaded spindle. The height of the complete swivel foot is calculated by the length of the threaded spindle + height of hexagon + 22.5 mm. (Overall height of swivel foot = L + L1 + 22.5 mm).

Order No. steel	Order No. stainless steel	D	L	L1	SW	Load rating max. kN
27810-060151	**27810-060152**	M6	15	7,5	14	2
27810-060301	**27810-060302**	M6	30	7,5	14	2
27810-080401	**27810-080402**	M8	40	7,5	14	3,5
27810-080801	**27810-080802**	M8	80	7,5	14	3,5
27810-100451	**27810-100452**	M10	45	7,5	14	4,7
27810-100701	**27810-100702**	M10	70	7,5	14	4,7
27810-100901	**27810-100902**	M10	90	7,5	14	4,7
27810-101251	**27810-101252**	M10	125	7,5	14	4,7
27810-101501	**27810-101502**	M10	150	7,5	14	4,7
27810-120451	**27810-120452**	M12	45	7,5	14	7,7
27810-120661	**27810-120662**	M12	66	7,5	14	7,7
27810-121001	**27810-121002**	M12	100	7,5	14	7,7
27810-121251	**27810-121252**	M12	125	7,5	14	7,7
27810-121501	**27810-121502**	M12	150	7,5	14	7,7
27810-140661	**27810-140662**	M14	66	7,5	14	11,1
27810-141001	**27810-141002**	M14	100	7,5	14	11,1
27810-141251	**27810-141252**	M14	125	7,5	14	11,1
27810-141501	**27810-141502**	M14	150	7,5	14	11,1
27810-160661	**27810-160662**	M16	66	7,5	17	14,5
27810-161001	**27810-161002**	M16	100	7,5	17	14,5
27810-161251	**27810-161252**	M16	125	7,5	17	14,5
27810-161501	**27810-161502**	M16	150	7,5	17	14,5
27810-162001	**27810-162002**	M16	200	7,5	17	14,5
27810-200851	**27810-200852**	M20	85	10,5	22	24,3
27810-201001	**27810-201002**	M20	100	10,5	22	24,3
27810-201251	**27810-201252**	M20	125	10,5	22	24,3
27810-201501	**27810-201502**	M20	150	10,5	22	24,3
27810-202001	**27810-202002**	M20	200	10,5	22	24,3
27810-240851	**27810-240852**	M24	85	10,5	24	36,1
27810-241001	**27810-241002**	M24	100	10,5	24	36,1
27810-241251	**27810-241252**	M24	125	10,5	24	36,1
27810-241501	**27810-241502**	M24	150	10,5	24	36,1
27810-242001	**27810-242002**	M24	200	10,5	24	36,1

Swivel feet ball joints

with internal thread

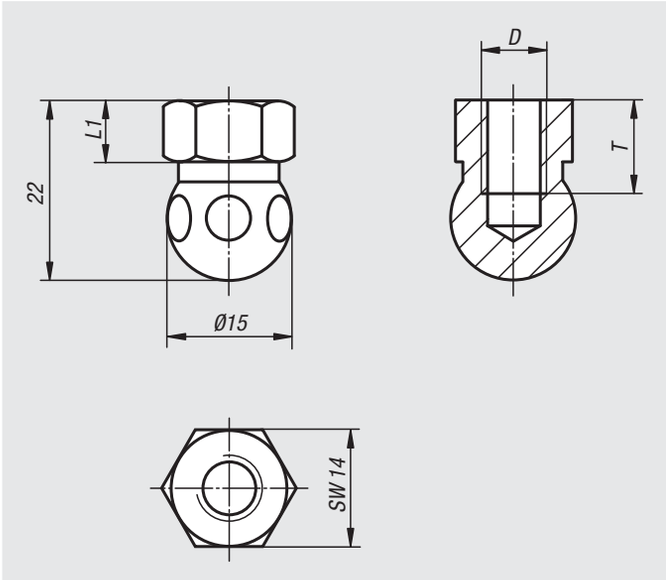

Material:
Steel or stainless steel 1.4301.

Version:
Steel blue passivated.
Stainless steel, bright.

Sample order:
nlm 27811-061
nlm 27811-061 and 27800-1030 **assembled**

Note for ordering:
If the ball joint and the plate are to be supplied assembled, please add the suffix **"assembled"** to the order number for the ball joint and plate. (e.g. 27811-061 and 27800-1030 **assembled**.)

Note:
For fastening swivel feet with standard screws.

Swivel feet consist of a ball joint and a plate. Any ball joint can be combined with any plate.
The height of the complete swivel foot is calculated by the height of the hexagon + 22.5 mm.
(Overall height of swivel foot = L1 + 22.5 mm).

Order No. steel	Order No. stainless steel	D	L1	T
27811-061	**27811-062**	M6	7,5	10
27811-081	**27811-082**	M8	7,5	10

Modular structure of a levelling foot

Application:
Levelling feet are of modular design. The components can be individually combined to match the application. Levelling feet can be used on machines, plants and even office furniture.

Modular design:
The levelling feet consist of two components - a plate and a threaded spindle. **Any** plate can be combined with **any** threaded spindle (see Fig. 1).

Assembly:
Insert the threaded spindle vertically into the levelling foot plate and fasten it from underneath with a spacer ring, washer and screw (no unintentional loosening of threaded spindle from the plate). If necessary, the two fastening holes (closed) in the levelling foot plate can be opened by simply punching them out to allow the levelling foot to be bolted to the floor.

Levelling feet height:
Regardless of the plate or threaded spindle size, levelling feet always have a minimum height of H = 30 mm (see Fig. 2). The height of the complete levelling foot is calculated from the length of the threaded spindle + 30 mm. (Total height of levelling foot = L + 30 mm).

Note for ordering:
If the levelling foot plate and the threaded spindle are to be supplied assembled, please add the suffix **"assembled"** to the order number for the plate and spindle (see sample order on the relevant product page).

Fig. 1

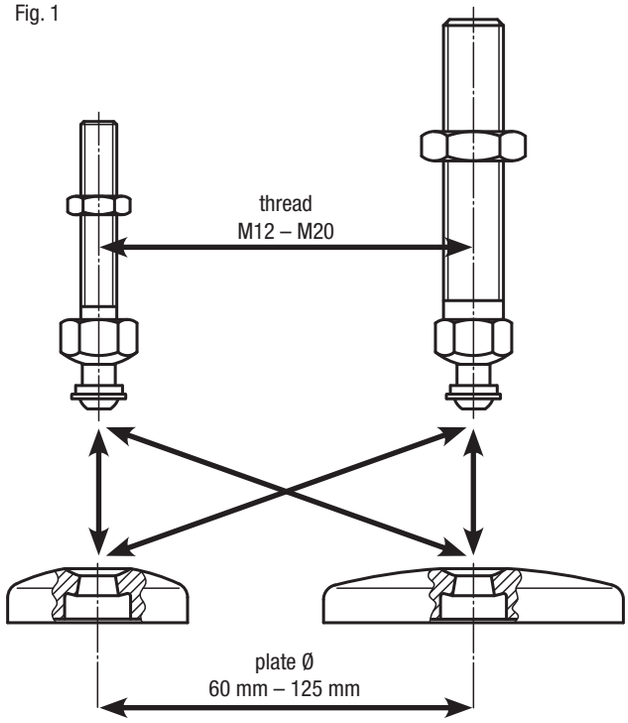

Fig. 2

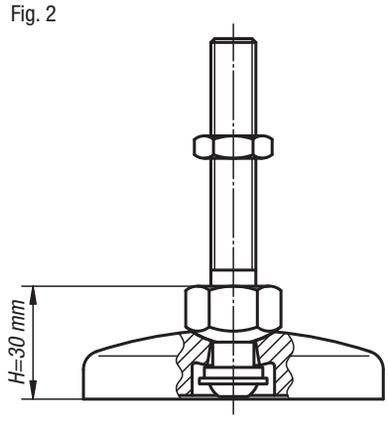

Inclination angle of threaded spindle:

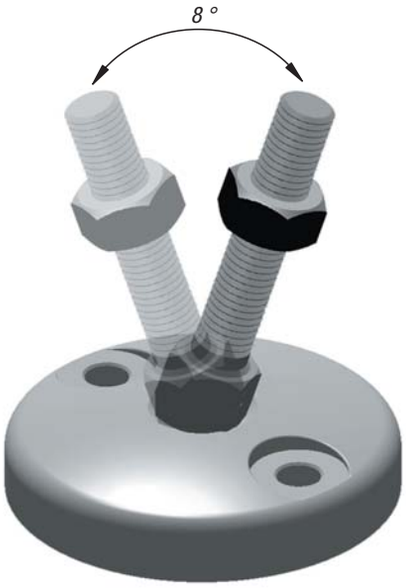

Levelling feet plates

plastic

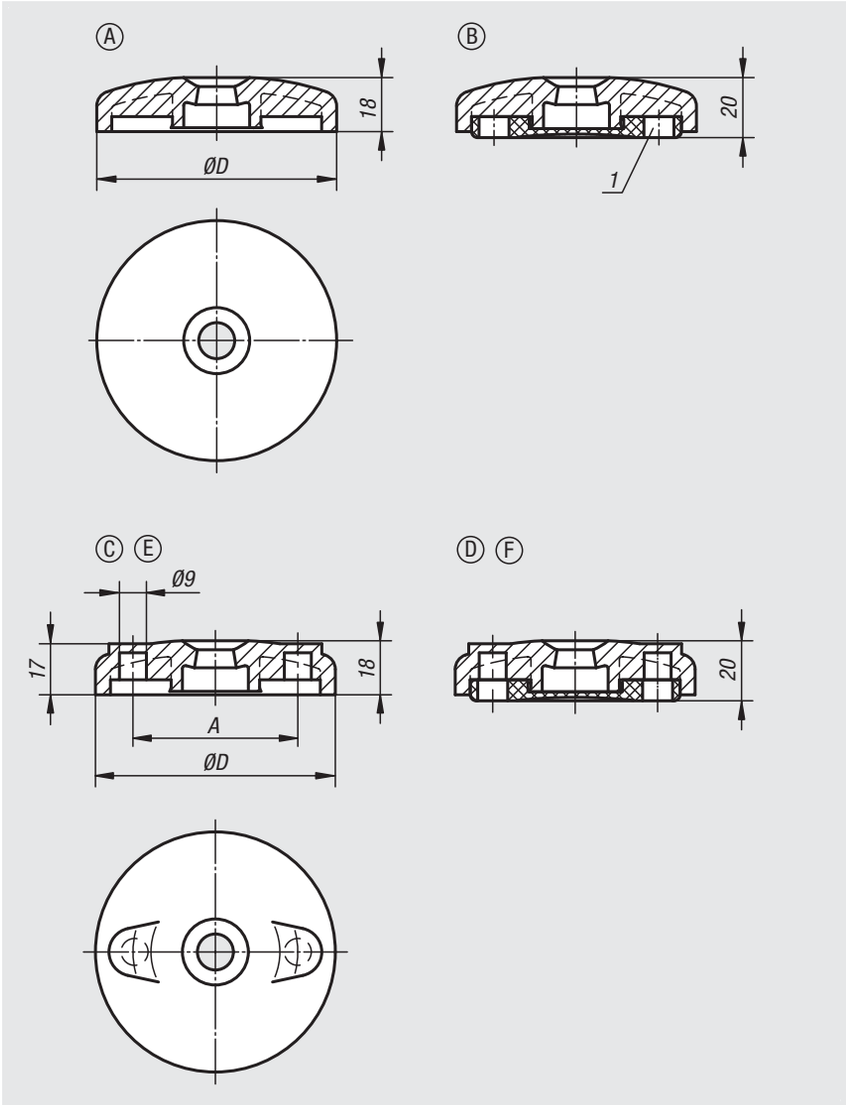

Material:
Plates, thermoplastic, fibreglass reinforced.
Anti-slip plate thermoplastic elastomer.

Version:
black.

Sample order:
nlm 27815-1060
nlm 27815-1060 and 27828-120661 **assembled**

Note for ordering:
If the levelling foot plate and the threaded spindle are to be supplied assembled, please add the suffix **"assembled"** to the order number for the plate and spindle. (e.g. 27815-1060 and 27828-120661 **assembled**.)

Note:
Levelling feet consist of a plate and a threaded spindle. Any plate can be combined with any threaded spindle.
The anti-slip plate absorbs vibrations and prevents the levelling foot slipping.
For matching threaded spindles see 27828.

Drawing reference:
1) From plate Ø 80
Form A without screw-on hole, without anti-slip plate
Form B without screw-on hole, with anti-slip plate
Form C with screw-on hole (closed), without anti-slip plate
Form D with screw-on hole (closed), with anti-slip plate
Form E with screw-on hole (open), without anti-slip plate
Form F with screw-on hole (open), with anti-slip plate

Order No. Form A	Order No. Form B	D	Load rating max. kN
27815-1060	**27815-2060**	60	12
27815-1080	**27815-2080**	80	12
27815-1100	**27815-2100**	100	12

Order No. Form C	Order No. Form D	Order No. Form E	Order No. Form F	D	A	Load rating max. kN
27815-3080	**27815-4080**	**27815-5080**	**27815-6080**	80	55	12
27815-3100	**27815-4100**	**27815-5100**	**27815-6100**	100	74	12

Levelling feet plates

plastic, heavy-duty version

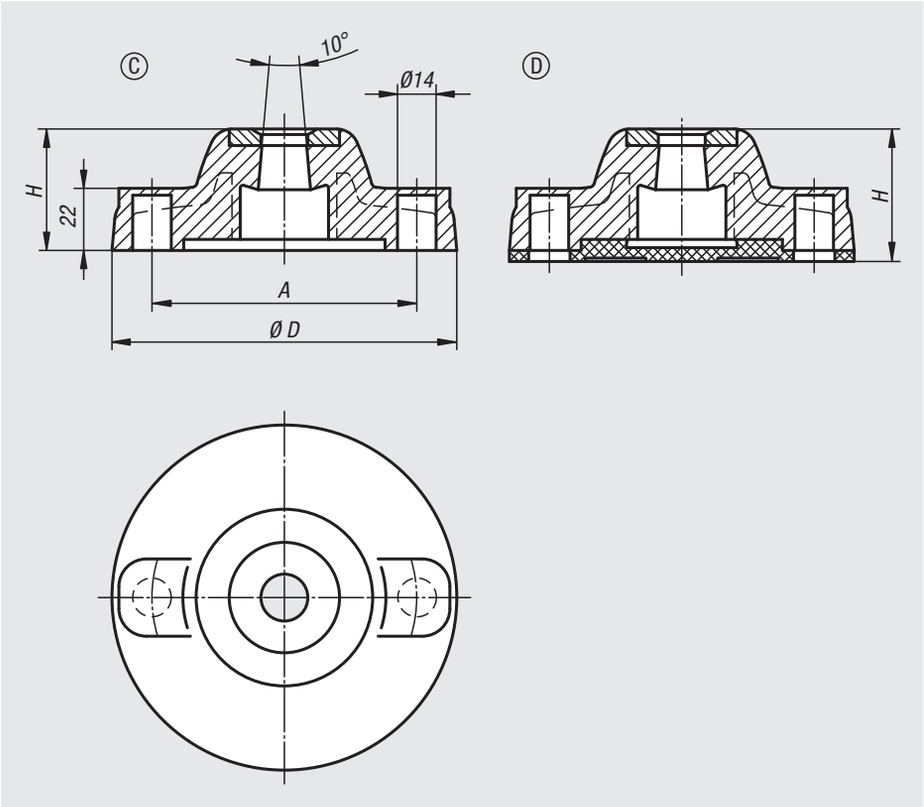

Material:
Plates, thermoplastic, fibreglass reinforced.
Anti-slip plate thermoplastic elastomer.

Version:
black.

Sample order:
nlm 27816-31251
nlm 27816-31251 and 27828-120661 **assembled**

Note for ordering:
If the levelling foot plate and the threaded spindle are to be supplied assembled, please add the suffix **"assembled"** to the order number for the plate and spindle. (e.g. 27816-31251 and 27828-120661 **assembled**.)

Note:
Levelling feet consist of a plate and a threaded spindle. Any plate can be combined with any threaded spindle. The anti-slip plate absorbs vibrations and prevents the levelling foot slipping.
For matching threaded spindles see 27828.

Drawing reference:
Form C with screw-on hole (closed), without anti-slip plate
Form D with screw-on hole (closed), with anti-slip plate

Order No.	Form	D	A	H	Load rating max. kN
27816-31251	C	125	96	44	18
27816-31751	C	175	135	45	25
27816-41251	D	125	96	48	18
27816-41751	D	175	135	49	25

Notes

Levelling feet plates

die-cast zinc or stainless steel

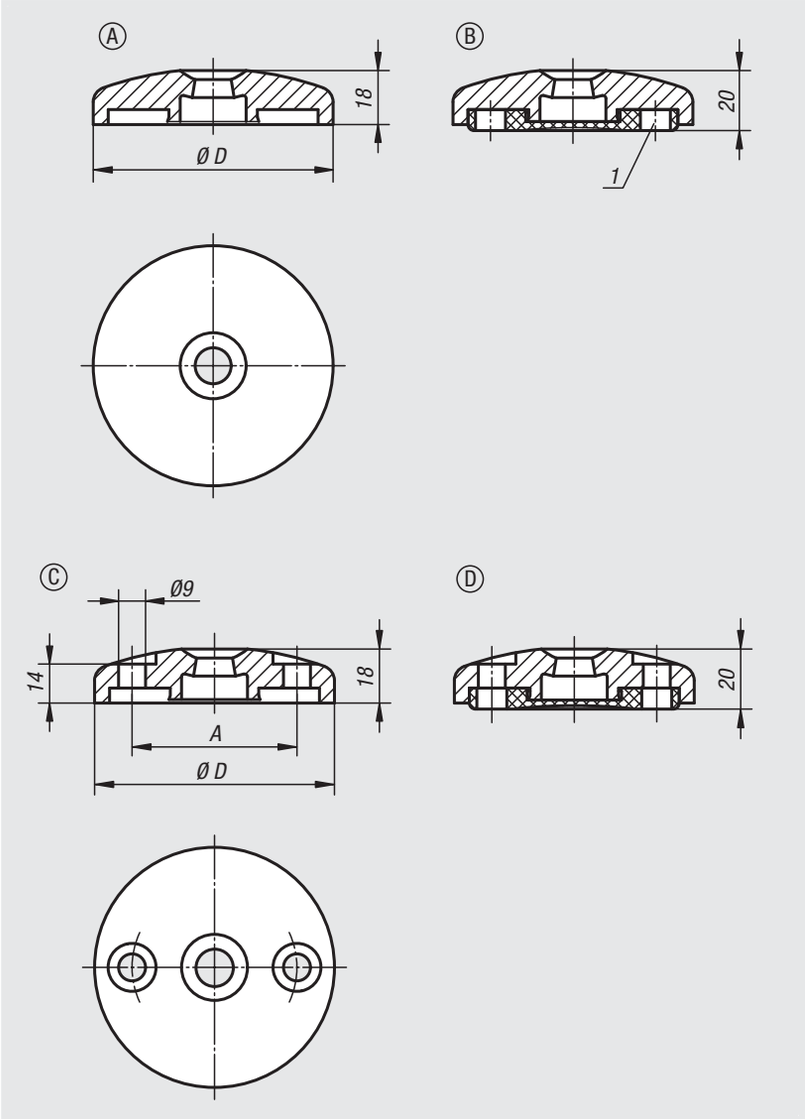

Material:
Plate die-cast zinc or stainless steel 1.4305.
Anti-slip plate thermoplastic elastomer.

Version:
Die-cast zinc plate, black powder-coated.
Stainless steel plate, bright.

Sample order:
nlm 27817-10601
nlm 27817-10601 and 27828-120661 **assembled**

Note for ordering:
If the levelling foot plate and the threaded spindle are to be supplied assembled, please add the suffix **"assembled"** to the order number for the plate and spindle.
(e.g. 27817-10601 and 27828-120661 **assembled**).

Note:
Levelling feet consist of a plate and a threaded spindle. Any plate can be combined with any threaded spindle.
The anti-slip plate absorbs vibrations and prevents the levelling foot slipping.
For matching threaded spindles see 27828.

Drawing reference:
1) From plate Ø 80
Form A without screw-on hole, without anti-slip plate
Form B without screw-on hole, with anti-slip plate
Form C with screw-on hole (open), without anti-slip plate
Form D with screw-on hole (open), with anti-slip plate

Levelling feet plates

die-cast zinc or stainless steel

Order No. Form A	Order No. Form B	Main material	D	Load rating max. kN
27817-10401	-	zinc	40	20
27817-10451	-	zinc	45	25
27817-10501	-	zinc	50	25
27817-10601	**27817-20601**	zinc	60	35
27817-10801	**27817-20801**	zinc	80	35
27817-11001	**27817-21001**	zinc	100	35
27817-11201	**27817-21201**	zinc	120	35

Order No. Form C	Order No. Form D	Main material	D	A	Load rating max. kN
27817-30801	**27817-40801**	zinc	80	55	35
27817-31001	**27817-41001**	zinc	100	74	35

Order No. Form A	Order No. Form B	Main material	D	Load rating max. kN
27817-10602	**27817-20602**	stainless steel	60	45
27817-10802	**27817-20802**	stainless steel	80	45
27817-11002	**27817-21002**	stainless steel	100	45

Order No. Form C	Order No. Form D	Main material	D	A	Load rating max. kN
27817-30802	**27817-40802**	stainless steel	80	55	45
27817-31002	**27817-41002**	stainless steel	100	74	45

Levelling feet plates extended

die-cast zinc

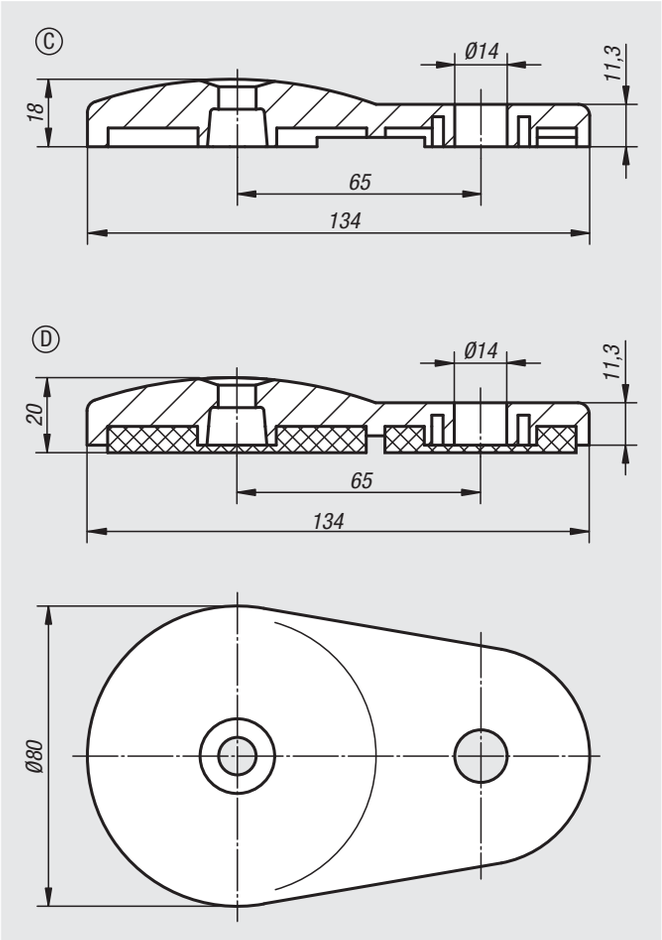

Material:
Plate die-cast zinc.
Anti-slip plate thermoplastic elastomer.

Version:
Plate black powder-coated.

Sample order:
nlm 27818-30801
nlm 27818-30801 and 27828-120661 **assembled**

Note for ordering:
If the levelling foot plate and the threaded spindle are to be supplied assembled, please add the suffix **"assembled"** to the order number for the plate and spindle. (e.g. 27818-30801 and 27828-120661 **assembled**.)

Note:
Levelling feet consist of a plate and a threaded spindle. Any plate can be combined with any threaded spindle. The anti-slip plate absorbs vibrations and prevents the levelling foot slipping. For matching threaded spindles see 27828.

Drawing reference:
Form C with screw-on hole, without anti-slip plate
Form D with screw-on hole, with anti-slip plate

Order No.	Form	Load rating max. kN
27818-30801	C	35
27818-40801	D	35

Levelling feet threaded spindles

steel or stainless steel

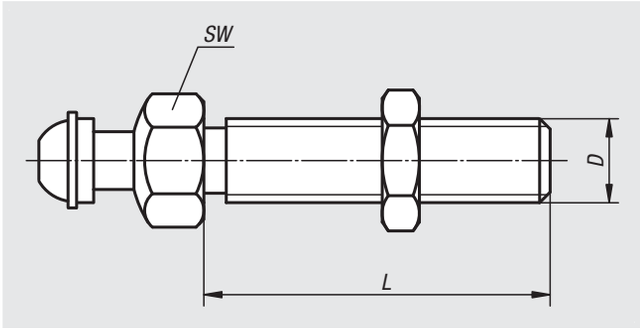

Material:
Steel or 1.4305 stainless steel

Version:
Steel blue passivated.
Stainless steel, bright.

Sample order:
nlm 27828-120661
nlm 27828-120661 and 27815-1060 **assembled**

Note for ordering:
If the threaded spindle and the levelling foot plate are to be supplied assembled, please add the suffix **"assembled"** to the order number for the spindle and plate. (e.g. 27828-120661 and 27815-1060 **assembled**.)

Note:
Levelling feet consist of a plate and a threaded spindle. Any plate can be combined with any threaded spindle. The height of the complete levelling foot is calculated from the length of the threaded spindle + 30 mm. (Total height of levelling foot = L + 30 mm)

Order No. steel	Order No. stainless steel	D	L	SW	Load rating max. kN
27828-120661	**27828-120662**	M12	66	22	7,7
27828-121001	**27828-121002**	M12	100	22	7,7
27828-121251	**27828-121252**	M12	125	22	7,7
27828-121501	**27828-121502**	M12	150	22	7,7
27828-160661	**27828-160662**	M16	66	22	14,5
27828-161001	**27828-161002**	M16	100	22	14,5
27828-161251	**27828-161252**	M16	125	22	14,5
27828-161501	**27828-161502**	M16	150	22	14,5
27828-162001	**27828-162002**	M16	200	22	14,5
27828-201001	**27828-201002**	M20	100	22	24,3
27828-201251	**27828-201252**	M20	125	22	24,3
27828-201501	**27828-201502**	M20	150	22	24,3
27828-202001	**27828-202002**	M20	200	22	24,3

Modular structure of an ECO levelling foot

Application:
ECO levelling feet are of modular design. The components can be individually combined to match the application. However, the threaded spindle is not screwed but pressed in permanently. The levelling feet are used for a wide range of machines, plants and even office furniture.

Modular design:
The levelling feet consist of two components - a plate and a threaded spindle. **Any** plate can be combined with **any** threaded spindle (see Fig. 1).

Assembly:
Place levelling foot plate on threaded spindle and press pin in up to collar (threaded spindle cannot be inadvertently removed from plate).

Note for ordering:
If the levelling foot plate and the threaded spindle are to be supplied assembled, please add the suffix **"assembled"** to the order number for the plate and spindle (see sample order on the relevant product page).

Fig. 1

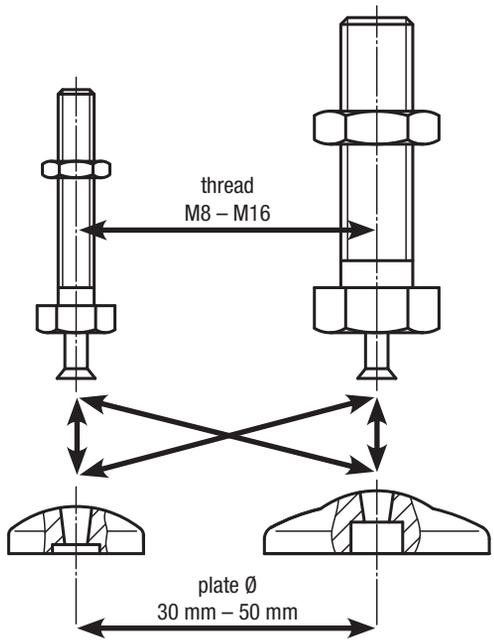

Fig. 2

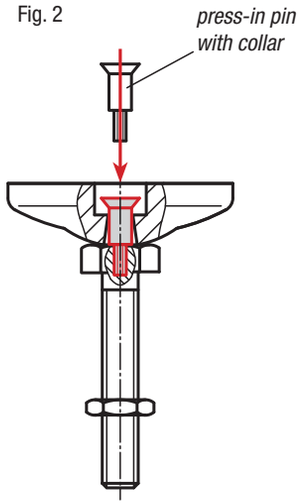

Inclination angle of threaded spindle:

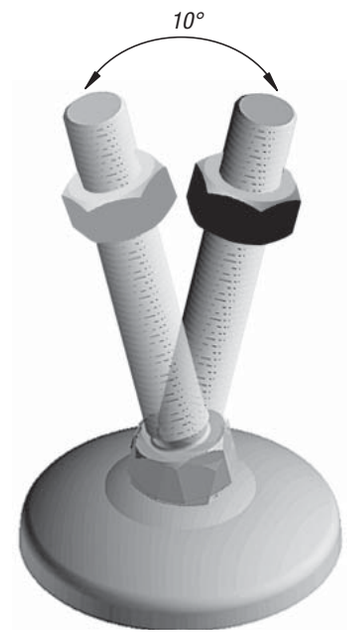

Levelling feet plates ECO

die-cast zinc, stainless steel or plastic

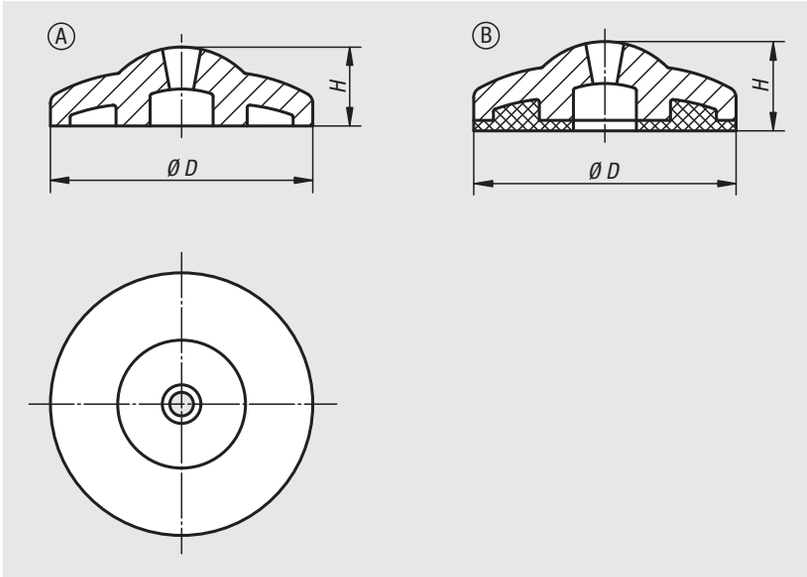

Material:
Plate thermoplastic, die-cast zinc or stainless steel 1.4305.
Anti-slip plate thermoplastic elastomer.

Version:
Thermoplastic plate black.
Die-cast zinc plate blue galvanized.
Stainless steel plate bright.

Sample order:
nlm 27830-10303
nlm 27830-10303 and 27832-080801 **assembled**

Note for ordering:
If the levelling foot plate and the threaded spindle are to be supplied assembled, please add the suffix **"assembled"** to the order number for the plate and spindle. (e.g. 27830-10303 and 27832-080801 **assembled**).

Note:
ECO levelling feet consist of a plate and a threaded spindle.
Any plate can be combined with any threaded spindle.
The anti-slip plate absorbs vibrations and prevents the levelling foot slipping.
For matching threaded spindles see 27832.

Drawing reference:
Form A without anti-slip plate
Form B with anti-slip plate

Order No.	Form	Main material	D	H	Load rating max. kN
27830-10301	A	zinc	30	11,5	16
27830-10401	A	zinc	40	12	18
27830-10501	A	zinc	50	14,5	20
27830-20301	B	zinc	30	13,5	16
27830-20401	B	zinc	40	14,5	18
27830-20501	B	zinc	50	17,5	20
27830-10302	A	stainless steel	30	11,5	22
27830-10402	A	stainless steel	40	12	24
27830-10502	A	stainless steel	50	14,5	26
27830-20302	B	stainless steel	30	13,5	22
27830-20402	B	stainless steel	40	14,5	24
27830-20502	B	stainless steel	50	17,5	26
27830-10303	A	thermoplastic	30	11,5	15
27830-10403	A	thermoplastic	40	12	15
27830-10503	A	thermoplastic	50	14,5	15
27830-20303	B	thermoplastic	30	13,5	15
27830-20403	B	thermoplastic	40	14,5	15
27830-20503	B	thermoplastic	50	17,5	15

Levelling feet ECO threaded spindles

steel or stainless steel

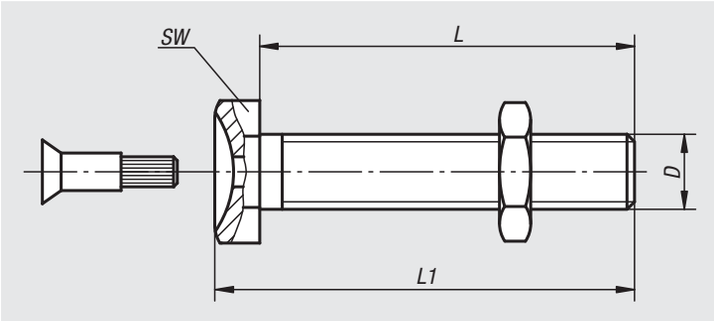

Material:
Steel or 1.4305 stainless steel

Version:
Steel blue passivated.
Stainless steel, bright.

Sample order:
nlm 27832-101201
nlm 27832-101201 and 27830-10301 **assembled**

Note for ordering:
If the threaded spindle and the levelling foot plate are to be supplied assembled, please add the suffix **"assembled"** to the order number for the spindle and plate. (e.g. 27832-080251 and 27830-10301 **assembled**.)

Note:
ECO levelling feet consist of a threaded spindle and a plate. Any threaded spindle can be combined with any plate.

Order No. steel	Order No. stainless steel	D	L	L1	SW	Load rating max. kN
27832-080251	**27832-080252**	M8	25	29,5	13	3,5
27832-080401	**27832-080402**	M8	40	44,5	13	3,5
27832-080501	**27832-080502**	M8	50	54,5	13	3,5
27832-080701	**27832-080702**	M8	70	74,5	13	3,5
27832-080801	**27832-080802**	M8	80	84,5	13	3,5
27832-081001	**27832-081002**	M8	100	104,5	13	3,5
27832-081201	**27832-081202**	M8	120	124,5	13	3,5
27832-100251	**27832-100252**	M10	25	30	17	4,7
27832-100401	**27832-100402**	M10	40	45	17	4,7
27832-100501	**27832-100502**	M10	50	55	17	4,7
27832-100701	**27832-100702**	M10	70	75	17	4,7
27832-100801	**27832-100802**	M10	80	85	17	4,7
27832-101001	**27832-101002**	M10	100	105	17	4,7
27832-101201	**27832-101202**	M10	120	125	17	4,7
27832-120251	**27832-120252**	M12	25	31	19	7,7
27832-120401	**27832-120402**	M12	40	46	19	7,7
27832-120501	**27832-120502**	M12	50	56	19	7,7
27832-120701	**27832-120702**	M12	70	76	19	7,7
27832-120801	**27832-120802**	M12	80	86	19	7,7
27832-121001	**27832-121002**	M12	100	106	19	7,7
27832-121201	**27832-121202**	M12	120	126	19	7,7
27832-160501	**27832-160502**	M16	50	58,5	24	14,5
27832-161001	**27832-161002**	M16	100	108,5	24	14,5
27832-161501	**27832-161502**	M16	150	158,5	24	14,5

Ducks feet

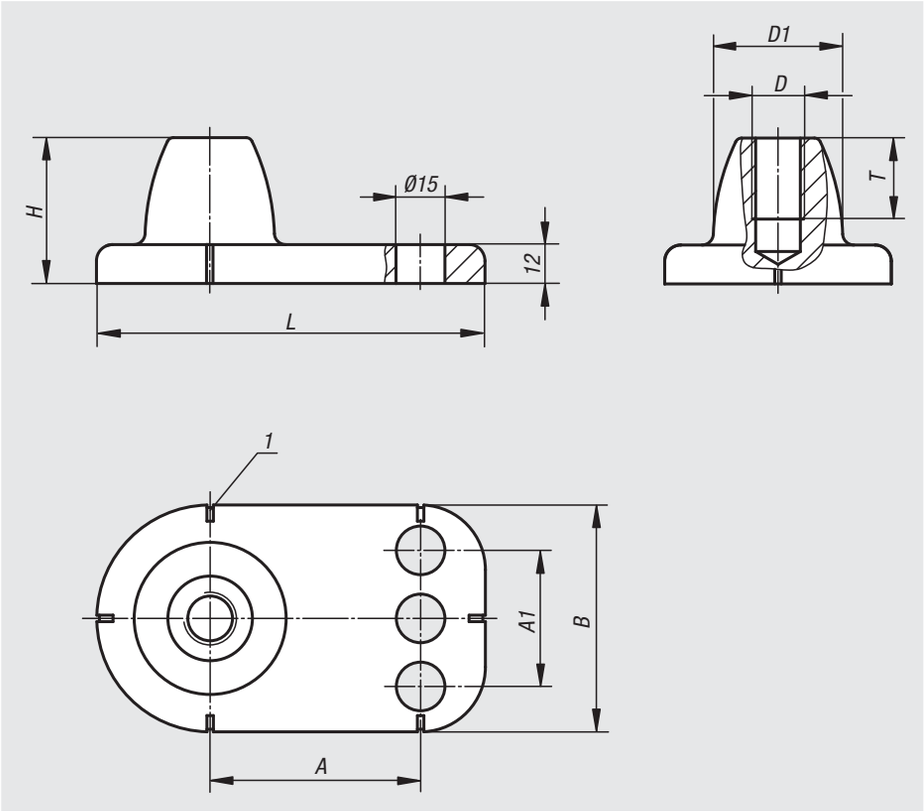

Material:
Die-cast aluminium.

Version:
Bright, vibratory ground.

Sample order:
nlm 27833-161

Note:
Stabile levelling foot which is ideally suited for conveyor units. With aligning markings to precisely position the ducks feet.

Accessories:
Matching threaded rods 07640.

Drawing reference:
1) alignment marks

Order No.	A	A1	B	D	D1	H	L	T	Load capacity N
27833-161	65	-	70	M16	40	45	119,5	25	4000
27833-201	75	55	90	M20	52	50	139,5	27,5	6000

Tube inserts square

with tapped bush

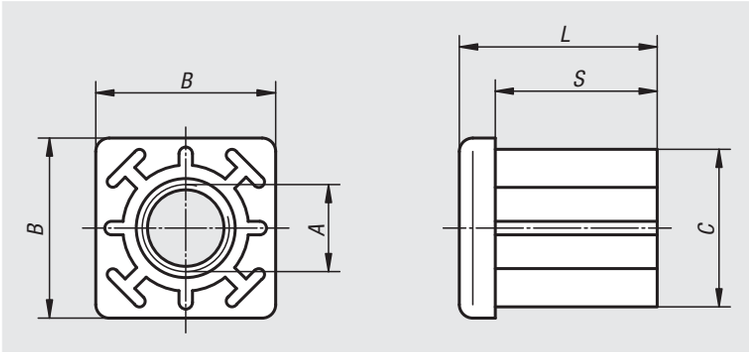

Material:
Body fibreglass reinforced thermoplastic.
Threaded insert brass.

Version:
Insert black.
Tapped bush nickel-plated.

Sample order:
nlm 27835-103015

Note:
Threaded square inserts for attaching levelling feet, swivel feet and castors to square tubes.

Order No.	A	B	C	L	S	Suitable for square tubes	Load rating max. kN
27835-103015	M10	30	27,5	33	27	30 x 1,5	5
27835-123015	M12	30	27,5	33	27	30 x 1,5	5
27835-143015	M14	30	27,5	33	27	30 x 1,5	5
27835-163015	M16	30	27,5	33	27	30 x 1,5	5
27835-103020	M10	30	26,5	33	27	30 x 2	5
27835-123020	M12	30	26,5	33	27	30 x 2	5
27835-143020	M14	30	26,5	33	27	30 x 2	5
27835-163020	M16	30	26,5	33	27	30 x 2	5
27835-104015	M10	40	37,5	43	35	40 x 1,5	8
27835-124015	M12	40	37,5	43	35	40 x 1,5	8
27835-144015	M14	40	37,5	43	35	40 x 1,5	8
27835-164015	M16	40	37,5	43	35	40 x 1,5	8
27835-204015	M20	40	37,5	43	35	40 x 1,5	8
27835-104020	M10	40	36,5	43	35	40 x 2	10
27835-124020	M12	40	36,5	43	35	40 x 2	10
27835-144020	M14	40	36,5	43	35	40 x 2	10
27835-164020	M16	40	36,5	43	35	40 x 2	10
27835-204020	M20	40	36,5	43	35	40 x 2	10
27835-104025	M10	40	35,5	43	35	40 x 2,5	10
27835-124025	M12	40	35,5	43	35	40 x 2,5	10
27835-144025	M14	40	35,5	43	35	40 x 2,5	10
27835-164025	M16	40	35,5	43	35	40 x 2,5	10
27835-204025	M20	40	35,5	43	35	40 x 2,5	10
27835-104030	M10	40	34,5	43	35	40 x 3	10
27835-124030	M12	40	34,5	43	35	40 x 3	10
27835-144030	M14	40	34,5	43	35	40 x 3	10
27835-164030	M16	40	34,5	43	35	40 x 3	10
27835-204030	M20	40	34,5	43	35	40 x 3	10
27835-104040	M10	40	32,5	43	35	40 x 4	10
27835-124040	M12	40	32,5	43	35	40 x 4	10
27835-144040	M14	40	32,5	43	35	40 x 4	10

Order No.	A	B	C	L	S	Suitable for square tubes	Load rating max. kN
27835-164040	M16	40	32,5	43	35	40 x 4	10
27835-204040	M20	40	32,5	43	35	40 x 4	10
27835-125015	M12	50	47,5	55	44	50 x 1,5	8
27835-145015	M14	50	47,5	55	44	50 x 1,5	8
27835-165015	M16	50	47,5	55	44	50 x 1,5	8
27835-205015	M20	50	47,5	55	44	50 x 1,5	8
27835-125020	M12	50	46,5	55	44	50 x 2	12
27835-145020	M14	50	46,5	55	44	50 x 2	12
27835-165020	M16	50	46,5	55	44	50 x 2	12
27835-205020	M20	50	46,5	55	44	50 x 2	12
27835-125025	M12	50	45,5	55	44	50 x 2,5	12
27835-145025	M14	50	45,5	55	44	50 x 2,5	12
27835-165025	M16	50	45,5	55	44	50 x 2,5	12
27835-205025	M20	50	45,5	55	44	50 x 2,5	12
27835-125030	M12	50	44,5	55	44	50 x 3	12
27835-145030	M14	50	44,5	55	44	50 x 3	12
27835-165030	M16	50	44,5	55	44	50 x 3	12
27835-205030	M20	50	44,5	55	44	50 x 3	12
27835-125040	M12	50	42,5	55	44	50 x 4	12
27835-145040	M14	50	42,5	55	44	50 x 4	12
27835-165040	M16	50	42,5	55	44	50 x 4	12
27835-205040	M20	50	42,5	55	44	50 x 4	12
27835-146020	M14	60	56,5	55	45	60 x 2	12
27835-166020	M16	60	56,5	55	45	60 x 2	12
27835-206020	M20	60	56,5	55	45	60 x 2	12
27835-146030	M14	60	54,5	55	45	60 x 3	12
27835-166030	M16	60	54,5	55	45	60 x 3	12
27835-206030	M20	60	54,5	55	45	60 x 3	12
27835-146040	M14	60	52,5	55	45	60 x 4	12
27835-166040	M16	60	52,5	55	45	60 x 4	12
27835-206040	M20	60	52,5	55	45	60 x 4	12

Tube inserts round

with tapped bush

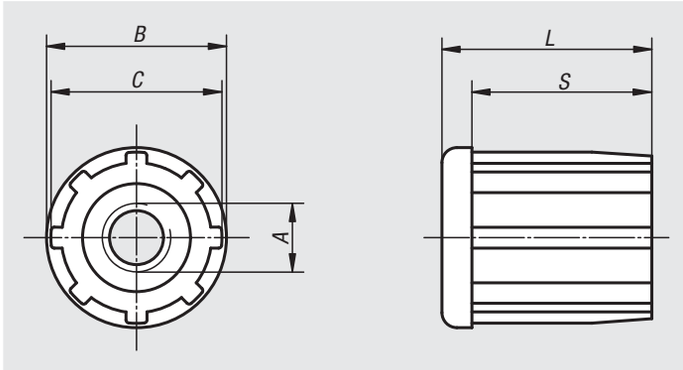

Material:
Body fibreglass reinforced thermoplastic.
Threaded insert brass.

Version:
Insert black.
Tapped bush nickel-plated.

Sample order:
nlm 27836-103010

Note:
Threaded square inserts for attaching levelling feet, swivel feet and castors to round tubes.

Order No.	A	B	C	L	S	Suitable for tubes	Load rating max. kN
27836-103010	M10	30	28,4	33	27	Ø 30 x 1	5
27836-123010	M12	30	28,4	33	27	Ø 30 x 1	5
27836-143010	M14	30	28,4	33	27	Ø 30 x 1	5
27836-163010	M16	30	28,4	33	27	Ø 30 x 1	5
27836-103815	M10	38	35,5	43	35	Ø 38 x 1,5	5
27836-123815	M12	38	35,5	43	35	Ø 38 x 1,5	5
27836-143815	M14	38	35,5	43	35	Ø 38 x 1,5	5
27836-163815	M16	38	35,5	43	35	Ø 38 x 1,5	5
27836-104215	M10	42	39,9	43	35	Ø 42,4 x 1,5	6
27836-124215	M12	42	39,9	43	35	Ø 42,4 x 1,5	6
27836-144215	M14	42	39,9	43	35	Ø 42,4 x 1,5	6
27836-164215	M16	42	39,9	43	35	Ø 42,4 x 1,5	6
27836-204215	M20	42	39,9	43	35	Ø 42,4 x 1,5	6
27836-124815	M12	48	45,8	55	44	Ø 48,3 x 1,5	6
27836-144815	M14	48	45,8	55	44	Ø 48,3 x 1,5	6
27836-164815	M16	48	45,8	55	44	Ø 48,3 x 1,5	6
27836-204815	M20	48	45,8	55	44	Ø 48,3 x 1,5	6
27836-125015	M12	50	48,4	55	44	Ø 50,9 x 1,5	6
27836-145015	M14	50	48,4	55	44	Ø 50,9 x 1,5	6
27836-165015	M16	50	48,4	55	44	Ø 50,9 x 1,5	6
27836-205015	M20	50	48,4	55	44	Ø 50,9 x 1,5	6

Levelling feet

for aluminium profiles

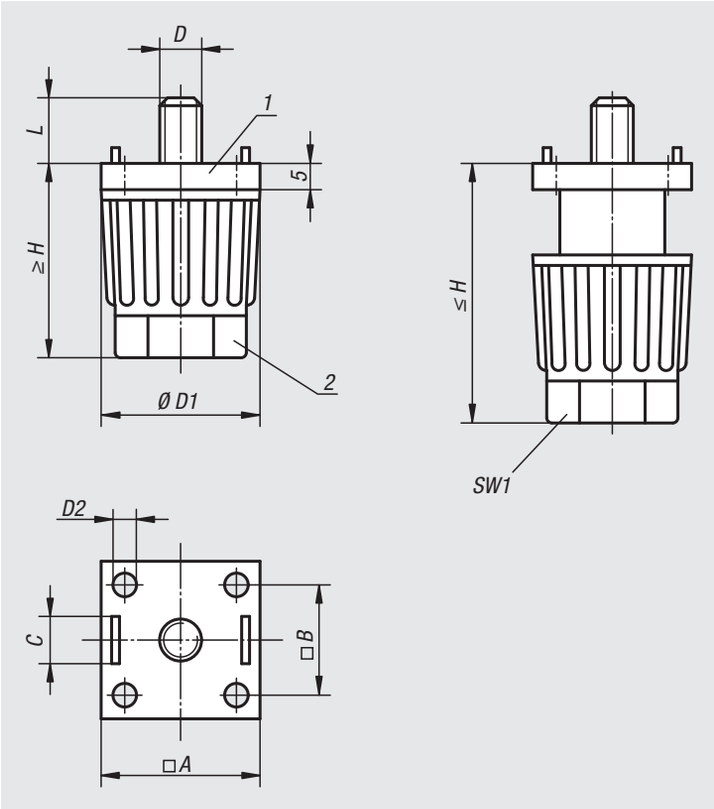

Material:
Body fibreglass reinforced thermoplastic.
Spindle and washer steel.

Version:
Body black.
Spindle and washer galvanized.

Sample order:
nlm 27840-300806

Note:
These levelling feet are suitable for tables and lighter installations. The foot height is adjusted by turning the base nut by hand or spanner. The pins on the top flange centre the foot and prevent it turning. These levelling feet can be attached to aluminium profiles using T-slot nuts, no need for drilling.

Drawing reference:
1) support flange
2) nut

Side mounted in profile keyway

no drilling required when using a T-slot nut

Profile end mounted

Order No.	A for aluminium profile	B	C for slot	D	D1	D2 for countersunk screw	H min. - max.	L	SW1	Load rating max. kN
27840-300806	30	20,5	8	M6	30	M4	35-50	9	22	1,5
27840-300808	30	20,5	8	M8	30	M4	35-50	9	22	1,5
27840-301006	30	20,5	10	M6	30	M4	35-50	9	22	1,5
27840-400808	40	28	8	M8	40	M6	45-65	9	30	1,5
27840-401006	40	28	10	M6	40	M6	45-65	9	30	1,5
27840-401008	40	28	10	M8	40	M6	45-65	9	30	1,5

Levelling feet

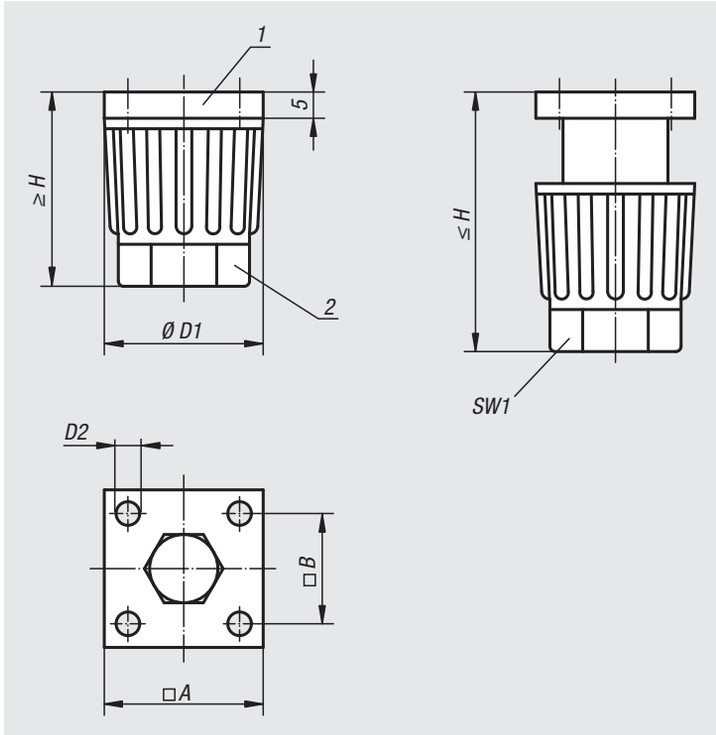

Material:
Body fibreglass reinforced thermoplastic.
Hexagon head screw steel.

Version:
Body black.
Hexagon head screw galvanized.

Sample order:
nlm 27841-3004

Note:
The flat top flange and sunken screw head make these levelling feet ideal for mounting on smooth surfaces.
The foot height is adjusted by turning the base nut by hand or spanner.

Drawing reference:
1) support flange
2) nut

Order No.	A	B	D1	D2 for countersunk screw	H min. - max.	SW1	Load rating max. kN
27841-3004	30	20,5	30	M4	35-50	22	1,5
27841-4006	40	28	40	M6	45-65	30	1,5

Technical information
Hinges

Hinges
We have listed a wide range of hinges on the following pages. Many more combinations are possible where hinges with guide tabs are required i.e. when combining aluminium profiles with different slot widths.

Guide tabs
Many hinges can be supplied on request with guide tabs for the slots of aluminium profiles. They secure the hinge against twisting and make it stronger. The hinges are designed in such a way that the guide tabs can simply be broken out with a screwdriver.

without
guide tabs

with
guide tabs
for aluminium
profiles with slot

Left and right hinge
Each lift-off hinge has a left and right version. Before ordering it should be known on which side the door or hatch is to be mounted.

Left hinge.
The left hinge half is fixed.
The hatch or door opens from right to left.

Right hinge.
The right hinge half is fixed.
The hatch or door opens from left to right.

Fixed hinge.
The hinge is non-liftoff.
It is suitable for opening left or right.

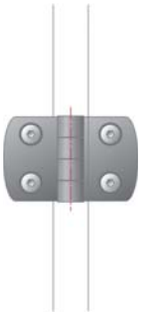

Tip
If you want to fit a door or hatch so that it cannot be lifted off, you can still use a left and right lift-off hinge. The two hinges are fitted in the end position and secure each other mutually.

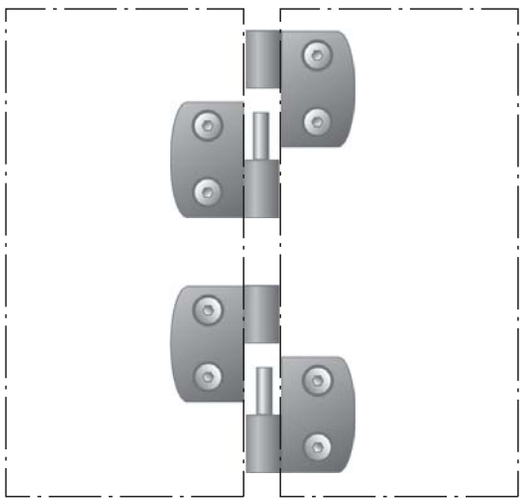

Hinges

plastic, lift-off, left

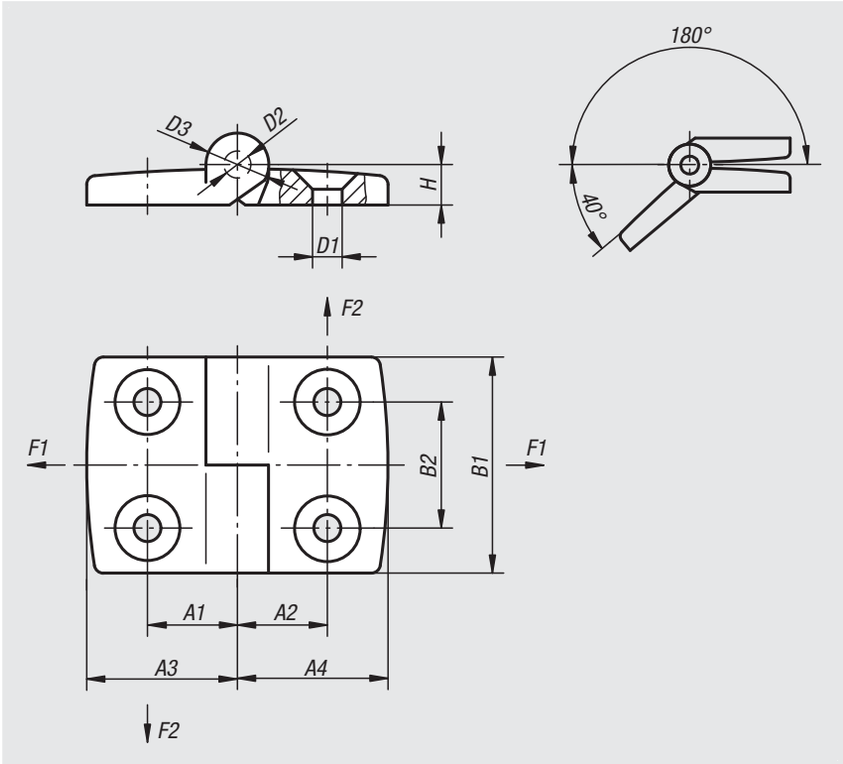

Material:
Fibreglass reinforced thermoplastic.
Hinge pin stainless steel.

Version:
Hinge black. Pin bright.

Sample order:
nlm 27850-1301825

Note:
All hinges can be supplied on request with guide tabs for the slots of aluminium profiles (slots 6, 8 and 10). They facilitate mounting, secure the hinge against twisting and make it stronger.

Order No.	A1	A2	A3	A4	B1	B2	D1	D2	D3	H	F1 max. kN	F2 max. kN
27850-1251515	15	15	26	26	48	28	6,6	6	14	9	0,625	0,425
27850-1251518	15	17,5	26	29,5	48	28	6,6	6	14	9	0,7	0,5
27850-1251520	15	20	26	35,5	48	28	6,6	6	14	9	0,7	0,4
27850-1251523	15	22,5	26	38,5	48	28	6,6	6	14	9	0,8	0,35
27850-1251525	15	25	26	43,5	48	28	6,6	6	14	9	0,8	0,325
27850-1251528	15	27,5	26	48,5	48	28	6,6	6	14	9	0,8	0,32
27850-1251533	15	32,5	26	57,5	48	28	6,6	6	14	9	0,8	0,24
27850-1301815	17,5	15	29,5	26	48	28	6,6	6	14	9	0,75	0,45
27850-1301818	17,5	17,5	29,5	29,5	48	28	6,6	6	14	9	0,75	0,5
27850-1301820	17,5	20	29,5	35,5	48	28	6,6	6	14	9	0,75	0,4
27850-1301823	17,5	22,5	29,5	38,5	48	28	6,6	6	14	9	0,8	0,35
27850-1301825	17,5	25	29,5	43,5	48	28	6,6	6	14	9	0,8	0,35
27850-1301828	17,5	27,5	29,5	48,5	48	28	6,6	6	14	9	0,8	0,35
27850-1301833	17,5	32,5	29,5	57,5	48	28	6,6	6	14	9	0,8	0,24
27850-1352015	20	15	35,5	26	48	28	6,6	6	14	9	0,75	0,4
27850-1352018	20	17,5	35,5	29,5	48	28	6,6	6	14	9	0,75	0,5
27850-1352020	20	20	35,5	35,5	48	28	6,6	6	14	9	0,75	0,4
27850-1352023	20	22,5	35,5	38,5	48	28	6,6	6	14	9	0,8	0,35
27850-1352025	20	25	35,5	43,5	48	28	6,6	6	14	9	0,8	0,35
27850-1352028	20	27,5	35,5	48,5	48	28	6,6	6	14	9	0,9	0,35
27850-1352033	20	32,5	35,5	57,5	48	28	6,6	6	14	9	0,8	0,24
27850-1402315	22,5	15	38,5	26	48	28	6,6	6	14	9	0,65	0,425
27850-1402318	22,5	17,5	38,5	29,5	48	28	6,6	6	14	9	0,75	0,5
27850-1402320	22,5	20	38,5	35,5	48	28	6,6	6	14	9	0,75	0,4
27850-1402323	22,5	22,5	38,5	38,5	48	28	6,6	6	14	9	0,8	0,4

Order No.	A1	A2	A3	A4	B1	B2	D1	D2	D3	H	F1 max. kN	F2 max. kN
27850-1402325	22,5	25	38,5	43,5	48	28	6,6	6	14	9	0,8	0,35
27850-1402328	22,5	27,5	38,5	48,5	48	28	6,6	6	14	9	0,8	0,35
27850-1402333	22,5	32,5	38,5	57,5	48	28	6,6	6	14	9	0,8	0,24
27850-1452515	25	15	43,5	26	48	28	6,6	6	14	9	0,65	0,425
27850-1452518	25	17,5	43,5	29,5	48	28	6,6	6	14	9	0,75	0,5
27850-1452520	25	20	43,5	35,5	48	28	6,6	6	14	9	0,7	0,4
27850-1452523	25	22,5	43,5	38,5	48	28	6,6	6	14	9	0,8	0,35
27850-1452525	25	25	43,5	43,5	48	28	6,6	6	14	9	0,8	0,325
27850-1452528	25	27,5	43,5	48,5	48	28	6,6	6	14	9	0,8	0,32
27850-1452533	25	32,5	43,5	57,5	48	28	6,6	6	14	9	0,8	0,24
27850-1502815	27,5	15	48,5	26	48	28	6,6	6	14	9	0,65	0,425
27850-1502818	27,5	17,5	48,5	29,5	48	28	6,6	6	14	9	0,75	0,5
27850-1502820	27,5	20	48,5	35,5	48	28	6,6	6	14	9	0,7	0,4
27850-1502823	27,5	22,5	48,5	38,5	48	28	6,6	6	14	9	0,8	0,35
27850-1502825	27,5	25	48,5	43,5	48	28	6,6	6	14	9	0,8	0,325
27850-1502828	27,5	27,5	48,5	48,5	48	28	6,6	6	14	9	0,8	0,32
27850-1502833	27,5	32,5	48,5	57,5	48	28	6,6	6	14	9	0,8	0,24
27850-1603315	32,5	15	57,5	26	48	28	6,6	6	14	9	0,65	0,425
27850-1603318	32,5	17,5	57,5	29,5	48	28	6,6	6	14	9	0,75	0,5
27850-1603320	32,5	20	57,5	35,5	48	28	6,6	6	14	9	0,7	0,4
27850-1603323	32,5	22,5	57,5	38,5	48	28	6,6	6	14	9	0,8	0,35
27850-1603325	32,5	25	57,5	43,5	48	28	6,6	6	14	9	0,8	0,325
27850-1603328	32,5	27,5	57,5	48,5	48	28	6,6	6	14	9	0,9	0,32
27850-1603333	32,5	32,5	57,5	57,5	48	28	6,6	6	14	9	0,9	0,24

Hinges

plastic, lift-off, right

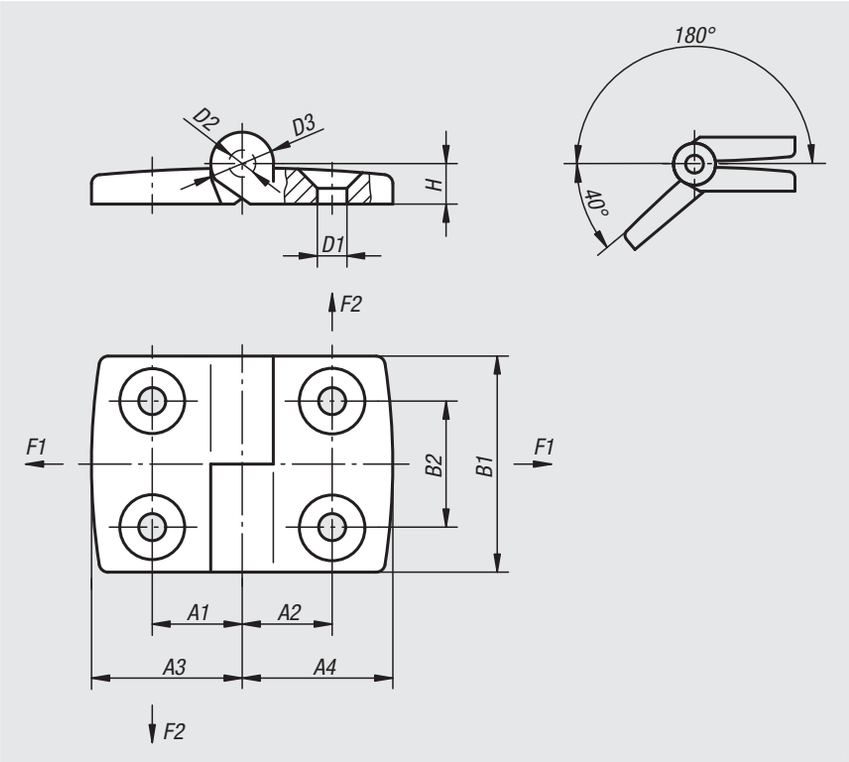

Material:
Fibreglass reinforced thermoplastic.
Hinge pin stainless steel.

Version:
Hinge black. Pin bright.

Sample order:
nlm 27850-2251523

Note:
All hinges can be supplied on request with guide tabs for the slots of aluminium profiles (slots 6, 8 and 10). They facilitate mounting, secure the hinge against twisting and make it stronger.

Order No.	A1	A2	A3	A4	B1	B2	D1	D2	D3	H	F1 max. kN	F2 max. kN
27850-2251515	15	15	26	26	48	28	6,6	6	14	9	0,625	0,425
27850-2251518	15	17,5	26	29,5	48	28	6,6	6	14	9	0,7	0,5
27850-2251520	15	20	26	35,5	48	28	6,6	6	14	9	0,7	0,4
27850-2251523	15	22,5	26	38,5	48	28	6,6	6	14	9	0,8	0,35
27850-2251525	15	25	26	43,5	48	28	6,6	6	14	9	0,8	0,325
27850-2251528	15	27,5	26	48,5	48	28	6,6	6	14	9	0,8	0,32
27850-2251533	15	32,5	26	57,5	48	28	6,6	6	14	9	0,8	0,24
27850-2301815	17,5	15	29,5	26	48	28	6,6	6	14	9	0,75	0,45
27850-2301818	17,5	17,5	29,5	29,5	48	28	6,6	6	14	9	0,75	0,5
27850-2301820	17,5	20	29,5	35,5	48	28	6,6	6	14	9	0,7	0,4
27850-2301823	17,5	22,5	29,5	38,5	48	28	6,6	6	14	9	0,8	0,35
27850-2301825	17,5	25	29,5	43,5	48	28	6,6	6	14	9	0,8	0,35
27850-2301828	17,5	27,5	29,5	48,5	48	28	6,6	6	14	9	0,8	0,35
27850-2301833	17,5	32,5	29,5	57,5	48	28	6,6	6	14	9	0,8	0,24
27850-2352015	20	15	35,5	26	48	28	6,6	6	14	9	0,7	0,4
27850-2352018	20	17,5	35,5	29,5	48	28	6,6	6	14	9	0,75	0,5
27850-2352020	20	20	35,5	35,5	48	28	6,6	6	14	9	0,75	0,4
27850-2352023	20	22,5	35,5	38,5	48	28	6,6	6	14	9	0,8	0,35
27850-2352025	20	25	35,5	43,5	48	28	6,6	6	14	9	0,8	0,35
27850-2352028	20	27,5	35,5	48,5	48	28	6,6	6	14	9	0,8	0,35
27850-2352033	20	32,5	35,5	57,5	48	28	6,6	6	14	9	0,8	0,24
27850-2402315	22,5	15	38,5	26	48	28	6,6	6	14	9	0,65	0,425
27850-2402318	22,5	17,5	38,5	29,5	48	28	6,6	6	14	9	0,75	0,5
27850-2402320	22,5	20	38,5	35,5	48	28	6,6	6	14	9	0,75	0,4
27850-2402323	22,5	22,5	38,5	38,5	48	28	6,6	6	14	9	0,8	0,35

Order No.	A1	A2	A3	A4	B1	B2	D1	D2	D3	H	F1 max. kN	F2 max. kN
27850-2402325	22,5	25	38,5	43,5	48	28	6,6	6	14	9	0,8	0,35
27850-2402328	22,5	27,5	38,5	48,5	48	28	6,6	6	14	9	0,8	0,35
27850-2402333	22,5	32,5	38,5	57,5	48	28	6,6	6	14	9	0,8	0,24
27850-2452515	25	15	43,5	26	48	28	6,6	6	14	9	0,65	0,425
27850-2452518	25	17,5	43,5	29,5	48	28	6,6	6	14	9	0,75	0,5
27850-2452520	25	20	43,5	35,5	48	28	6,6	6	14	9	0,7	0,4
27850-2452523	25	22,5	43,5	38,5	48	28	6,6	6	14	9	0,8	0,35
27850-2452525	25	25	43,5	43,5	48	28	6,6	6	14	9	0,8	0,325
27850-2452528	25	27,5	43,5	48,5	48	28	6,6	6	14	9	0,8	0,32
27850-2452533	25	32,5	43,5	57,5	48	28	6,6	6	14	9	0,8	0,24
27850-2502815	27,5	15	48,5	26	48	28	6,6	6	14	9	0,65	0,425
27850-2502818	27,5	17,5	48,5	29,5	48	28	6,6	6	14	9	0,75	0,5
27850-2502820	27,5	20	48,5	35,5	48	28	6,6	6	14	9	0,7	0,4
27850-2502823	27,5	22,5	48,5	38,5	48	28	6,6	6	14	9	0,8	0,35
27850-2502825	27,5	25	48,5	43,5	48	28	6,6	6	14	9	0,8	0,325
27850-2502828	27,5	27,5	48,5	48,5	48	28	6,6	6	14	9	0,8	0,32
27850-2502833	27,5	32,5	48,5	57,5	48	28	6,6	6	14	9	0,8	0,24
27850-2603315	32,5	15	57,5	26	48	28	6,6	6	14	9	0,65	0,425
27850-2603318	32,5	17,5	57,5	29,5	48	28	6,6	6	14	9	0,75	0,5
27850-2603320	32,5	20	57,5	35,5	48	28	6,6	6	14	9	0,7	0,4
27850-2603323	32,5	22,5	57,5	38,5	48	28	6,6	6	14	9	0,8	0,35
27850-2603325	32,5	25	57,5	43,5	48	28	6,6	6	14	9	0,8	0,325
27850-2603328	32,5	27,5	57,5	48,5	48	28	6,6	6	14	9	0,9	0,32
27850-2603333	32,5	32,5	57,5	57,5	48	28	6,6	6	14	9	0,9	0,24

Hinges

plastic

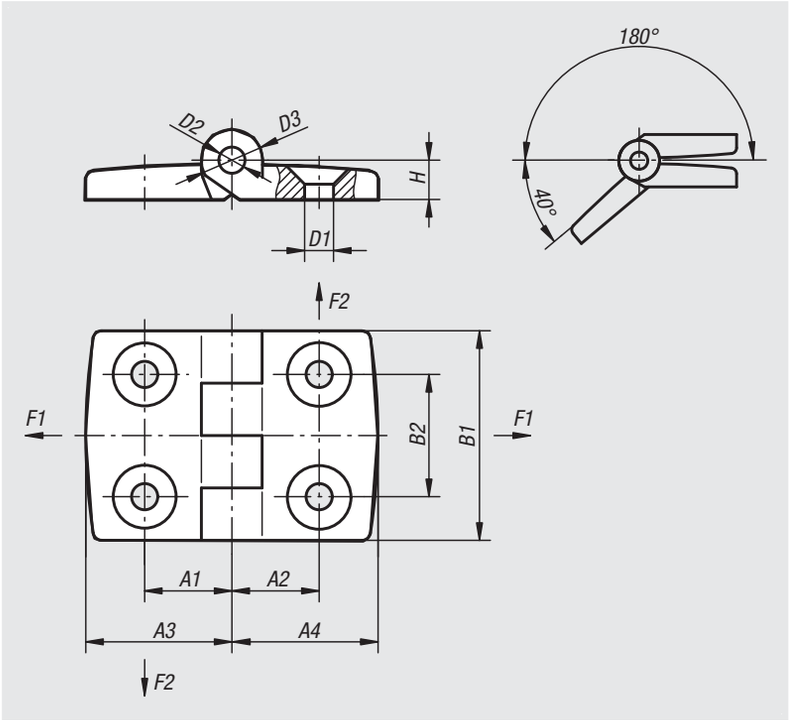

Material:
Fibreglass reinforced thermoplastic.
Hinge pin stainless steel.

Version:
Hinge black. Pin bright.

Sample order:
nlm 27852-251528

Note:
Unequal leaf hinges can be mounted left or right.
All hinges can be supplied on request with guide tabs for the slots of aluminium profiles (slots 6, 8 and 10). They facilitate mounting, secure the hinge against twisting and make it stronger.

Order No.	A1	A2	A3	A4	B1	B2	D1	D2	D3	H	F1 max. kN	F2 max. kN
27852-201212	11,5	11,5	19,5	19,5	30	14	4,2	3	8	5,5	0,4	0,2
27852-251515	15	15	26	26	48	28	6,6	6	14	9	0,625	0,425
27852-251518	15	17,5	26	29,5	48	28	6,6	6	14	9	0,7	0,5
27852-251520	15	20	26	35,5	48	28	6,6	6	14	9	0,7	0,4
27852-251523	15	22,5	26	38,5	48	28	6,6	6	14	9	0,8	0,35
27852-251525	15	25	26	43,5	48	28	6,6	6	14	9	0,8	0,325
27852-251528	15	27,5	26	48,5	48	28	6,6	6	14	9	0,8	0,32
27852-251533	15	32,5	26	57,5	48	28	6,6	6	14	9	0,8	0,24
27852-301818	17,5	17,5	29,5	29,5	48	28	6,6	6	14	9	0,7	0,4
27852-301820	17,5	20	29,5	35,5	48	28	6,6	6	14	9	0,7	0,4
27852-301823	17,5	22,5	29,5	38,5	48	28	6,6	6	14	9	0,75	0,45
27852-301825	17,5	25	29,5	43,5	48	28	6,6	6	14	9	0,75	0,45
27852-301828	17,5	27,5	29,5	48,5	48	28	6,6	6	14	9	0,9	0,425
27852-301833	17,5	32,5	29,5	57,5	48	28	6,6	6	14	9	0,85	0,2
27852-352020	20	20	35,5	35,5	48	28	6,6	6	14	9	0,7	0,4
27852-352023	20	22,5	35,5	38,5	48	28	6,6	6	14	9	0,75	0,45
27852-352025	20	25	35,5	43,5	48	28	6,6	6	14	9	0,75	0,45
27852-352028	20	27,5	35,5	48,5	48	28	6,6	6	14	9	0,8	0,425
27852-352033	20	32,5	35,5	57,5	48	28	6,6	6	14	9	0,8	0,175
27852-402323	22,5	22,5	38,5	38,5	48	28	6,6	6	14	9	0,75	0,45
27852-402325	22,5	25	38,5	43,5	48	28	6,6	6	14	9	0,75	0,45
27852-402328	22,5	27,5	38,5	48,5	48	28	6,6	6	14	9	0,8	0,425
27852-402333	22,5	32,5	38,5	57,5	48	28	6,6	6	14	9	0,85	0,175
27852-452525	25	25	43,5	43,5	48	28	6,6	6	14	9	0,75	0,45
27852-452528	25	27,5	43,5	48,5	48	28	6,6	6	14	9	0,8	0,425
27852-452533	25	32,5	43,5	57,5	48	28	6,6	6	14	9	0,85	0,2
27852-502828	27,5	27,5	48,5	48,5	48	28	6,6	6	14	9	0,8	0,425
27852-502833	27,5	32,5	48,5	57,5	48	28	6,6	6	14	9	0,85	0,2
27852-603333	32,5	32,5	57,5	57,5	48	28	6,6	6	14	9	0,85	0,175

Hinges

plastic, with locking lever

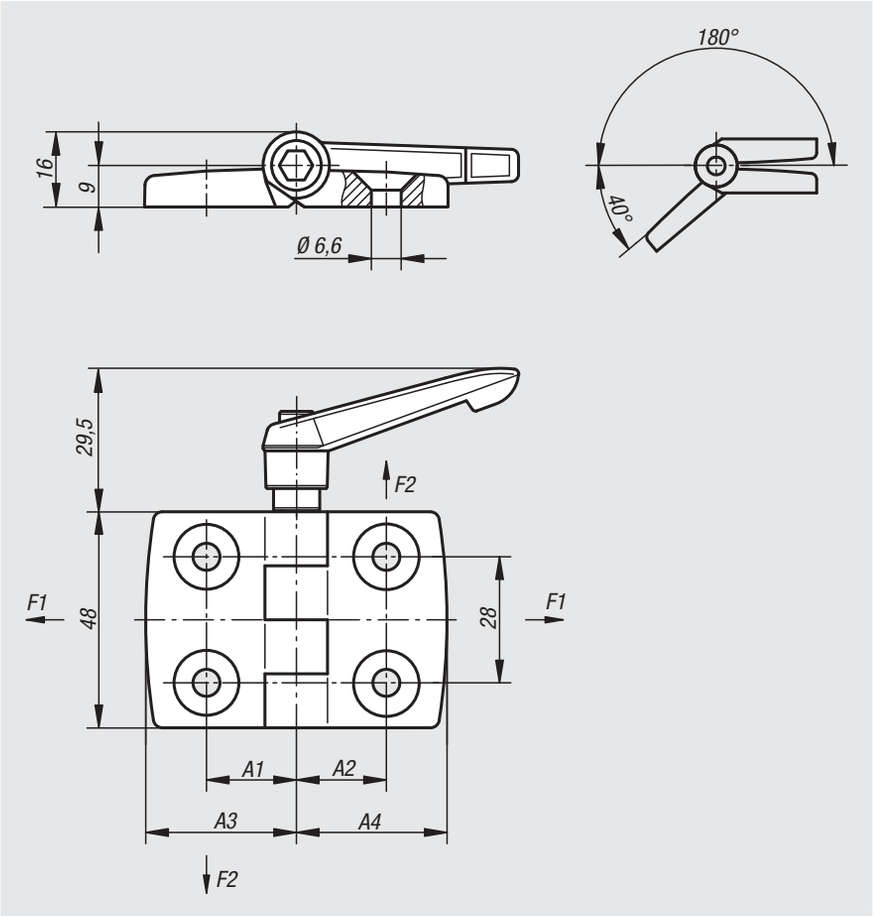

Material:
Hinge and lever fibreglass reinforced thermoplastic.
Hinge pin steel.
Mechanism steel.

Version:
Hinge black.
Pin galvanized.
Locking lever black.
Mechanism black galvanized.

Sample order:
nlm 27853-251515

Note:
The indexable lever allows the hinge to be locked in any position.

On request:
Hinges with guide tabs (slot 6, 8 and 10) for aluminium profiles.
Unequal leaf combinations.

Order No.	A1	A2	A3	A4	F1 max. kN	F2 max. kN
27853-251515	15	15	26	26	0,5	0,38
27853-301818	17,5	17,5	29,5	29,5	0,7	0,4
27853-352020	20	20	36	36	0,7	0,4
27853-402323	22,5	22,5	38,5	38,5	0,75	0,45
27853-452525	25	25	43,5	43,5	0,75	0,45
27853-502828	27,5	27,5	48,5	48,5	0,8	0,425
27853-603333	32,5	32,5	57,5	57,5	0,85	0,175

Hinges

plastic, with elongated holes

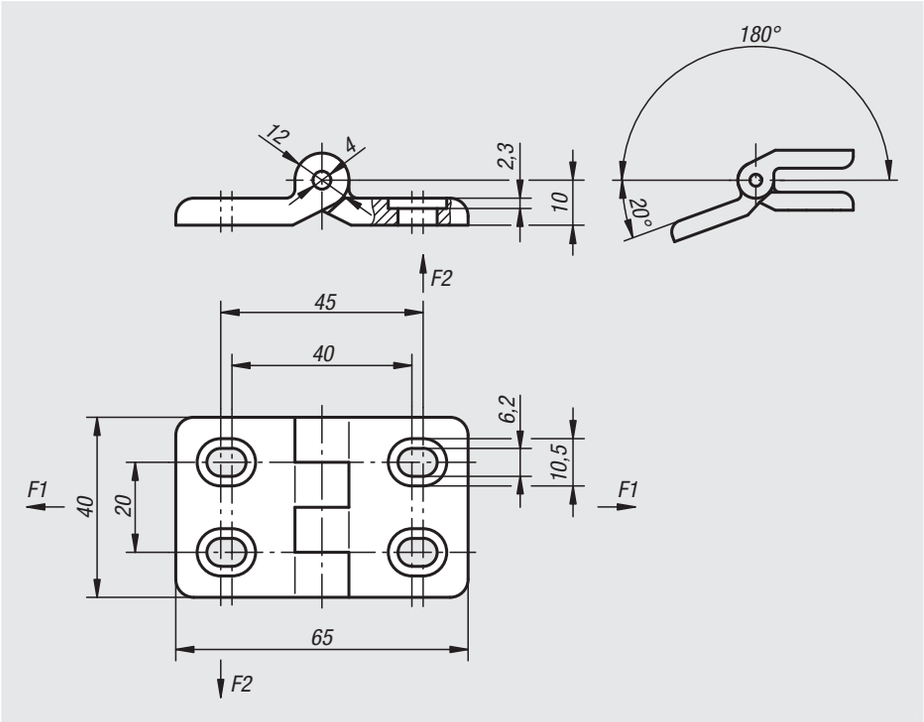

Material:
Fibreglass reinforced thermoplastic.
Hinge pin stainless steel.

Version:
Hinge black. Pin bright.

Sample order:
nlm 27854-402020

Note:
Elongated holes allow easy horizontal adjustment.

Order No.	F1 max. kN	F2 max. kN
27854-402020	0,5	0,3

Hinges

plastic with fastening holes

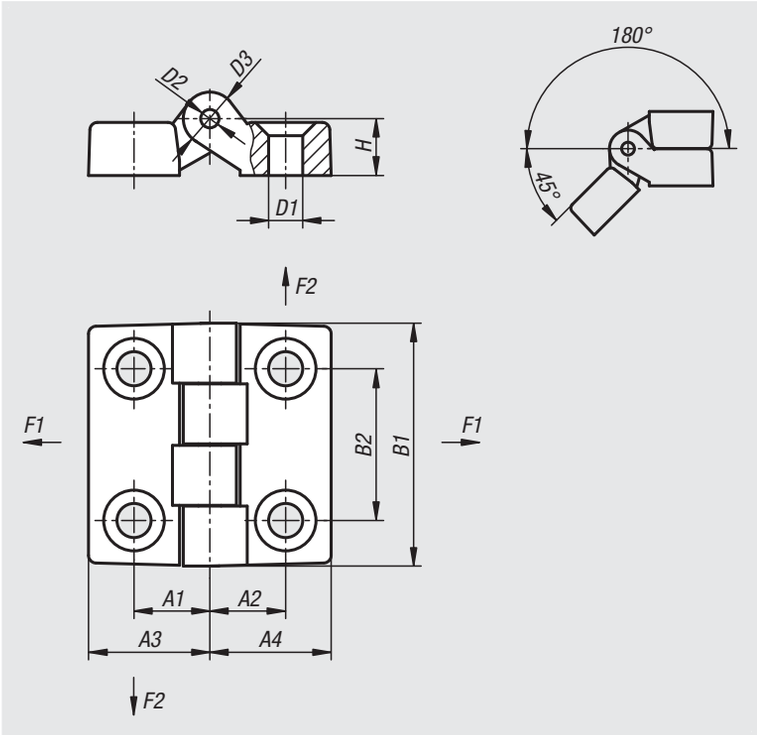

Material:
Fibreglass reinforced thermoplastic.
Hinge pin steel.

Version:
Hinge black.
Hinge pin galvanised.

Sample order:
nlm 27855-004161010

Note:
Hinge with fastening holes
for countersunk screw DIN 7991/UNI 5933.

Order No.	A1	A2	A3	A4	B1	B2	D1	D2	D3	H	F1 N	F2 N
27855-004161010	10	10	16	16	32	20	4,5	3	7	7	1440	490
27855-006241515	15	15	24	24	48	30	6,5	5	10	10,5	1960	1470
27855-006322020	20	20	32	32	64	40	6,5	5	12	13	2850	1520
27855-008483232	31,5	31,5	48	48	96	60	8,5	8	16	16	4300	1810
27855-010483232	31,5	31,5	48	48	96	60	10,5	8	16	16	4300	1810

Hinges

plastic, lift-off, with guide tabs

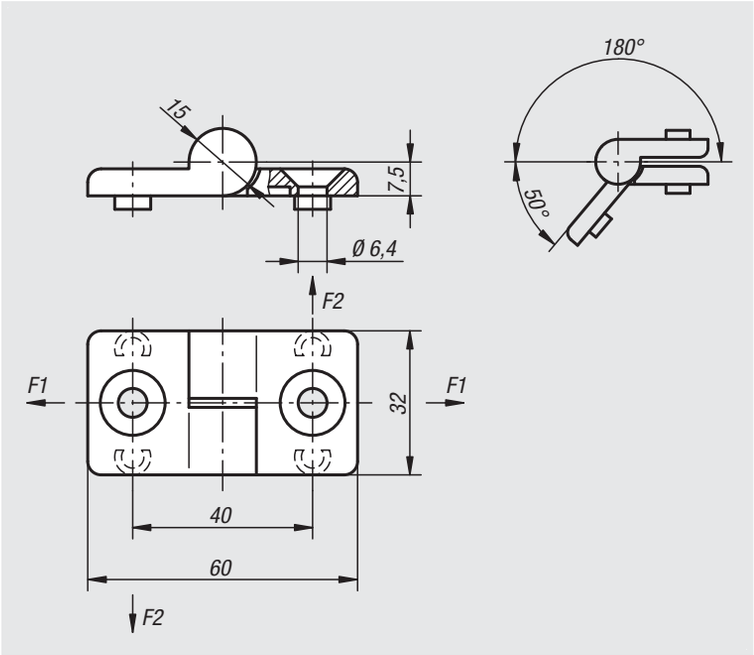

Material:
Fibreglass reinforced thermoplastic.
Hinge pin stainless steel.
Washer thermoplastic.

Version:
Hinge and washer black. Pin bright.

Sample order:
nlm 27856-1322020

Note:
The guide tabs permit the hinges to be mounted in slots (8 mm).

Order No.	Version	F1 max. kN	F2 max. kN
27856-1322020	left	0,2	0,1
27856-2322020	right	0,2	0,1

Hinges

plastic, detent

Material:
Hinge and caps fibreglass reinforced PA thermoplastic.
Hinge pin stainless steel.

Version:
Hinge and caps black.
Pin bright.

Sample order:
nlm 27857-56181800

Note:
These hinges have a detent mechanism. This mechanism holds a door or lid open at three different angles or tightly closed. The hinges are available with or without guide tabs for aluminium profile slots. The tabs locate the hinge in the slot and prevent twisting.

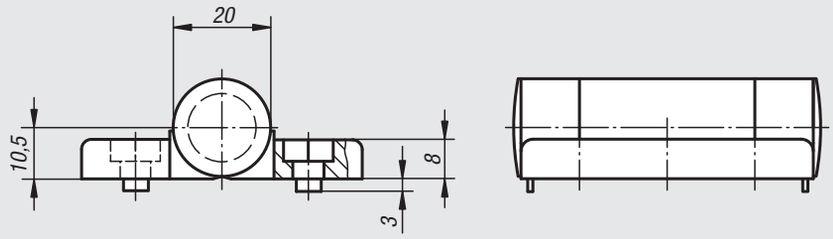

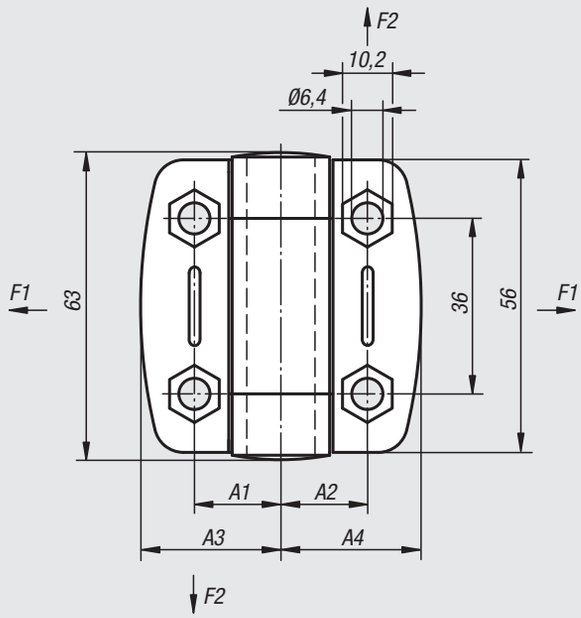

indexed positions

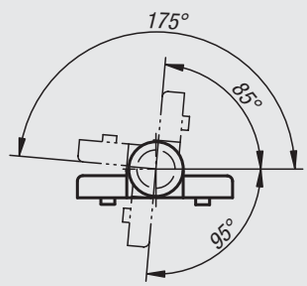

Order No.	A1	A2	A3	A4	Guide tabs for slot	F1 max. kN	F2 max. kN
27857-56181800	17,75	17,75	27	27	-	0,4	0,35
27857-56181806	17,75	17,75	27	27	6	0,4	0,35
27857-56181808	17,75	17,75	27	27	8	0,4	0,35
27857-56232300	22,75	22,75	36,75	36,75	-	0,6	0,425
27857-56232308	22,75	22,75	36,75	36,75	8	0,6	0,425
27857-56232310	22,75	22,75	36,75	36,75	10	0,6	0,425

Hinges

plastic, with adjustable friction

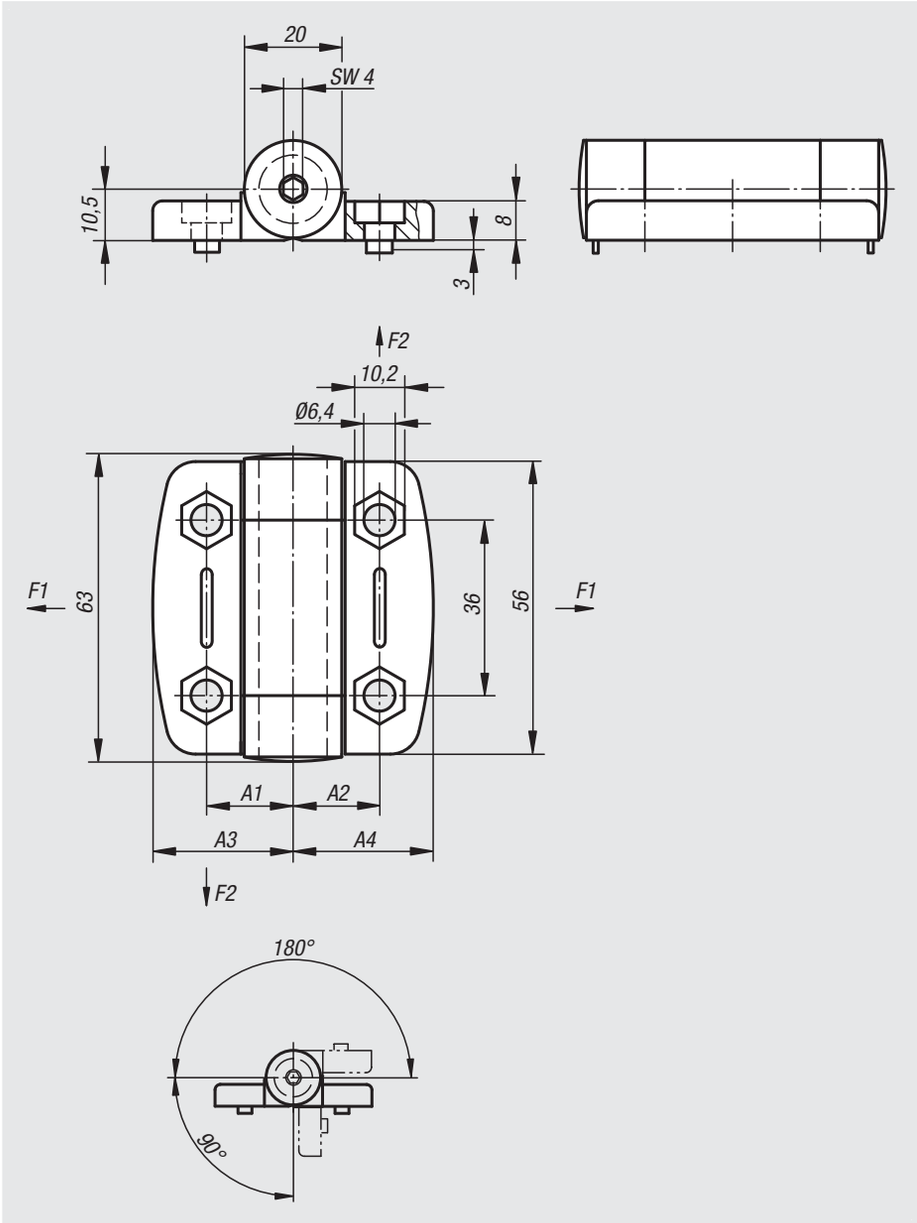

Material:
Hinge and caps, fibreglass reinforced PA thermoplastic.
Metal parts stainless steel.

Version:
Hinge and caps black.
Metal parts bright.

Sample order:
nlm 27858-56181800

Note:
These friction hinges allow doors or lids to remain open in any position. A set screw allows the amount of friction to be infinitely adjusted between 0-5 Nm. The hinges are available with or without guide tabs for aluminium profile slots. The tabs locate the hinge in the slot and prevent twisting.

Order No.	A1	A2	A3	A4	Guide tabs for slot	F1 max. kN	F2 max. kN
27858-56181800	17,75	17,75	27	27	-	0,4	0,325
27858-56181806	17,75	17,75	27	27	6	0,4	0,325
27858-56181808	17,75	17,75	27	27	8	0,4	0,325
27858-56232300	22,75	22,75	36,75	36,75	-	0,6	0,425
27858-56232308	22,75	22,75	36,75	36,75	8	0,6	0,425
27858-56232310	22,75	22,75	36,75	36,75	10	0,6	0,425

Hinges

aluminium, with adjustable friction

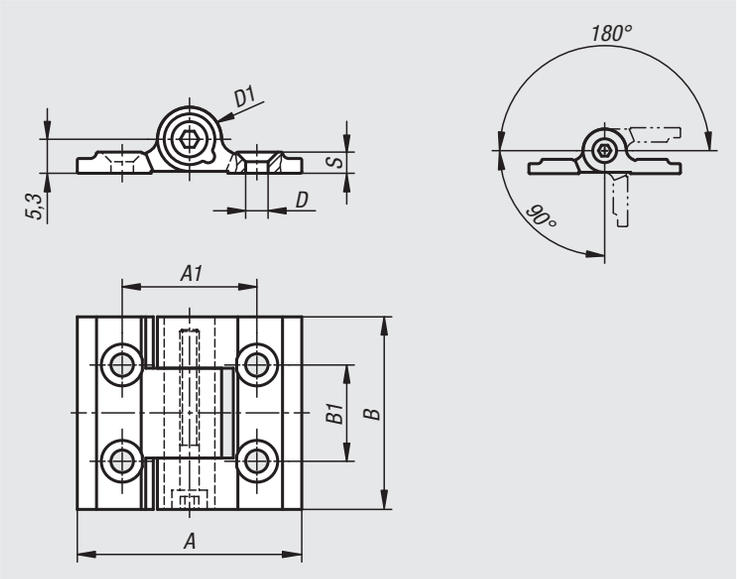

Material:
Aluminium 6060 T5.
End caps PA 6.6.
Washers POM.

Version:
Black anodized

Sample order:
nlm 27859-35301

Note:
These friction hinges allow doors to remain open at any desired angle. A set screw allows the amount of friction to be infinitely adjusted between 0–1 Nm. Opening angle 270°.

Max. tensile strength: 2240 N
Max. shear strength: 1050 N

Fastened using DIN 7991 countersunk screws.

Temperature range:
From -20°C to +80°C

Order No.	A	A1	B	B1	D	D1	S
27859-35301	35	21	30	15	3,5	10	3,3

Hinges

aluminium, with adjustable friction

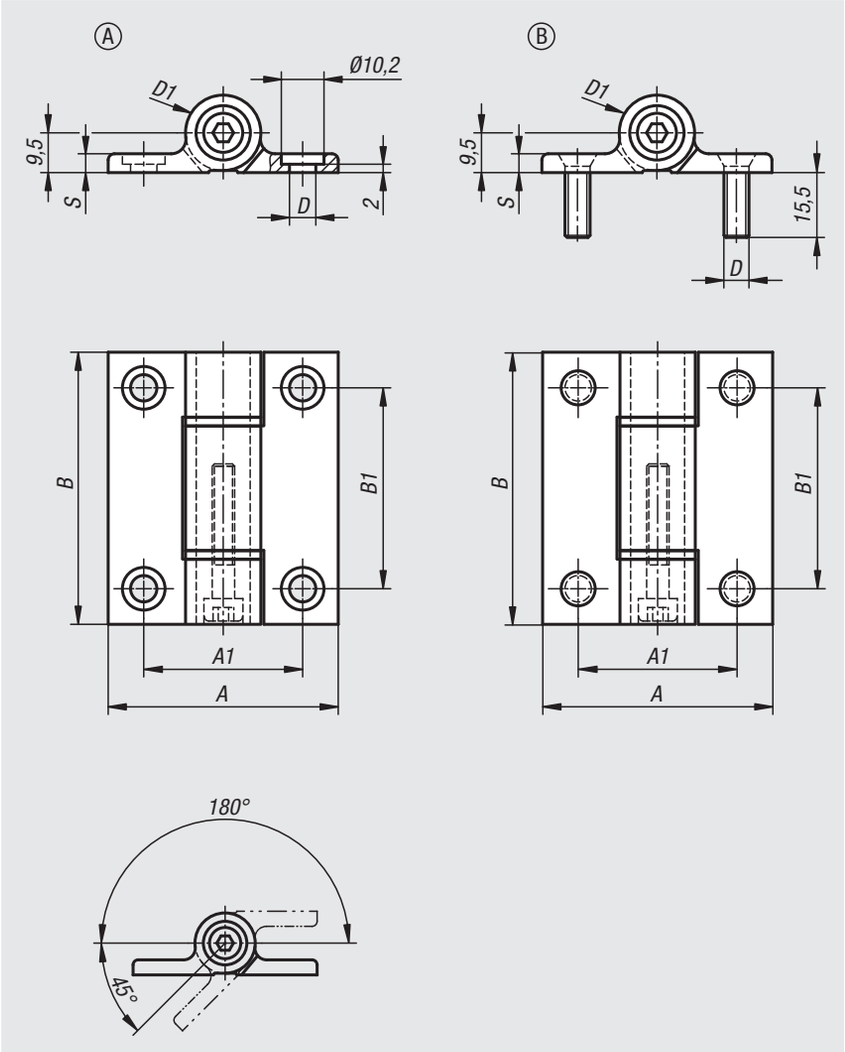

Material:
Aluminium 6060 T5.
Sleeve POM.
Set screw stainless steel.
Washers PA.
Fastening screws steel.

Version:
Black anodised.
Fastening screws galvanised.

Sample order:
nlm 27860-55651

Note:
These friction hinges allow doors to remain open at any desired angle. A set screw allows the amount of friction to be infinitely adjusted between 0–5 Nm.
Opening angle 225°.

Max. tensile strength: 6000 N
Max. shear strength: 5000 N

Temperature range:
From -20°C to +80°C

Accessories:
Socket head screws with hexagon socket DIN 912/EN ISO 4762

Drawing reference:
Form A: fastened using DIN 912/EN ISO 4762 socket head screws.
Form B: fastened using threaded pins.

Order No.	Form	A	A1	B	B1	D	D1	S
27860-55651	A	55	38	65	48	6,3	18	4,5
27860-556511	B	55	38	65	48	6,3	18	4,5

Hinges

aluminium, with detent

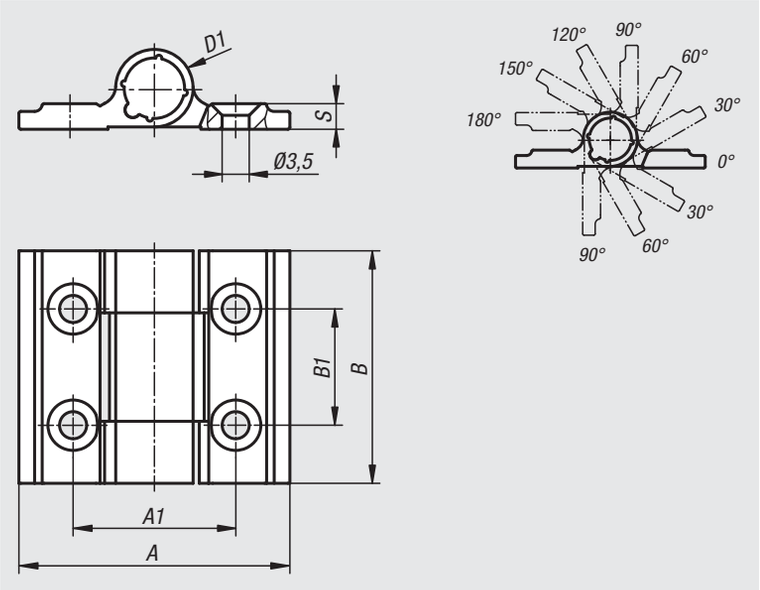

Material:
Aluminium 6060 T5.
Screws and nuts stainless steel.
Washers PA.

Version:
Black anodized

Sample order:
nlm 27861-35301

Note:
These hinges have a detent mechanism that indexes every 30° from 0° to 270° and holds doors or hatches open or tightly closed.
The detent torque is not adjustable.
Torque tolerance ±20%

Fastened using DIN 7991 countersunk screws.

Temperature range:
From -30°C to +70°C

Order No.	A	A1	B	B1	D	D1	S	Max. torque Nm
27861-35301	35	21	30	15	3,5	10	3,3	0,3

Hinges

aluminium, with detent

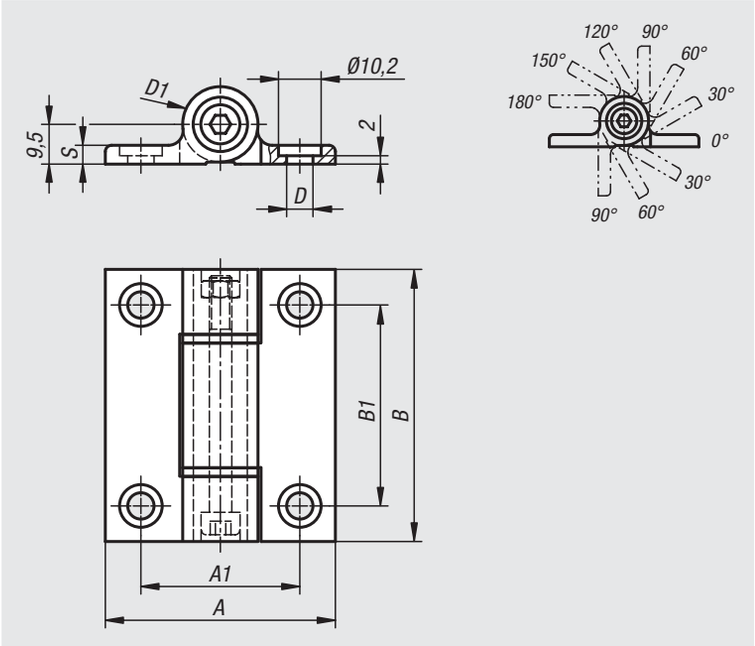

Material:
Aluminium 6060 T5.
Screws and nuts stainless steel.
Washers PA.

Version:
Black anodized

Sample order:
nlm 27862-556711

Note:
These hinges have a detent mechanism that indexes every 30° from 0° to 270° and holds doors or hatches open or tightly closed. The detent torque is not adjustable.

The hinges have a more than 30000 cycle service life.
Torque tolerance ±20%

Fastened using DIN 912/EN ISO 4762 socket head screws.

Temperature range:
From -30°C to +70°C

Accessories:
Socket head screws with hexagon socket DIN 912/EN ISO 4762

Order No.	A	A1	B	B1	D	D1	S	Max. torque Nm
27862-556711	55	38	67	48	6,3	18	4,5	1,8
27862-556712	55	38	67	48	6,3	18	4,5	2,5
27862-556713	55	38	67	48	6,3	18	4,5	3,2
27862-556715	55	38	67	48	6,3	18	4,5	5

Hinges

die-cast zinc, with elongated holes

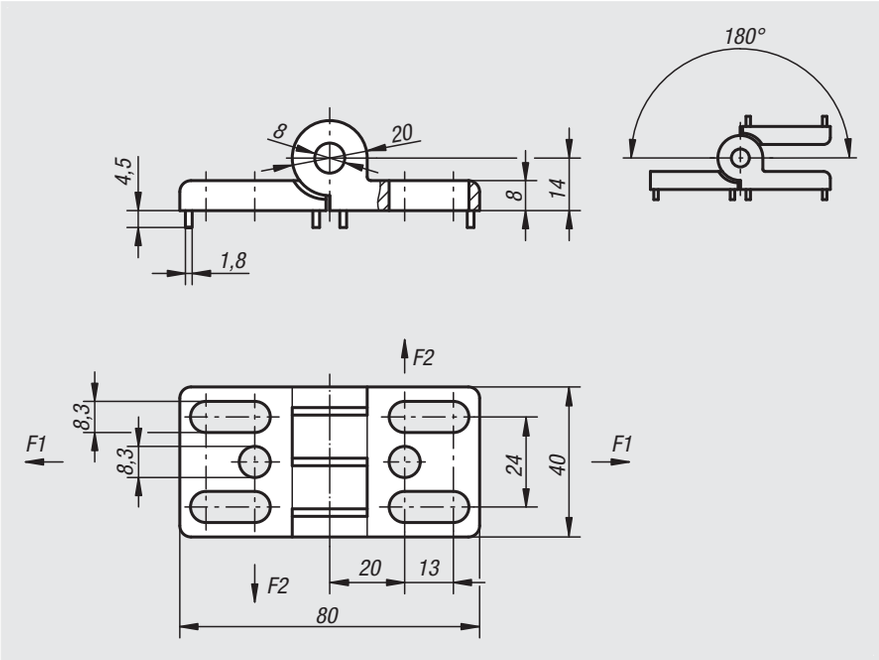

Material:
Die-cast zinc.
Hinge pin stainless steel.
Washer thermoplastic.

Version:
Hinge black powder-coated.
Pin bright.
Washer black.

Sample order:
nlm 27865-402020

Note:
Elongated holes allow easy horizontal adjustment.

Order No.	Guide tabs for slot	F1 max. kN	F2 max. kN
27865-402020	-	1,2	0,5
27865-40202008	8	1,2	0,5
27865-40202010	10	1,2	0,5

Hinges

die-cast zinc, with locking lever

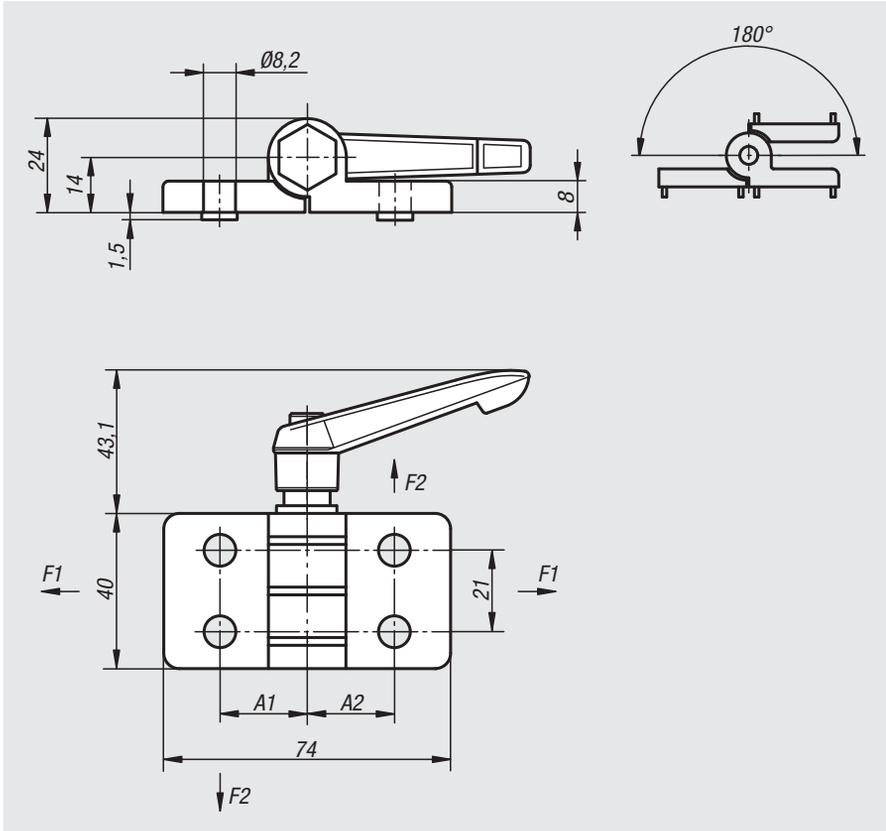

Material:
Hinge die-cast zinc.
Hinge pin steel.
Lever fibreglass reinforced thermoplastic.
Mechanism steel.

Version:
Hinge black powder-coated.
Pin galvanized.
Lever black.
Mechanism black galvanized.

Sample order:
nlm 27868-40232300

Note:
The indexable lever allows the hinge to be locked in any position.
Available with or without guide tabs for aluminium profile slots. The tabs locate the hinge in the slot and prevent twisting.

Order No.	A1	A2	Guide tabs for slot	F1 max. kN	F2 max. kN
27868-40232300	22,5	22,5	-	1,5	0,65
27868-40232308	22,5	22,5	8	1,5	0,65
27868-40232310	22,5	22,5	10	1,5	0,65
27868-40232500	22,5	25	-	1,5	0,65
27868-40232508	22,5	25	8	1,5	0,65
27868-40232510	22,5	25	10	1,5	0,65
27868-45252500	25	25	-	1,5	0,65
27868-45252508	25	25	8	1,5	0,65
27868-45252510	25	25	10	1,5	0,65

Hinges

aluminium, lift-off, left

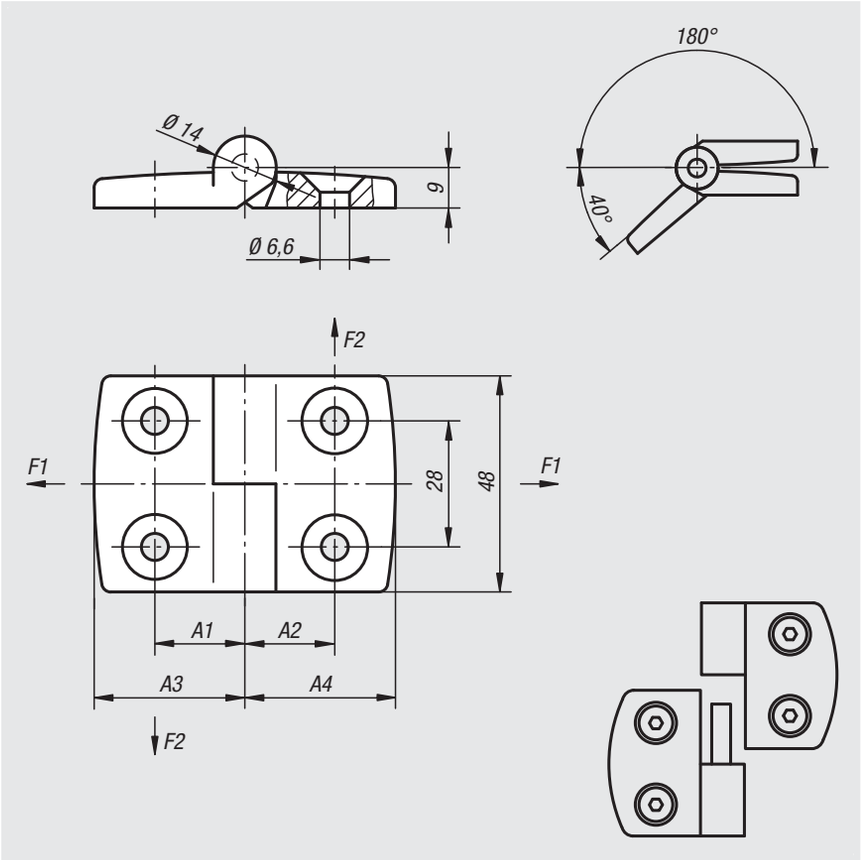

Material:
Die-cast aluminium.
Hinge pin stainless steel.

Version:
Hinge matt nickel-plated.
Pin bright.

Sample order:
nlm 27870-1251515

Note:
Hinges for panel elements and aluminium profiles.
The hinges can be fitted with a plastic spacer ring on the hinge pin.

On request:
Hinges with guide tabs for aluminium profiles (slots 5, 6, 8, 10, 12 and 14).
Unequal leaf combinations.

Order No.	A1	A2	A3	A4	F1 max. kN	F2 max. kN
27870-1251515	15	15	26	26	0,41	0,25
27870-1301818	17,5	17,5	29,5	29,5	0,45	0,28
27870-1352020	20	20	36	36	0,5	0,25
27870-1402323	22,5	22,5	38,5	38,5	0,55	0,2
27870-1452525	25	25	43,5	43,5	0,55	0,2
27870-1502828	27,5	27,5	48,5	48,5	0,55	0,175
27870-1603333	32,5	32,5	57,5	57,5	0,575	0,15

Hinges

aluminium, lift-off, right

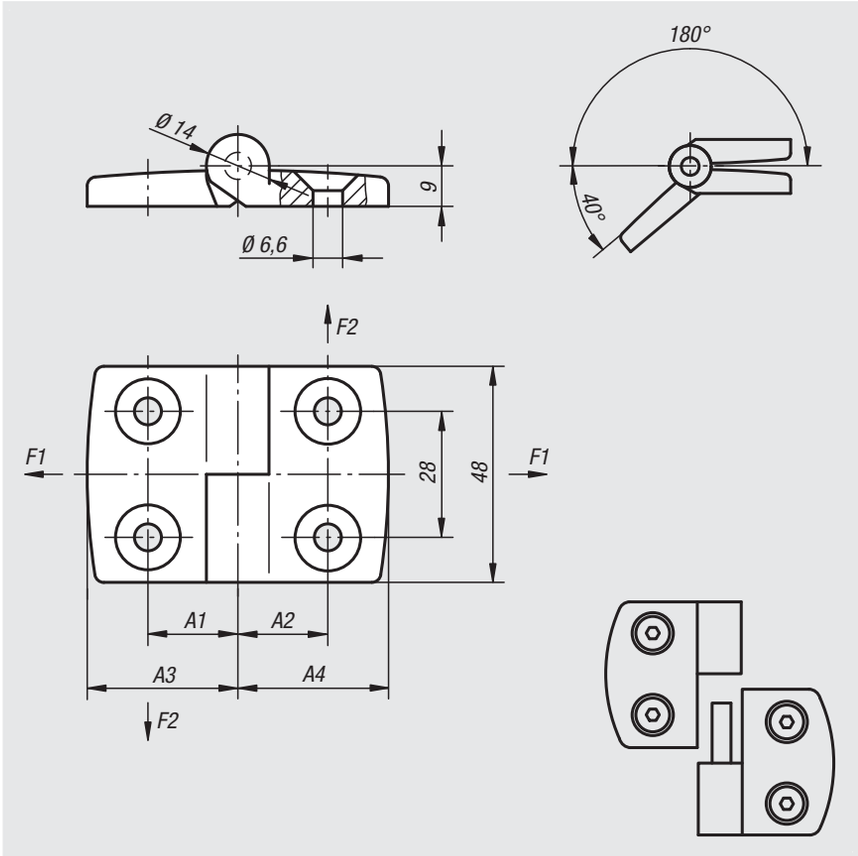

Material:
Die-cast aluminium.
Hinge pin stainless steel.

Version:
Hinge matt nickel-plated.
Pin bright.

Sample order:
nlm 27870-2251515

Note:
Hinges for panel elements and aluminium profiles.
The hinges can be fitted with a plastic spacer ring on the hinge pin.

On request:
Hinges with guide tabs for aluminium profiles (slots 5, 6, 8, 10, 12 and 14).
Unequal leaf combinations.

Order No.	A1	A2	A3	A4	F1 max. kN	F2 max. kN
27870-2251515	15	15	26	26	0,41	0,25
27870-2301818	17,5	17,5	29,5	29,5	0,45	0,28
27870-2352020	20	20	36	36	0,5	0,25
27870-2402323	22,5	22,5	38,5	38,5	0,55	0,2
27870-2452525	25	25	43,5	43,5	0,55	0,2
27870-2502828	27,5	27,5	48,5	48,5	0,55	0,175
27870-2603333	32,5	32,5	57,5	57,5	0,575	0,15

Hinges lift-off

stainless steel

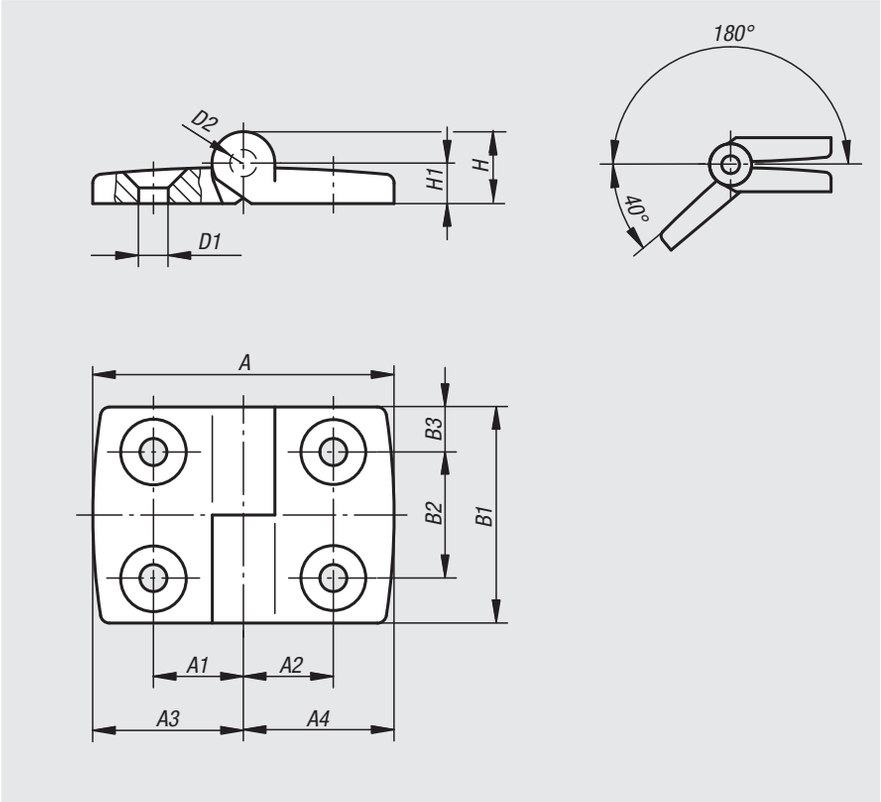

Material:
Hinge stainless steel 1.4401.
Pin stainless steel 1.4104.

Version:
High-gloss polished.

Sample order:
nlm 27870-01-06261515

Note:
Lift-off hinge for panel elements and aluminium profiles. Pin end closed. Countersunk holes to minimize dirt accumulation.

Order No.	A	A1	A2	A3	A4	B1	B2	B3	D1	D2	H	H1	Load capacity N
27870-01-06261515	52	15	15	26	26	48	28	10	6,6	6	16	9	5000
27870-01-06301818	59	17,5	17,5	29,5	29,5	48	28	10	6,6	6	16	9	5000
27870-01-06392323	77	22,5	22,5	38,5	38,5	48	28	10	6,6	6	16	9	5000
27870-01-06442525	87	25	25	43,5	43,5	48	28	10	6,6	6	16	9	5000
27870-01-06583333	115	32,5	32,5	57,5	57,5	48	28	10	6,6	6	16	9	5000

Hinges

aluminium

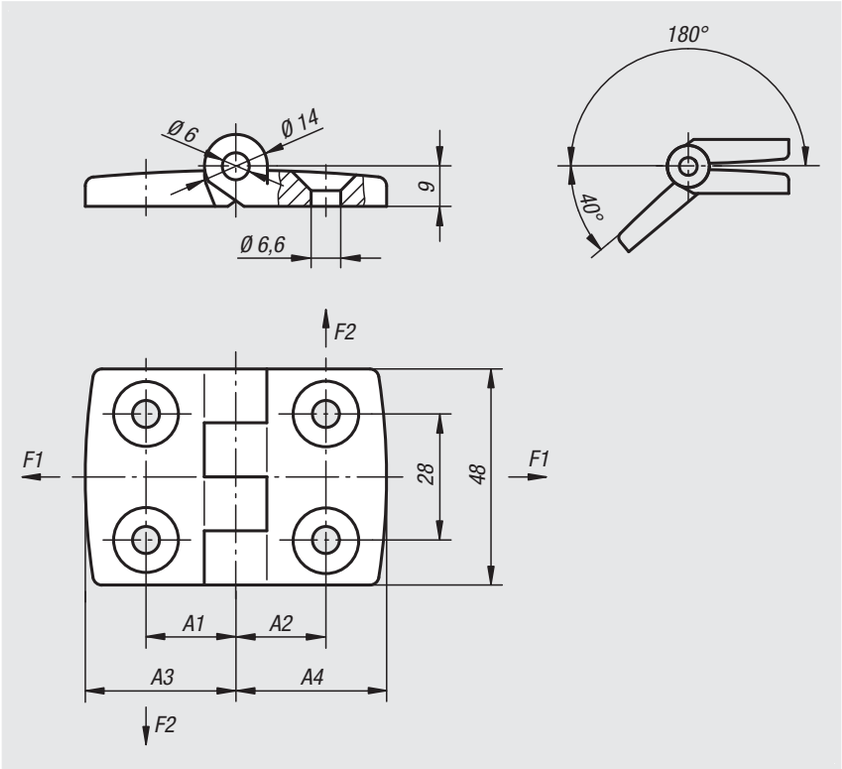

Material:
Die-cast aluminium.
Hinge pin stainless steel.

Version:
Hinge matt nickel-plated.
Pin bright.

Sample order:
nlm 27872-251515

Note:
Hinges for panel elements and aluminium profiles, non lift-off.
The hinges can be fitted with a plastic spacer on the hinge pin.

On request:
Hinges with guide tabs for aluminium profiles (slots 5, 6, 8, 10, 12 and 14).
Unequal leaf combinations.

Order No.	A1	A2	A3	A4	F1 max. kN	F2 max. kN
27872-251515	15	15	26	26	0,275	0,215
27872-301818	17,5	17,5	29,5	29,5	0,325	0,225
27872-352020	20	20	36	36	0,325	0,225
27872-402323	22,5	22,5	38,5	38,5	0,4	0,25
27872-452525	25	25	43,5	43,5	0,4	0,25
27872-502828	27,5	27,5	48,5	48,5	0,4	0,25
27872-603333	32,5	32,5	57,5	57,5	0,4	0,1

Hinges

stainless steel

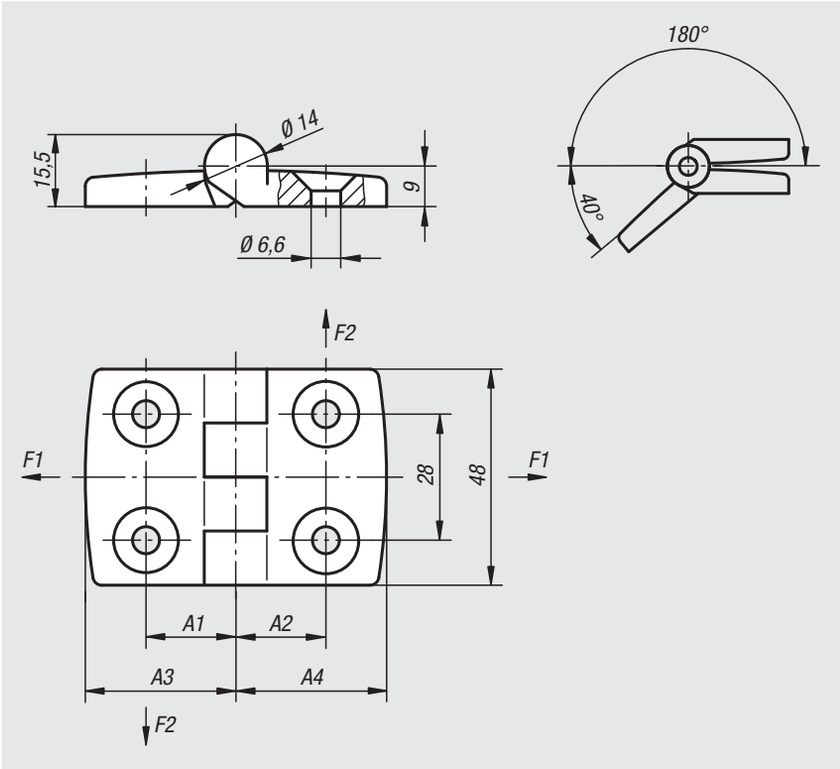

Material:
Stainless steel 1.4401.

Version:
Polished.

Sample order:
nlm 27875-062615151

Note:
Hinges for panel elements and aluminium profiles.

Order No.	A1	A2	A3	A4	F1 max. kN	F2 max. kN
27875-062615151	15	15	26	26	0,7	0,560
27875-063018181	17,5	17,5	29,5	29,5	0,8	0,575
27875-064023231	22,5	22,5	38,5	38,5	0,9	0,675
27875-064525251	25	25	42,5	42,5	0,9	0,675
27875-066033331	32,5	32,5	56,5	56,5	0,9	0,260

Hinges

stainless steel

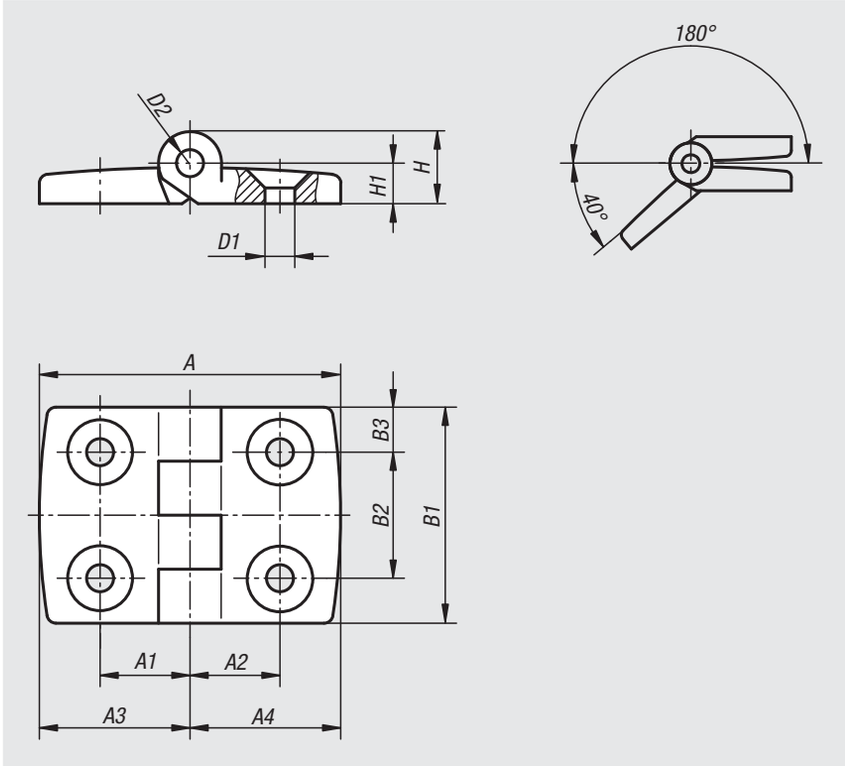

Material:
Hinge stainless steel 1.4401.
Pin stainless steel 1.4104.

Version:
High-gloss polished.

Sample order:
nlm 27875-01-04191212

Note:
Fixed hinge for surface elements and aluminium profiles. Pin end closed. Countersunk holes to minimize dirt accumulation.

Order No.	A	A1	A2	A3	A4	B1	B2	B3	D1	D2	H	H1	Load capacity N
27875-01-04191212	38	11,5	11,5	19	19	30	14	8	4,5	3	9,5	5,5	1000

Hinges lift-off

stainless steel

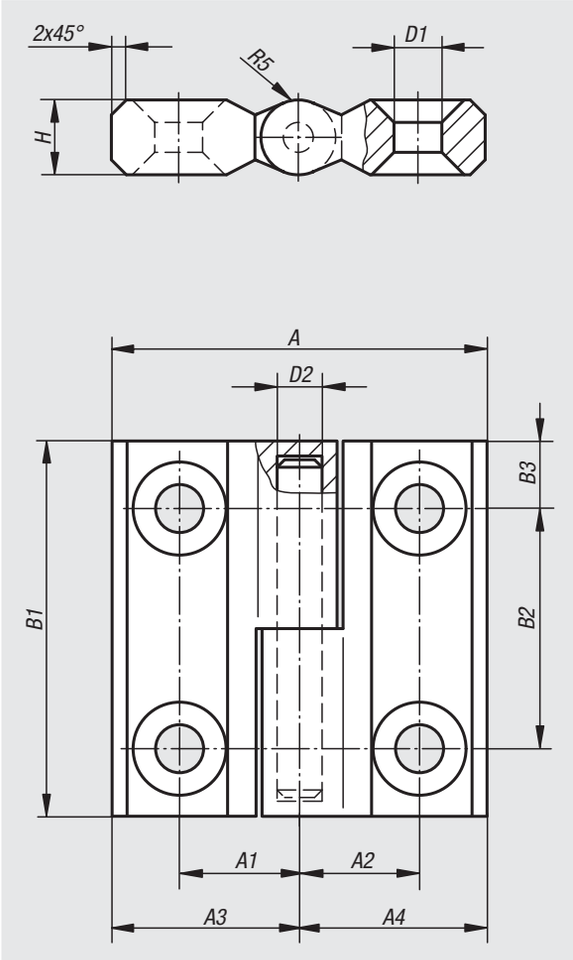

Material:
Hinge and pin stainless steel 1.4401.

Version:
Satin finished.

Sample order:
nlm 27875-89-06251616

Note:
This double symmetry hinge can be mounted right or left.
The opening angle is max. 125°.

Order No.	A	A1	A2	A3	A4	B1	B2	B3	D1	D2	H	Load capacity N
27875-89-06251616	50	16	16	25	25	50	32	9	6,4	6	10	5000

Hinges

stainless steel

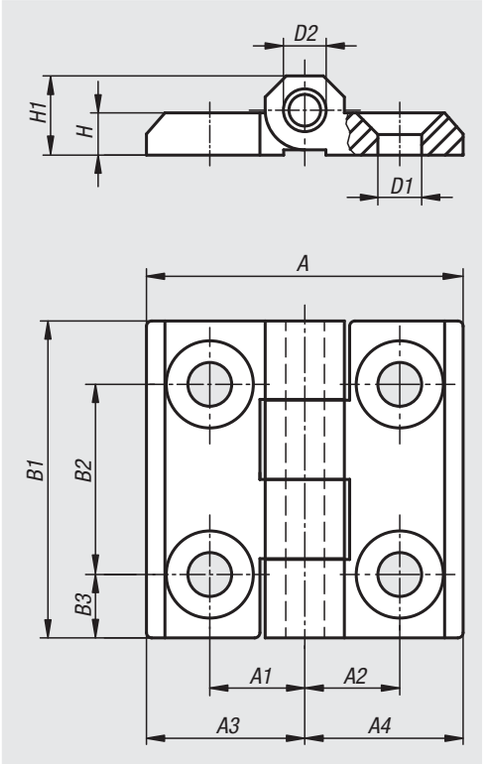

Material:
Stainless steel 1.4401.

Version:
Satin finished.

Sample order:
nlm 27875-90-05201313

Note:
Hinge for extreme loads.
For right or left use.
Opening angle 270°.
Fastening with countersunk screws i.e. per DIN 7991.

Order No.	A	A1	A2	A3	A4	B1	B2	B3	D1	D2	H	H1	Load capacity N
27875-90-05201313	40	12,5	12,5	20	20	40	25	7,5	5,2	4	5	9	2500
27875-90-06251515	50	15	15	25	25	50	30	10	6,2	6	6	11,5	5000
27875-90-08301818	60	18	18	30	30	60	36	12	8,3	8	8	15	8000
27875-90-06381528	63	28	15	38	25	50	30	10	6,5	6	6	11,5	5000
27875-90-06382828	76	28	28	38	38	50	30	10	6,5	6	6	11,5	5000

Hinges

stainless steel

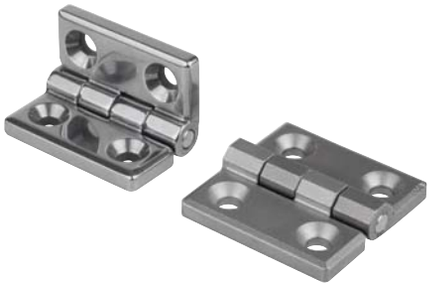

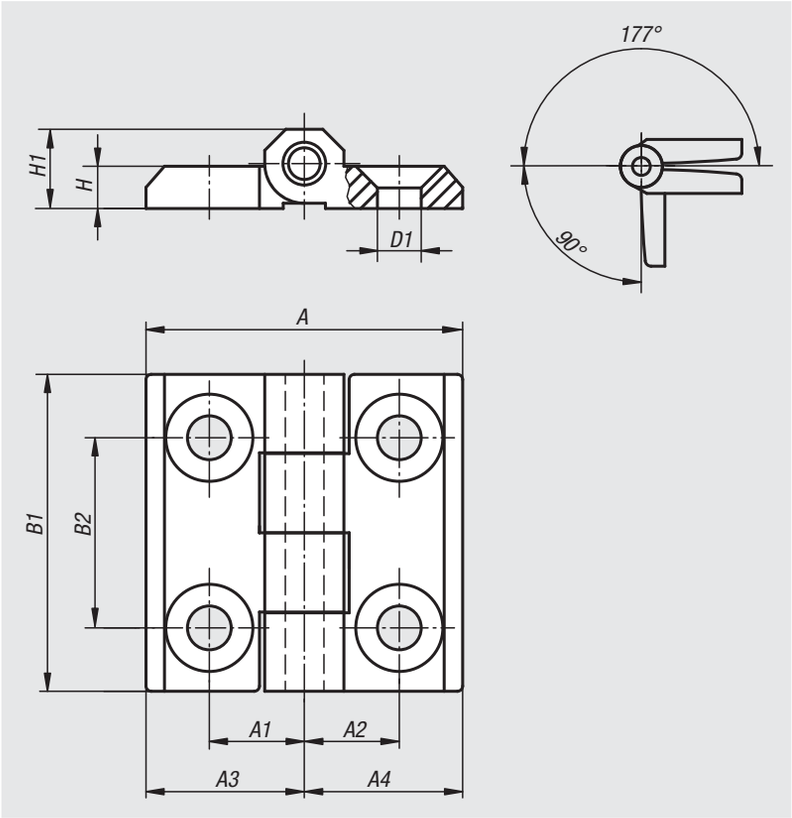

Material:
Stainless steel 1.4401.

Version:
Polished or blasted.

Sample order:
nlm 27876-052013131

Note:
Hinges with fixed pin and countersunk holes.

Order No.	Version	A	A1	A2	A3	A4	B1	B2	D1	H	H1
27876-052013130	polished	39	12,5	12,5	19,5	19,5	39	25	5,5	4	9
27876-052013131	blasted	39	12,5	12,5	19,5	19,5	39	25	5,5	4	9
27876-062515150	polished	50	15	15	25	25	50	30	6,5	6	12
27876-062515151	blasted	50	15	15	25	25	50	30	6,5	6	12
27876-083018180	polished	60	18	18	30	30	60	36	8,5	8	15
27876-083018181	blasted	60	18	18	30	30	60	36	8,5	8	15

Single leaf hinges

adjustable, stainless steel

Material:
Stainless steel 1.4571

Version:
Satin finished.

Sample order:
nlm 27876-01-06884617

Note:
Single leaf hinge for inwards opening doors, screws on from outside. A screw on the hinge pin allows height adjustment of ±4 mm.
The addition of titanium in stainless steel 1.4571 increases the corrosion resistance.
The opening angle is max. 180°.

Drawing reference:
1) grub screw M4, DIN 916

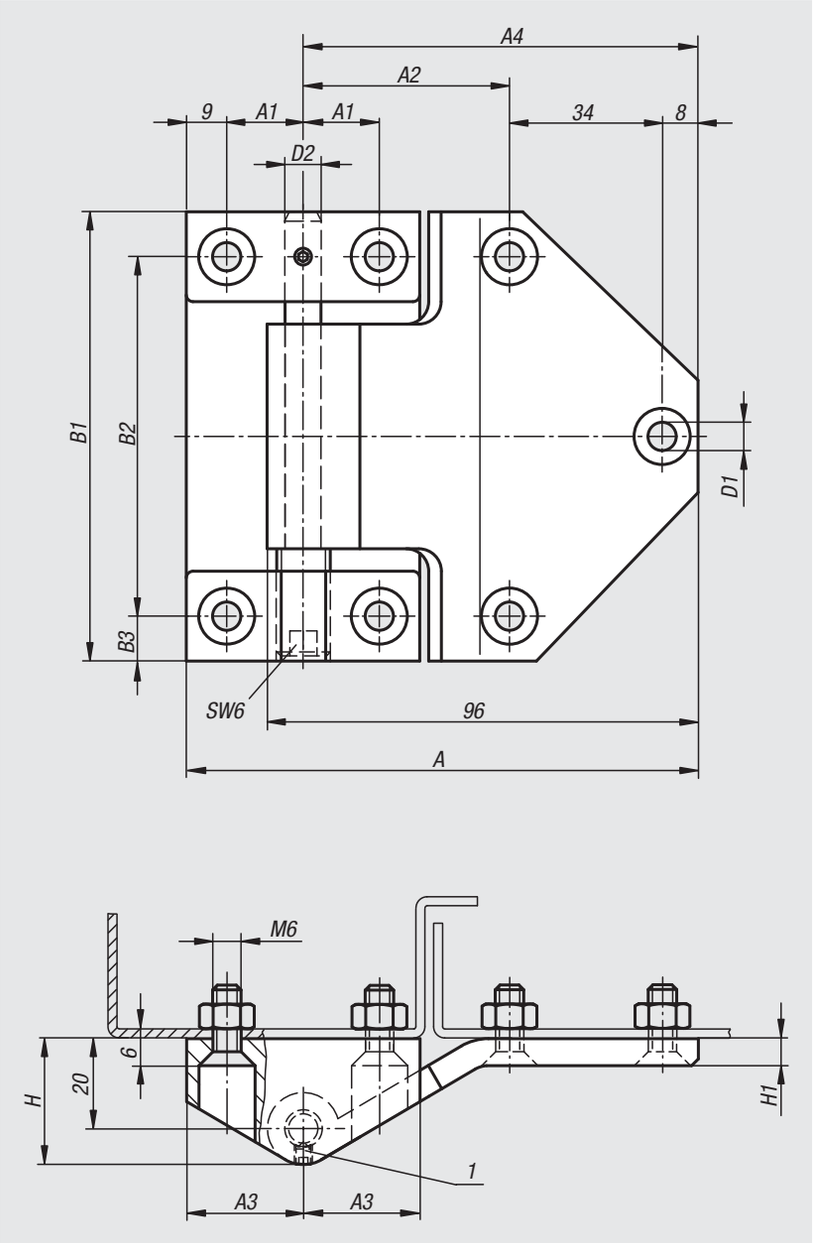

Order No.	A	A1	A2	A3	A4	B1	B2	B3	D1	D2	H	H1
27876-01-06884617	114	17	46	26	88	100	80	10	6,3	8	28	6

Hinges

stainless steel

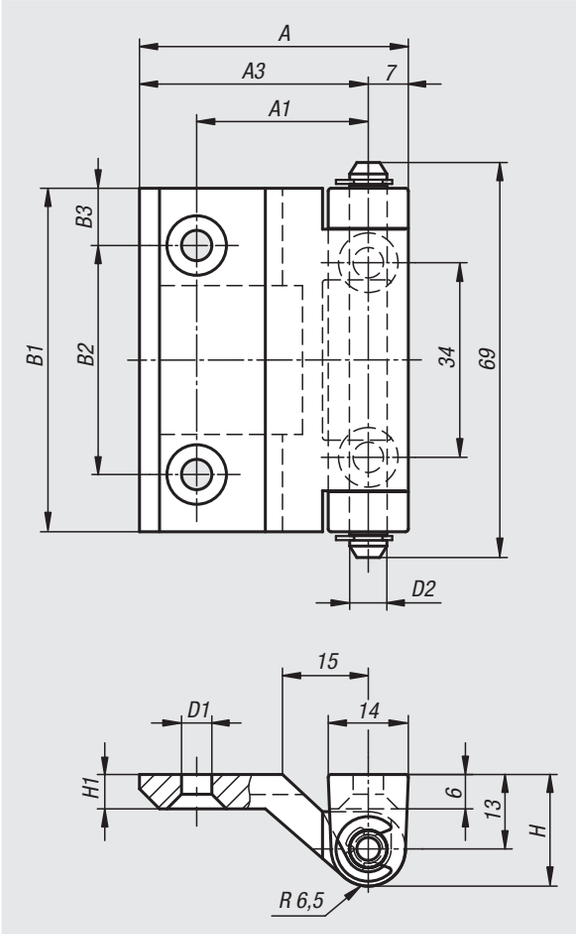

Material:
Hinge body stainless steel 1.4401.
Pin and retaining rings stainless steel 1.4305.

Version:
Satin finished.

Sample order:
nlm 27876-02-0540073000

Note:
Hinge for flush constructions.
Right or left mounting.
Ideal for mounting on narrow frames.
The opening angle is max. 220°.

Order No.	A	A1	A3	B1	B2	B3	D1	D2	H	H1
27876-02-0540073000	47	30	40	60	40	10	5,3	6,5	19,5	6

Strap hinges

stainless steel with grease nipple

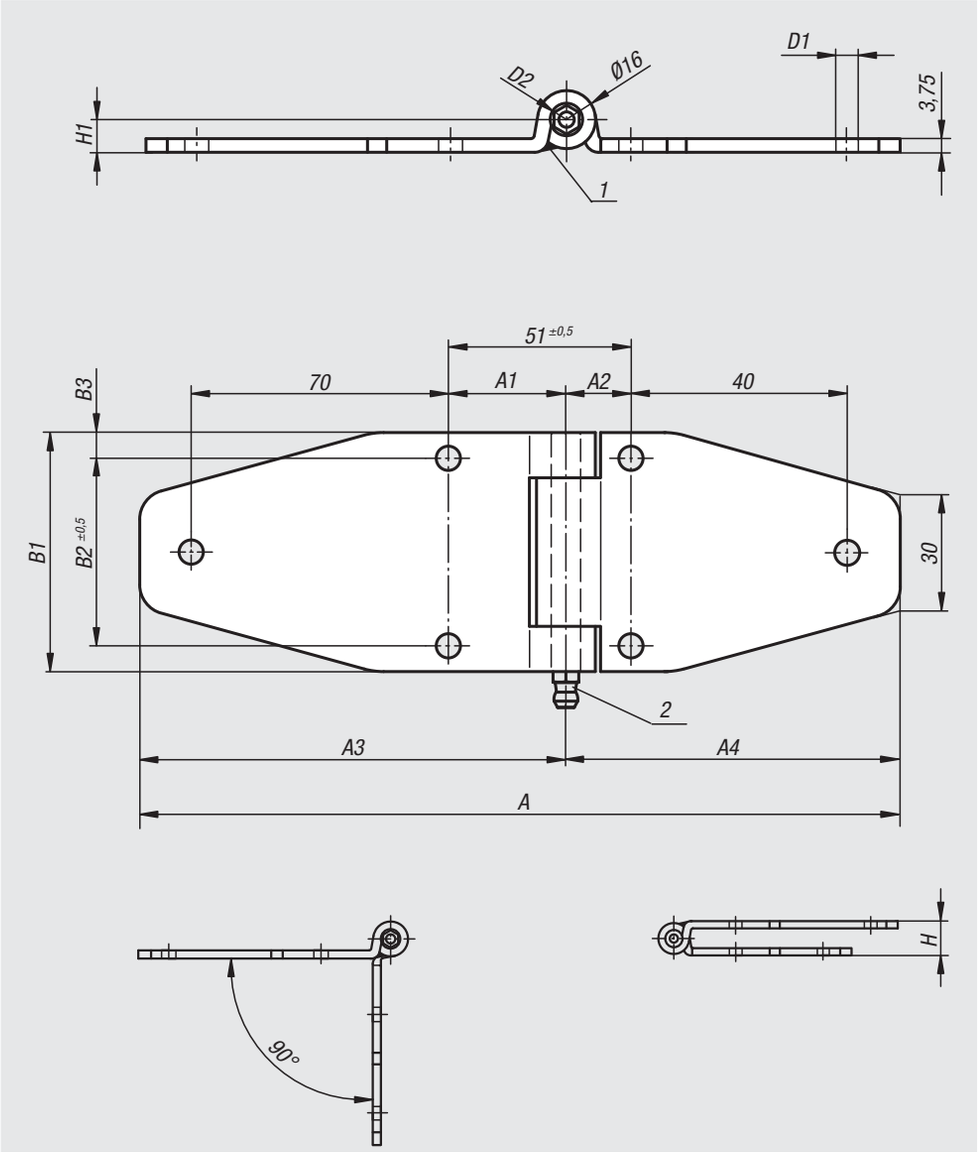

Material:
Stainless steel 1.4301.

Version:
Matt polished.

Sample order:
nlm 27876-05-06701161932

Note:
Strap hinge for inwards opening doors.
The opening angle is max. 270°.

Drawing reference:
1) Rolled ends of long leaf welded
2) Grease nipple

Order No.	A	A1	A2	A3	A4	B1	B2	B3	D1	D2	H	H1
27876-05-06701161932	186	32	19	116	70	65	51	7	6,6	8	18	9

Hinges

plate, steel or stainless steel

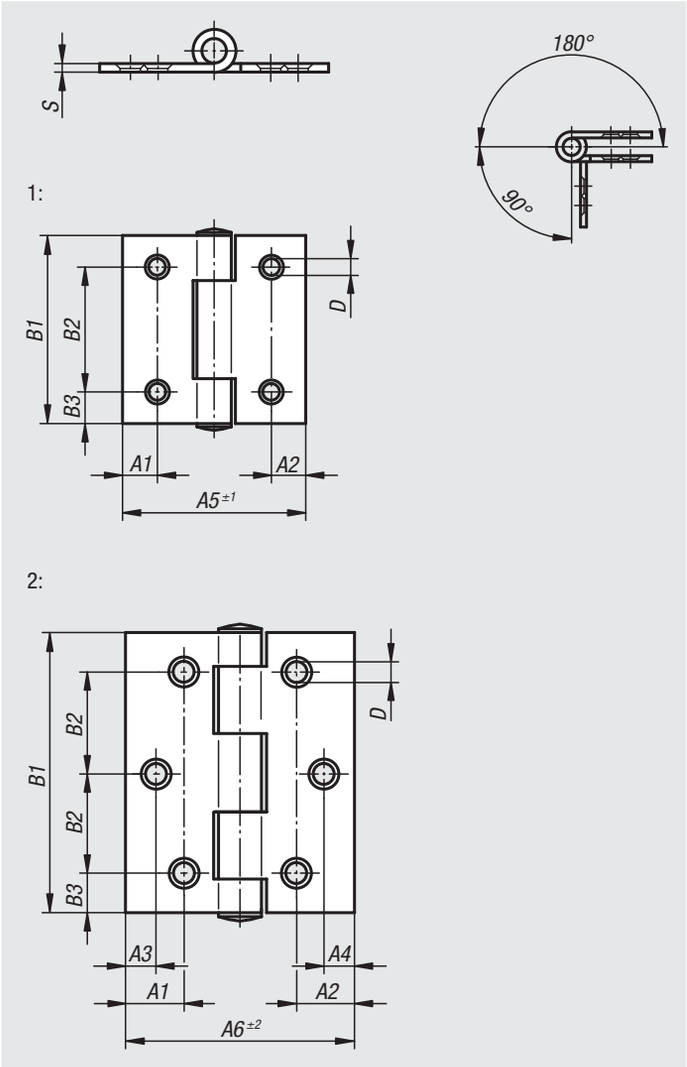

Material:
Steel or stainless steel 1.4301.

Version:
Steel galvanized.
Stainless steel bright.

Sample order:
nlm 27877-04201212

Note:
Rolled plate butt hinges.
Pins are riveted.
Screw holes countersunk.

Order No.	Material	Version	A1	A2	A3	A4	A5	A6	B1	B2	B3	D	S
27877-04201212	steel	1	8,5	8,5	-	-	40	-	40	25	7,5	4	1
27877-04301515	steel	2	15	15	8	8	-	60	60	22,5	7,5	4,5	1,5
27877-104201212	stainless steel	1	8,5	8,5	-	-	40	-	40	25	7,5	4	1
27877-104251414	stainless steel	2	11	11	8	8	-	50	50	18	7	4,5	1,25
27877-104301515	stainless steel	2	15	15	8	8	-	60	60	22,5	7,5	4,5	1,5
27877-105401515	stainless steel	2	25,3	25,3	12	12	-	80	80	30	10	5,2	1,5

Butt hinges

stainless steel

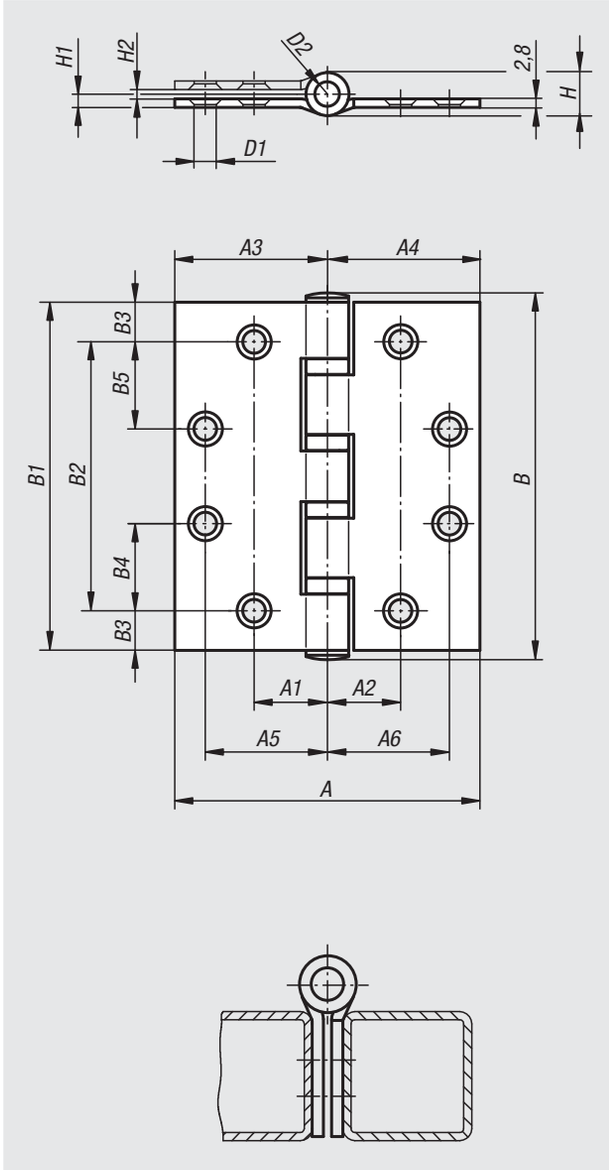

Material:
Stainless steel 1.4301.

Version:
Matt polished.

Sample order:
nlm 27877-01-06371919

Note:
Butt hinge for inwards opening doors.
The opening angle is max. 270°.

Order No.	A	A1	A2	A3	A4	A5	A6	B	B1	B2	B3	B4	B5	D1	D2	H	H1	H2	Load capacity N
27877-01-06371919	75	18,5	18,5	37,5	37,5	27,5	27,5	110	102	76	13	25	25	6,7	8	14	3,8	2	8000
27877-01-07502424	100	24	24	50	50	40	40	120	114	88	13	28,5	28,5	7,3	8	14	4,3	3	8000

Hinges

plastic with bushes

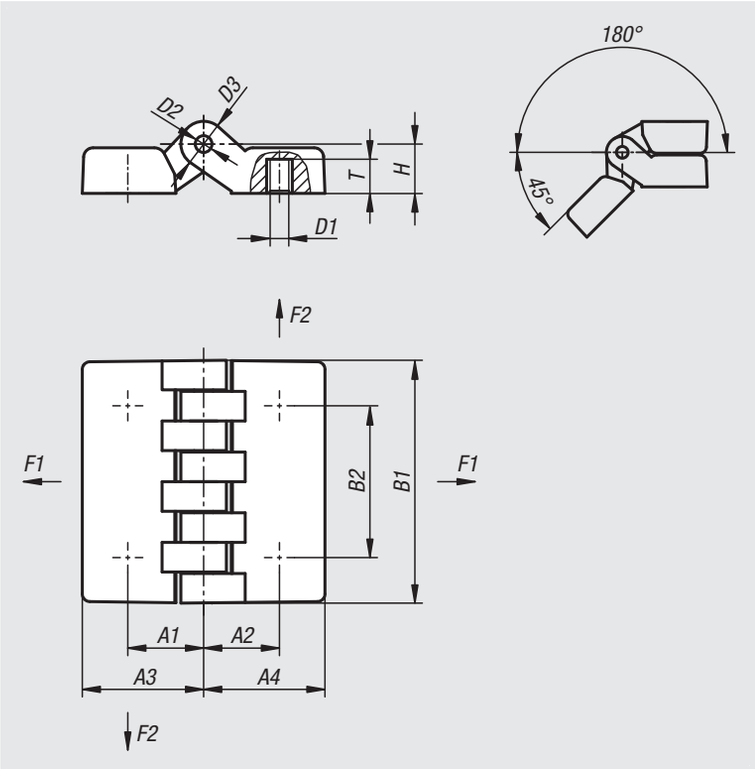

Material:
Fibreglass reinforced thermoplastic.
Hinge pin steel.
Bushes brass.

Version:
Hinge black.
Hinge pin galvanised.

Sample order:
nlm 27880-05241515

Order No.	A1	A2	A3	A4	B1	B2	D1	D2	D3	H	T	F1 N	F2 N
27880-05241515	15	15	24	24	48	30	M5	5	10	10,5	7	2000	1370
27880-06241515	15	15	24	24	48	30	M6	5	10	10,5	7	2000	1370
27880-06322020	20	20	32	32	64	40	M6	5	12	13	9	4100	1800
27880-08322020	20	20	32	32	64	40	M8	5	12	13	9	4100	1800
27880-08483232	31,5	31,5	47,5	47,5	95	60	M8	8	18	19	13	2450	2650
27880-10483232	31,5	31,5	47,5	47,5	95	60	M10	8	18	19	13	2450	2650

Hinges

plastic with fastening screws

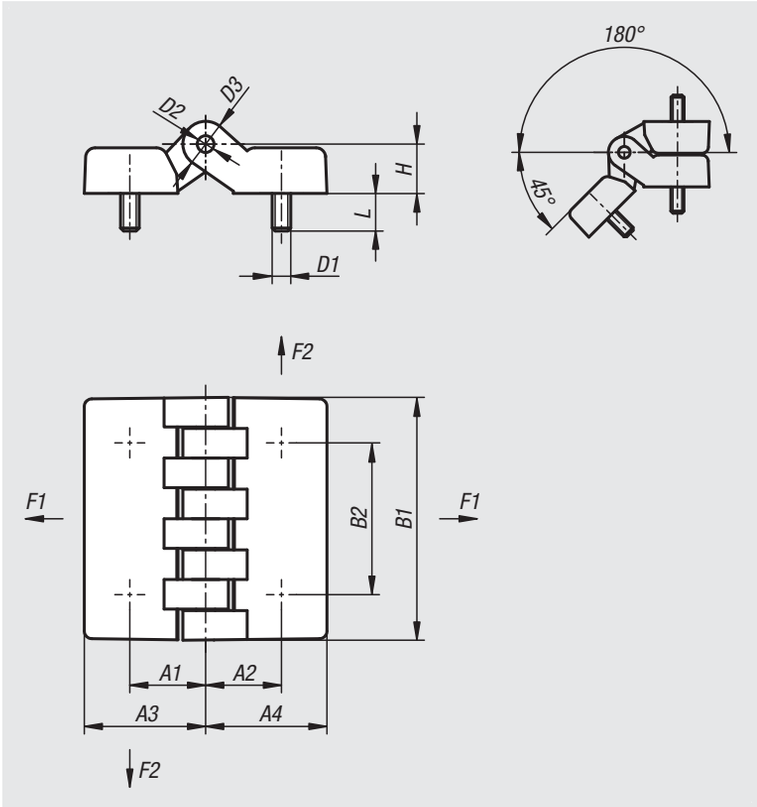

Material:
Fibreglass reinforced thermoplastic.
Hinge pin steel.

Version:
Hinge black.
Hinge pin galvanised.

Sample order:
nlm 27882-05241515

Order No.	A1	A2	A3	A4	B1	B2	D1	D2	D3	H	L	F1 N	F2 N
27882-05241515	15	15	24	24	48	30	M5	5	10	10,5	15	1780	1370
27882-06241515	15	15	24	24	48	30	M6	5	10	10,5	15	1780	1370
27882-06322020	20	20	32	32	64	40	M6	5	12	13	20	4120	1760
27882-08322020	20	20	32	32	64	40	M8	5	12	13	20	4120	1760
27882-08483232	31,5	31,5	47,5	47,5	95	60	M8	8	18	19	20	4900	1275
27882-10483232	31,5	31,5	47,5	47,5	95	60	M10	8	18	19	20	4900	1275

Hinges

plastic with bushes and fastening screws

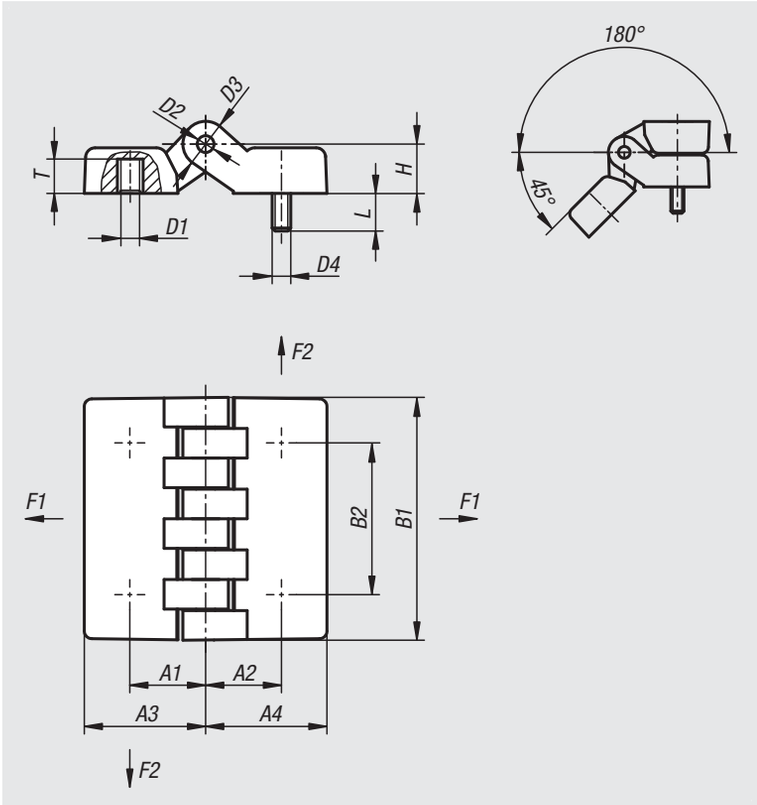

Material:
Fibreglass reinforced thermoplastic.
Hinge pin steel.
Bushes brass.

Version:
Hinge black.
Hinge pin galvanised.

Sample order:
nlm 27884-05241515

Order No.	A1	A2	A3	A4	B1	B2	D1	D2	D3	D4	H	L	T	F1 N	F2 N
27884-05241515	15	15	24	24	48	30	M5	5	10	M5	10,5	15	7	1850	1350
27884-06241515	15	15	24	24	48	30	M6	5	10	M6	10,5	15	7	1850	1350
27884-06322020	20	20	32	32	64	40	M6	5	12	M6	13	20	9	4000	1600
27884-08322020	20	20	32	32	64	40	M8	5	12	M8	13	20	9	4000	1600
27884-08483232	31,5	31,5	47,5	47,5	95	60	M8	8	18	M8	19	20	13	3100	1400
27884-10483232	31,5	31,5	47,5	47,5	95	60	M10	8	18	M10	19	20	13	3100	1400

Hinges

weldable

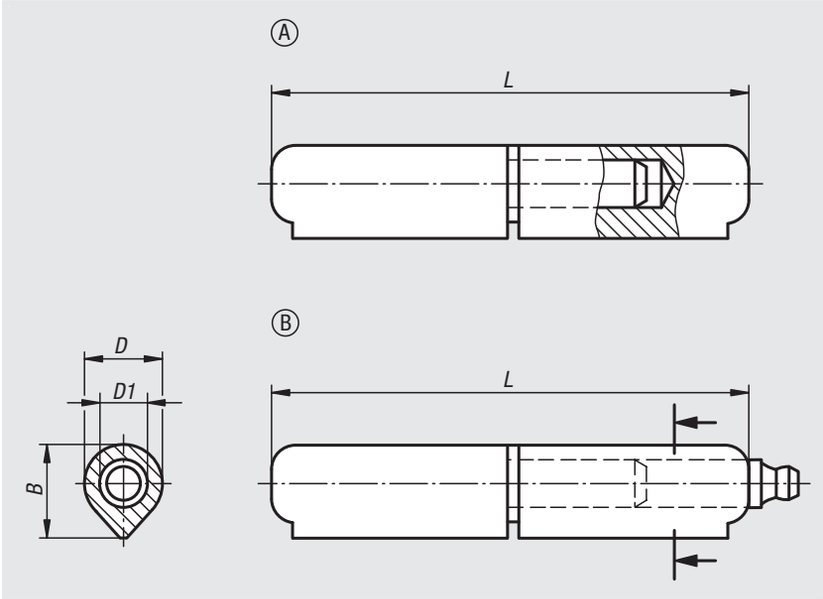

Material:
Hinge steel.
Spacer washer brass.
Hinge pin steel or brass.

Version:
Grease nipple DIN 71412-D, galvanized steel.
Steel parts, bright.

Sample order:
nlm 27885-008040012

Note:
The hinges are made of weldable profile steel.
The pin is fixed into the lower part of the hinge.
The differing steel qualities of the weld and the beam onto which the hinge is welded must be at least equal to or better than:
S235 JR+AR acc. to EN 10025-2:2004-10
DIN 8563 part 3 or Fe E 235 acc. to SIA 161

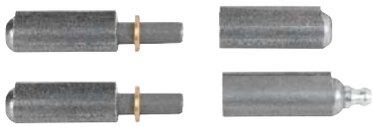

Order No.	Form	Component material	D	D1	L	B
27885-008040012	A	steel	8	5	40	9,7
27885-008050012	A	steel	8	5	50	9,7
27885-010060012	A	steel	10	6	60	12,7
27885-010070012	A	steel	10	6	70	12
27885-013080012	A	steel	13	8	80	15,5
27885-016100012	A	steel	16	10	100	20
27885-016120012	A	steel	16	11	120	20
27885-018135012	A	steel	18	12	135	22
27885-020150012	A	steel	20	13	150	25
27885-020180012	A	steel	20	14	180	25
27885-023200012	A	steel	23	16	200	28,5
27885-008040022	A	brass	8	5	40	9,7
27885-008050022	A	brass	8	5	50	9,7
27885-010060022	A	brass	10	6	60	12,7
27885-010070022	A	brass	10	6	70	12
27885-013080022	A	brass	13	8	80	15,5
27885-016100022	A	brass	16	10	100	20
27885-016120022	A	brass	16	11	120	20
27885-018135022	A	brass	18	12	135	22
27885-020150022	A	brass	20	13	150	25
27885-020180022	A	brass	20	14	180	25
27885-023200022	A	brass	23	16	200	28,5
27885-113080012	B	steel	13	8	80	16
27885-116100012	B	steel	16	10	100	20
27885-116120012	B	steel	16	10	120	20
27885-118135012	B	steel	18	12	135	22,5
27885-120150012	B	steel	20	13	150	25,5
27885-120180012	B	steel	20	14	180	25
27885-123200012	B	steel	23	16	200	29

Hinges

weldable, stainless steel

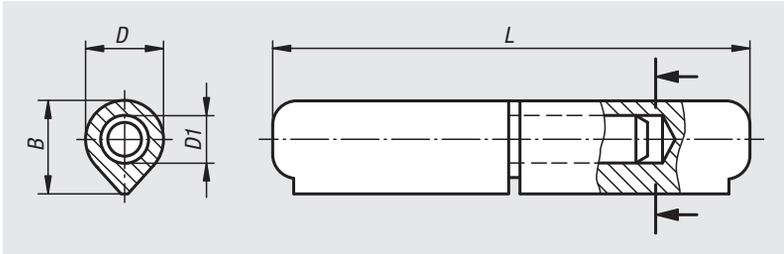

Material:
Stainless steel 1.4305.

Version:
Bright.

Sample order:
nlm 27886-010060033

Note:
The hinges are made of weldable profile steel.
The pin is fixed into the lower part of the hinge.
The differing steel qualities of the weld and the beam onto which the hinge is welded must be at least equal to or better than:
S235 JR+AR acc. to EN 10025-2:2004-10
DIN 8563 part 3 or Fe E 235 acc. to SIA 161

Order No.	D	D1	B	L
27886-010060033	10	6	12	60
27886-013080033	13	8	15,5	80
27886-016100033	16	10	20	100
27886-016120033	16	11	20	120
27886-020150033	20	13	25,5	150
27886-020180033	20	14	25,5	180

In-line hinges stainless steel

lift-off, screw-on

Material:
Stainless steel 1.4401.

Version:
Satin finished.

Sample order:
nlm 27886-03-1761218

Note:
Lift-off inline hinge, right or left mounting.
The sloping hinge ends prevent the accumulation of dirt.

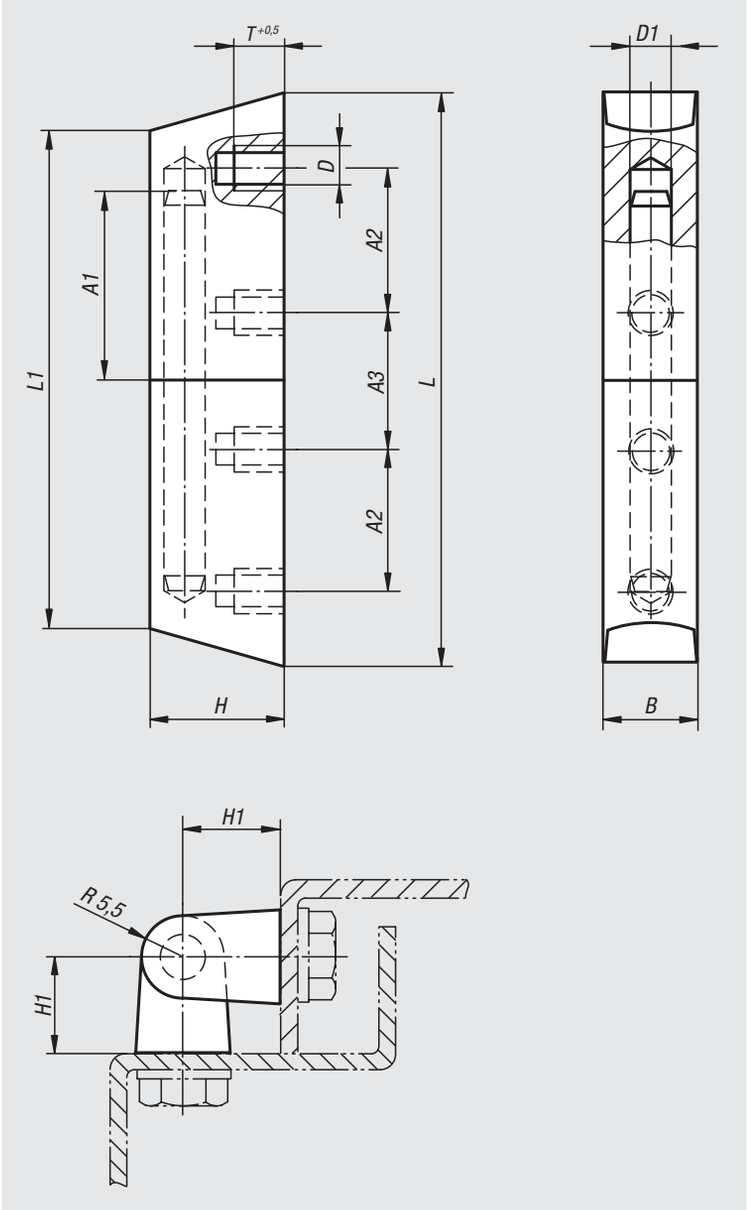

Order No.	L	L1	A1	A2	A3	D	T	H	H1	B	D1
27886-03-1761218	76	66	23	19	18	M6	6	18,5	13	12,5	6

Hinges

weldable

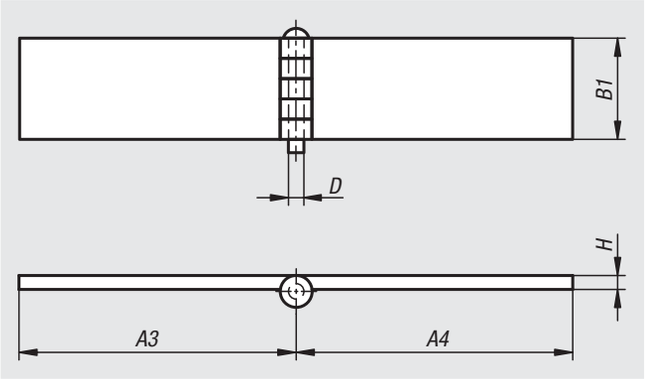

Material:
Steel.

Version:
Bright.

Sample order:
nlm 27888-04030040

Note:
The hinges are made of weldable profile steel.

Order No.	A3	A4	B1	D	H
27888-04030040	40	40	30	4	3
27888-04040040	40	40	40	4	3
27888-06040030	30	30	40	6	5
27888-06040060	60	60	40	6	5
27888-06050060	60	60	50	6	5
27888-06060060	60	60	60	6	5
27888-08060080	80	80	60	8	6

Angular hinges

with fastening nuts

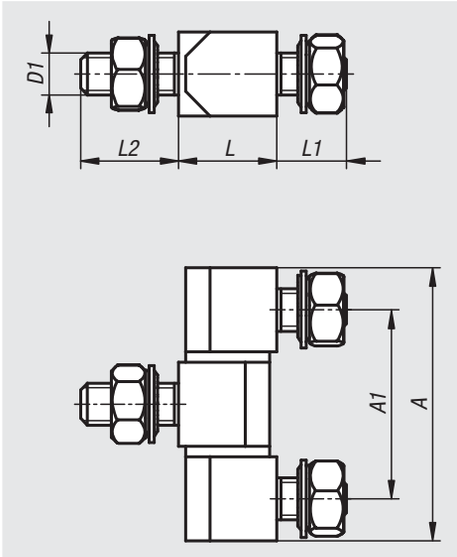

Material:
Steel.
Stainless steel 1.4305.
Stainless steel A4 1.4401.

Version:
Steel galvanized.
Stainless steel bright.

Sample order:
nlm 27890-0614027

Note:
Block hinges with fastening nuts for overlapping or inset doors. Mounted with nuts (M6 or M8) from inside. The 3-part versions are not detachable.
The hinge can be used left or right. The opening angle is 180°.
Supplied unassembled.
Fastening nuts and washers are supplied.

Order No.	Main material	Steel code	A	A1	D1	L	L1 length	L2
27890-0614027	steel	-	39	27	M6	13	10	14
27890-0820033	steel	-	49	33	M8	18	14	22
27890-10614027	stainless steel	1.4305	39	27	M6	13	10	14
27890-10820033	stainless steel	1.4305	49	33	M8	18	14	22
27890-20614027	stainless steel	1.4401	39	27	M6	13	10	14
27890-20820033	stainless steel	1.4401	49	33	M8	18	14	22

Block hinges

with fastening nuts

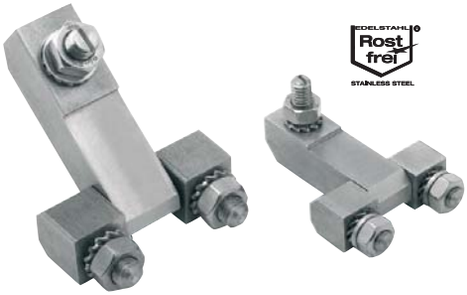

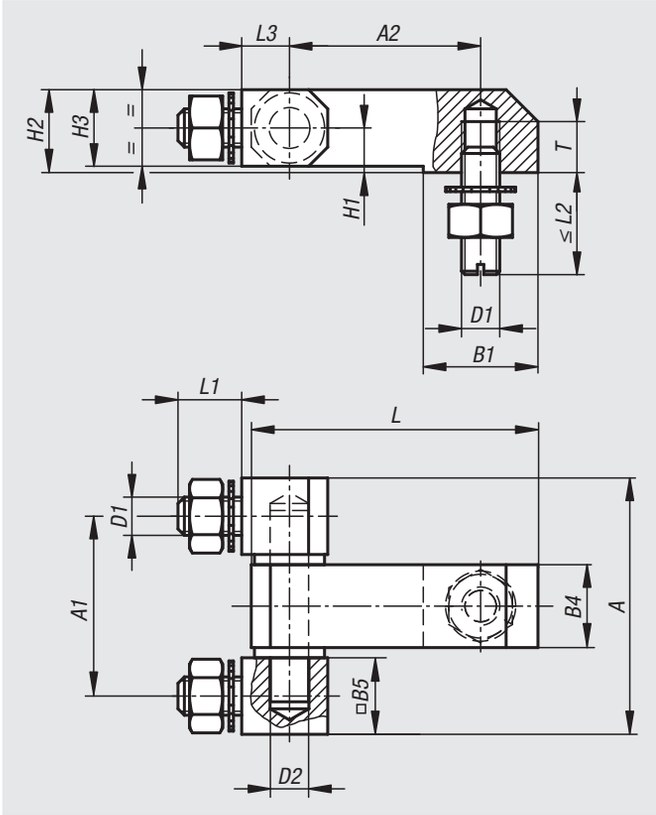

Material:
Hinges stainless 1.4305
Fastening material stainless 1.4301

Version:
Polished.

Sample order:
nlm 27890-02-10630028

Note:
Block hinge for flush constructions.
Light and heavy types.

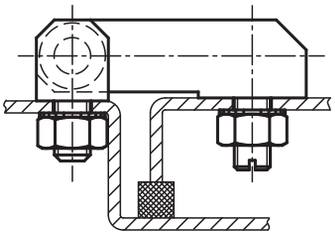

Order No.	B1	A	A1	A2	B4	B5	D1	D2	H1	H2	H3	L	L1	L2	L3	T	Load capacity N
27890-02-10630028	18	40,2	28,2	30	13	12	M6	6	7	13	12	45	10	16	7,5	8	2600
27890-02-10840035	26	51	35	40	18	16	M8	8	10	18	16	61	14	20	10	10	4800

Angular hinges

with fastening nuts, long version

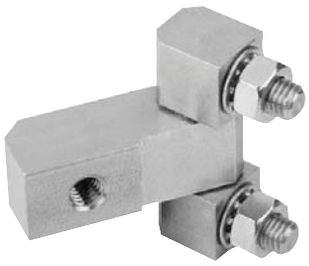

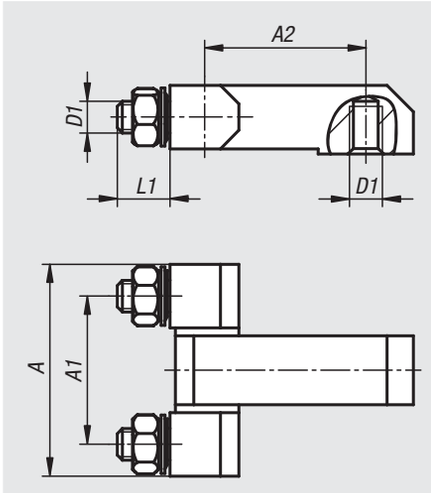

Material:
Steel.
Stainless steel 1.4305.
Stainless steel A4 1.4401.

Version:
Steel galvanized.
Stainless steel bright.

Sample order:
nlm 27891-0630028

Note:
Block hinges with fastening nuts and extended middle section for inset doors.
Mounted with nuts (M6 or M8) from inside.
The hinge can be mounted left or right. The opening angle is 180°.
Supplied unassembled. Fastening nuts and washers are supplied.

Order No.	Main material	Steel code	A	A1	A2	D1	L1 length
27891-0630028	steel	-	40	28	30	M6	10
27891-0829035	steel	-	51	35	29	M8	14
27891-10630028	stainless steel	1.4305	40	28	30	M6	10
27891-10829035	stainless steel	1.4305	51	35	29	M8	14
27891-20630028	stainless steel	1.4401	40	28	30	M6	10
27891-20829035	stainless steel	1.4401	51	35	29	M8	14

Angular hinges

with counterbore, long version

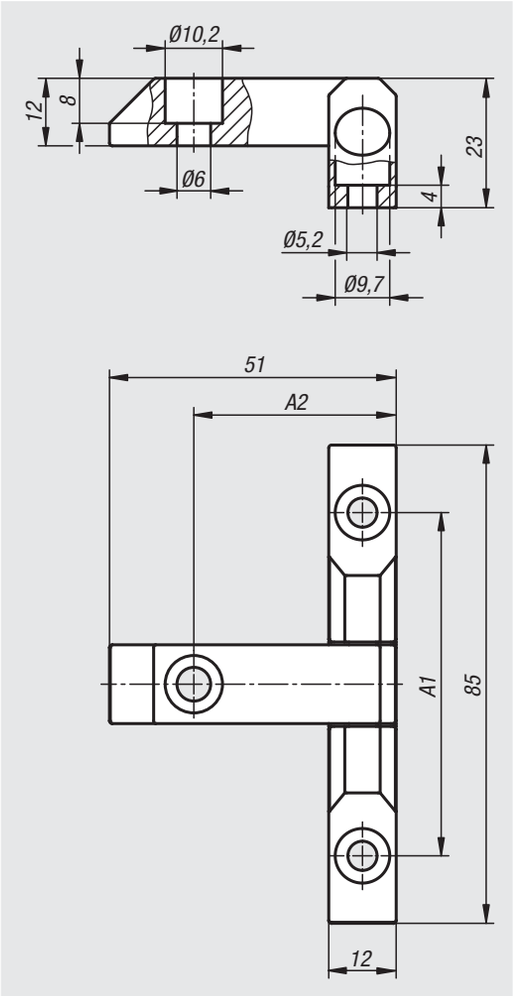

Material:
Steel.

Version:
Steel galvanised or high-gloss chromed.

Sample order:
nlm 27892-00630061

Note:
Block hinges for overlapping doors. Can be mounted left or right.
Opening angle 180°. The hinges are supplied assembled.

Order No.	Surface	A1	A2
27892-00630061	galvanized	61	30
27892-10630061	high-gloss chromed	61	30

Hinges

steel, maintenance-free

Material:
Profile steel.
Bush Metaloplast.

Version:
Steel parts galvanised.

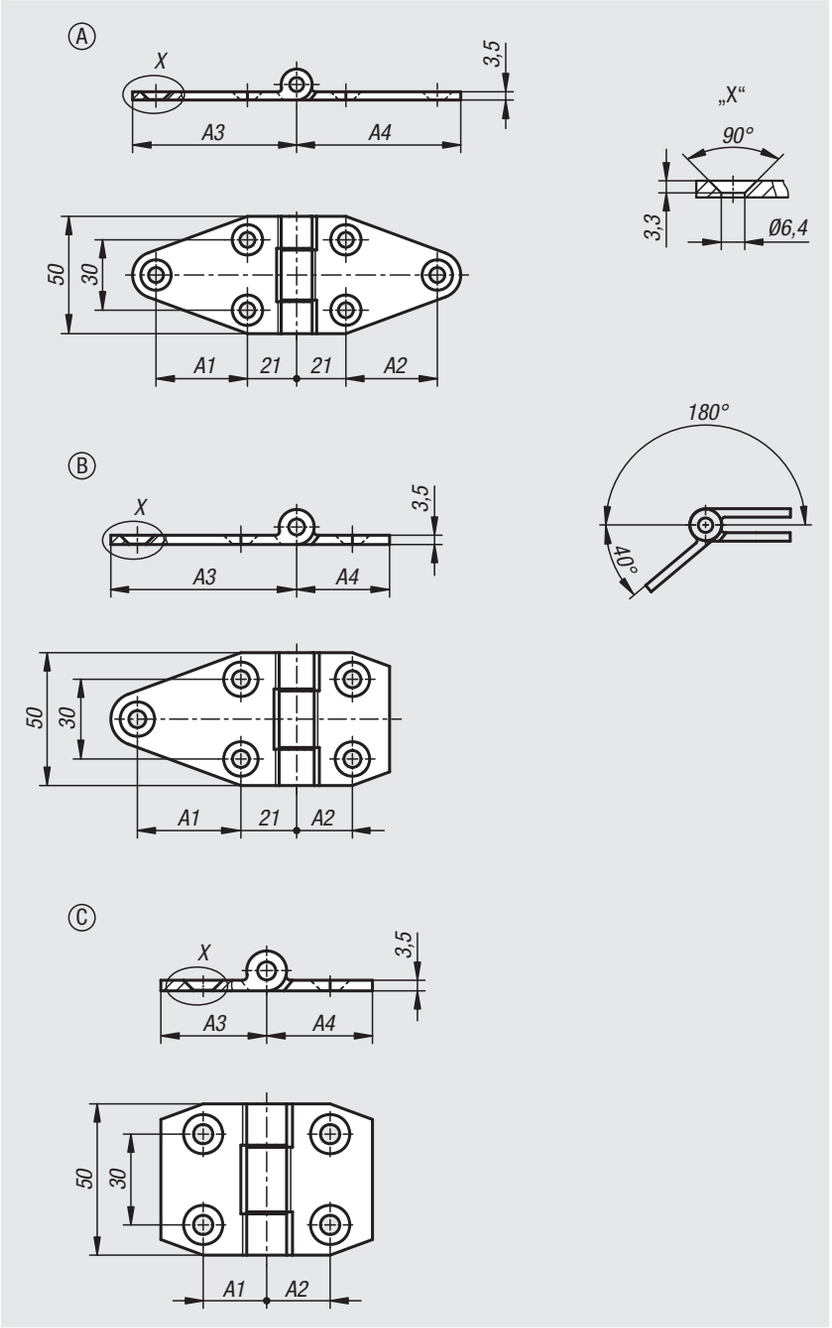

Order No.	Form	A1	A2	A3	A4
27898-06707050	A	39	39	70	70
27898-06703550	B	39	21	70	35
27898-06353550	C	21	21	35	35

Spring hinges

steel or stainless steel, 50 mm

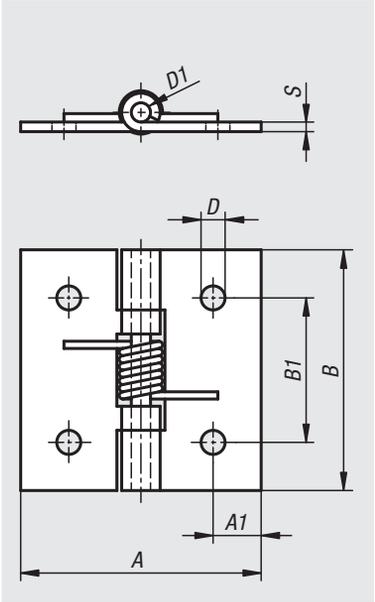

Material:
Steel or 1.4301 stainless steel.
Tension spring stainless steel.

Version:
Steel galvanized.
Stainless steel bright.

Sample order:
nlm 27900-50500

Note:
Butt type hinges.
Opening angle 270°.

Spring torque opening:
M(0°): 1.5 Nm / M(90°): 1.1 Nm / M(180°): 0.65 Nm
Spring torque closing:
M(0°): 0.25 Nm / M(90°): 0.65 Nm / M(180°): 1.1 Nm

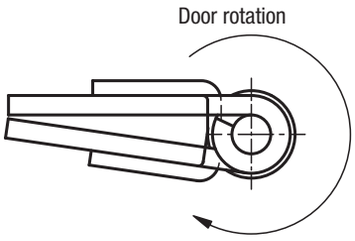

Hinges with closing spring

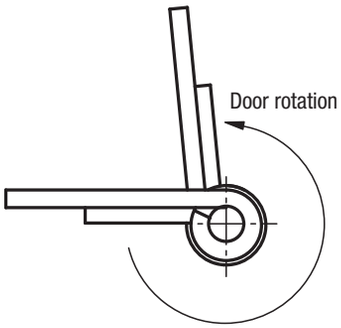

Hinges with opening spring

Order No.	Version	Main material	A	A1	B	B1	D	D1	S
27900-50500	spring open	steel	50	9	50	30	5	4	2
27900-150500	spring open	stainless steel	50	10	50	30	5	4	2
27900-50501	spring closed	steel	50	9	50	30	5	4	2
27900-150501	spring closed	stainless steel	50	10	50	30	5	4	2

Spring hinges

steel or stainless steel, 75 mm

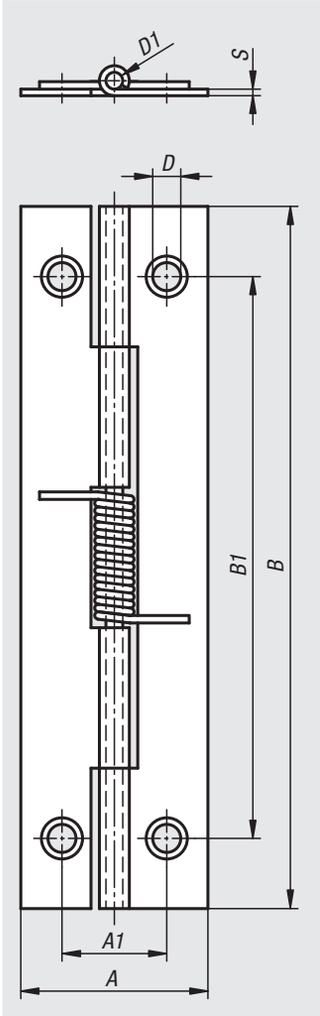

Material:
Steel or 1.4301 stainless steel.
Tension spring stainless steel.

Version:
Bright.

Sample order:
nlm 27901-20750

Note:
Butt type hinges.
Opening angle 270°.

Spring torque:
M(0°): 0.12 Nm / M(90°): 0.09 Nm / M(180°): 0.06 Nm

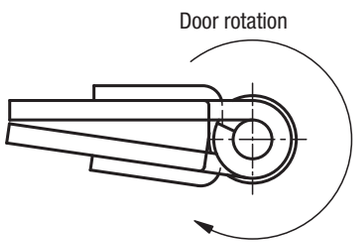

Hinges with closing spring

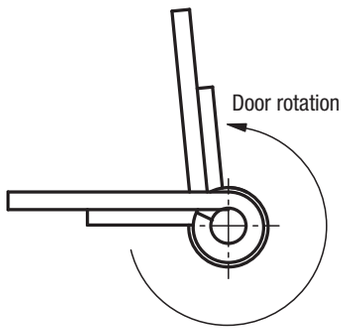

Hinges with opening spring

Order No.	Main material	A	A1	B	B1	D	D1	S
27901-20750	steel	20	11,2	75	60	2,8	1,8	0,8
27901-120750	stainless steel	20	11,2	75	60	2,8	1,8	0,8

Spring hinges

steel or stainless steel, 120 mm

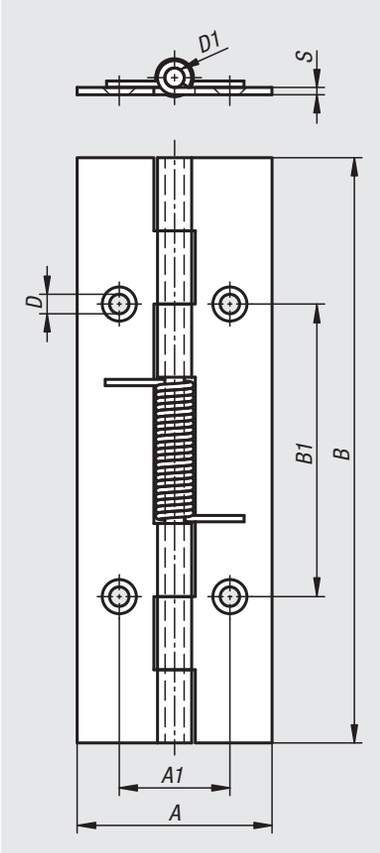

Material:
Steel or 1.4301 stainless steel.
Tension spring stainless steel.

Version:
Steel bright or galvanised.
Stainless steel bright.

Sample order:
nlm 27902-4012000

Note:
Butt type hinges.
Opening angle 270°.

Spring torque opening:
M(0°): 0.85 Nm / M(90°): 0.56 Nm / M(180°): 0.28 Nm
Spring torque closing:
M(0°): 0.28 Nm / M(90°): 0.56 Nm / M(180°): 0.85 Nm

Form A: without holes
Form B: with holes

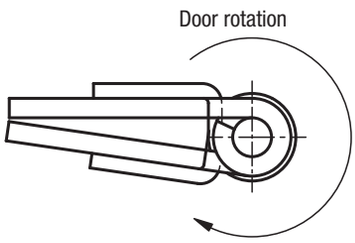

Hinges with closing spring

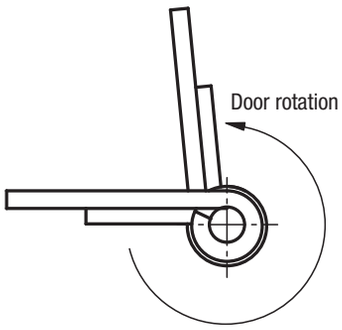

Hinges with opening spring

Order No.	Form	Version	Main material	Surface	A	A1	B	B1	D	D1	S
27902-4012000	A	spring open	steel	bright	40	-	120	-	-	4	1,5
27902-4012001	B	spring open	steel	galvanised	40	22,7	120	60	4	4	1,5
27902-14012000	A	spring open	stainless steel	bright	40	-	120	-	-	4	1,5
27902-14012001	B	spring open	stainless steel	bright	40	22,7	120	60	4	4	1,5
27902-4012010	A	spring closed	steel	bright	40	-	120	-	-	4	1,5
27902-4012011	B	spring closed	steel	galvanised	40	22,7	120	60	4	4	1,5
27902-14012010	A	spring closed	stainless steel	bright	40	-	120	-	-	4	1,5
27902-14012011	B	spring closed	stainless steel	bright	40	22,7	120	60	4	4	1,5

Spring hinges

steel or stainless steel, 180 mm

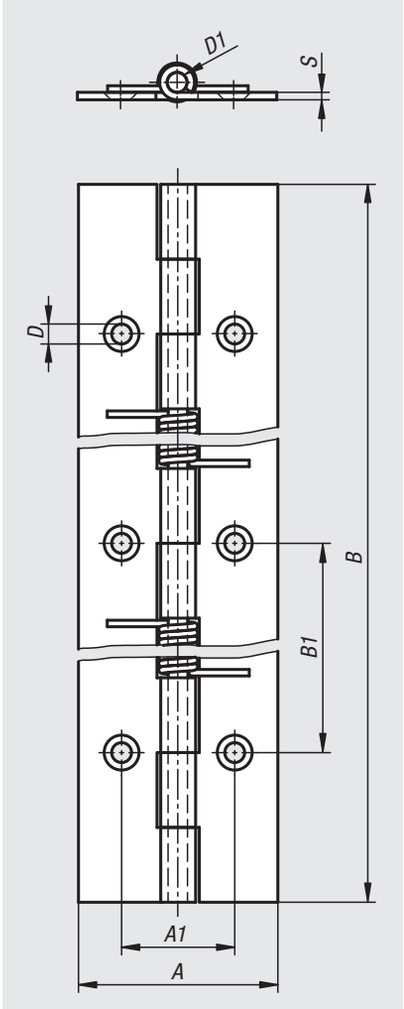

Material:
Steel or 1.4301 stainless steel.
Tension spring stainless steel.

Version:
Steel bright or galvanised.
Stainless steel bright.

Sample order:
nlm 27903-4018000

Note:
Butt type hinges.
Opening angle 270°.

Spring torque opening:
M(0°): 1.7 Nm / M(90°): 1.1 Nm / M(180°): 0.56 Nm
Spring torque closing:
M(0°): 0.56 Nm / M(90°): 1.1 Nm / M(180°): 1.7 Nm

Form A: without holes
Form B: with holes

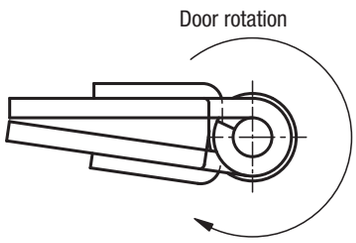

Hinges with closing spring

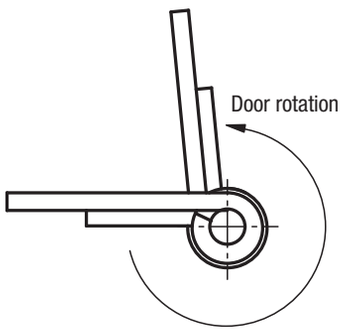

Hinges with opening spring

Order No.	Form	Version	Main material	Surface	A	A1	B	B1	D	D1	S
27903-4018000	A	spring open	steel	bright	40	-	180	-	-	4	1,5
27903-4018001	B	spring open	steel	galvanised	40	22,7	180	60	4	4	1,5
27903-14018000	A	spring open	stainless steel	bright	40	-	180	-	-	4	1,5
27903-14018001	B	spring open	stainless steel	bright	40	22,7	180	60	4	4	1,5
27903-4018010	A	spring closed	steel	bright	40	-	180	-	-	4	1,5
27903-4018011	B	spring closed	steel	galvanised	40	22,7	180	60	4	4	1,5
27903-14018010	A	spring closed	stainless steel	bright	40	-	180	-	-	4	1,5
27903-14018011	B	spring closed	stainless steel	bright	40	22,7	180	60	4	4	1,5

Spring hinges

steel or stainless steel, 240 mm

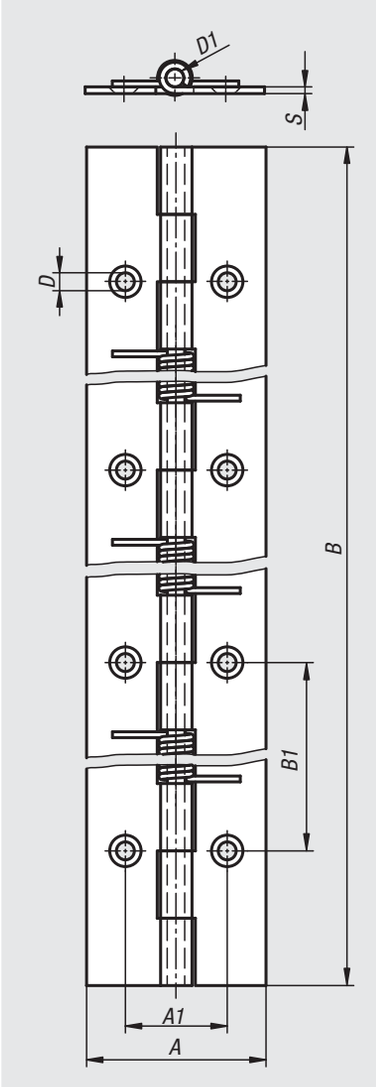

Material:
Steel or 1.4301 stainless steel.
Tension spring stainless steel.

Version:
Steel bright or galvanised.
Stainless steel bright.

Sample order:
nlm 27904-4024000

Note:
Butt type hinges.
Opening angle 270°.

Spring torque opening:
M(0°): 2.55 Nm / M(90°): 1.68 Nm / M(180°): 0.84 Nm
Spring torque closing:
M(0°): 0.84 Nm / M(90°): 1.68 Nm / M(180°): 2.55 Nm

Form A: without holes
Form B: with holes

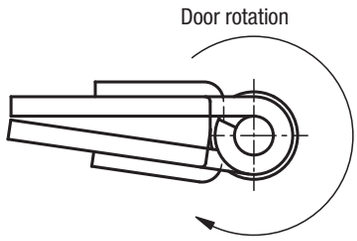

Hinges with closing spring

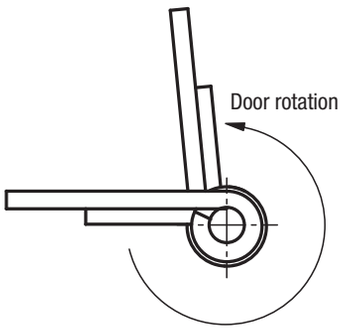

Hinges with opening spring

Order No.	Form	Version	Main material	Surface	A	A1	B	B1	D	D1	S
27904-4024000	A	spring open	steel	bright	40	-	240	-	-	4	1,5
27904-4024001	B	spring open	steel	galvanised	40	22,7	240	60	4	4	1,5
27904-14024000	A	spring open	stainless steel	bright	40	-	240	-	-	4	1,5
27904-14024001	B	spring open	stainless steel	bright	40	22,7	240	60	4	4	1,5
27904-4024010	A	spring closed	steel	bright	40	-	240	-	-	4	1,5
27904-4024011	B	spring closed	steel	galvanised	40	22,7	240	60	4	4	1,5
27904-14024010	A	spring closed	stainless steel	bright	40	-	240	-	-	4	1,5
27904-14024011	B	spring closed	stainless steel	bright	40	22,7	240	60	4	4	1,5

Spring hinges

aluminium profile tension spring hinges, 0.20 Nm

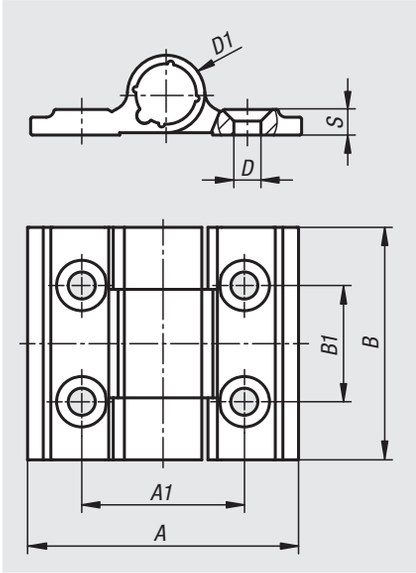

Material:
Aluminium 6060 T5.
Cover plug PA 6.6.

Version:
Black anodized

Sample order:
nlm 27905-353001

Note:
These hinges have stainless steel tension springs which enables doors and hatches to open or close automatically.
Opening angle 270°.

Spring torque opening:
M(0°): 0.20 Nm / M(90°): 0.12 Nm / M(180°): 0.07 Nm
Spring torque closing:
M(0°): 0.20 Nm / M(90°): 0.12 Nm / M(180°): 0.07 Nm

Fastened with DIN 7991 countersunk screws.

Temperature range:
From -20°C to +80°C

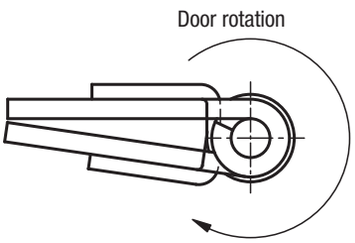

Hinges with closing spring

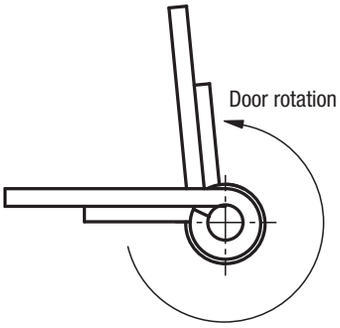

Hinges with opening spring

Order No.	Version	A	A1	B	B1	D	D1	S
27905-353001	spring open	35	21	30	15	3,5	10	3,3
27905-353011	spring closed	35	21	30	15	3,5	10	3,3

Spring hinges

aluminium profile tension spring hinges, 0.35 Nm

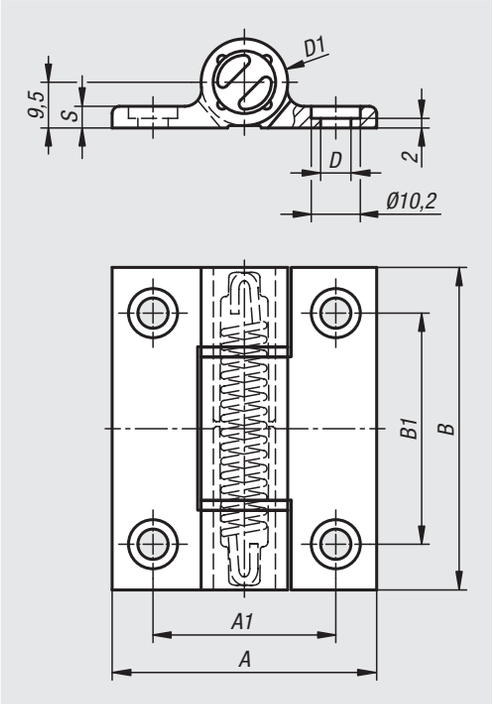

Material:
Aluminium 6060 T5.
End caps PA 6.6.
Washers POM.

Version:
Black anodized

Sample order:
nlm 27906-556701

Note:
These hinges have steel tension springs which enables doors and hatches to open or close automatically.
Opening angle 180°.

Spring torque opening:
M(0°): 0.35 Nm / M(90°): 0.24 Nm / M(180°): 0.12 Nm

These hinges have a more than 30000 cycle service life.

Fastened using DIN 912/EN ISO 4762 socket head screws.

Temperature range:
From -20°C to +80°C

Accessories:
Socket head screws with hexagon socket DIN 912/EN ISO 4762

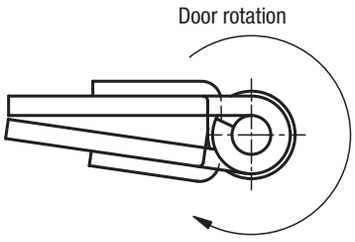

Hinges with closing spring

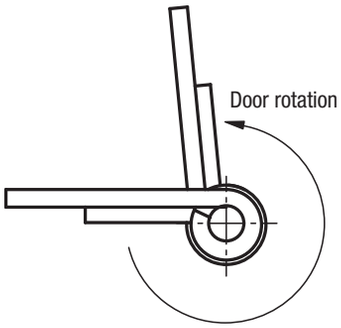

Hinges with opening spring

Order No.	Version	A	A1	B	B1	D	D1	S
27906-556701	spring open	55	38	67	48	6,3	18	4,5

Spring hinges

aluminium profile tension spring hinges, 0.7 Nm

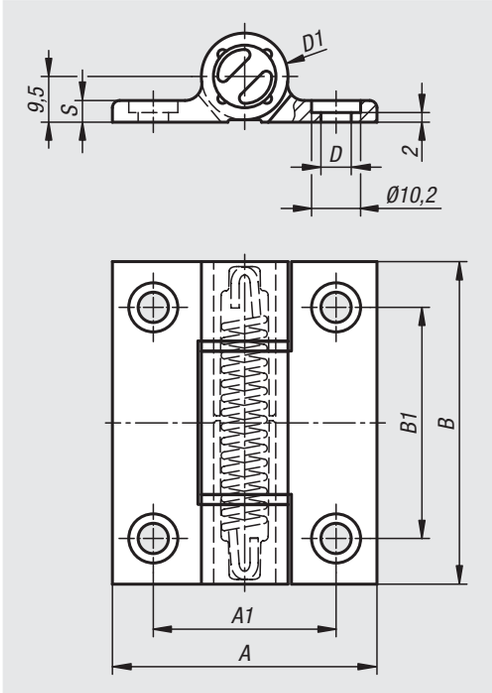

Material:
Aluminium 6060 T5.
End caps PA 6.6.
Washers POM.

Version:
Black anodized

Sample order:
nlm 27907-556701

Note:
These hinges have steel tension springs which enables doors and hatches to open or close automatically.
Opening angle 180°.

Spring torque opening:
M(0°): 0.7 Nm / M(90°): 0.45 Nm / M(180°): 0.23 Nm
Spring torque closing:
M(0°): 0.7 Nm / M(90°): 0.45 Nm / M(180°): 0.23 Nm

These hinges have a more than 30000 cycle service life.

Fastened using DIN 912/EN ISO 4762 socket head screws.

Temperature range:
From -20°C to +80°C

Accessories:
Socket head screws with hexagon socket DIN 912/EN ISO 4762

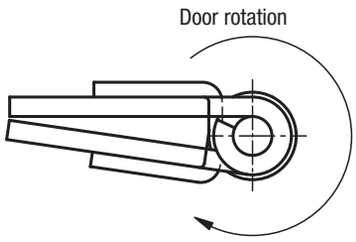

Hinges with closing spring

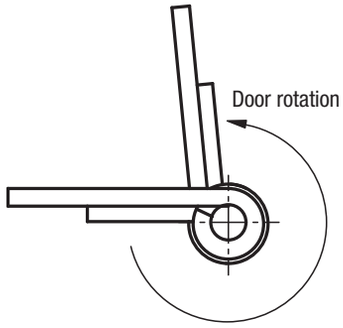

Hinges with opening spring

Order No.	Version	A	A1	B	B1	D	D1	S
27907-556701	spring open	55	38	67	48	6,3	18	4,5
27907-556711	spring closed	55	38	67	48	6,3	18	4,5

Spring hinges

aluminium profile tension spring hinges, 1.3 Nm

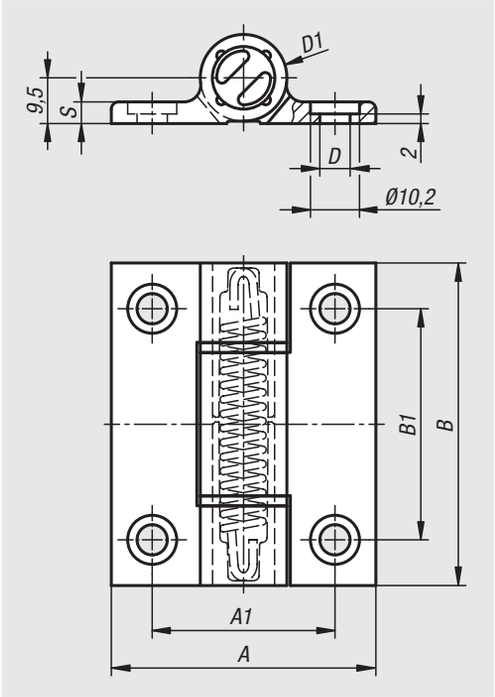

Material:
Aluminium 6060 T5.
End caps PA 6.6.
Washers POM.

Version:
Black anodized

Sample order:
nlm 27908-556701

Note:
These hinges have steel tension springs which enables doors and hatches to open or close automatically.
Opening angle 180°.

Spring torque opening:
M(0°): 1.3 Nm / M(90°): 1.1 Nm / M(180°): 0.9 Nm
Spring torque closing:
M(0°): 0.5 Nm / M(90°): 0.7 Nm / M(180°): 1 Nm

These hinges have a more than 10000 cycle service life.

Fastened using DIN 912/EN ISO 4762 socket head screws.

Temperature range:
From -20°C to +80°C

Accessories:
Socket head screws with hexagon socket DIN 912/EN ISO 4762

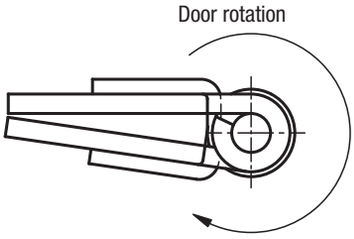

Hinges with closing spring

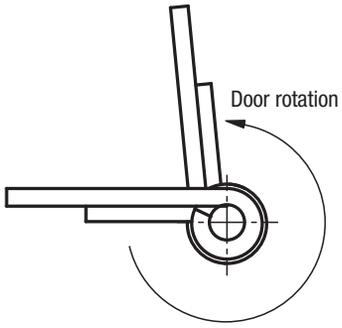

Hinges with opening spring

Order No.	Version	A	A1	B	B1	D	D1	S
27908-556701	spring open	55	38	67	48	6,3	18	4,5
27908-556711	spring closed	55	38	67	48	6,3	18	4,5

Spring hinges

aluminium profile tension spring hinges, 3.8 Nm

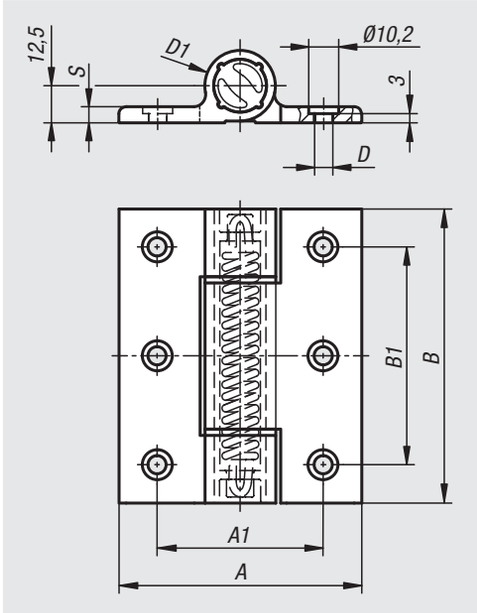

Material:
Aluminium 6060 T5.
End caps PA 6.6.
Washers POM.

Version:
Black anodized

Sample order:
nlm 27909-8210001

Note:
These hinges have steel tension springs which enables doors and hatches to open or close automatically.
Opening angle 270°.

Spring torque opening:
M(0°): 3.80 Nm / M(90°): 3.10 Nm / M(180°): 2.40 Nm
Spring torque closing:
M(0°): 2.20 Nm / M(90°): 2.90 Nm / M(180°): 3.50 Nm

Fastened using DIN 912/EN ISO 4762 socket head screws.

Temperature range:
From -20°C to +80°C

Accessories:
Socket head screws with hexagon socket DIN 912/EN ISO 4762

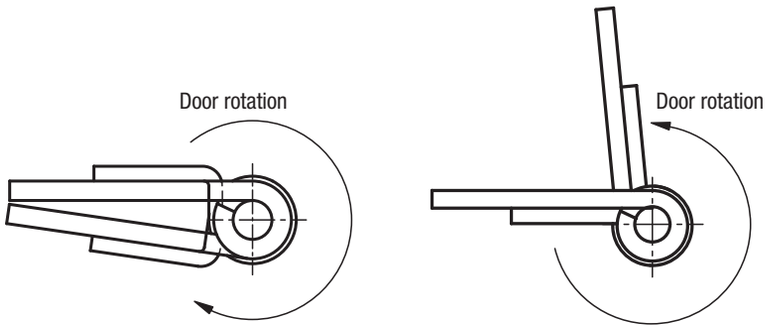

Hinges with closing spring

Hinges with opening spring

Order No.	Version	A	A1	B	B1	D	D1	S
27909-8210001	spring open	82,5	56,5	100	74	6,2	24	5,5
27909-8210011	spring closed	82,5	56,5	100	74	6,2	24	5,5

Security hinge switches

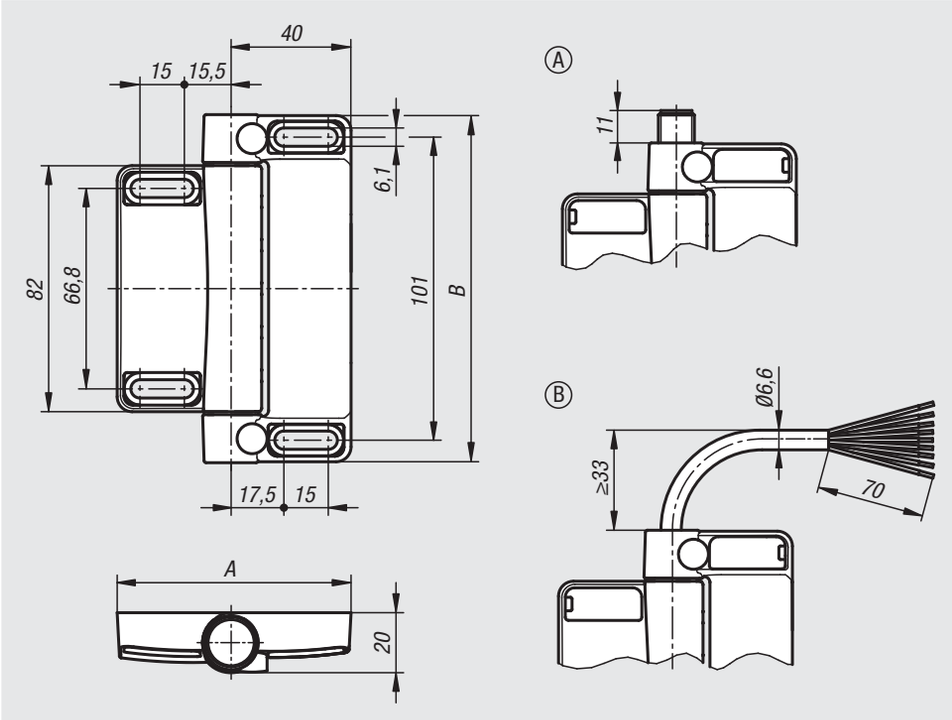

Material:
Housing, die-cast zinc.
Housing cover, plastic, self-extinguishing.
Hinge bolts, die-cast zinc/steel C45.
Contacts, silver-nickel alloy 10.

Sample order:
nlm 27950-781161111

Note:
The security hinge switches are used for monitoring the position of pivoting safety doors, protective covers and protective hoods. The security is monitored directly in the hinge.
The switching angle is freely adjustable over the entire working range. A mounting aid ensures quick alignment with doors and posts.

The additional hinges have the same appearance and dimensions as the security hinge switches.

Application:
- Special machine construction
- Electronics industry
- Packaging machines
- Enclosures/profile systems
- Machine tools
- Measuring, processing, testing and laboratory technology

Assembly:
4x DIN 7984 or ISO 4762 M6 screws,
Tightening torque 4.3 Nm
General assembly instructions can be found in the accompanying operating instructions.

Advantages:
- Suitable for securing pivot flaps and gates
- Minimum assembly required, especially on conventional aluminium profiles
- Optimum integration into the surrounding structure
- Additional protection against tampering
- Hardly any mechanical wear

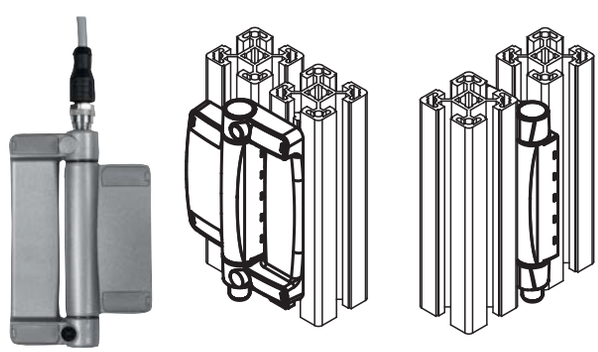

Order No.	Description	Form	A	B	Pre-setting	Contacts	Connection type	Connection position
27950-781161111	security hinge	A	78	116	external mounting	1C / 20	connector	top
27950-781161112	security hinge	A	78	116	external mounting	1C / 20	connector	bottom
27950-781162111	security hinge	A	78	116	universal	1C / 20	connector	top
27950-781162112	security hinge	A	78	116	universal	1C / 20	connector	bottom
27950-781161121	security hinge	B	78	116	external mounting	1C / 20	cable	top
27950-781161122	security hinge	B	78	116	external mounting	1C / 20	cable	bottom
27950-781162121	security hinge	B	78	116	universal	1C / 20	cable	top
27950-781162122	security hinge	B	78	116	universal	1C / 20	cable	bottom
27950-78116	additional hinge	-	78	116	-	-	-	-

Security hinge switch

long version

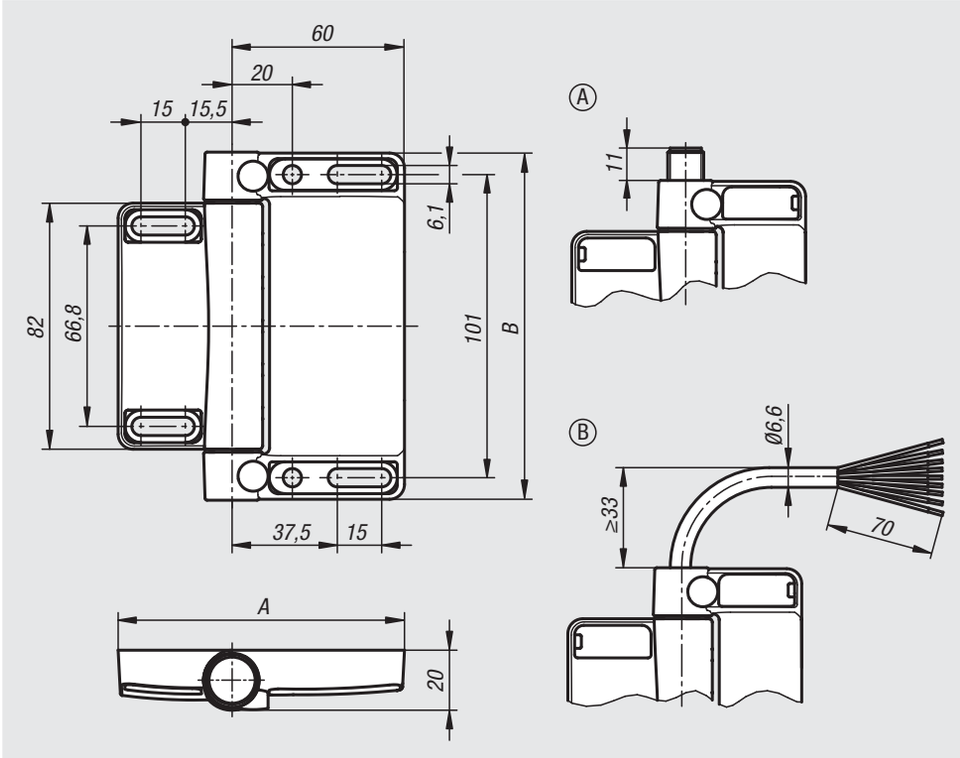

Material:
Housing, die-cast zinc.
Housing cover, plastic, self-extinguishing.
Hinge bolts, die-cast zinc/steel C45.
Contacts, silver-nickel alloy 10.

Sample order:
nlm 27951-981161111

Note:
The security hinge switches are used for monitoring the position of pivoting safety doors, protective covers and protective hoods. The security is monitored directly in the hinge.
The switching angle is freely adjustable over the entire working range. A mounting aid ensures quick alignment with doors and posts.

The additional hinges have the same appearance and dimensions as the security hinge switches.

Application:
- Special machine construction
- Electronics industry
- Packaging machines
- Enclosures/profile systems
- Machine tools
- Measuring, processing, testing and laboratory technology

Assembly:
4x DIN 7984 or ISO 4762 M6 screws,
Tightening torque 4.3 Nm
General assembly instructions can be found in the accompanying operating instructions.

Advantages:
- Suitable for securing pivot flaps and gates
- Minimum assembly required, especially on conventional aluminium profiles
- Optimum integration into the surrounding structure
- Additional protection against tampering
- Hardly any mechanical wear

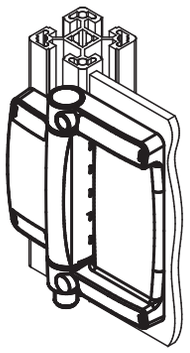

Order No.	Description	Form	A	B	Pre-setting	Contacts	Connection type	Connection position
27951-981161111	security hinge	A	98	116	external mounting	1C / 20	connector	top
27951-981161112	security hinge	A	98	116	external mounting	1C / 20	connector	bottom
27951-981162111	security hinge	A	98	116	universal	1C / 20	connector	top
27951-981162112	security hinge	A	98	116	universal	1C / 20	connector	bottom
27951-981161121	security hinge	B	98	116	external mounting	1C / 20	cable	top
27951-981161122	security hinge	B	98	116	external mounting	1C / 20	cable	bottom
27951-981162121	security hinge	B	98	116	universal	1C / 20	cable	top
27951-981162122	security hinge	B	98	116	universal	1C / 20	cable	bottom
27951-98116	additional hinge	-	98	116	-	-	-	-

Notes

28000

Oil level gauges
Caps
Plugs
Vent screws
Dipsticks
Filler necks

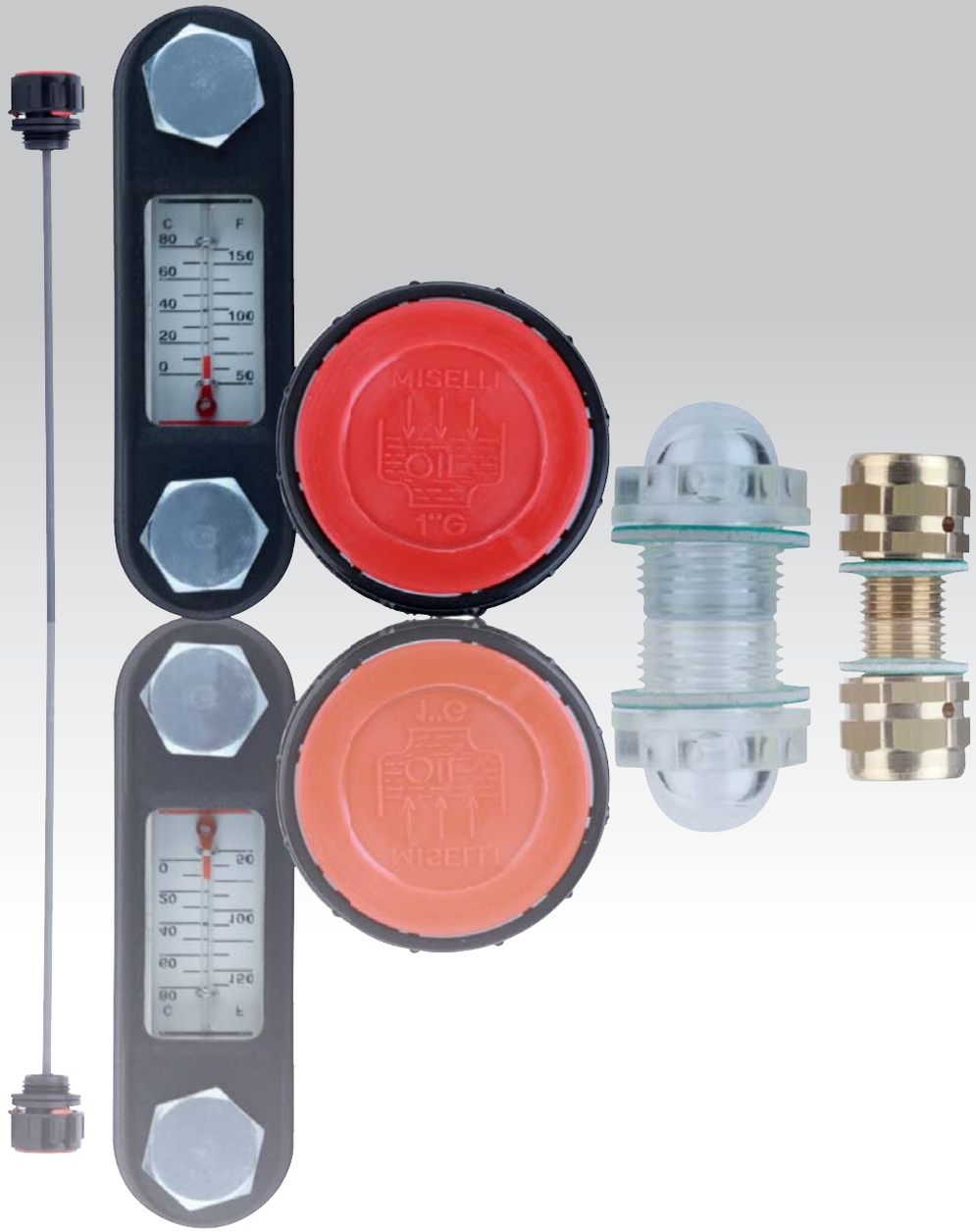

Oil level gauges

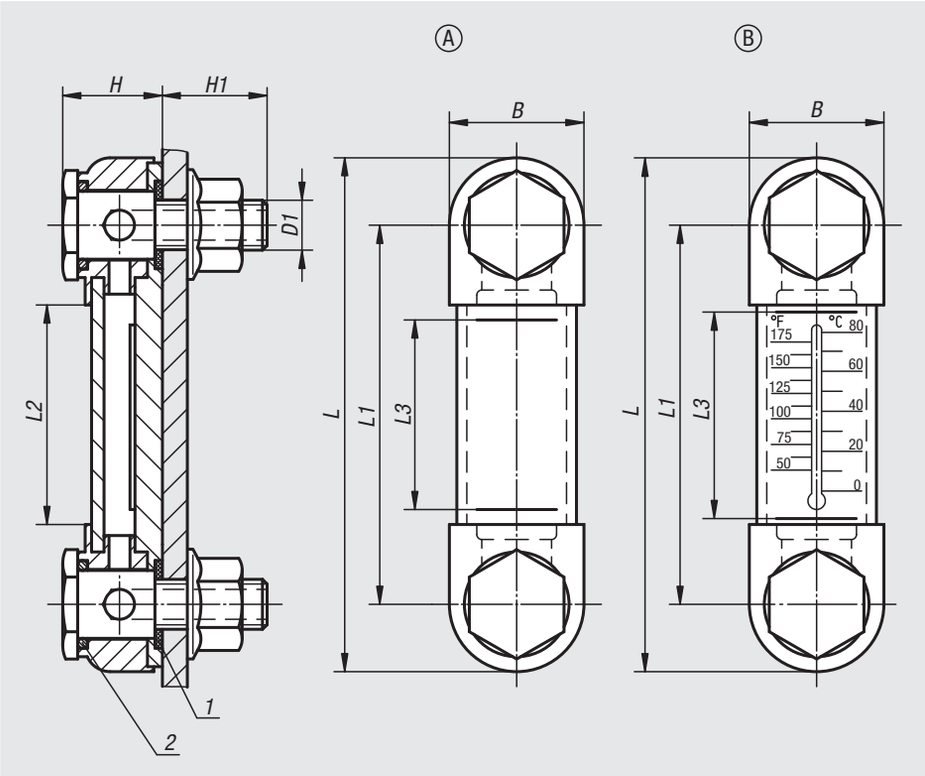

Material:
Housing thermoplastic polyamide.
O-ring and flat seal rubber (NBR).
Reflector aluminium.
Screw and hex nut steel.

Version:
Transparent housing, high mechanical stability, non-ageing, temperature resistant up to 100 °C.
Pressure resistant at 20 °C up to 10 bar, at 60 °C up to 8 bar.
Reflector painted white, line marks and scale black.
Screw and hexagon nut, galvanized.

Sample order:
nlm 28000-1127

Note:
The oil level gauges can either be fastened as shown in the illustration or screwed directly into a tapped hole. Centre distance for the fastening holes = L1 ±0.3.
The max. tightening torque for the fastening screws is 5 Nm.

Drawing reference:
Form A: without thermometer
Form B: with thermometer

1) flat seal
2) O-ring

Order No.	Form	B	D1	H	H1	L	L1	L2	L3	Number of fastening screws	Thermometer scale
28000-1076	A	27	M10	20	21	103	76	44	37	2	-
28000-1127	A	27	M12	19	18	151	127	95	80	2	-
28000-2076	B	27	M10	20	21	103	76	44	37	2	0 - 80 °C / 50 - 175 °F
28000-2127	B	27	M12	19	18	151	127	95	80	2	0 - 100 °C / 50 - 200 °F

Oil level gauges

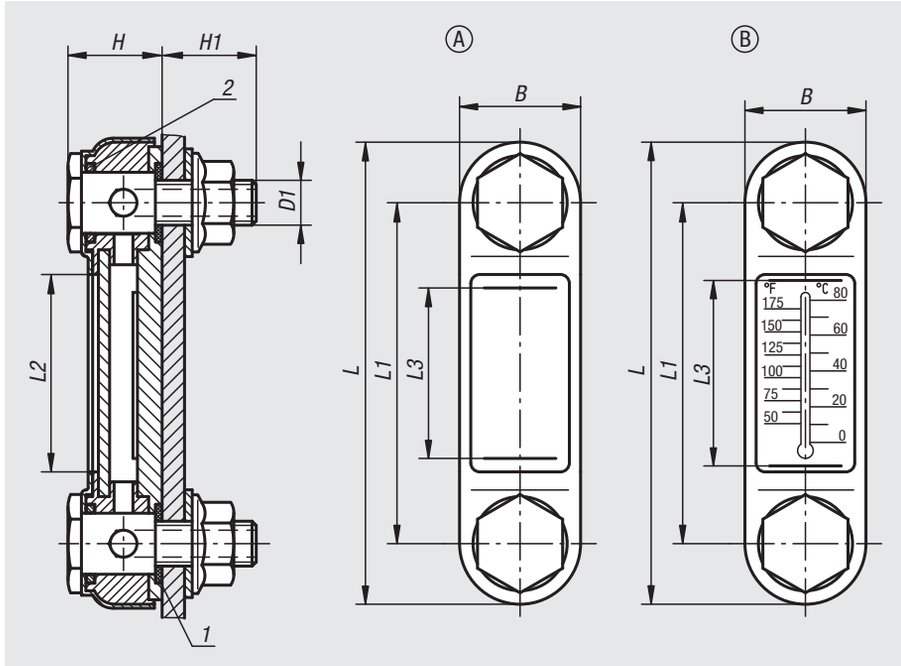

Material:
Housing steel.
Viewing glass thermoplastic polyamide.
O-ring and flat seal rubber (NBR).
Reflector aluminium.
Screw and hex nut steel.

Version:
Housing painted black.
Transparent viewing glass, high mechanical stability, non-ageing, temperature resistant with oil up to 100 °C, with water up to 70 °C.
Reflector painted white, markings and scale black.
Screw and hexagon nut, galvanized.

Sample order:
nlm 28000-107610

Note:
The oil level gauges can either be fastened as shown in the illustration or directly in the threaded hole.
Centre distance for the fastening holes = L1 ±0.5.
The oil level gauges are suitable for tanks operating without pressure.
Maximum operating temperature: 100 °C.

Drawing reference:
Form A: without thermometer
Form B: with thermometer

1) flat seal
2) O-ring

Order No.	Form	B	D1	H	H1	L	L1	L2	L3	Number of fastening screws	Thermometer scale
28000-107610	A	31	M10	24,5	20	107	76	39	37	2	-
28000-107612	A	31	M12	24,5	20	107	76	39	37	2	-
28000-112710	A	31	M10	24,5	20	156	127	90	80	2	-
28000-112712	A	31	M12	24,5	20	156	127	90	80	2	-
28000-125412	A	34	M12	33	17	286	254	200	178	2	-
28000-207610	B	31	M10	24,5	20	107	76	39	37	2	0 - 80 °C / 50 - 175 °F
28000-207612	B	31	M12	24,5	20	107	76	39	37	2	0 - 80 °C / 50 - 175 °F
28000-212710	B	31	M10	24,5	20	156	127	90	80	2	0 - 100 °C / 50 - 200 °F
28000-212712	B	31	M12	24,5	20	156	127	90	80	2	0 - 100 °C / 50 - 200 °F
28000-225412	B	34	M12	33	17	286	254	200	178	2	0 - 100 °C / 50 -200 °F

Oil level gauge

long version

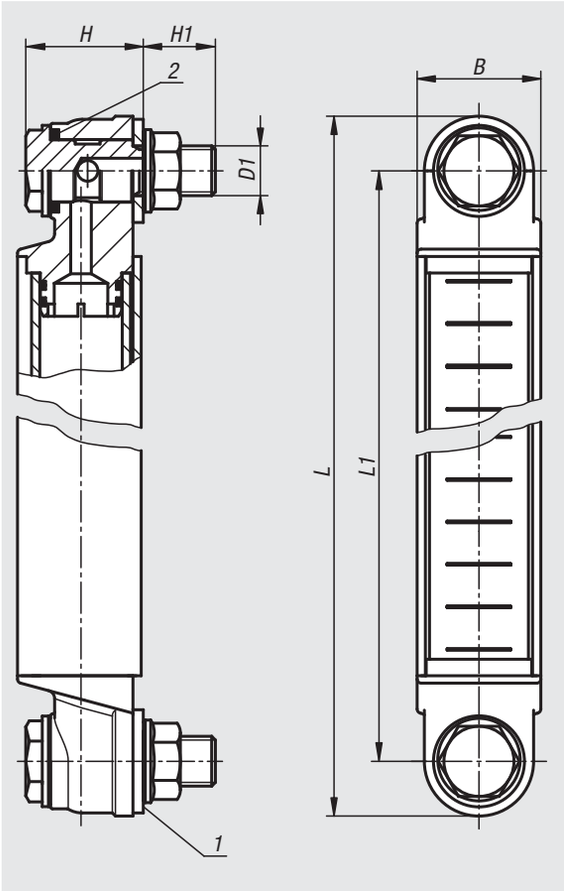

Material:
Housing aluminium.
Tube polycarbonate.
Caps polyamide.
O-ring and flat seal NBR, Shore 70.
Screw and hex. nut steel.

Version:
Viewing glass transparent.
Screws and hexagon nuts galvanized.

Sample order:
nlm 28001-1400

Note:
The oil level gauges can either be fastened as shown in the illustration or directly in the tapped hole. Centre distance for the fastening holes = L1±0.3. The maximum operating temperature is 90 °C. The maximum pressure is 1 bar. The maximum tightening torque of the fastening screws is 5 Nm.

Drawing reference:
1) flat seal
2) O-ring

Order No.	B	D1	H	H1	L	L1
28001-1300	30	M12	30	16,5	325	300
28001-1400	30	M12	30	16,5	425	400
28001-1500	30	M12	30	16,5	525	500

Oil level sight glasses

Material:
Housing in thermoplastic polyamide.
Plastic reflector.

Version:
Housing, transparent, high mechanical stability, non-ageing, temperature resistant with oil up to 90 °C, resistant to solvents but not to alcohol or frost.
Flat seal, asbestos-free.
Reflector white.

Sample order:
nlm 28004-143100

On request:
Rubber gasket (NBR).

Drawing reference:
Form A: without reflector
Form B: with reflector

1) flat seal
2) check mark
3) reflector

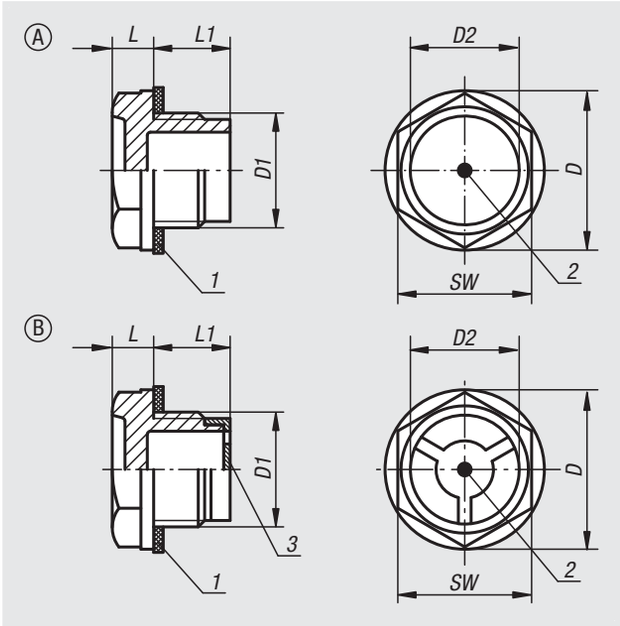

Order No.	Form	D	D1	D2	L	L1	SW	Tightening torque max. Nm
28004-120014	A	20	G1/4	15	7	8	17	6
28004-122038	A	22	G3/8	14	6,5	10,5	18	8
28004-128012	A	28	G1/2	16	8	11	24	12
28004-135034	A	35	G3/4	21	8	12	30	16
28004-143100	A	43	G1	32	11	12	36	-
28004-151114	A	51	G1 1/4	33	10	16	42	-
28004-158112	A	58	G1 1/2	40	12	16	50	-
28004-174200	A	74	G2	48	12	22	64	-
28004-1201415	A	20	M14x1,5	15	7	8	17	7
28004-1221615	A	22	M16x1,5	14	6,5	10	18	8
28004-1251815	A	25	M18x1,5	16	7	10,5	21	10
28004-1282015	A	28	M20x1,5	18	7,5	11	24	16
28004-1282215	A	28	M22x1,5	16	7,5	12,5	24	12
28004-1362615	A	36	M26x1,5	21	8,5	13,5	30	21
28004-1362715	A	36	M27x1,5	21	8,5	13,5	30	21
28004-1514015	A	51	M40x1,5	32	10	17	42	-
28004-222038	B	22	G3/8	14	6,5	10,5	18	8
28004-228012	B	28	G1/2	16	8	11	24	12
28004-235034	B	35	G3/4	21	8	12	30	16
28004-243100	B	43	G1	32	11	12	36	-
28004-251114	B	51	G1 1/4	33	10	16	42	-
28004-258112	B	58	G1 1/2	40	12	16	50	-
28004-274200	B	74	G2	48	12	22	64	-
28004-2221615	B	22	M16x1,5	14	6,5	10	18	8
28004-2251815	B	25	M18x1,5	16	7	10,5	21	10
28004-2282015	B	28	M20x1,5	18	7,5	11	24	16
28004-2282215	B	28	M22x1,5	16	7,5	12,5	24	12
28004-2362615	B	36	M26x1,5	21	8,5	13,5	30	21
28004-2362715	B	36	M27x1,5	21	8,5	13,5	30	21
28004-2514015	B	51	M40x1,5	32	10	17	42	-

28006

Oil level sight glasses

press-in

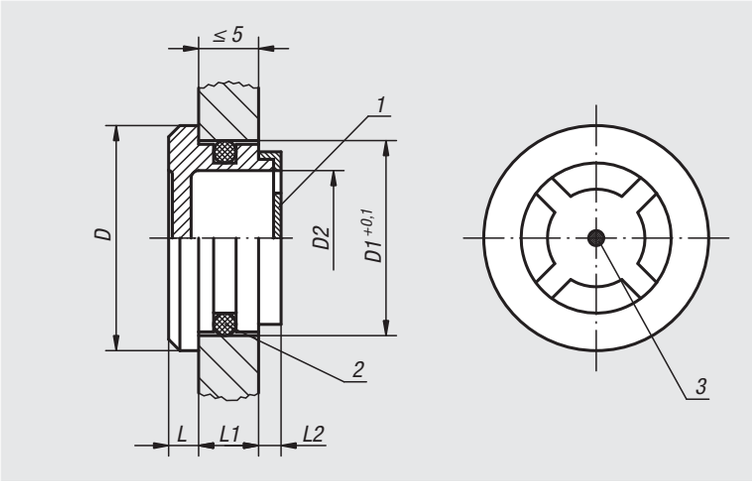

Material:
Housing thermoplastic polyamide.
O-ring NBR, Shore 70.
Reflector plastic.

Version:
Housing, transparent, high mechanical stability, non-ageing, temperature resistant up to 90 °C, resistant to solvents but not to alcohol or frost.
Reflector white.

Sample order:
nlm 28006-3026

Note:
For use where there is no internal pressure.

Drawing reference:
1) reflector
2) O-ring
3) check mark

Order No.	D	drill Ø D1	D2	L	L1	L2
28006-2420	24	20	14	4	7	3
28006-3026	30	26	20	4	8	3,5
28006-3632	36	32	24	4	9	4
28006-4238	42	38	30	4	10	4
28006-4440	44	40	32	4	10	4

28008

Oil level sight glasses

domed

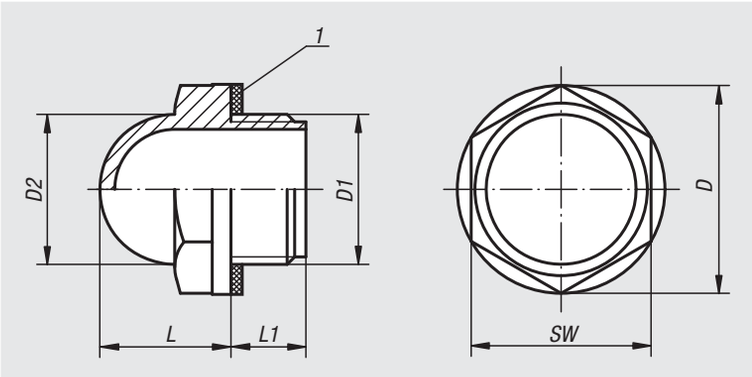

Material:
Housing in thermoplastic polyamide.

Version:
Housing, transparent, high mechanical stability, non-ageing, temperature resistant with oil up to 100 °C,
with water up to 70 °C.
Resistant to solvents but not alcohol.
Flat seal, asbestos-free.

Sample order:
nlm 28008-28012

On request:
Rubber gasket (NBR).

Drawing reference:
1) flat seal

Order No.	D	D1	D2	L	L1	SW	Tightening torque max. Nm
28008-22038	22	G3/8	15	14	10	19	8
28008-28012	28	G1/2	20	17	10	24	12
28008-35034	35	G3/4	25	20	10	30	16
28008-42100	42	G1	31	24	10,5	36	20

28010

Oil level sight glasses

aluminium

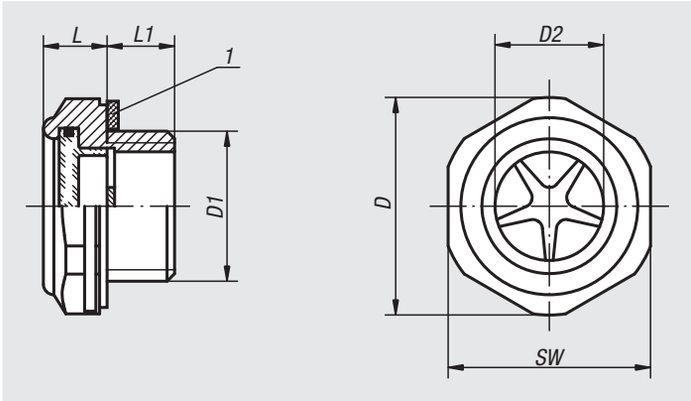

Material:
Housing in aluminium.
Reflector in aluminium or white plastic.
Polyamide viewing lens.

Version:
Transparent viewing lens,
temperature-resistant with oil up to 100 °C,
with water up to 70 °C.
Flat seal, asbestos-free.

Sample order:
nlm 28010-29012

Note:
The G3/8“ and M18x1.5 versions have a white plastic reflector.

Drawing reference:
1) flat seal

Order No.	D	D1	D2	L	L1	SW	Tightening torque max. Nm	Pressure load max. bar
28010-20014	20	G1/4	11	8	8	17	9	10
28010-24038	24,1	G3/8	12,7	9,5	9	22	12	10
28010-29012	29,7	G1/2	15	10	9	27	18	10
28010-36034	35,2	G3/4	21,9	10	11	32	24	10
28010-42100	44,1	G1	25,1	11	11	40	-	10
28010-52114	55	G1 1/4	34	13,5	12	50	-	10
28010-241815	24,5	M18x1,5	13	10	9	22	12	10
28010-292215	29,5	M22x1,5	16	10	9	27	18	10

28012

Oil level sight glasses

aluminium, glass window

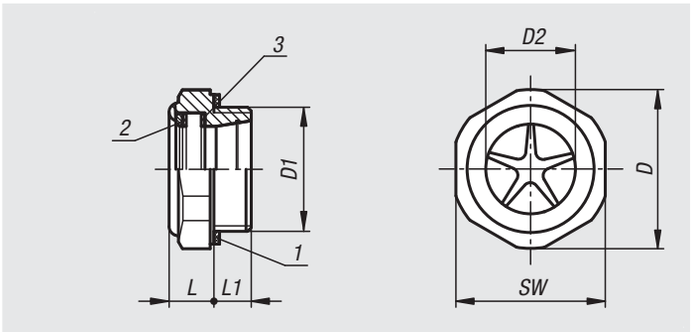

Material:
Housing, reflector in aluminium.
Natural, clear glass viewing lens.
Internal seal, Viton®.

Version:
Viewing lens, temperature-resistant to 150 °C.
Flat seal, asbestos-free.

Sample order:
nlm 28012-29012

Note:
Resists high pressure and heat. Natural glass as the viewing lens ensures optimal light transmission and high surface hardness.

Drawing reference:
1) flat seal
2) external seal
3) internal seal

Order No.	D	D1	D2	L	L1	SW	Tightening torque max. Nm	Pressure load max. bar
28012-29012	29,5	G 1/2	12	10	9	27	18	20
28012-34034	34,5	G 3/4	16	12	10	32	24	20
28012-42100	42,5	G 1	23	12	10	40	-	20
28012-292015	29,5	M20x1,5	12	10	9	27	18	20
28012-423315	42,5	M33x1,5	23	12	10	40	-	20

Screw plugs with hexagon socket

DIN 906, tapered thread

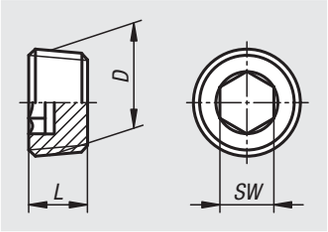

Material:
Steel or stainless steel 1.4571.

Version:
Steel galvanized.
Stainless steel bright.

Sample order:
nlm 28013-100810

Note:
Screw plugs with hexagon socket and tapered threads are suitable for plugging holes with parallel threads.

Order No. steel	Order No. stainless steel	D	L	SW
28013-100810	**28013-200810**	M8x1	8	4
28013-101010	**28013-201010**	M10x1	8	5
28013-101215	**28013-201215**	M12x1,5	10	6
28013-101415	**28013-201415**	M14x1,5	10	7
28013-101615	**28013-201615**	M16x1,5	10	8
28013-101015	**28013-201815**	M18x1,5	10	8
28013-102015	**28013-202015**	M20x1,5	10	10
28013-102215	**28013-202215**	M22x1,5	10	10
28013-102415	**28013-202415**	M24x1,5	12	12
28013-102615	**-**	M26x1,5	12	12
28013-103015	**-**	M30x1,5	12	17
28013-103615	**-**	M36x1,5	15	19
28013-104215	**-**	M42x1,5	18	22
28013-104815	**-**	M48x1,5	20	24
28013-10018	**28013-2001815**	R1/8	8	5
28013-10014	**28013-2001415**	R1/4	10	7
28013-10038	**28013-2003815**	R3/8	10	8
28013-10012	**28013-2001215**	R1/2	10	10
28013-10034	**28013-2003415**	R3/4	12	12
28013-10100	**28013-2010015**	R1	12	17
28013-10114	**-**	R1 1/4	18	22
28013-10112	**-**	R1 1/2	20	24

Screw plugs with collar and hexagon socket

DIN 908

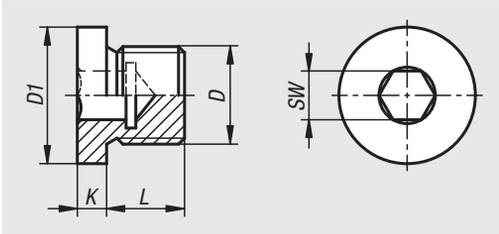

Material:
Steel.

Version:
galvanized.

Sample order:
nlm 28014-100810

Note:
Screw plugs with collar and hexagon socket for plugging holes with parallel threads.

Order No.	D	D1	K	L	SW
28014-100810	M8x1	12	3	8	4
28014-101010	M10x1	14	3	8	5
28014-101215	M12x1,5	17	3	12	6
28014-101415	M14x1,5	19	3	12	6
28014-101615	M16x1,5	21	3	12	8
28014-101815	M18x1,5	23	4	12	8
28014-102015	M20x1,5	25	4	14	10
28014-102215	M22x1,5	27	4	14	10
28014-102415	M24x1,5	29	4	14	12
28014-102615	M26x1,5	31	4	16	12
28014-102720	M27X2	32	4	16	12
28014-103015	M30x1,5	36	4	16	17
28014-103320	M33X2	39	5	16	17
28014-103615	M36x1,5	42	5	16	19
28014-104215	M42x1,5	49	5	16	22
28014-104220	M42X2	49	5	16	22
28014-104815	M48x1,5	55	5	16	24
28014-104820	M48X2	55	5	16	24
28014-10018	G1/8	14	3	8	5
28014-10014	G1/4	18	3	12	6
28014-10038	G3/8	22	3	12	8
28014-10012	G1/2	26	4	14	10
28014-10034	G3/4	32	4	16	12
28014-10100	G1	39	5	16	17
28014-10114	G1 1/4	49	5	16	22
28014-10112	G1 1/2	55	5	16	24

Screw plugs hex head with collar

DIN 910

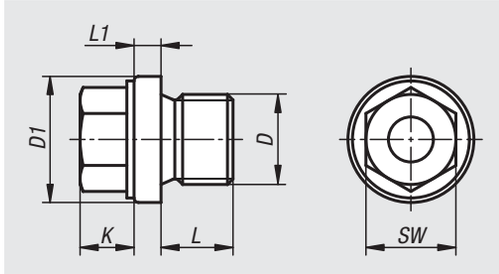

Material:
Steel.

Version:
galvanized.

Sample order:
nlm 28016-101010

Note:
Screw plugs with collar and hexagonal head for plugging holes with parallel threads.

Order No.	D	D1	K	L	L1	SW
28016-101010	M10x1	14	6	8	3	10
28016-101215	M12x1,5	17	6	12	3	13
28016-101415	M14x1,5	19	6	12	3	13
28016-101615	M16x1,5	21	6	12	3	17
28016-101815	M18x1,5	23	8	12	4	17
28016-102015	M20x1,5	25	8	14	4	19
28016-102215	M22x1,5	27	8	14	4	19
28016-102415	M24x1,5	29	9	14	4	22
28016-102615	M26x1,5	31	10	16	4	24
28016-102720	M27X2	32	10	16	4	24
28016-103015	M30x1,5	36	10	16	4	24
28016-103320	M33X2	39	11	16	5	27
28016-103615	M36x1,5	42	11	16	5	27
28016-104215	M42x1,5	49	12	16	5	30
28016-104220	M42X2	49	12	16	5	30
28016-104815	M48x1,5	55	12	16	5	30
28016-104820	M48X2	55	12	16	5	30
28016-10018	G1/8	14	6	8	3	10
28016-10014	G1/4	18	6	12	3	13
28016-10038	G3/8	22	6	12	3	17
28016-10012	G1/2	26	8	14	4	19
28016-10034	G3/4	32	10	16	4	24
28016-10100	G1	39	11	16	5	27
28016-10114	G1 1/4	49	12	16	5	30
28016-10112	G1 1/2	55	12	16	5	30

28018

Screw plugs

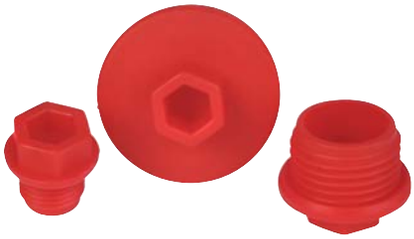

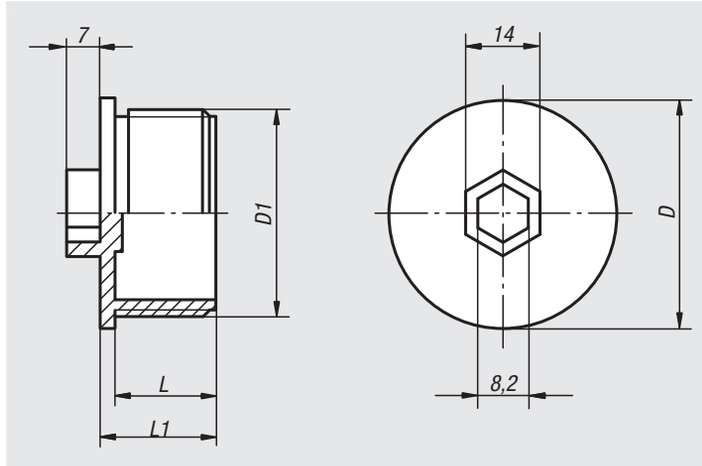

Material:
Elastomer, soft polyurethane

Version:
Red

Sample order:
nlm 28018-038

Note:
The double-lip seal guarantees a seal for pressures of 2-3 bar. It also keeps paint out during painting.

Order No.	D	D1	L	L1
28018-018	16,2	G1/8	8	10
28018-014	18,1	G1/4	9,9	12,5
28018-038	21	G3/8	9	11
28018-012	25,2	G1/2	11	14
28018-034	31,3	G3/4	11,5	14
28018-100	36	G1	12	15,5

28020

Screw plugs

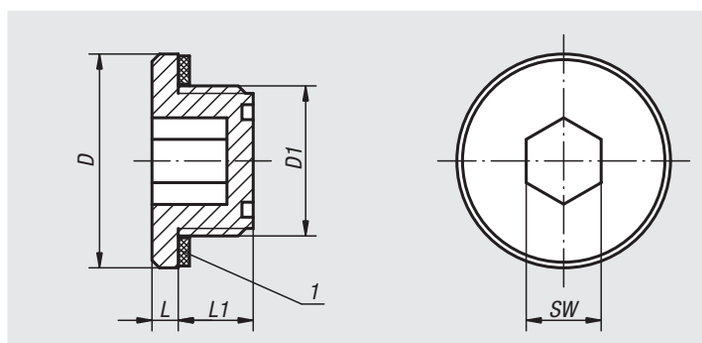

Material:
Thermoplastic polyamide 66, reinforced with 30% fibreglass.

Version:
Black. Flat seal asbestos-free

Sample order:
nlm 28020-22038

Note:
Temperature resistance:
Continuous operating temperature 100°C.
Short-term operating temperature 120°C.

On request:
O-ring or materials with higher stability.

Drawing reference:
1) flat seal

Order No.	D	D1	L	L1	SW	Tightening torque max. Nm
28020-18014	18,2	G1/4	2,5	8	6	3
28020-22038	22,5	G3/8	3,5	10,5	8	6
28020-28012	28,5	G1/2	3,5	10,5	10	8
28020-35034	35	G3/4	4	10,5	12	10
28020-201415	20	M14x1,5	2,5	8	6	3
28020-221615	22,5	M16x1,5	3,5	11	8	6
28020-261815	26	M18x1,5	3	10	10	7
28020-282015	28,5	M20x1,5	3	11	10	7
28020-282215	28,5	M22x1,5	3,5	10,5	10	7
28020-352615	35	M26x1,5	3	12	12	10

Screw plugs

with hexagon socket

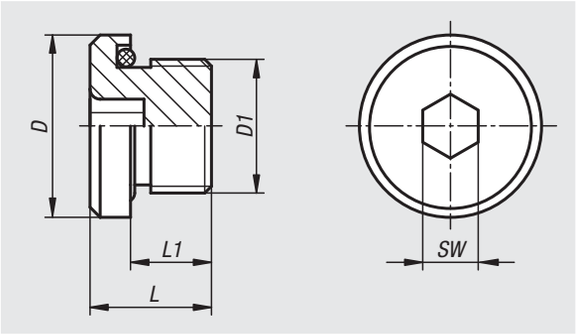

Material:
Steel 1.0737.
O-ring NBR, Shore 90.

Version:
Bright.

Sample order:
nlm 28021-15018

Note:
Operating temperature: -20°C / +100°C.
Operating pressure: max. 70 bar for static application.

Order No.	D	D1	L	L1	SW
28021-15018	15	G 1/8	13	9	4
28021-19014	19	G1/4	16	11	6
28021-22038	22	G 3/8	17	11	6
28021-27012	27	G 1/2	20	14	8
28021-32034	32	G 3/4	20	14	12
28021-40001	40	G 1	22	16	12
28021-50114	50	G1 1/4	25	18	12
28021-55112	55	G 1 1/2	24	17	24
28021-141010	15	M10X1	12	8	5
28021-171215	17	M12X1,5	16	10	6
28021-191415	19	M14X1,5	16	10	6
28021-221615	22	M16X1,5	16	10	6
28021-251815	25	M18X1,5	17	11	8
28021-272015	27	M20X1,5	18	12	8
28021-282215	28	M22X1,5	18	12	10
28021-322615	32	M26X1,5	20	13,5	12
28021-322702	32	M27x2	20	13,5	12
28021-403302	40	M33x2	21	15	17
28021-504202	50	M42x2	24	17	22
28021-554802	55	M48x2	24	17	24

Press-in plugs

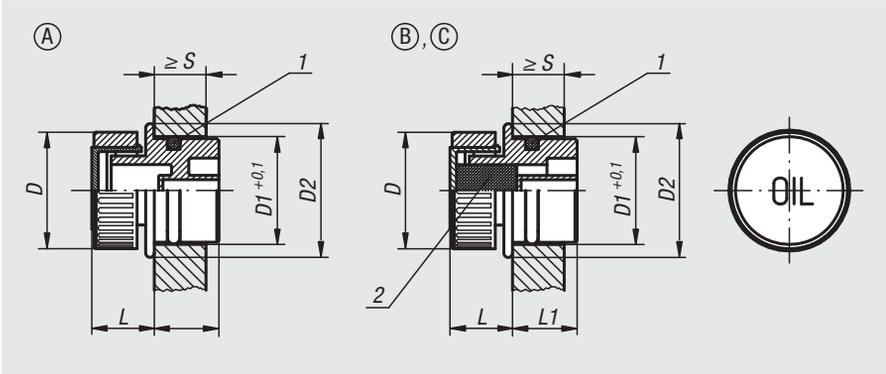

Material:
Housing and cap thermoplastic polyamide 66.
Air filter polyurethane (PU foam).
O-ring rubber (NBR).

Version:
Housing black.
Cap red.
Filter mesh 50 µm.

Sample order:
nlm 28022-33030

Note:
Temperature resistant to 100°C.

Drawing reference:
Form A: without vent
Form B: with vent
Form C: with vent and air filter

1) O-ring
2) air filter Form C only

Order No. Form A	Order No. Form B	Order No. Form C	D	drill Ø D1	D2	L	L1	S min.
28022-13018	**28022-23018**	**28022-33018**	30	18	23	14	14	8
28022-13020	**28022-23020**	**28022-33020**	30	20	24	14	15,5	8
28022-13026	**28022-23026**	**28022-33026**	30	26	30	14	16,5	9,5
28022-13030	**28022-23030**	**28022-33030**	30	30	34	14	17	9,5

Notes

28024

Screw plugs with magnet

Material:
Thermoplastic polyamide 66. Ferrite permanent magnet.

Version:
Black. Flat seal asbestos-free

Sample order:
nlm 28024-22038

Note:
Temperature resistant with oil up to 100°C, with water up to 70°C.
The magnetic effect of the screw plug attracts iron particles in the oil.
Screwing the plug into the drain outlet diminishes possible damage to mechanical components.

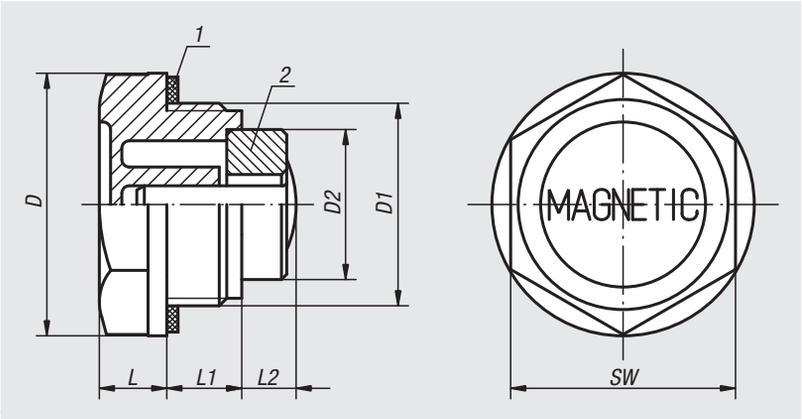

Drawing reference:
1) flat seal
2) magnet

Order No.	D	D1	D2	L	L1	L2	SW
28024-20014	20	G1/4	8	7	9	5	17
28024-22038	22	G3/8	13	7,5	10	10	18
28024-27012	27	G1/2	13	8	11	9	24
28024-34034	34	G3/4	19,6	9	11	6,5	30
28024-42100	42	G1	19,6	10,5	12	14	35
28024-201415	20	M14x1,5	8	7	9	5	17

28026

Screw plugs aluminium with magnet

Material:
Aluminium. Ferrite permanent magnet.

Version:
Bright. Flat seal asbestos-free.

Sample order:
nlm 28026-24038

Note:
The magnetic effect of the screw plug attracts iron particles in the oil.
Screwing the plug into the drain outlet diminishes possible damage to mechanical components.

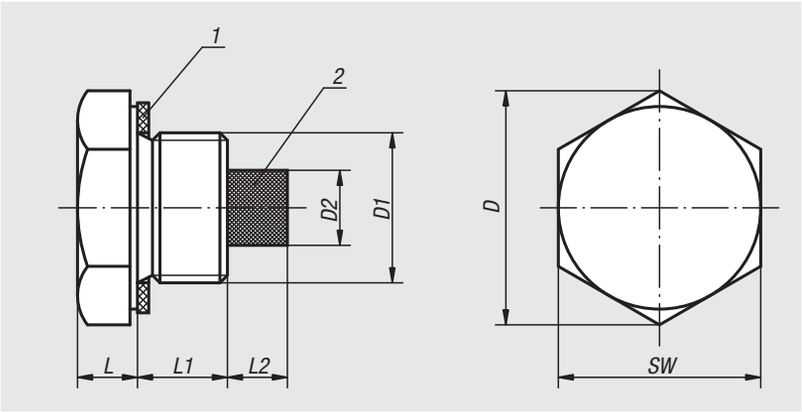

Drawing reference:
1) flat seal
2) magnet

Order No.	D	D1	D2	L	L1	L2	SW
28026-21014	21	G1/4	5	7	10	6	19
28026-24038	24,5	G3/8	8	7	10	7	22
28026-30012	30	G1/2	10	8	10	7	27
28026-36034	36,5	G3/4	13	8	10	7	34
28026-42100	42,5	G1	13	8	14	7	40

Screw plugs

aluminium

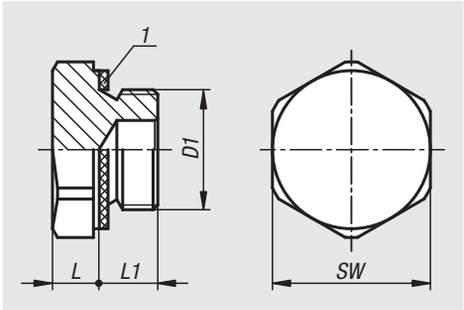

Material:
Aluminium.

Version:
Bright. Flat seal asbestos-free.

Sample order:
nlm 28027-19014

On request:
Cap marked OIL.

Drawing reference:
1) flat seal

Order No.	D1	L	L1	SW
28027-141010	M10x1	5	8	14
28027-171215	M12x1,5	6	8	17
28027-171415	M14x1,5	6	8	17
28027-221615	M16x1,5	7	10	22
28027-221815	M18x1,5	7	10	22
28027-242015	M20x1,5	7	10	24
28027-19014	G1/4	7	10	19
28027-22038	G 3/8	7	10	22
28027-27012	G 1/2	8	10	27
28027-34034	G 3/4	8	10	34
28027-40100	G 1	8	14	40

Screw plugs

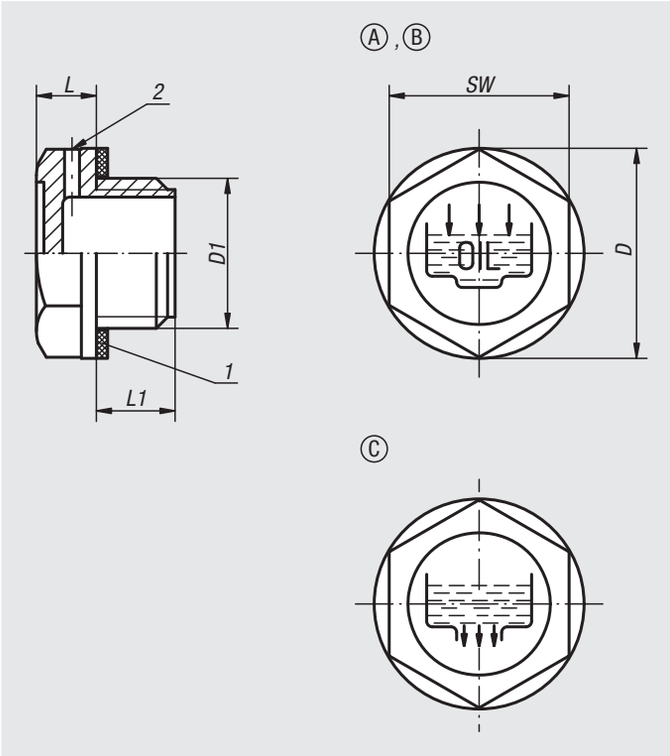

Material:
Thermoplastic polyamide 66

Version:
Black. Flat seal asbestos-free

Sample order:
nlm 28028-142100

Note:
Temperature resistant to 100°C.

Drawing reference:
Form A: with fill symbol
Form B: with fill symbol and vent hole
Form C: with drain symbol

1) flat seal
2) vent hole Form B only

Order No. Form A	Order No. Form B	Order No. Form C	D	D1	L	L1	SW	Tightening torque max. Nm
28028-119014	**28028-219014**	**28028-319014**	19,5	G1/4	7	9	17	5
28028-122038	**28028-222038**	**28028-322038**	22	G3/8	7,5	10	18	8
28028-128012	**28028-228012**	**28028-328012**	28	G1/2	7,5	11	24	9
28028-134034	**28028-234034**	**28028-334034**	34	G3/4	9	11	30	11
28028-142100	**28028-242100**	**28028-342100**	42	G1	10,5	12	35	-
28028-151114	**28028-251114**	**28028-351114**	51	G1 1/4	12	13,5	42	-
28028-158112	**28028-258112**	**28028-358112**	58	G1 1/2	10	14,5	50	-
28028-174200	**28028-274200**	**28028-374200**	74	G2	13,5	16	64	-
28028-1191415	**28028-2191415**	**28028-3191415**	19,5	M14x1,5	7	9	17	5
28028-1211615	**28028-2211615**	**28028-3211615**	21	M16x1,5	7,5	10	18	6
28028-1261815	**28028-2261815**	**28028-3261815**	26	M18x1,5	7,5	10	21	7
28028-1282015	**28028-2282015**	**28028-3282015**	28	M20x1,5	8	10	24	8
28028-1282215	**28028-2282215**	**28028-3282215**	28	M22x1,5	8	11	24	10
28028-1524015	**28028-2524015**	**28028-3524015**	52	M40x1,5	10	13	42	-

Screw plugs

with dipstick

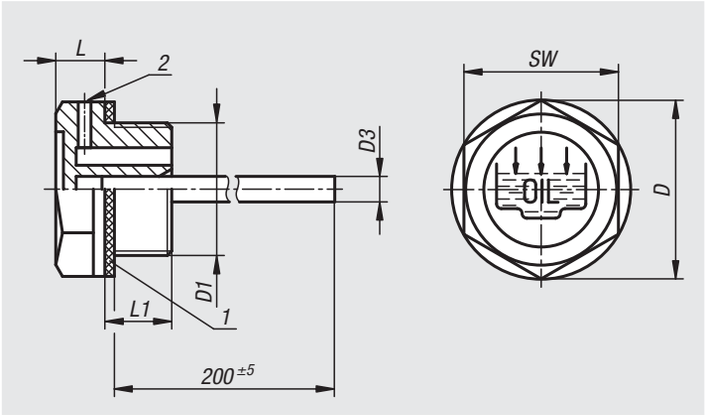

Material:
Thermoplast, polyamide 66.
Dipstick steel, zinc phosphated.

Version:
Flat seal asbestos-free.

Sample order:
nlm 28029-122038

Note:
Operating temperature: max. 100°C.
Form B has a vent hole on the side of the hexagon head with a diameter of between 2 and 3.5 mm, depending on the size of the screw plug.

Drawing reference:
1) flat seal
2) vent hole Form B only

Order No.	Form	D	D1	D3	L	L1	SW
28029-119014	A	19	G1/4	4	7	9	17
28029-122038	A	22	G 3/8	4	7,5	10	18
28029-128012	A	28	G 1/2	4	7,5	11	24
28029-134034	A	34	G 3/4	5	9	11	30
28029-142100	A	42	G 1	5	10,5	12	35
28029-151114	A	51	G1 1/4	5	12	13,5	42
28029-1191415	A	19	M14X1,5	4	7	9	17
28029-1211615	A	21	M16X1,5	4	7,5	10	18
28029-1261815	A	26	M18X1,5	4	7,5	10	21
28029-1282015	A	28	M20X1,5	4	8	10	24
28029-1282215	A	28	M22X1,5	4	8	11	24
28029-219014	B	19	G1/4	4	7	9	17
28029-222038	B	22	G 3/8	4	7,5	10	18
28029-228012	B	28	G 1/2	4	7,5	11	24
28029-234034	B	34	G 3/4	5	9	11	30
28029-242100	B	42	G 1	5	10,5	12	35
28029-251114	B	51	G1 1/4	5	12	13,5	42
28029-2191415	B	19	M14X1,5	4	7	9	17
28029-2211615	B	21	M16X1,5	4	7,5	10	18
28029-2261815	B	26	M18X1,5	4	7,5	10	21
28029-2282015	B	28	M20X1,5	4	8	10	24

Plugs fill only

knurled cap

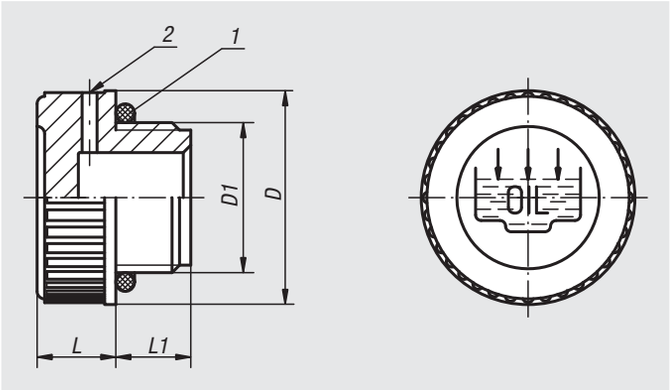

Material:
Thermoplastic polyamide 66;
O-ring in rubber (NBR)

Version:
black.

Sample order:
nlm 28030-128012

Note:
Temperature resistant:
oil up to 100 °C
water up to 70 °C.

Form A: with fill symbol
Form B: with fill symbol and vent hole

Drawing reference:
1) O-ring
2) vent hole only Form B

Order No.	Form	D	D1	L	L1
28030-120014	A	20	G1/4	9	9
28030-120038	A	20,5	G3/8	9	10
28030-128012	A	28	G1/2	10,5	10,5
28030-131034	A	31	G3/4	12	11
28030-139100	A	39	G1	12	12
28030-149114	A	49	G1 1/4	13	13,5
28030-155112	A	55	G1 1/2	14,7	14,5
28030-168200	A	68,5	G2	15	16
28030-1201415	A	20	M14x1,5	9	9
28030-1201615	A	20	M16x1,5	9	10
28030-1281815	A	28	M18x1,5	10,5	10
28030-1282015	A	28	M20x1,5	10,5	10
28030-1282215	A	28	M22x1,5	10,5	10
28030-220014	B	20	G1/4	9	9
28030-220038	B	20,5	G3/8	9	10
28030-228012	B	28	G1/2	10,5	10,5
28030-231034	B	31	G3/4	12	11
28030-239100	B	39	G1	12	12
28030-249114	B	49	G1 1/4	13	13,5
28030-255112	B	55	G1 1/2	14,7	14,5
28030-268200	B	68,5	G2	15	16
28030-2201415	B	20	M14x1,5	9	9
28030-2201615	B	20	M16x1,5	9	10
28030-2281815	B	28	M18x1,5	10,5	10
28030-2282015	B	28	M20x1,5	10,5	10
28030-2282215	B	28	M22x1,5	10,5	10

28032

Caps for filler necks

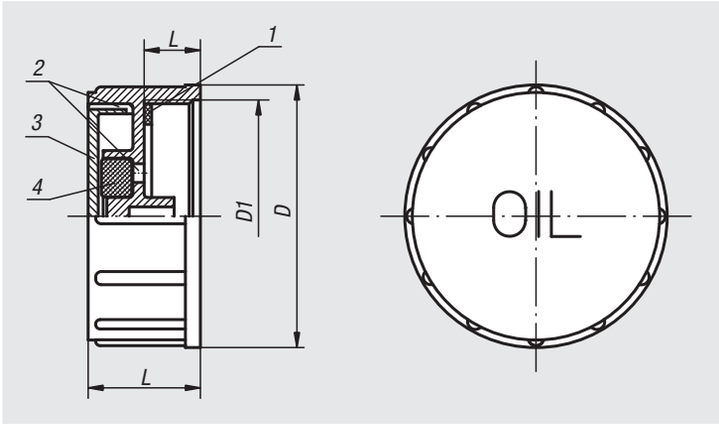

Material:
Housing and cap thermoplastic polyamide 66.
Air filter polyurethane (PU foam).
Flat seal NBR, Shore 70.

Version:
Black housing.
Red cap.
Filter mesh 40 µm.

Sample order:
nlm 28032-67200

Note:
Temperature resistant to 100°C.

On request:
Cap in yellow for diesel oil.

Drawing reference:
1) flat seal
2) vent
3) cap
4) air filter

Order No.	D	D1	L	L1
28032-67200	67,5	G2	30	15
28032-676020	67,5	M60x2	30	15

28034

Vent screws

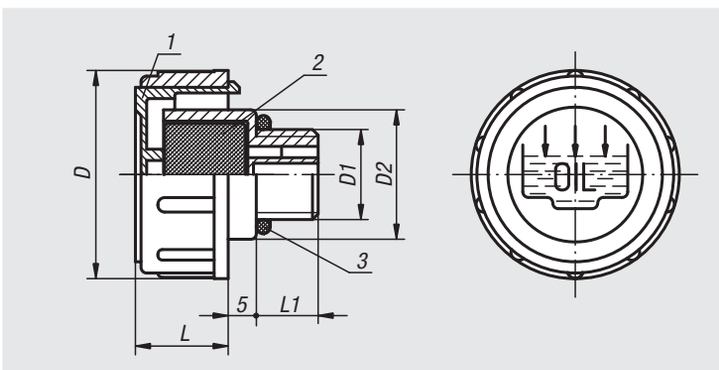

Material:
Housing, cap in thermoplastic polyamide 66.
Air filter (Form B only) in polyurethane (PU foam).
O-ring in rubber (NBR).

Version:
Black housing. Red cap. Filter mesh 60 µm.

Sample order:
nlm 28034-147034

Note:
Temperature resistant:
oil up to 100 °C
water up to 70 °C.
The removable cap allows easy cleaning of the air filter.

Form A: without air filter
Form B: with air filter

Drawing reference:
1) cap
2) air filter Form B only
3) O-ring

Order No. Form A	Order No. Form B	D	D1	D2	L	L1
28034-136038	**28034-236038**	36	G3/8	23	17	11
28034-141012	**28034-241012**	41	G1/2	28	18	12
28034-147034	**28034-247034**	47	G3/4	33	17	12
28034-152100	**28034-252100**	52	G1	38	20	12
28034-163114	**28034-263114**	63	G1 1/4	49	23	13
28034-163112	**28034-263112**	63	G1 1/2	55	23	13,5
28034-1361615	**28034-2361615**	36	M16x1,5	23	17	11
28034-1411815	**28034-2411815**	41	M18x1,5	28	17,5	12
28034-1412015	**28034-2412015**	41	M20x1,5	28	17,5	12
28034-1412215	**28034-2412215**	41	M22x1,5	28	17,5	12

Vent screws

with splash guard

Material:
Housing and cap thermoplastic polyamide 66.
Air filter polyurethane (PU foam).
Flat seal NBR, Shore 70.

Version:
Black housing.
Red cap.
Filter mesh 40 µm.

Sample order:
nlm 28036-30038

Note:
Temperature resistant to 100°C.

Drawing reference:
1) flat seal
2) cap
3) air filter

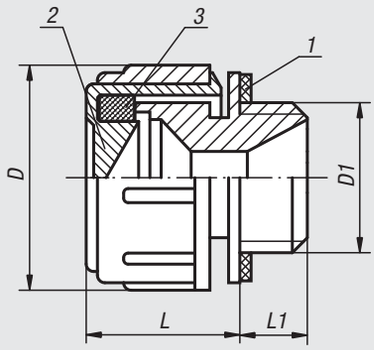

splash guard

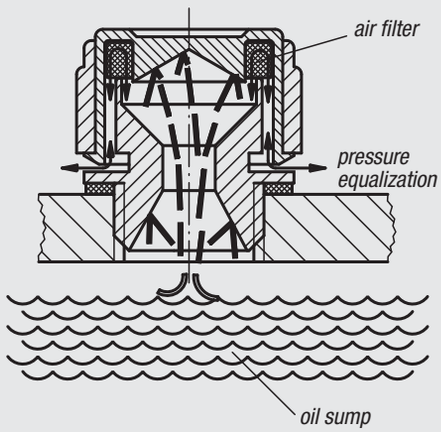

Gears partly immersed in an oil sump create an oil spray that may cause oil to leak from the vent cap. To avoid this the screw has been fitted with a splash guard. Only a small part of the oil spray can pass through the lower tapered bore. The oil that does reach the cap underside is redirected in such a way that it does not notably hinder the venting process.

Order No.	D	D1	L	L1
28036-30014	30	G1/4	21	10
28036-30038	30	G3/8	21	10
28036-30012	30	G1/2	21	10

Vent screws

with check valve

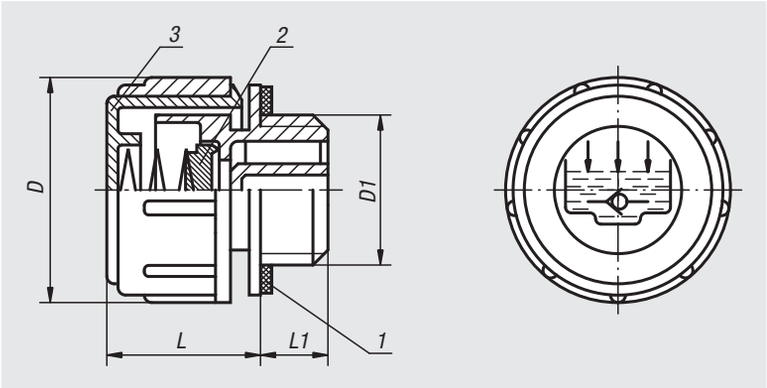

Material:
Housing and cap thermoplastic polyamide 66.
Spring stainless steel.
Lift disc and flat seal rubber (NBR).

Version:
Housing black.
Cap red.

Sample order:
nlm 28038-30014

Note:
Temperature resistant:
oil up to 100 °C
water up to 70 °C.
Opening pressure 0.20 – 0.25 bar.

Drawing reference:
1) flat seal
2) lift disc
3) cap

Operating principle

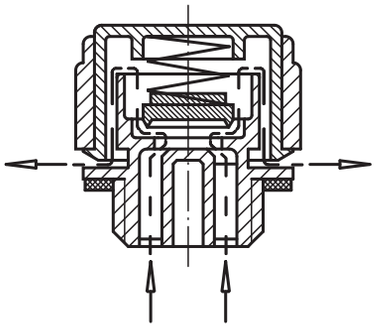

opening pressure
0.2 - 0.25 bar

Order No.	D	D1	L	L1
28038-30014	30	G1/4	21	10
28038-30038	30	G3/8	21	10
28038-30012	30	G1/2	21	10

28040

Vent screws brass

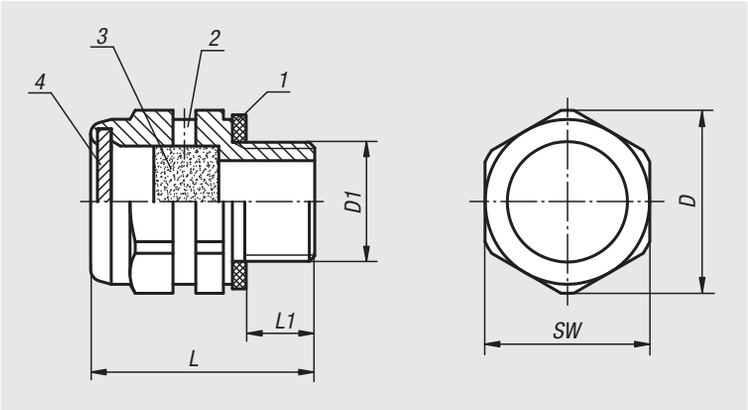

Material:
Housing and cap brass.
Air filter galvanized steel wire mesh.

Version:
Air filter mesh 50 - 60 µm.
Flat seal asbestos-free.

Sample order:
nlm 28040-20014

Drawing reference:
1) flat seal
2) vent hole 2x
3) air filter
4) cap

Order No.	D	D1	L	L1	SW
28040-20014	20	G1/4	24,5	7,5	18
28040-24038	24,5	G3/8	24,5	8,5	22
28040-30012	30	G1/2	24,5	8,5	27

28042

Vent screws brass

with check valve

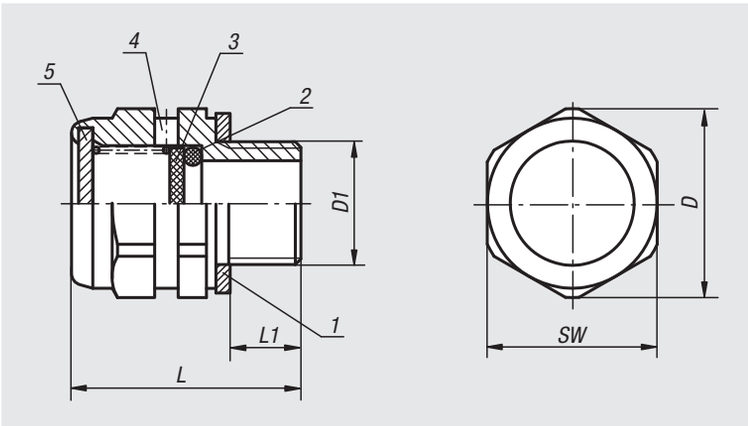

Material:
Housing and cap brass.
Spring stainless steel.
Lift disc aluminium.
O-ring rubber (NBR).

Version:
Flat seal asbestos-free.

Sample order:
nlm 28042-20014

Note:
Opening pressure 0.3 bar (±0.1).

Functional principle:
See 28038 vent screws with check valve.

Drawing reference:
1) flat seal
2) O-ring
3) lift disc
4) vent hole 2x
5) cap

Order No.	D	D1	L	L1	SW
28042-20014	20	G1/4	24,3	7,5	18
28042-24038	24,5	G3/8	24,5	8,5	22
28042-30012	30	G1/2	24,5	8,5	27

Press-in plugs

with dipstick

Material:
Housing and cap thermoplastic polyamide 66.
Air filter polyurethane (PU foam).
Dipstick zinc.
O-ring NBR, Shore 70.

Version:
Housing black.
Cap red.
Filter mesh 50 µm.
Dipstick phosphated.

Sample order:
nlm 28048-13018

Note:
Temperature resistant up to 100°C.

On request:
Min-Max markings.

Drawing reference:
Form A: without vent
Form B: with vent
Form C: with vent and air filter

1) O-ring
2) air filter Form C only

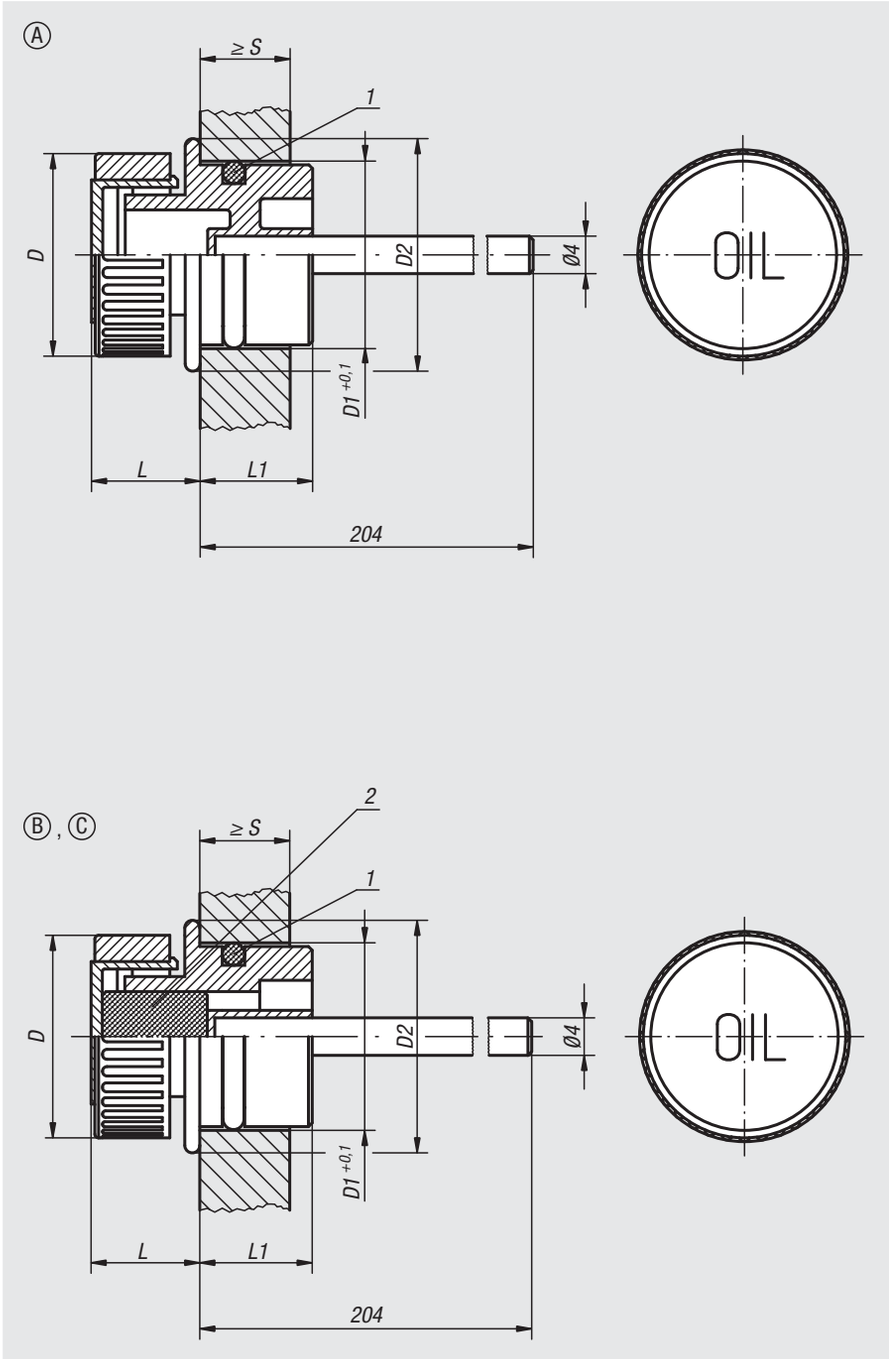

Order No. Form A	Order No. Form B	Order No. Form C	D	drill Ø D1	D2	L	L1	S min.
28048-13018	**28048-23018**	**28048-33018**	30	18	23	14	14	8

Vent screws

with dipstick

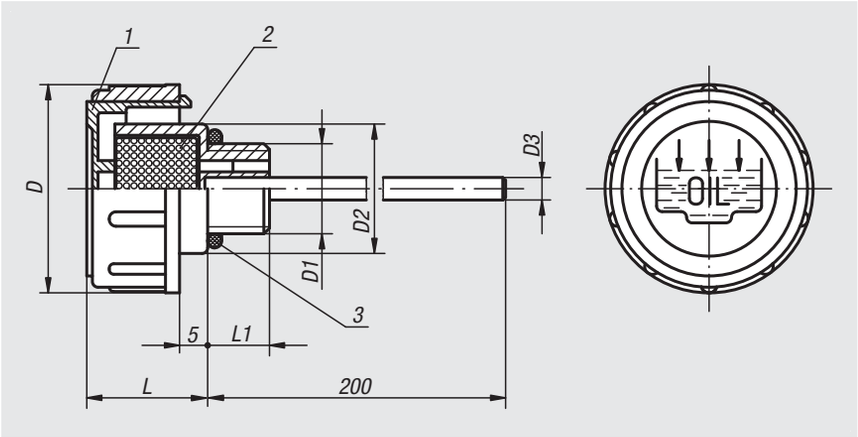

Material:
Housing and cap thermoplastic polyamide 66.
Air filter polyurethane (PU foam).
Dipstick zinc.
O-ring NBR, Shore 70.

Version:
Housing black.
Cap red.
Filter mesh 50 µm.
Dipstick phosphated.

Sample order:
nlm 28054-141012

Note:
Temperature resistant up to 100 °C.
The removable cap allows easy cleaning of the air filter.
Form A: without air filter
Form B: with air filter

On request:
Min-Max markings.

Drawing reference:
1) cap
2) air filter Form B only
3) O-ring

Order No.	Form	D	D1	D2	D3	L	L1
28054-136038	A	36	G3/8	23	4	17	11
28054-141012	A	41	G1/2	28	4	18	12
28054-147034	A	47	G3/4	33	5	17	12
28054-152100	A	52	G1	38	5	20	12
28054-163114	A	63	G1 1/4	49	5	23	13
28054-163112	A	63	G1 1/2	55	5	23	13,5
28054-1361615	A	36	M16x1,5	23	4	17	11
28054-1411815	A	41	M18x1,5	28	4	17,5	12
28054-1412015	A	41	M20x1,5	28	4	17,5	12
28054-1412215	A	41	M22x1,5	28	4	17,5	12
28054-236038	B	36	G3/8	23	4	17	11
28054-241012	B	41	G1/2	28	4	18	12
28054-247034	B	47	G3/4	33	5	17	12
28054-252100	B	52	G1	38	5	20	12
28054-263114	B	63	G1 1/4	49	5	23	13
28054-263112	B	63	G1 1/2	55	5	23	13,5
28054-2361615	B	36	M16x1,5	23	4	17	11
28054-2411815	B	41	M18x1,5	28	4	17,5	12
28054-2412015	B	41	M20x1,5	28	4	17,5	12
28054-2412215	B	41	M22x1,5	28	4	17,5	12

Vent screws

with check valve and dipstick

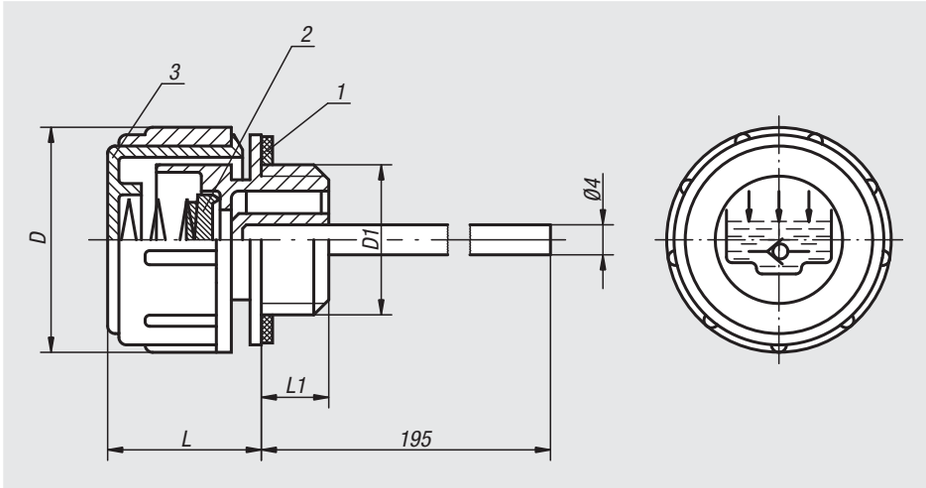

Material:
Housing and cap thermoplastic polyamide.
Spring stainless steel.
Dipstick zinc.
Lift disc and seal rubber (NBR).

Version:
Housing black.
Cap red.
Dipstick phosphated.

Sample order:
nlm 28058-30038

Note:
Temperature resistant:
oil up to 100 °C
water up to 70 °C.
Opening pressure 0.20 – 0.25 bar.

On request:
Min-Max markings.

Drawing reference:
1) flat seal
2) lift disc
3) cap

Operating principle

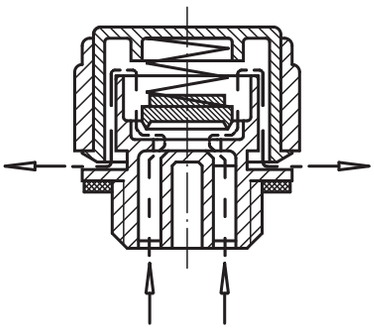

opening pressure
0.2 - 0.25 bar

Order No.	D	D1	L	L1
28058-30038	30	G3/8	21	10
28058-30012	30	G1/2	21	10

Dipsticks

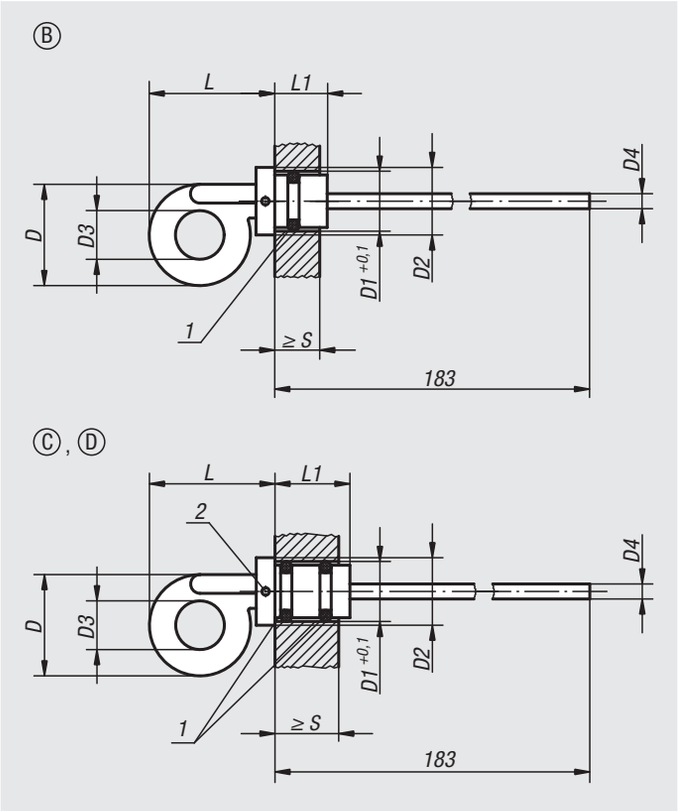

Material:
Grip thermoplastic polyamide.
Dipstick zinc.
O-ring NBR, Shore 70.

Version:
Black handle.
Dipstick, phosphated.

Sample order:
nlm 28060-23218

Note:
Temperature resistant up to 100°C.

Drawing reference:
Form B: with vent hole
Form C: without vent hole
Form D: with vent hole

1) O-ring
2) Form D only

Order No.	Form	D	drill Ø D1	D2	D3	D4 Ø	L	L1	S min.
28060-22714	B	27	14	18	13	4	34	13	10
28060-23218	B	32	18	24	14	5	45	17	9
28060-23220	B	32	20	24	14	5	44,5	18	10
28060-32714	C	27	14	18	13	4	34	20	17
28060-33012	C	27	12	18	14	4	36	20	16
28060-33318	C	33	18	24	14	5	44	21	17,5
28060-33520	C	35	20	24	16	5	46	21	17,5
28060-42714	D	27	14	18	13	4	34	20	17
28060-43318	D	33	18	24	14	5	44	21	17,5

Filler necks

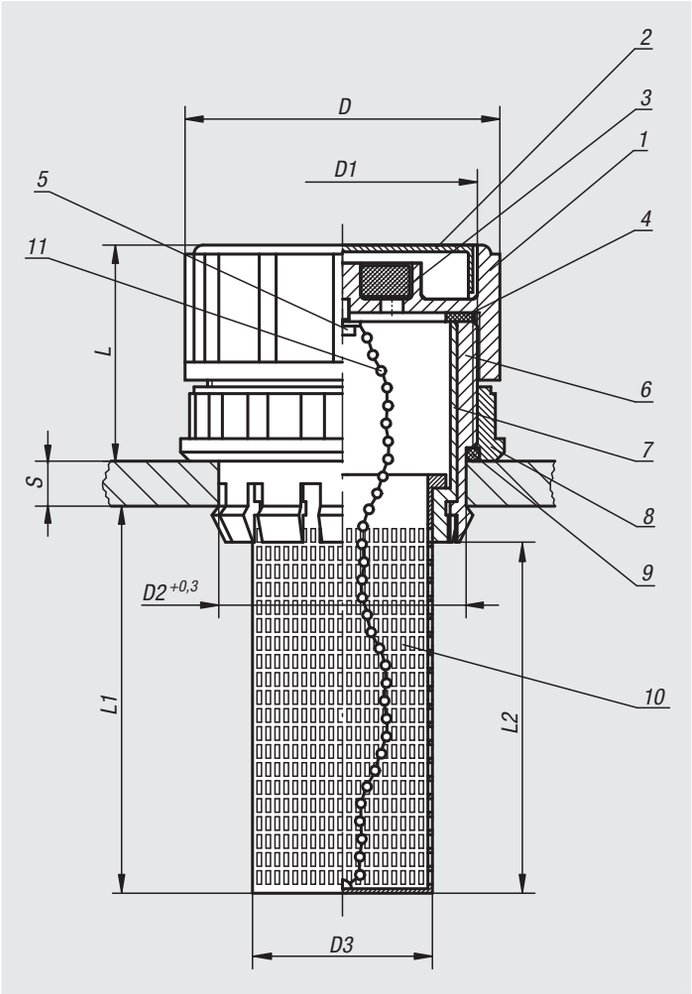

Material, version:
1. Housing black thermoplastic polyamide 66.

2. Sealing cap red thermoplastic polyamide 66.

3. Air filter polyurethane (PU foam), filter grade 40 µm.

4. Flat seal NBR

5. Fastening screw nickel-plated steel.

6. Press-in unit black thermoplastic polyamide 66.

7. Stop sleeve black thermoplastic polyamide 66.

8. Fastening nut black polyamide 66.

9. O-ring NBR, Shore 70.

10. Filler sieve black thermoplastic polypropylene.

11. Chain nickel-plated brass.

Sample order:
nlm 28070-706020

Note:
Temperature resistant up to 80 °C.

Order No.	D	D1	D2	D3	L	L1	L2	S
28070-706020	70	M60x2	55	38	46,5	88	80	2 - 8

Filler necks

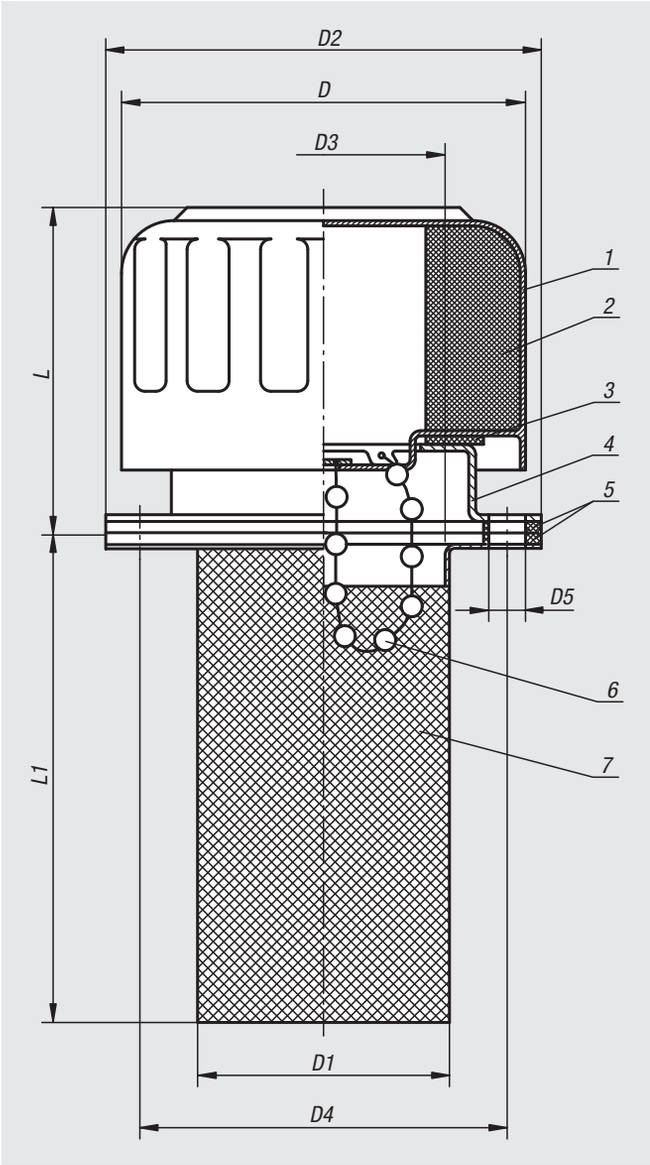

Material, version:
1. Filler housing chrome steel

2. Air filter polyurethane (PU foam), filter mesh 40 µm. Flow rate up to 720 l/min

3. Flat seal cork

4. Mounting flange with fastening screws, bayonet fitting

5. Flat seal cork

6. Chain nickel-plated brass

7. Filler sieve galvanized steel

Sample order:
nlm 28071-45

Note:
The filler necks are supplied with seals and M5 fastening screws.

Not suitable for water tanks.

Order No.	Version	D	D1	D2	D3	D4	D5	L	L1
28071-45	without chain	46,5	27,5	52	25	41,3	6 (3x)	43	66
28071-77	with chain	80	49	83	44	71,5	6 (6x)	57	80

Filler necks

Material, version:
1. Sealing cap red Polyamide 66 thermoplastic.

2. Filler sieve black Polypropylene thermoplastic.

3 Flange galvanized steel.

4. Fastening screws galvanized steel.

5 Flange seal cork.

6. Chain brass.

Sample order:
nlm 28072-170

Note:
Form A: the max. pressure while venting is 50 mbar (0.73 psi) with a max. air volume of 500 l/min. The air filter prevents dirt entering.

Form B: contains a plastic vent and aeration valve. The opening pressure while venting is 0.35 bar (±0.05 bar). The opening pressure while aerating is 0.05 bar. This form is suitable for applications where the airflow needs to be controlled in both directions.

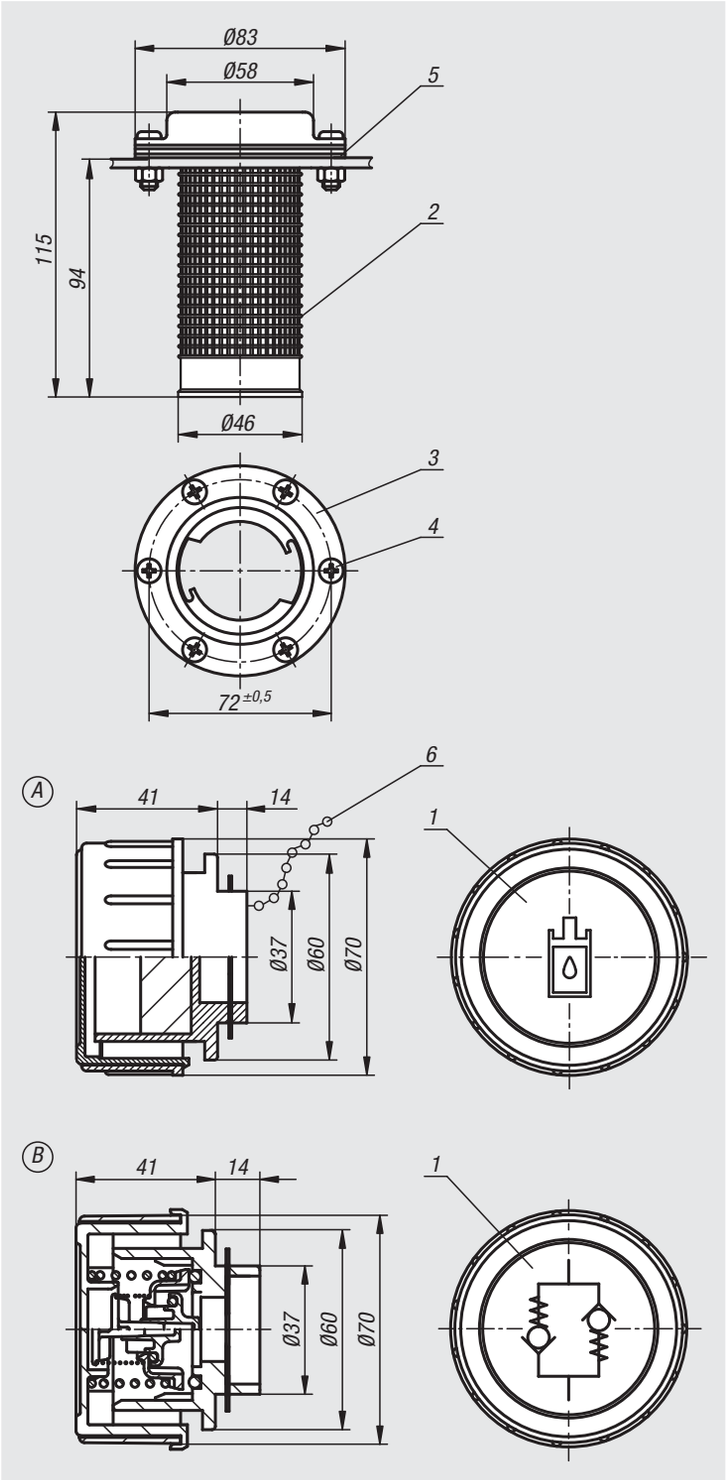

Order No.	Form	Type
28072-170	A	with filter
28072-270	B	vent valve

Notes

29000

Tube connectors
Tube clamps
Tube joints
Tubes
Columns

Technical information
Thermoplastic tube clamping system

The tube clamping system is characterised by the attractive design and a special reducing sleeve concept.

This unique concept and the associated clamping of different diameters and tube forms permit a flexibility never before achieved.

By simply exchanging a sleeve an existing tubular construction can be transformed into one with a different diameter or cross-section.

Benefits:
- Only one clamping element per construction type.
- Tube reduction (from Ø30–12 or 25x25–10x10) with different reducer sleeves for round or square tubes.
- Tube diameter marked on each reducer sleeve.
- Locking tab on the sleeves prevents rotation in the clamping element.

Note:
The clamping elements are supplied as standard with a DIN 7984 screw and a DIN 985 self-locking nut. Plastic clamp levers for locking available on request.

Closed system (one-piece, slitted)

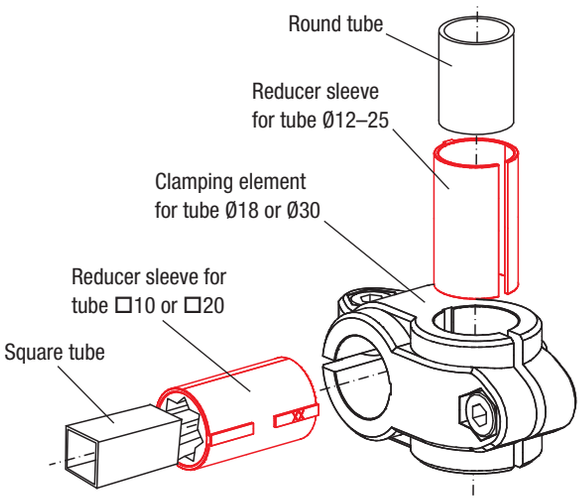

Half shell elements (two-piece)

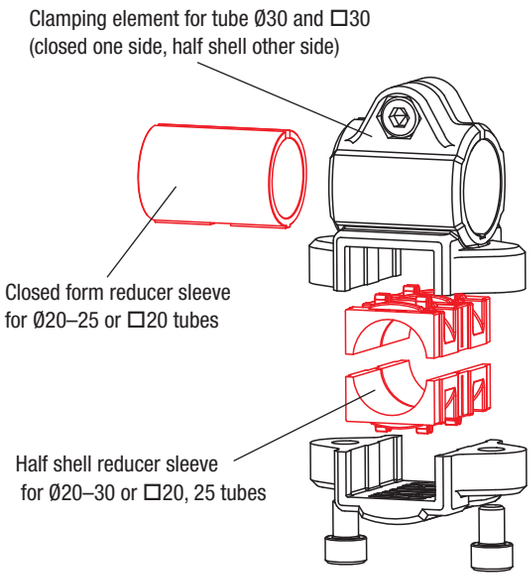

Application using tube clamps

Tube clamps

cross, plastic

Material:
Thermoplastic.
DIN 7984 screws and DIN 985 nuts steel.

Version:
Black.
Screws and nuts galvanized.

Sample order:
nlm 29000-1818

Note:
The standard size for round tubes is Ø18 mm or Ø30 mm. Use reducer sleeves 29042 if smaller tubes are to be clamped or a conversion from round to square tubes is required.

On request:
Plastic levers for locking.

Accessories:
- Reducer sleeves 29042
- Round and square tubes 29050

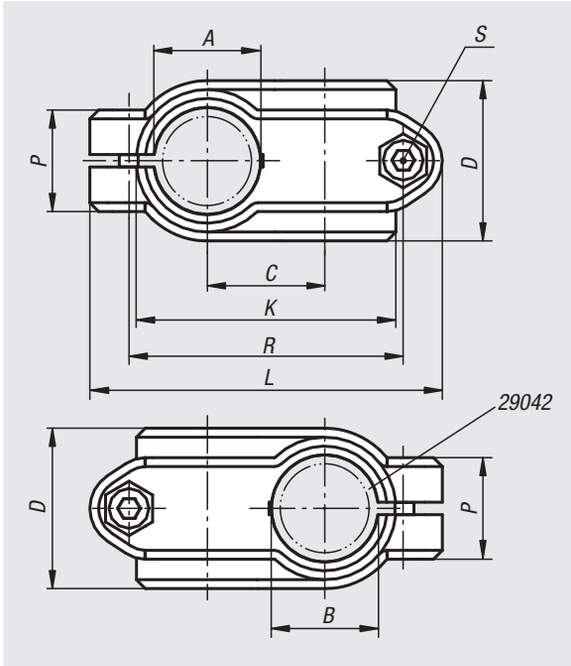

Order No.	A	B	C	D	K	L	P	R	S
29000-1818	18	18	20	30	48	63	21	48	M6x18
29000-3030	30	30	33	45	72	99	28,5	77	M8x25

29000

Tube clamps

cross, aluminium

Material:
Cast aluminium.
Screws and nuts steel.

Version:
Vibratory ground.
Screws and nuts galvanized.

Sample order:
nlm 29000-523030

On request:
Levers for locking and other diameters.

Accessories:
- Round and square tubes 29050

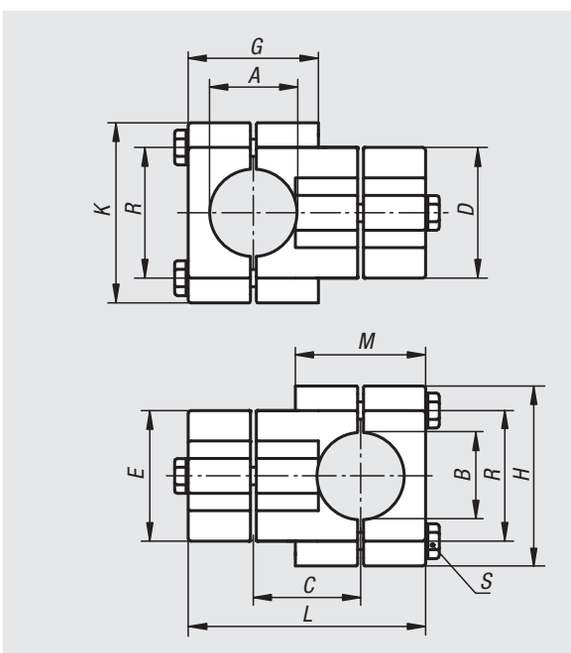

Order No.	A	B	C	D	E	G	H	K	L	M	R	S
29000-523030	30,2	30,2	38	45	45	44	62	62	83	44	46	M8x45
29000-524040	40,2	40,2	50	60	60	60	75	75	110	60	57	M8x60

Tube clamps

cross, aluminium

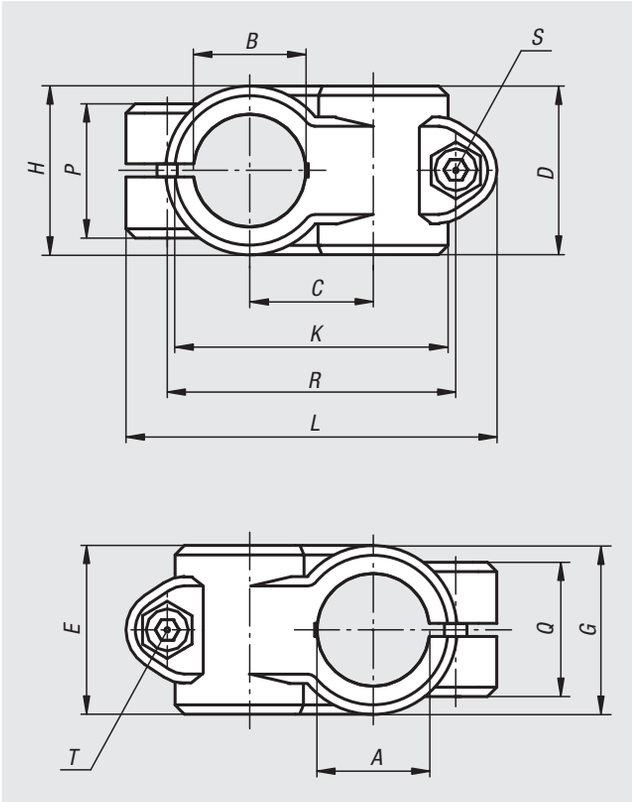

Material:
Cast aluminium.
DIN 7984 screws and DIN 985 nuts steel.

Version:
Vibratory ground.
Screws and nuts galvanized.

Sample order:
nlm 29000-51818

On request:
Levers for locking.

Accessories:
- Round and square tubes 29050

Order No.	A	B	C	D	E	G	H	K	L	P	Q	R	S	T
29000-51212	12,1	12,1	20	25,5	25,5	-	-	43,5	66	23	23	51	M6x20	M6x20
29000-51414	14,1	14,1	20	25,5	25,5	-	-	43,5	66	22	22	51	M6x20	M6x18
29000-51515	15,1	15,1	20	25,5	25,5	-	-	43,5	66	22	22	51	M6x20	M6x18
29000-51616	16,1	16,1	20	25,5	25,5	-	-	43,5	66	22	22	51	M6x20	M6x18
29000-51818	18,1	18,1	20	25,5	25,5	-	-	43,5	66	23	23	51	M6x20	M6x18
29000-52014	20,1	14,1	27	40	33	40	26	60	84	21	33	65	M8x25	M6x18
29000-52020	20,1	20,1	33	40	40	-	-	73	99	33	33	78	M8x25	M8x25
29000-52514	25,1	14,1	27	40	33	40	26	60	84	21	33	65	M8x25	M6x18
29000-52525	25,1	25,1	33	40	40	-	-	73	99	33	33	78	M8x25	M8x25
29000-53014	30,1	14,1	27	40	33	40	26	60	84	21	33	65	M8x25	M6x18
29000-53030	30,1	30,1	33	40	40	-	-	73	99	33	33	78	M8x25	M8x25
29000-54020	40,2	20,2	36	50	40	55	34,5	87	109	33	40	87	M10x30	M8x25
29000-54030	40,2	30,1	45	65	65	65	49	98	137	44	44	109	M10x30	M10x30
29000-54040	40,17	40,17	45	60	60	-	-	100	137	40	40	110	M10x30	M10x30
29000-55030	50,2	30,1	45	65	65	65	49	98	137	44	44	109	M10x35	M10x35
29000-55050	50,2	50,2	54	70	70	-	-	118	154	45	45	128	M10x35	M10x35

Tube clamps

cross, stainless steel

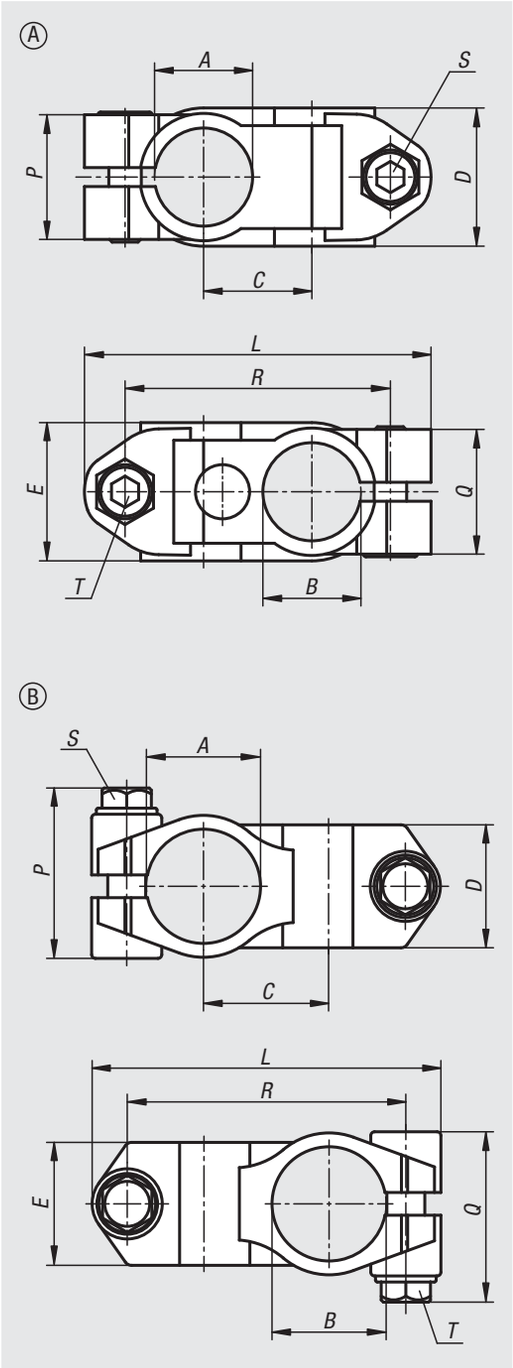

Material:
Investment cast 1.4308 stainless steel.
Socket head screw ISO 4762 and hexagon nut ISO 4032, stainless steel.
From ø30 mm hexagon head bolt ISO 4017, stainless steel.

Version:
Electropolished.

Sample order:
nlm 29000-11212

Note:
The tube clamps with diameters 30 and 40 mm have a silicone coating on the female thread that protects the thread of the hex head screw from contamination and damage.

On request:
Levers for locking.

Accessories:
- Round and square tubes 29050

Order No.	Form	A	B	C	D	E	L	P	Q	R	S	T
29000-11212	A	12,1	12,1	20	25,5	25,5	64	23	23	49	M6x18	M6x18
29000-11414	A	14,1	14,1	20	25,5	25,5	64	23	23	49	M6x18	M6x18
29000-11616	A	16,1	16,1	20	25,5	25,5	64	23	23	49	M6x18	M6x18
29000-11818	A	18,1	18,1	20	25,5	25,5	64	23	23	49	M6x18	M6x18
29000-12020	A	20,1	20,1	21	25,5	25,5	64	23	23	49	M6x18	M6x18
29000-13030	B	30,1	30,1	33	32,4	32,4	92	45.5	45.5	73,5	M8x30	M8x30
29000-14040	B	40,17	40,17	42	40,4	40,4	118	52	52	95,5	M10x35	M10x35

Tube clamps

cross, plastic

Material:
Thermoplastic.
DIN 7984 screws and DIN 985 nuts steel.

Version:
Black.
Screws and nuts galvanized.

Sample order:
nlm 29002-3030

Note:
These cross clamps are for 30 mm square tubes. Use reducer sleeves 29040 if smaller tubes are to be clamped or a conversion from square to round tubes is required.

On request:
Plastic levers for locking.

Accessories:
- Reducer sleeves 29040
- Round and square tubes 29050

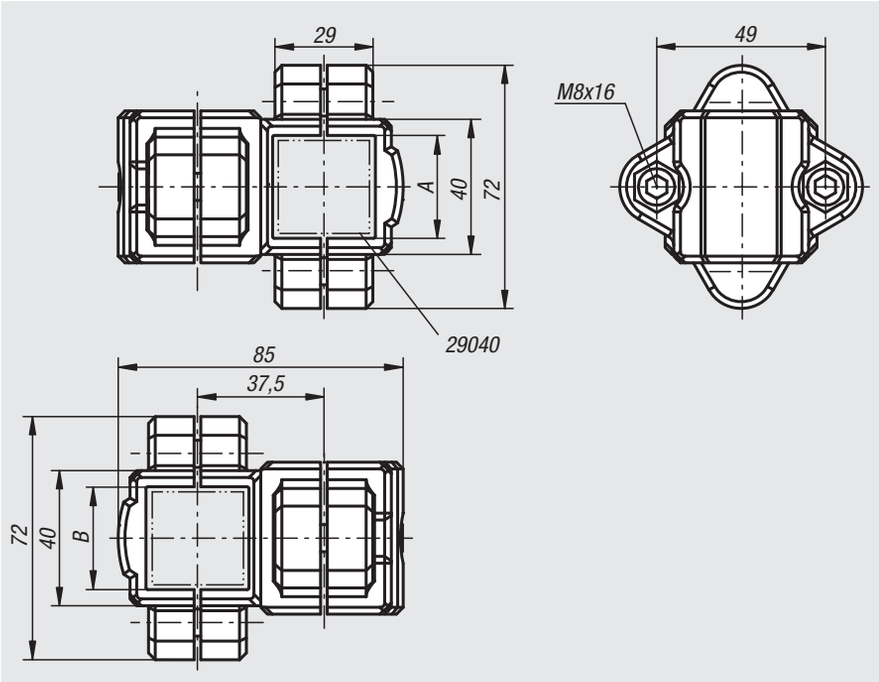

Order No.	A	B
29002-3030	30	30

29002

Tube clamps

cross, aluminium

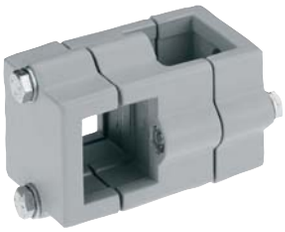

Material:
Cast aluminium.
Screws and nuts steel.

Version:
Vibratory ground.
Screws and nuts galvanized.

Sample order:
nlm 29002-523030

On request:
Levers for locking and other sizes for square tube.

Accessories:
- Round and square tubes 29050

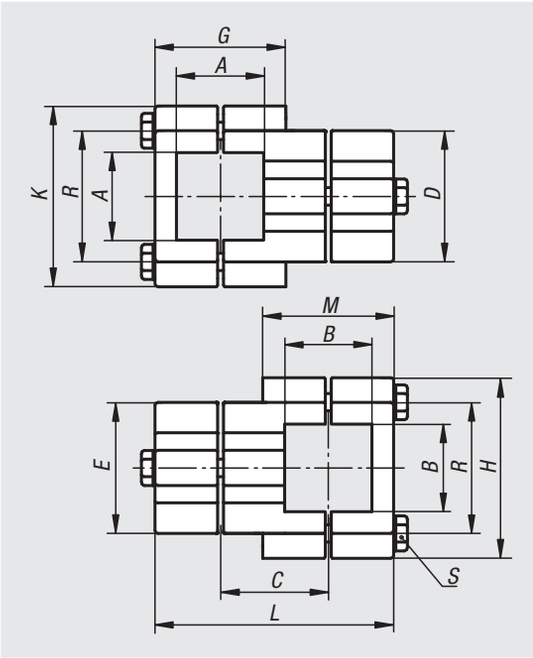

Order No.	A	B	C	D	E	G	H	K	L	M	R	S
29002-523030	30,2	30,2	38	45	45	44	62	62	83	44	46	M8x45
29002-524040	40,3	40,3	50	60	60	60	75	75	110	60	57	M8x60

Tube clamps

cross, plastic

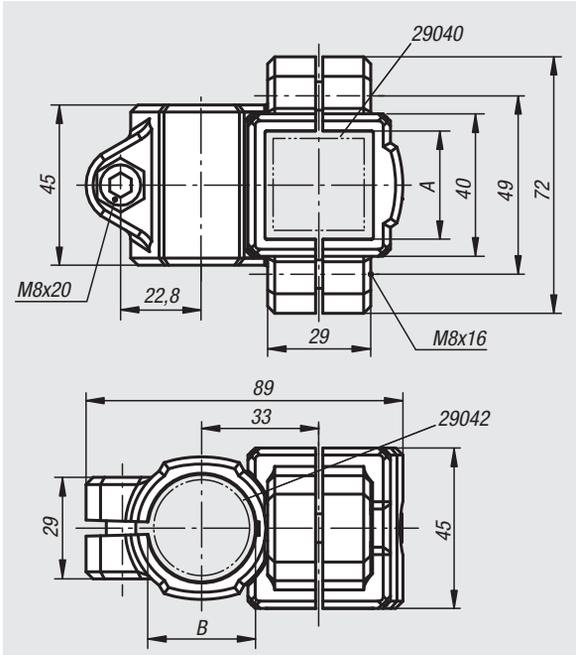

Material:
Thermoplastic.
DIN 7984 screws and DIN 985 nuts steel.

Version:
Black.
Screws and nuts galvanized.

Sample order:
nlm 29004-3030

Note:
These cross clamps are for 30 mm square and round tubes. Use reducer sleeves 209040 or 29042 if smaller tubes are to be clamped or a conversion from round to square tubes is required.

On request:
Plastic levers for locking.

Accessories:
- Reducer sleeves 29040 and 29042
- Round and square tubes 29050

Order No.	A	B
29004-3030	30	30

29004

Tube clamps

cross, aluminium

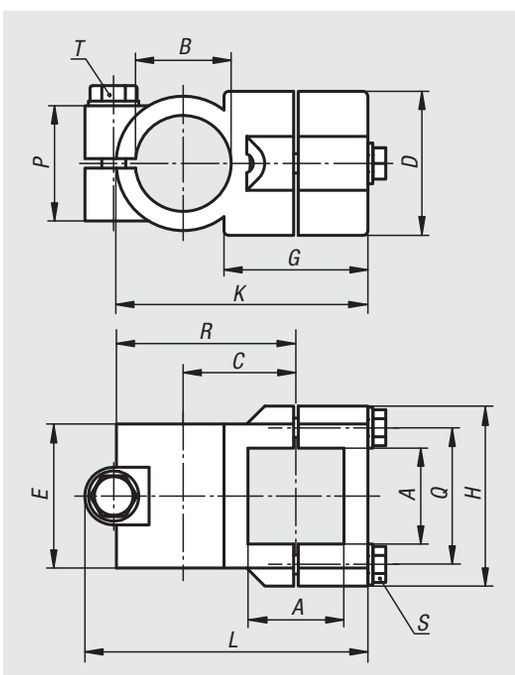

Material:
Cast aluminium.
Screws and nuts steel.

Version:
Vibratory ground.
Screws and nuts galvanized.

Sample order:
nlm 29004-53030

On request:
Clamping levers for fastening and other diameters.

Accessories:
- Round and square tubes 29050

Order No.	A	B	C	D	E	G	H	K	L	P	Q	R	S	T
29004-53030	30,2	30,1	33	45	45	40	62	74,5	85	33	46	55	M8x35	M8x35
29004-54040	40,3	40,2	47	60	60	60	75	105	117	48	57	75	M8x45	M10x50

Tube clamps

T-angle, plastic

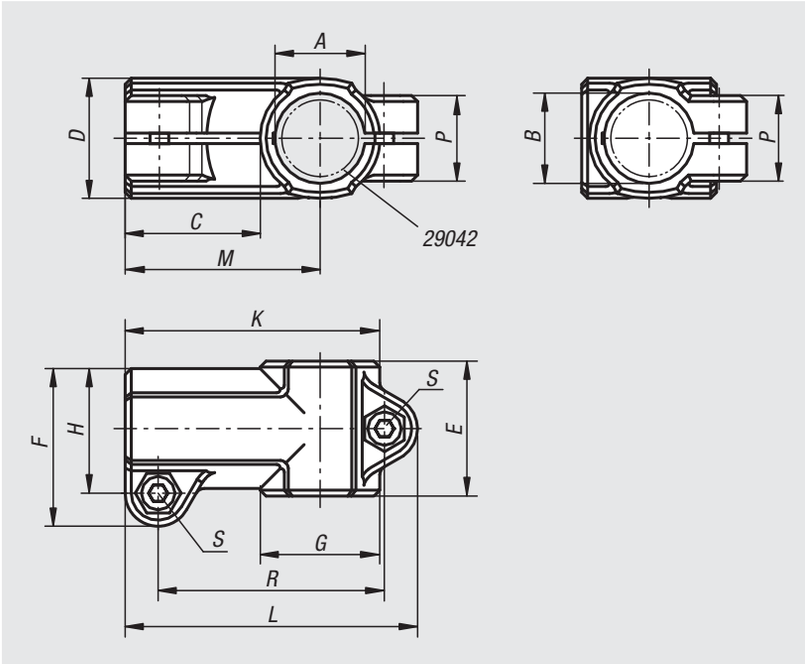

Material:
Thermoplastic.
DIN 7984 screws and DIN 985 nuts steel.

Version:
Black.
Screws and nuts galvanized.

Sample order:
nlm 29006-1818

Note:
The standard size for round tubes is Ø18 mm or Ø30 mm. Use reducer sleeves 29042 if smaller tubes are to be clamped or a conversion from round to square tubes is required.

On request:
Plastic levers for locking.

Accessories:
- Reducer sleeves 29042
- Round and square tubes 29050

Order No.	A	B	C	D	E	F	G	H	K	L	M	P	R	S
29006-1818	18	18	30,5	25	30	34	25	26,5	55,5	64,5	43	21	49,5	M6x18
29006-3030	30	30	45	40	45	52,5	40	41,5	85	97,5	65	28,5	75,5	M8x25

Tube clamps

T-angle, aluminium

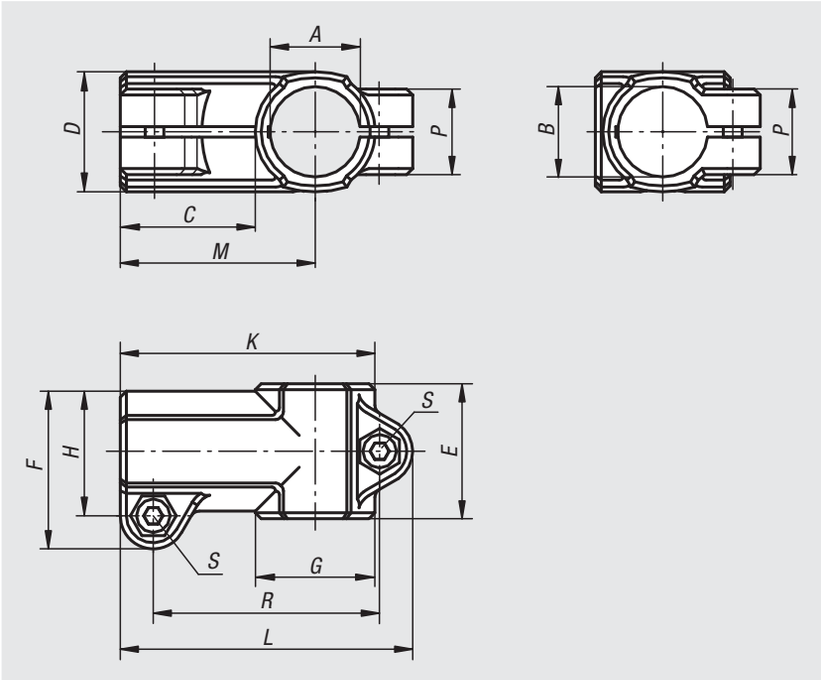

Material:
Cast aluminium.
DIN 7984 screws and DIN 985 nuts steel.

Version:
Vibratory ground.
Screws and nuts galvanized.

Sample order:
nlm 29006-51818

On request:
Levers for locking and other diameters.

Accessories:
- Round and square tubes 29050

Order No.	A	B	C	D	E	F	G	H	K	L	M	P	R	S
29006-51212	12,1	12,1	30	26	32	37,5	26	30	56	67,5	43	21	52	M6x20
29006-51414	14,1	14,1	30	26	32	37,5	26	30	56	67,5	43	21	52	M6x20
29006-51515	15,1	15,1	30	26	32	37,5	26	30	56	67,5	43	21	52	M6x20
29006-51616	16,1	16,1	30	26	32	37,5	26	30	56	67,5	43	21	52	M6x20
29006-51818	18,1	18,1	30	26	32	37,5	26	30	56	67,5	43	21	52	M6x20
29006-52020	20,1	20,1	40	40	45	53	40	42,5	80	93	60	33	72,5	M8x25
29006-52525	25,1	25,1	40	40	45	53	40	42,5	80	93	60	33	72,5	M8x25
29006-53030	30,1	30,1	40	40	45	53	40	42,5	80	93	60	33	72,5	M8x25
29006-54040	40,2	40,2	60	56	60	74	56	60	115	133	88	40	107	M10x30
29006-55050	50,22	50,22	63	66	70	85	66	71	131	150	99	45	122	M10x35

Tube clamps

T-angle, stainless steel

Material:
Investment cast 1.4308 stainless steel.
Socket head screw ISO 4762 and hexagon nut ISO 4032, stainless steel.
From ø30 mm hexagon head bolt ISO 4017, stainless steel.

Version:
Electropolished.

Sample order:
nlm 29006-11212

Note:
The tube clamps with diameters 30 and 40 mm have a silicone coating on the female thread that protects the thread of the hex head screw from contamination and damage.

On request:
Levers for locking.

Accessories:
- Round and square tubes 29050

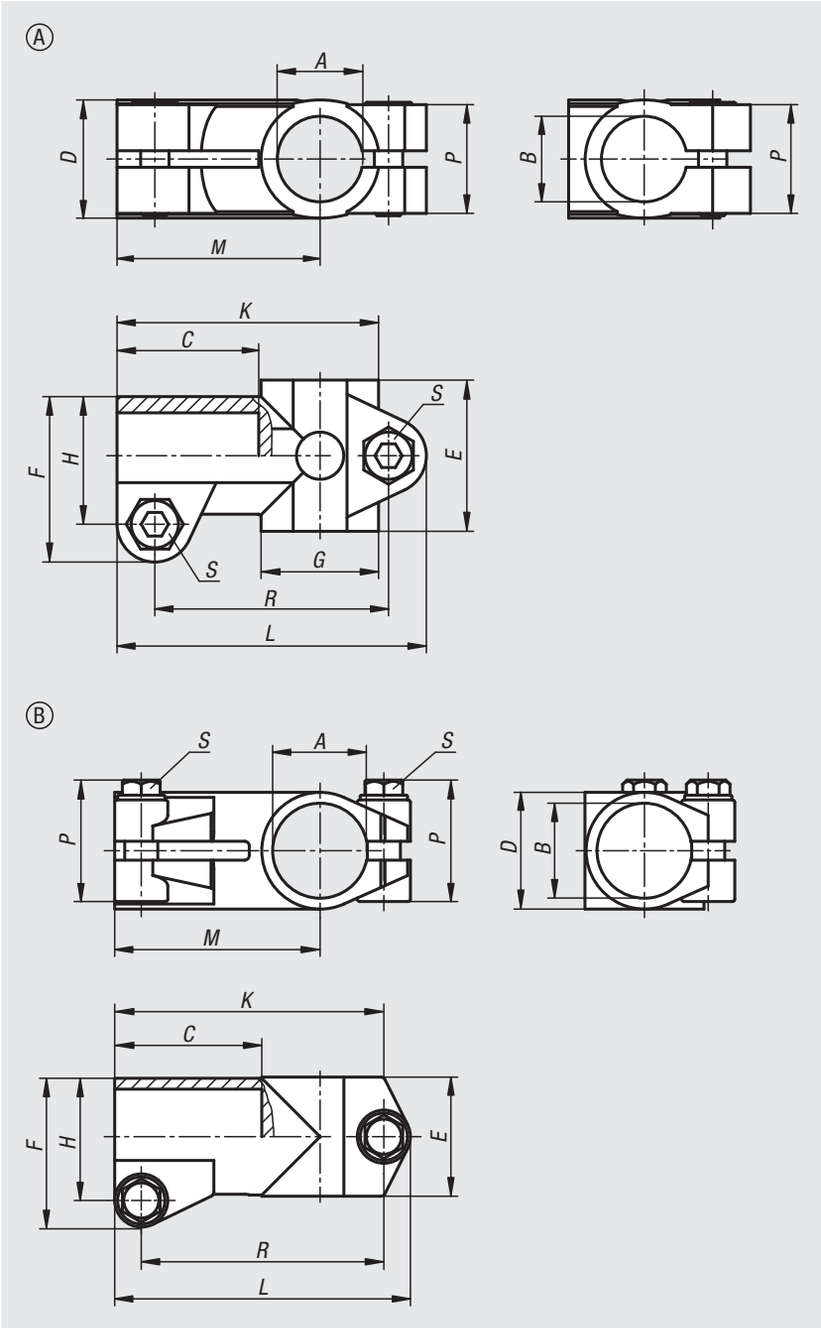

Order No.	Form	A	B	C	D	E	F	G	H	K	L	M	P	R	S
29006-11212	A	12,1	12,1	30,5	25	32	35	25	27	55,5	65,5	43	23	49,5	M6x18
29006-11414	A	14,1	14,1	30,5	25	32	35	25	27	55,5	65,5	43	23	49,5	M6x18
29006-11616	A	16,1	16,1	30,5	25	32	35	25	27	55,5	65,5	43	23	49,5	M6x18
29006-11818	A	18,1	18,1	30,5	25	32	35	25	27	55,5	65,5	43	23	49,5	M6x18
29006-12020	A	20,1	20,1	30,5	25	32	35	25	27	55,5	65,5	43	23	49,5	M6x18
29006-13030	B	30,1	30,1	40	38,4	38	48	-	39	78	87	58	45.5	69	M8x30
29006-14040	B	40,17	40,17	60	50,4	50	63	-	51,8	112	124,9	87	52	102,5	M10x35

Tube clamps

T-angle, plastic

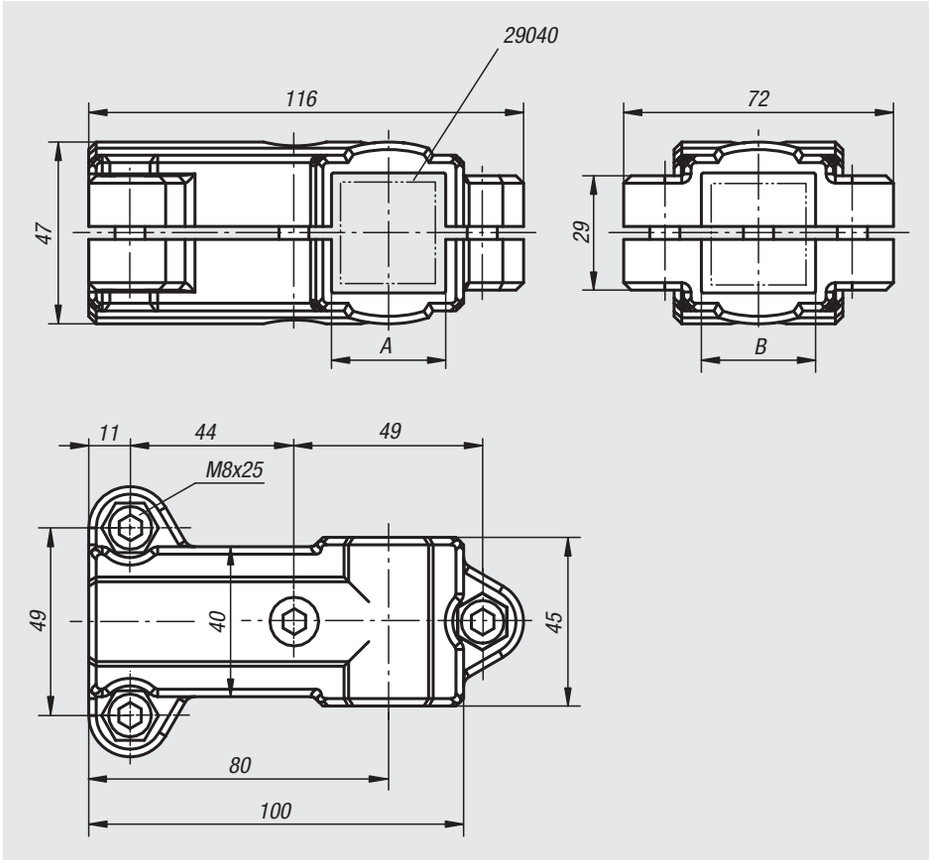

Material:
Thermoplastic.
DIN 7984 screws and DIN 985 nuts steel.

Version:
Black.
Screws and nuts galvanized.

Sample order:
nlm 29008-3030

Note:
These T-clamps are for 30 mm square tubes. Use reducer sleeves 29040 if smaller tubes are to be clamped or a conversion from square to round tubes is required.

On request:
Plastic levers for locking.

Accessories:
- Reducer sleeves 29040
- Round and square tubes 29050

Order No.	A	B
29008-3030	30	30

Tube clamps

T-angle, aluminium

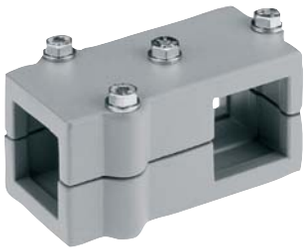

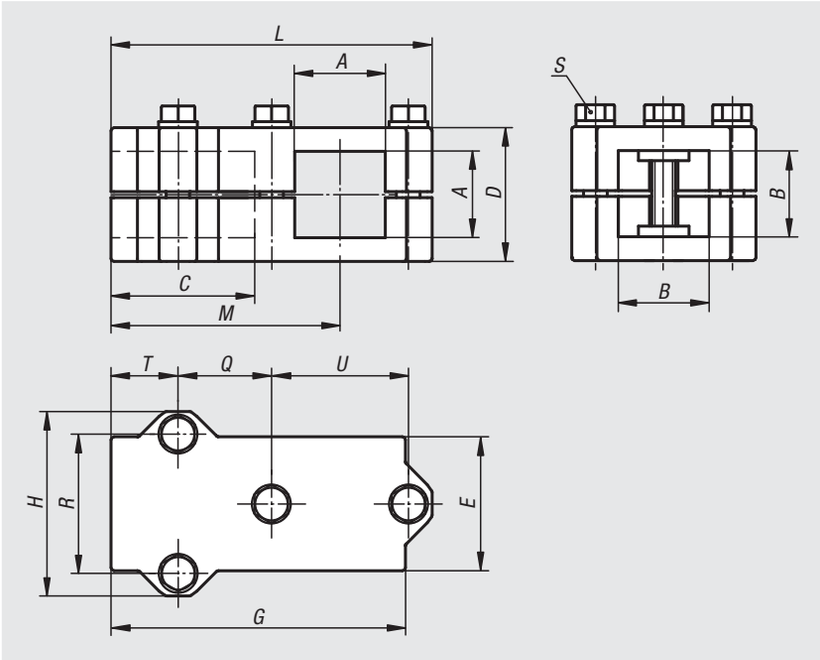

Material:
Cast aluminium.
Screws and nuts steel.

Version:
Vibratory ground.
Screws and nuts galvanized.

Sample order:
nlm 29008-523030

On request:
Levers for locking and other sizes for square tube.

Accessories:
- Round and square tubes 29050

Order No.	A	B	C	D	E	G	H	L	M	Q	R	S	T	U
29008-523030	30,3	30,3	46	45	45	100	62	108	77	31,5	46	M8x45	23	46
29008-524040	40,4	40,4	60	60	60	129	75	136	99	40	57	M8x60	30	57

29008

Tube clamps

right-angle, aluminium

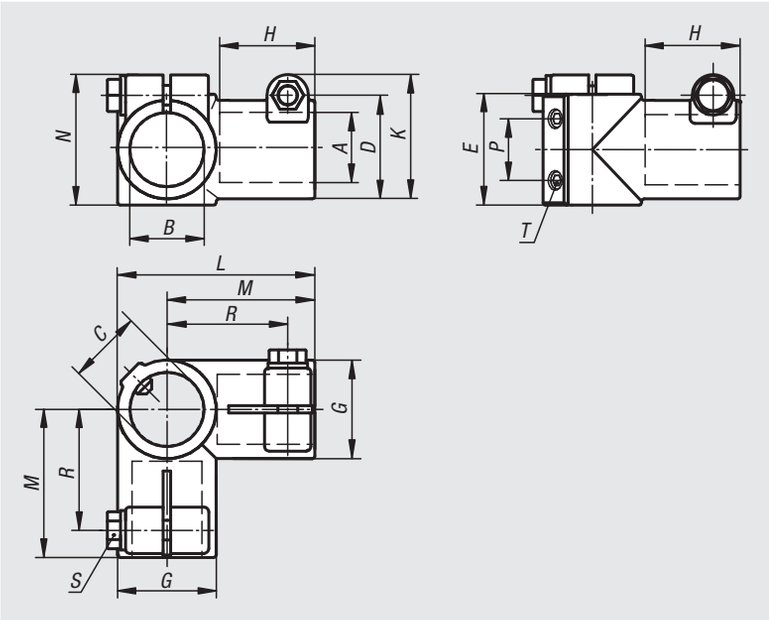

Material:
Cast aluminium.
Screws and nuts steel.

Version:
Vibratory ground.
Screws and nuts galvanized.

Sample order:
nlm 29008-530

On request:
Levers for locking and other diameters.

Accessories:
- Round and square tubes 29050

Order No.	A	B	C	D	E	G	H	K	L	M	N	P	R	S	T
29008-530	30,1	30,1	30	40	45	40	35	51	80	60	53	25	49	M8x35	M8x15
29008-540	40,2	40,2	40	56	60	56	58	71	116	88	73	35	75	M10x30	M8x10
29008-550	50,2	50,2	50,2	66	70	66	70	78	136	108	80	40	90	M10x35	M10x12

Tube clamps

base, plastic

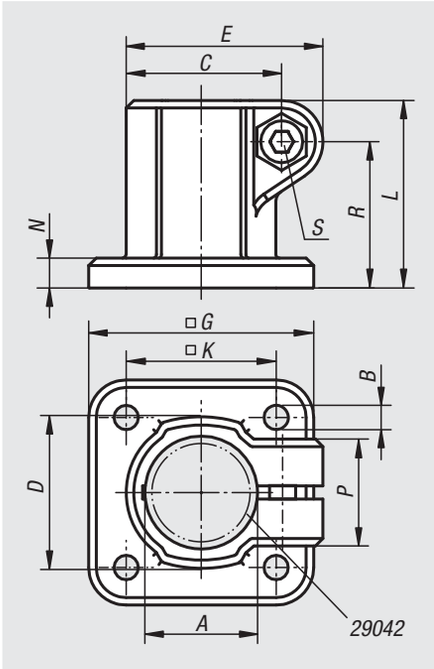

Material:
Thermoplastic.
DIN 7984 screws and DIN 985 nuts steel.

Version:
Black.
Screws and nuts galvanized.

Sample order:
nlm 29010-18

Note:
The standard size for round tubes is Ø18 mm or Ø30 mm. Use reducer sleeves 29042 if smaller tubes are to be clamped or a conversion from round to square tubes is required.

On request:
Plastic levers for locking.

Accessories:
- Reducer sleeves 29042
- Round and square tubes 29050

Order No.	A	B	C	D	E	G	K	L	N	P	R	S
29010-18	18	5,3	26,5	26	34	45	30	32	5	21	24,5	M6x18
29010-30	30	6,5	41,5	42	52,5	60	40	50	8	28,5	39	M8x25

Tube clamps

base, aluminium

Material:
Cast aluminium.
DIN 7984 screws and DIN 985 nuts steel.

Version:
Vibratory ground.
Screws and nuts galvanized.

Sample order:
nlm 29010-518

On request:
Levers for locking and other diameters.

Accessories:
- Round and square tubes 29050

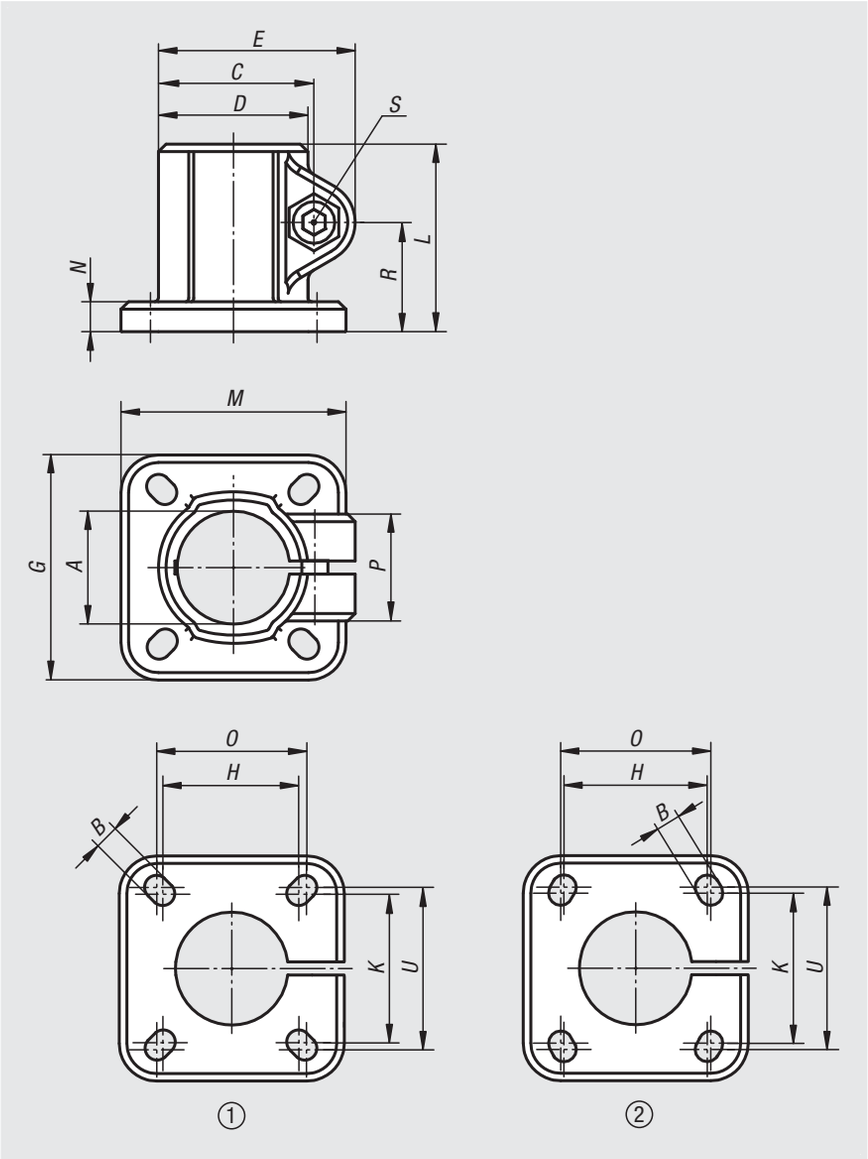

Order No.	hole arrangement	A	B	C	D	E	G	H	K	L	M	N	O	P	R	S	U
29010-512	1	12,1	5,5	29,5	25	37,5	42	28	28	37	42	5	30	23	21	M6x20	30
29010-514	1	14,1	5,5	29,5	25	37,5	42	28	28	37	42	5	30	23	21	M6x20	30
29010-515	1	15,1	5,5	29,5	25	37,5	42	28	28	37	42	5	30	23	21	M6x20	30
29010-516	1	16,1	5,5	29,5	25	37,5	42	28	28	37	42	5	30	23	21	M6x20	30
29010-518	1	18,1	5,5	29,5	25	37,5	42	28	28	37	42	5	30	23	21	M6x20	30
29010-520	2	20,1	6,5	42,5	40	53	60	40	42	50	60	8	42	33	29	M8x25	45
29010-525	2	25,1	6,5	42,5	40	53	60	40	42	50	60	8	42	33	29	M8x25	45
29010-530	2	30,1	6,5	42,5	40	53	60	40	42	50	60	8	42	33	29	M8x25	45
29010-540	1	40,17	8,5	60	56	74	90	60	60	70	90	10	64	40	40	M10x30	64
29010-550	1	50,22	10,5	70	66	85	105	74	74	85	105	14	80	45	49,5	M10x35	80

Tube clamps

base, stainless steel

Material:
Investment cast 1.4308 stainless steel.
Socket head screw ISO 4762 and hexagon nut ISO 4032, stainless steel.
From ø30 mm hexagon head bolt ISO 4017, stainless steel.

Version:
Electropolished.

Sample order:
nlm 29010-112

Note:
The tube clamps with diameters 30 and 40 mm have a silicone coating on the female thread that protects the thread of the hex head screw from contamination and damage.

On request:
Levers for locking.

Accessories:
- Round and square tubes 29050

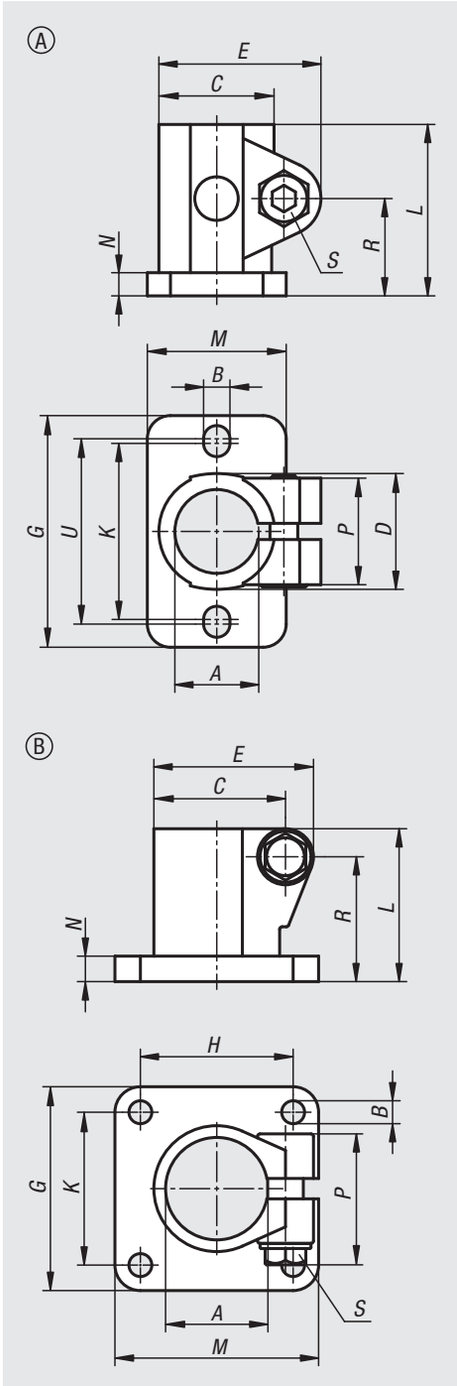

Order No.	Form	A	B	C	D	E	G	H	K	L	M	N	P	R	S	U
29010-112	A	12,1	5,7	27	25	35	50	-	38	37	30	5	23	21	M6x18	40
29010-114	A	14,1	5,7	27	25	35	50	-	38	37	30	5	23	21	M6x18	40
29010-116	A	16,1	5,7	27	25	35	50	-	38	37	30	5	23	21	M6x18	40
29010-118	A	18,1	5,7	27	25	35	50	-	38	37	30	5	23	21	M6x18	40
29010-120	A	20,1	5,7	27	25	35	50	-	38	37	30	5	23	21	M6x18	40
29010-130	B	30,1	7	39	37,4	48	60	40	40	50	60	7	45.5	41	M8x30	-
29010-140	B	40,17	9	51,7	49,4	63	80	60	60	60	80	10	52	48,7	M10x35	-

Tube clamps

base, plastic

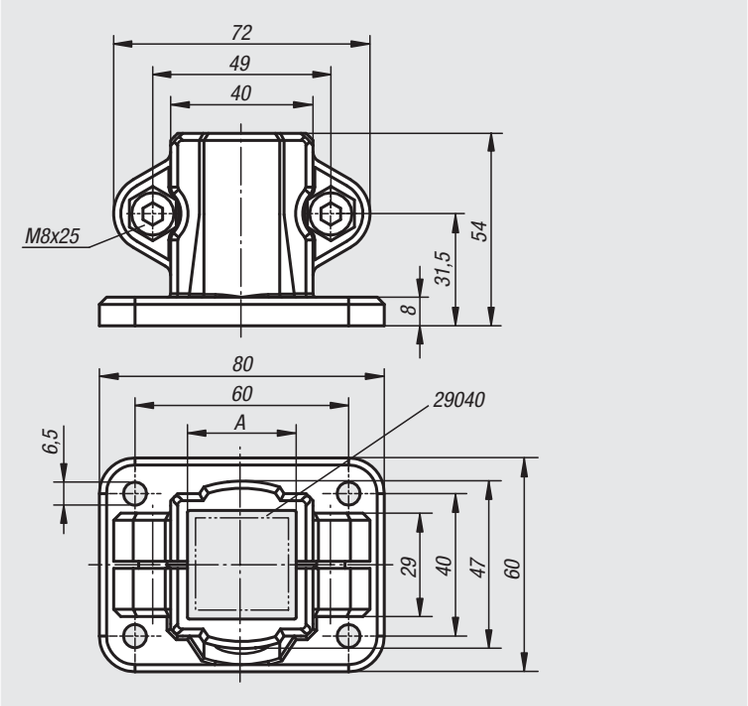

Material:
Thermoplastic.
DIN 7984 screws and DIN 985 nuts steel.

Version:
Black.
Screws and nuts galvanized.

Sample order:
nlm 29012-30

Note:
These base clamps are for 30 mm square tubes. Use reducer sleeves 29040 if smaller tubes are to be clamped or a conversion from square to round tubes is required.

On request:
Plastic levers for locking.

Accessories:
- Reducer sleeves 29040
- Round and square tubes 29050

Order No.	A
29012-30	30

29012

Tube clamps

base, aluminium

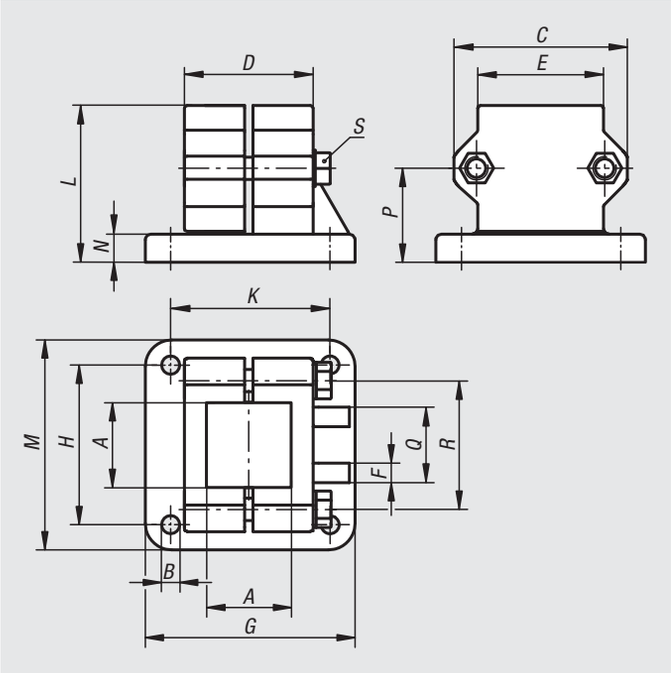

Material:
Cast aluminium.
Screws and nuts steel.

Version:
Vibratory ground.
Screws and nuts galvanized.

Sample order:
nlm 29012-5230

On request:
Levers for locking and other sizes for square tube.

Accessories:
- Round and square tubes 29050

Order No.	A	B	C	D	E	F	G	H	K	L	M	N	P	Q	R	S
29012-5230	30,3	6,5	62	45	45	5	75	57	57	56	75	10	33,5	25	46	M8x45
29012-5240	40,4	8,5	75	60	60	5	100	76	76	71	100	10	43	25	57	M8x60

Tube clamps

flange, plastic

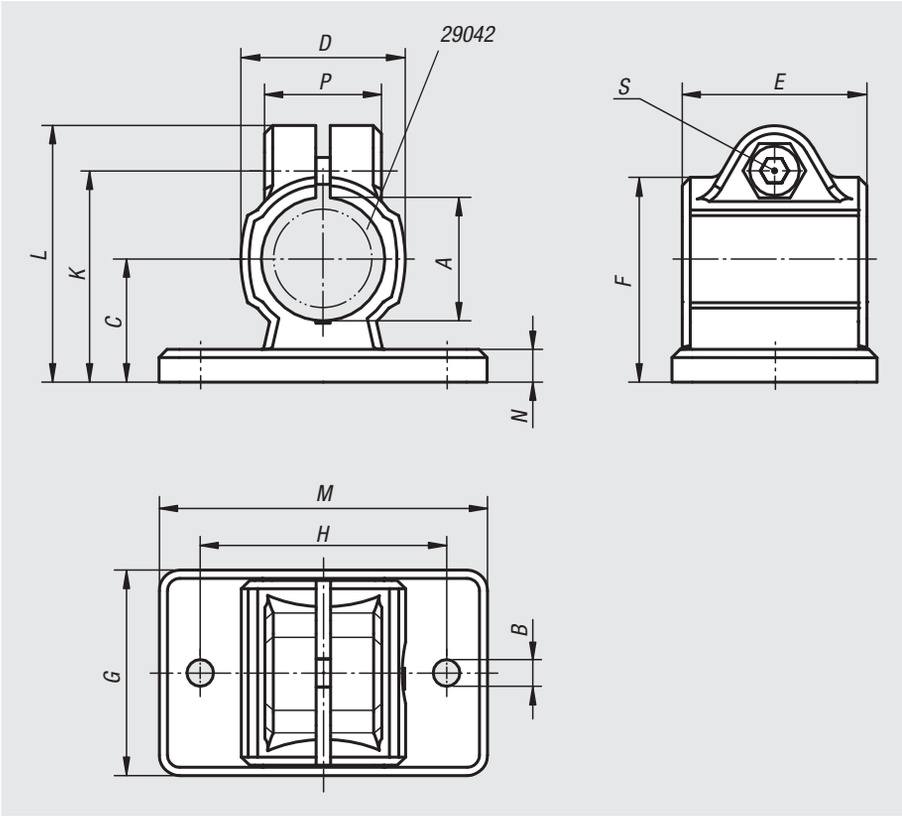

Material:
Thermoplastic.
DIN 7984 screws and DIN 985 nuts steel.

Version:
Black.
Screws and nuts galvanized.

Sample order:
nlm 29014-18

Note:
The standard size for round tubes is Ø18 mm or Ø30 mm. Use reducer sleeves 29042 if smaller tubes are to be clamped or a conversion from round to square tubes is required.

On request:
Plastic levers for locking.

Accessories:
- Reducer sleeves 29042
- Round and square tubes 29050

Order No.	A	B	C	D	E	F	G	H	K	L	M	N	P	S
29014-18	18	5,3	18	25	30	30,5	35	40	32	39,5	50	5	21	M6x18
29014-30	30	6,5	30	40	45	50	50	60	51,5	62,5	80	8	28,5	M8x25

Tube clamps

flange, aluminium

Material:
Cast aluminium.
DIN 7984 screws and DIN 985 nuts steel.

Version:
Vibratory ground.
Screws and nuts galvanized.

Sample order:
nlm 29014-518

Note:
* Elongated hole

On request:
Levers for locking and other diameters.

Accessories:
- Round and square tubes 29050

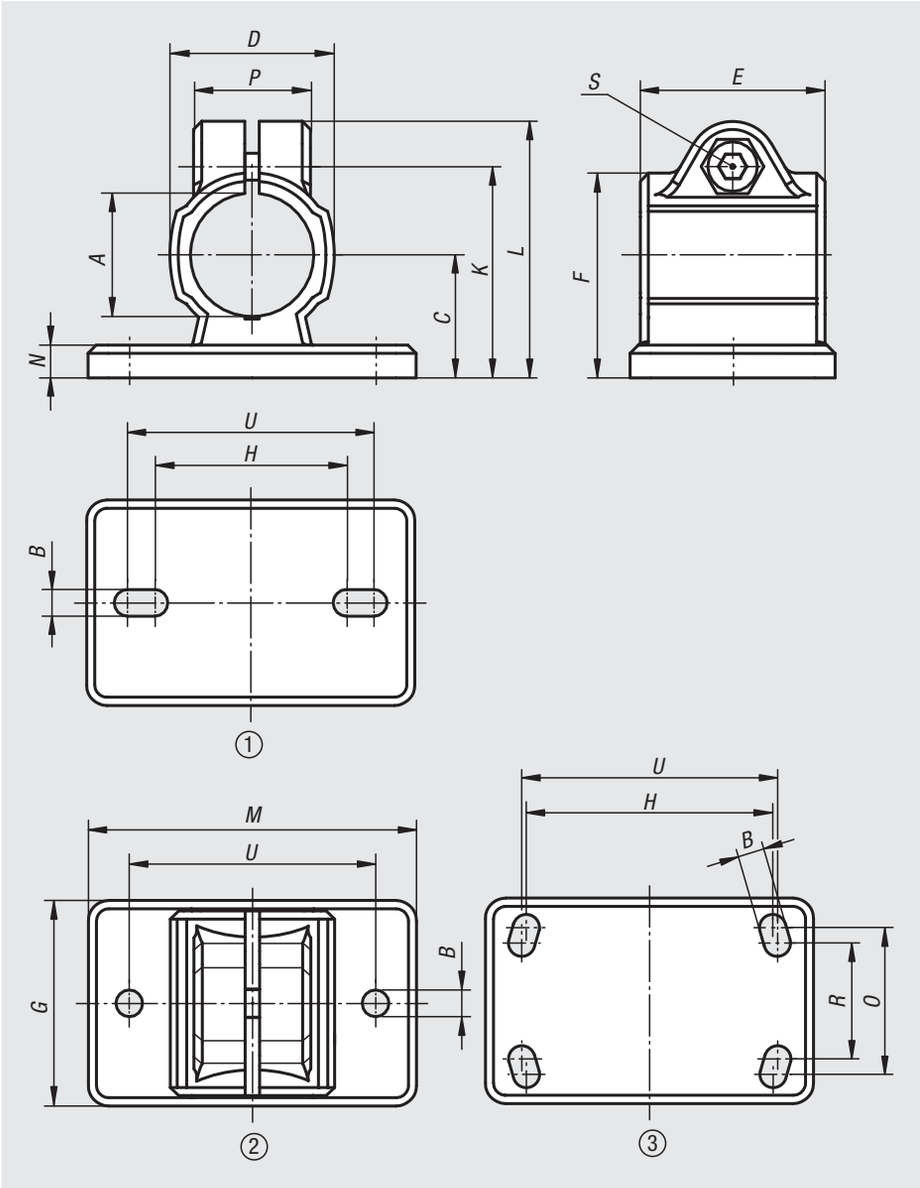

Order No.	hole arrangement	A	B	C	D	E	F	G	H	K	L	M	N	O	P	R	S	U
29014-512	1	12,1	5,5* (2x)	18	26	32	31	35	38	32,5	41	50	5	-	23	-	M6x20	40
29014-514	2	14,1	5,5 (2x)	18	26	32	31	35	-	32,5	41	50	5	-	23	-	M6x20	40
29014-515	2	15,1	5,5 (2x)	18	26	32	31	35	-	32,5	41	50	5	-	23	-	M6x20	40
29014-516	1	16,1	5,5* (2x)	18	26	32	31	35	38	32,5	41	50	5	-	23	-	M6x20	40
29014-518	2	18,1	5,5 (2x)	18	26	32	31	35	-	32,5	41	50	5	-	23	-	M6x20	40
29014-520	1	20,1	6,5* (2x)	30	40	40	50	55	53	53	63	78	7	-	33	-	M8x25	60
29014-525	1	25,1	6,5* (2x)	30	40	40	50	55	53	53	63	78	7	-	33	-	M8x25	60
29014-530	1	30,1	6,5* (2x)	30	40	40	50	55	53	53	63	78	7	-	33	-	M8x25	60
29014-540	3	40,17	8,5* (4x)	42	56	60	70	80	80	74	87	105	10	60	40	52	M10x30	82
29014-550	3	50,17	10,5* (4x)	50	66	65	83	90	98	85	98	128	14	62	45	60	M10x35	100

Tube clamps

flange, aluminium

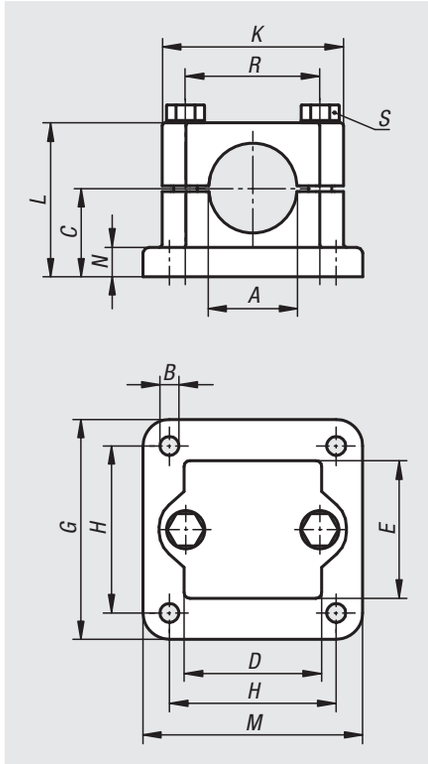

Material:
Cast aluminium.
Screws and nuts steel.

Version:
Vibratory ground.
Screws and nuts galvanized.

Sample order:
nlm 29014-5230

On request:
Levers for locking and other diameters.

Accessories:
- Round and square tubes 29050

Order No.	A	B	C	D	E	G	H	K	L	M	N	R	S
29014-5220	20,2	6,5	30	45	45	75	57	62	52,5	75	10	46	M8x50
29014-5225	25,2	6,5	30	45	45	75	57	62	52,5	75	10	46	M8x50
29014-5230	30,2	6,5	30	45	45	75	57	62	52,5	75	10	46	M8x50
29014-5240	40,2	8,5	40	60	60	100	76	75	70	100	10	57	M8x70

Tube clamps

flange, stainless steel

Material:
Investment cast 1.4308 stainless steel.
Socket head screw ISO 4762 and hexagon nut ISO 4032, stainless steel.
From ø30 mm hexagon head bolt ISO 4017, stainless steel.

Version:
Electropolished.

Sample order:
nlm 29014-112

Note:
The tube clamps with diameters 30 and 40 mm have a silicone coating on the female thread that protects the thread of the hex head screw from contamination and damage.

On request:
Levers for locking.

Accessories:
- Round and square tubes 29050

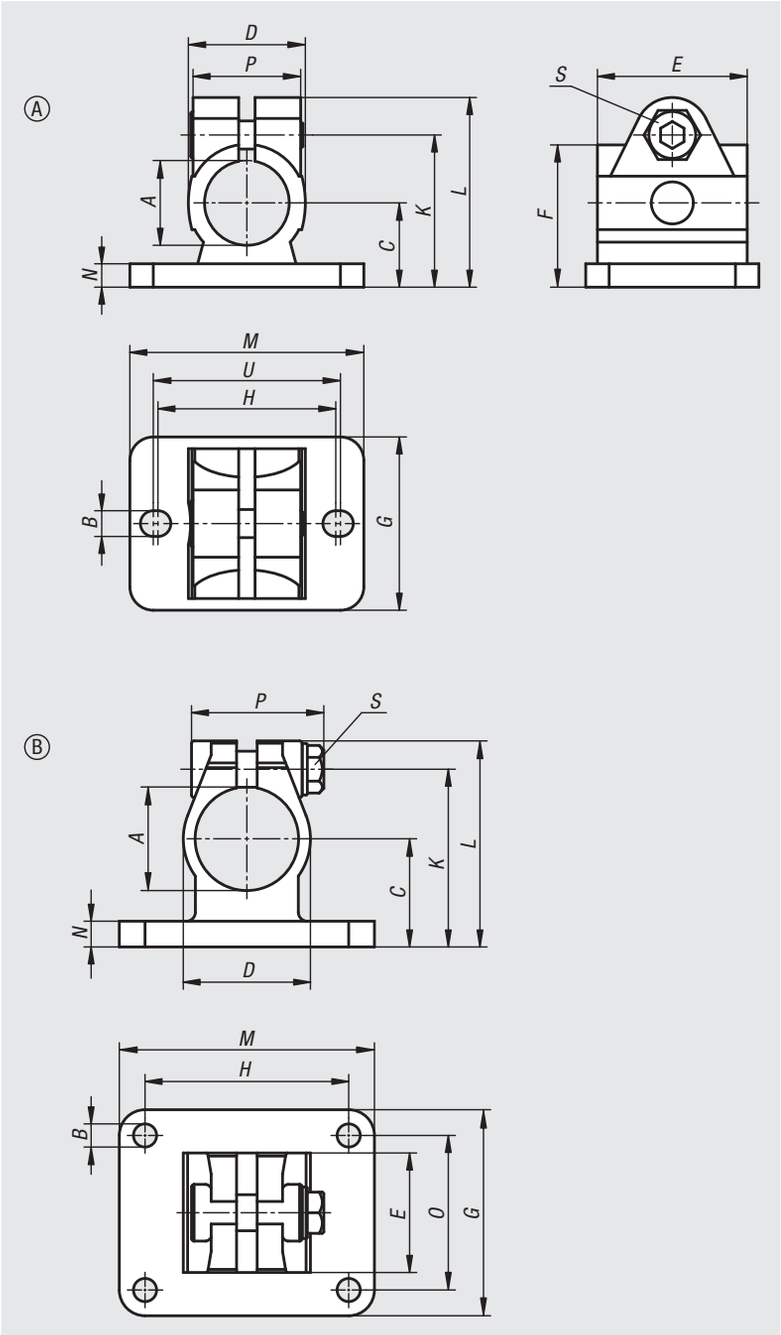

Order No.	Form	A	B	C	D	E	F	G	H	K	L	M	N	O	P	S	U
29014-112	A	12,1	5,5	18	25	32	30,4	37	38	32,5	40.5	50	5	-	23	M6x18	40
29014-114	A	14,1	5,5	18	25	32	30,4	37	38	32,5	40.5	50	5	-	23	M6x18	40
29014-116	A	16,1	5,5	18	25	32	30,4	37	38	32,5	40.5	50	5	-	23	M6x18	40
29014-118	A	18,1	5,5	18	25	32	30,4	37	38	32,5	40.5	50	5	-	23	M6x18	40
29014-120	A	20,1	5,5	18	25	32	30,4	37	38	32,5	40.5	50	5	-	23	M6x18	40
29014-130	B	30,1	7	30	37,4	32,4	-	55	60	50	59,2	78	7	40	45.5	M8x30	-
29014-140	B	40,17	9	42	49,4	46,4	-	80	60	69	80	80	10	60	52	M10x35	-

Tube clamps

flange, plastic

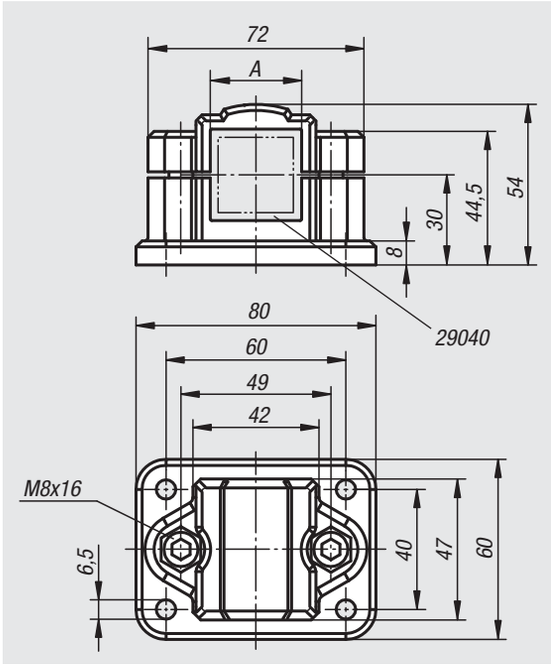

Material:
Thermoplastic.
DIN 7984 screws and DIN 985 nuts steel.

Version:
Black.
Screws and nuts galvanized.

Sample order:
nlm 29016-30

Note:
These flange clamps are for 30 mm square tubes. Use reducer sleeves 29040 if smaller tubes are to be clamped or a conversion from square to round tubes is required.

On request:
Plastic levers for locking.

Accessories:
- Reducer sleeves 29040
- Round and square tubes 29050

Order No.	A
29016-30	30

Tube clamps

flange, aluminium

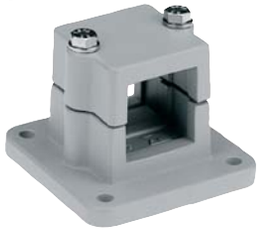

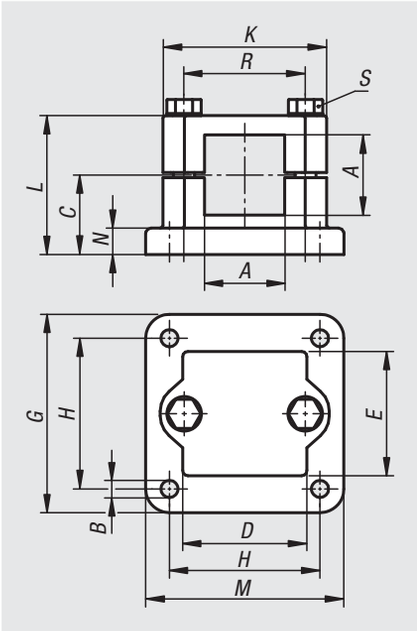

Material:
Cast aluminium.
Screws and nuts steel.

Version:
Vibratory ground.
Screws and nuts galvanized.

Sample order:
nlm 29016-5230

On request:
Levers for locking and other sizes for square tube.

Accessories:
- Round and square tubes 29050

Order No.	A	B	C	D	E	G	H	K	L	M	N	R	S
29016-5225	25,3	6,5	30	45	45	75	57	62	52,5	75	10	46	M8x50
29016-5230	30,3	6,5	30	45	45	75	57	62	52,5	75	10	46	M8x50
29016-5240	40,4	8,5	40	60	60	100	76	75	70	100	10	57	M8x70

Tube clamps

straight, plastic

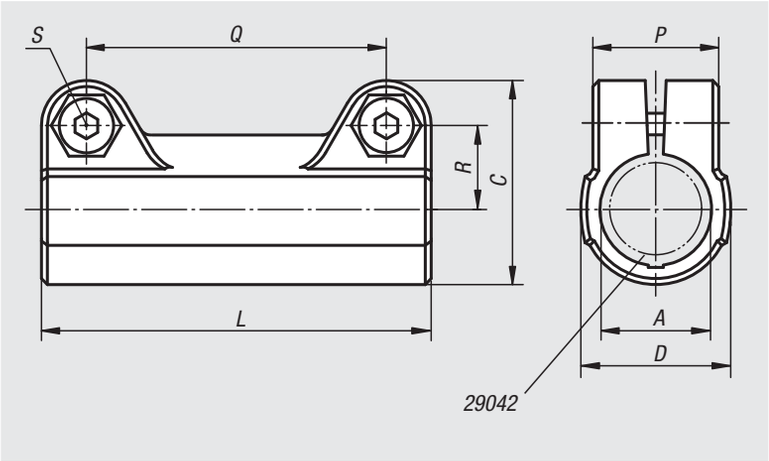

Material:
Thermoplastic.
DIN 7984 screws and DIN 985 nuts steel.

Version:
Black.
Screws and nuts galvanized.

Sample order:
nlm 29022-18

Note:
The standard size for round tubes is Ø18 mm or Ø30 mm. Use reducer sleeves 29042 if smaller tubes are to be clamped or a conversion from round to square tubes is required.

On request:
Plastic levers for locking.

Accessories:
- Reducer sleeves 29042
- Round and square tubes 29050

Order No.	A	C	D	L	P	Q	R	S
29022-18	18	34	25	65	21	50	14	M6x18
29022-30	30	52,5	40	95	28,5	73	22,8	M8x25

Tube clamps

swivel half, sunken teeth, plastic

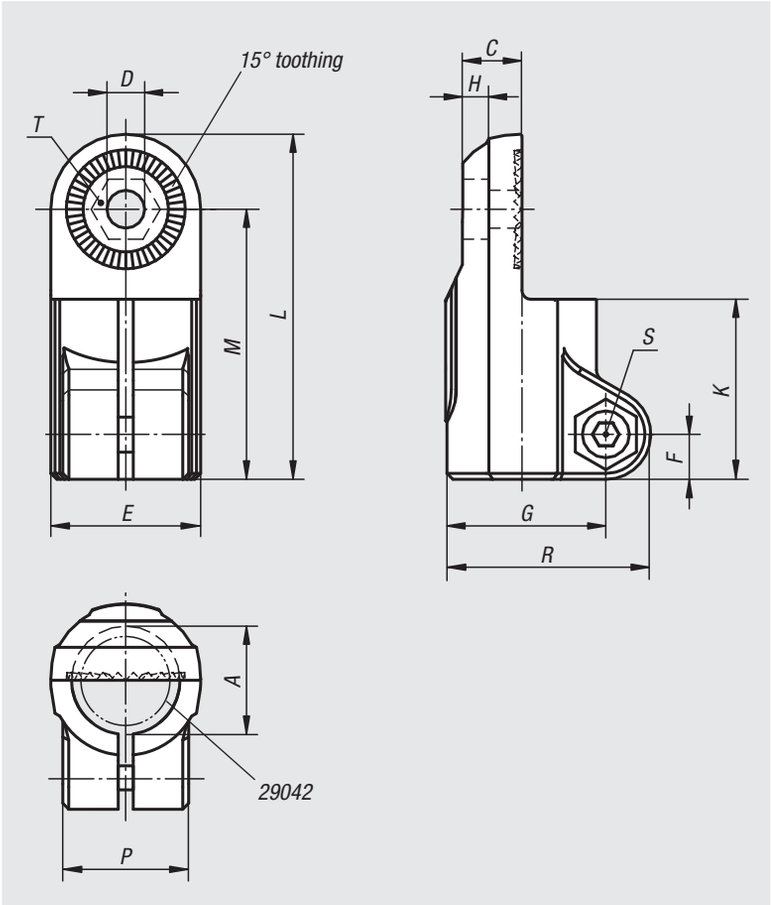

Material:
Thermoplastic.
DIN 7984 screws and DIN 985 nuts steel.

Version:
Black.
Screws and nuts galvanized.

Sample order:
nlm 29024-18

Note:
Swivel half clamps with sunken teeth can be combined with swivel half clamps with raised teeth (29026) to make a complete swivel clamp.
The standard size for round tubes is Ø18 mm or Ø30 mm. Use reducer sleeves 29042 if smaller tubes are to be clamped or a conversion from round to square tubes is required.

On request:
Plastic levers for locking.

Accessories:
- Reducer sleeves 29042
- Round and square tubes 29050

Order No.	A	C	D	E	F	G	H	K	L	M	P	R	S	T
29024-18	18	9,9	6,1	25	7,5	26,5	5,9	30	57,5	45	21	34	M6x18	M6-DIN 985
29024-30	30	16,5	8,1	40	11	41,5	6,5	45	88	68	28,5	52,5	M8x25	M8-DIN 985

Tube clamps

swivel half, raised teeth, plastic

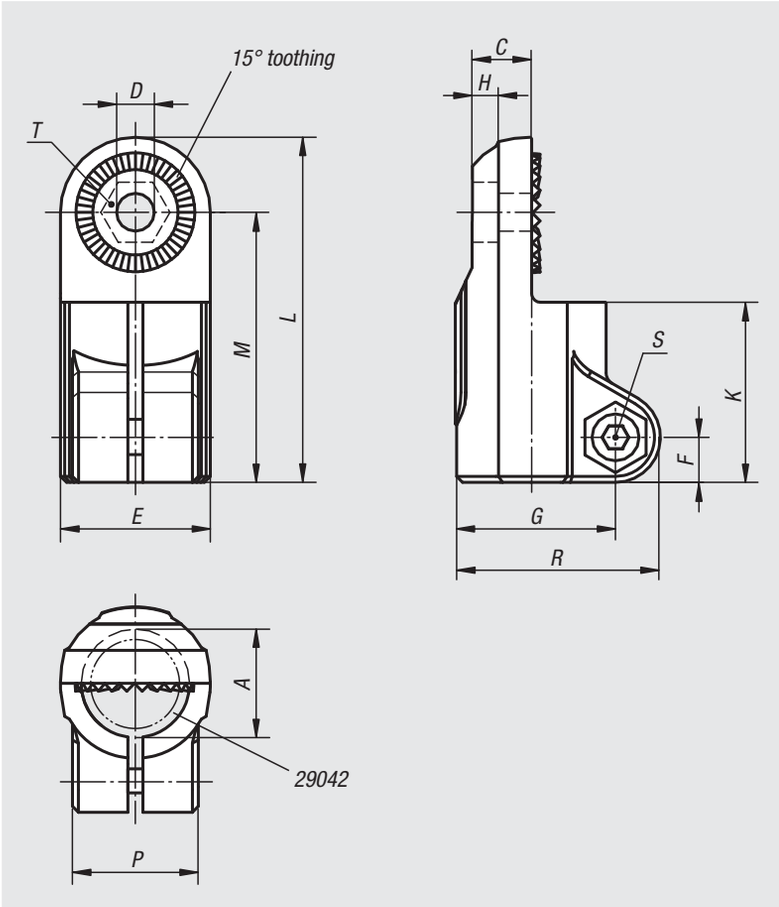

Material:
Thermoplastic.
DIN 7984 screws and DIN 985 nuts steel.

Version:
Black.
Screws and nuts galvanized.

Sample order:
nlm 29026-18

Note:
Swivel half clamps with raised teeth can be combined with swivel half clamps with sunken teeth (29024, 29028 or 29030) to make a complete swivel clamp.
The standard size for round tubes is Ø18 mm or Ø30 mm. Use reducer sleeves 29042 if smaller tubes are to be clamped or a conversion from round to square tubes is required.

On request:
Plastic levers for locking.

Accessories:
- Reducer sleeves 29042
- Round and square tubes 29050

Order No.	A	C	D	E	F	G	H	K	L	M	P	R	S	T
29026-18	18	9,9	6,1	25	7,5	26,5	5,9	30	57,5	45	21	34	M6x18	M6-DIN 985
29026-30	30	16,5	8,1	40	11	41,5	6,5	45	88	68	28,5	52,5	M8x25	M8-DIN 985

Tube clamps

swivel half, sunken teeth, plastic

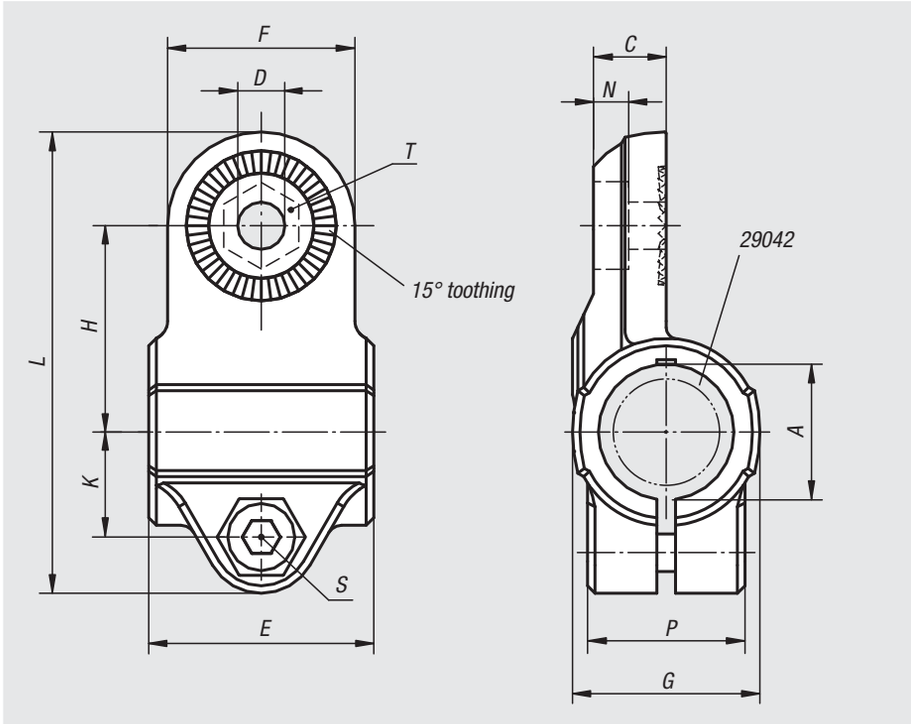

Material:
Thermoplastic.
DIN 7984 screws and DIN 985 nuts steel.

Version:
Black.
Screws and nuts galvanized.

Sample order:
nlm 29028-18

Note:
Swivel half clamps with sunken teeth can be combined with swivel half clamps with raised teeth (29026) to make a complete swivel clamp.
The standard size for round tubes is Ø18 mm or Ø30 mm. Use reducer sleeves 29042 if smaller tubes are to be clamped or a conversion from round to square tubes is required.

On request:
Plastic levers for locking.

Accessories:
- Reducer sleeves 29042
- Round and square tubes 29050

Order No.	A	C	D	E	F	G	H	K	L	N	P	S	T
29028-18	18	9,7	6,1	30	25	25	27,5	14	61,5	5,7	21	M6x18	M6-DIN 985
29028-30	30	16,5	8,1	45	40	40	43	22,5	95,5	6,5	28,5	M8x25	M8-DIN 985

Tube clamps

swivel base, sunken teeth, plastic

Material:
Thermoplastic.
DIN 7984 screws and DIN 985 nuts steel.

Version:
Black.
Screws and nuts galvanized.

Sample order:
nlm 29030-18

Note:
Swivel clamp bases can be combined with swivel half clamps with raised teeth (29026) to make a complete swivel clamp.

On request:
Plastic levers for locking.

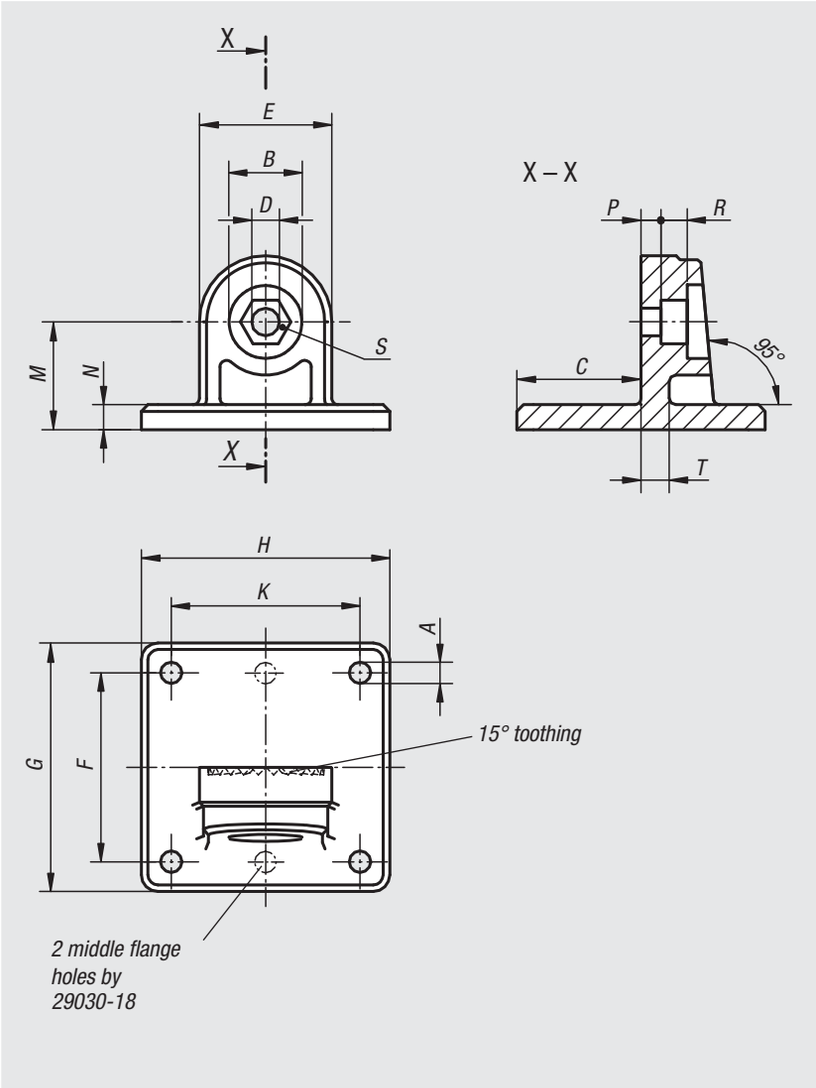

Order No.	A	B	C	D	E	F	G	H	K	M	N	P	R	S	T
29030-18	5,3 (2x)	15	25	6,1	25	40	50	35	-	20	5	4,5	5,5	M6-DIN 985	5
29030-30	6,5 (4x)	22	37,5	8,1	40	60	75	75	60	32,5	7,5	6,6	8,2	M8-DIN 985	7

Tube clamps

swivel, plastic

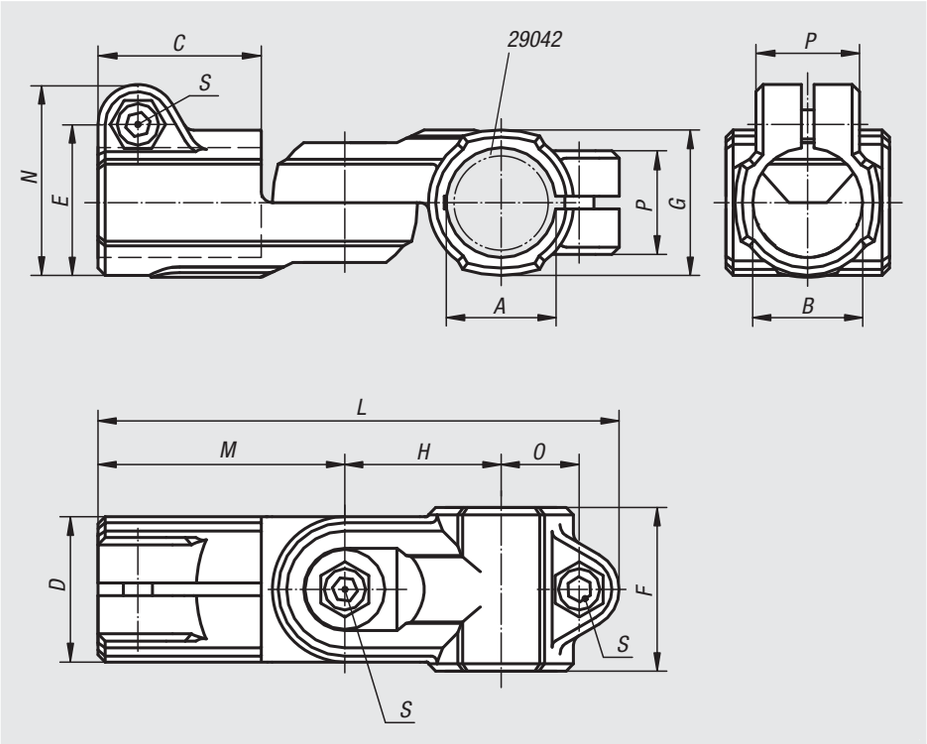

Material:
Thermoplastic.
DIN 7984 screws and DIN 985 nuts steel.

Version:
Black.
Screws and nuts galvanized.

Sample order:
nlm 29032-18

Note:
Tube swivel clamps can be seamlessly rotated through 180°.
The standard size for round tubes is Ø18 mm or Ø30 mm. Use reducer sleeves 29042 if smaller tubes are to be clamped or a conversion from round to square tubes is required.

On request:
Plastic levers for locking.

Accessories:
- Reducer sleeves 29042
- Round and square tubes 29050

Order No.	A	B	C	D	E	F	G	H	L	M	N	O	P	S
29032-18	18	18	30	25	26,5	30	25	27,5	94	45	34	14	21	M6x18
29032-30	30	30	45	40	41,5	45	40	43	143,5	68	52,5	22,5	28,5	M8x25

Tube clamps

swivel, aluminium

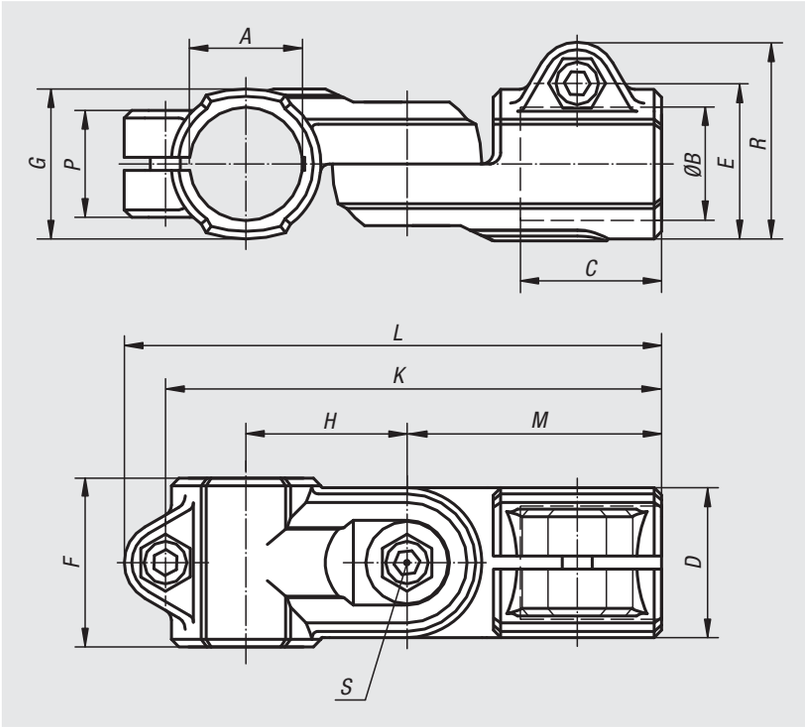

Material:
Cast aluminium.
DIN 7984 screws and DIN 985 nuts steel.

Version:
Vibratory ground.
Screws and nuts galvanized.

Sample order:
nlm 29032-518

Note:
Tube swivel clamps can be seamlessly rotated through 180°.

On request:
Levers for locking and other diameters.

Accessories:
- Round and square tubes 29050

Order No.	A	B	C	D	E	F	G	H	K	L	M	P	R	S
29032-512	12,1	12,1	25	26	29,4	30	26	27	84	95,5	44	21	37,5	M6x16
29032-514	14,1	14,1	25	26	29,4	30	26	27	84	95,5	44	21	37,5	M6x16
29032-516	16,1	16,1	25	26	29,4	30	26	27	84	95,5	44	21	37,5	M6x16
29032-518	18,1	18,1	25	26	29,4	30	26	27	84	95,5	44	21	37,5	M6x16
29032-520	20,1	20,1	45	40	40	-	40	43	136	146	73	33	51	M8x35
29032-525	25,1	25,1	45	40	40	-	40	43	136	146	73	33	51	M8x35
29032-530	30,1	30,1	45	40	40	-	40	43	136	146	73	33	51	M8x35
29032-540	40,2	40,2	60	56	56	-	56	60	188	200	100	48	70	M10x50

Tube clamps

swivel, plastic

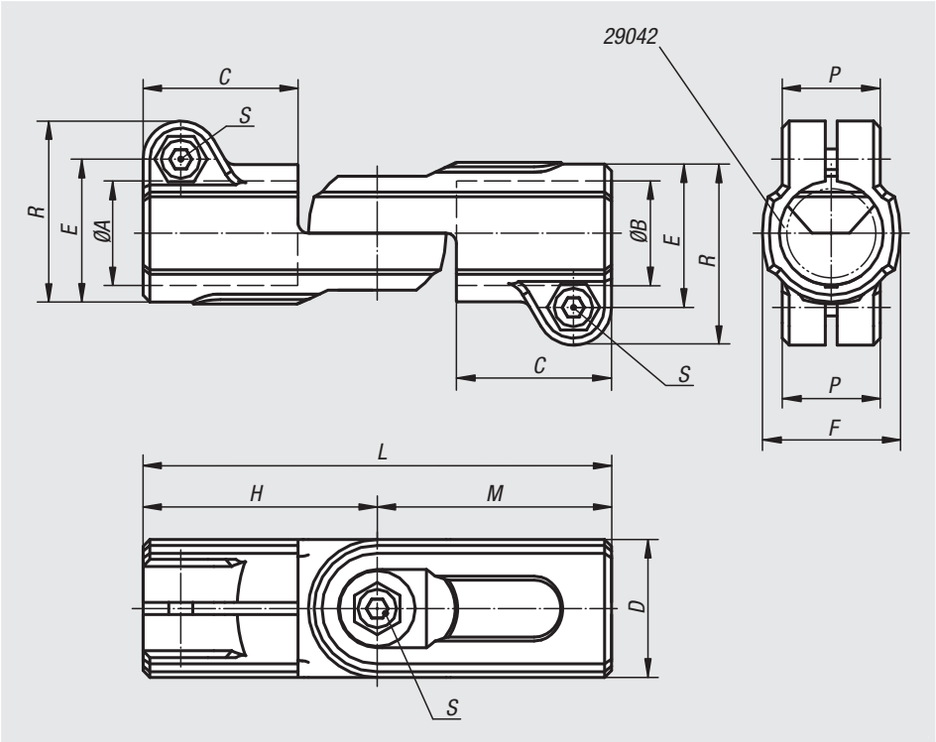

Material:
Thermoplastic.
DIN 7984 screws and DIN 985 nuts steel.

Version:
Black.
Screws and nuts galvanized.

Sample order:
nlm 29034-18

Note:
Tube swivel clamps can be seamlessly rotated through 180°.
The standard size for round tubes is Ø18 mm or Ø30 mm. Use reducer sleeves 29042 if smaller tubes are to be clamped or a conversion from round to square tubes is required.

On request:
Plastic levers for locking.

Accessories:
- Reducer sleeves 29042
- Round and square tubes 29050

Order No.	A	B	C	D	E	F	H	L	M	P	R	S
29034-18	18	18	30	25	26,5	25	45	90	45	21	34	M6x18
29034-30	30	30	45	40	41,5	40	68	136	68	28,5	52,5	M8x25

Tube clamps

swivel, aluminium

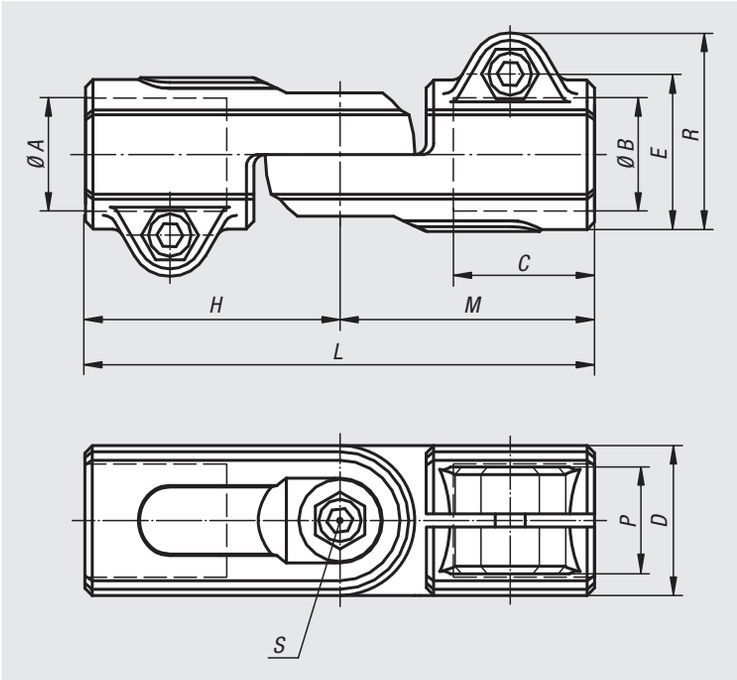

Material:
Cast aluminium.
DIN 7984 screws and DIN 985 nuts steel.

Version:
Vibratory ground.
Screws and nuts galvanized.

Sample order:
nlm 29034-540

Note:
Tube swivel clamps can be seamlessly rotated through 180°.

On request:
Levers for locking and other diameters.

Accessories:
- Round and square tubes 29050

Order No.	A	B	C	D	E	H	L	M	P	R	S
29034-512	12,1	12,1	25	26	29,4	44	88	44	21	37,5	M6x16
29034-514	14,1	14,1	25	26	29,4	44	88	44	21	37,5	M6x16
29034-516	16,1	16,1	25	26	29,4	44	88	44	21	37,5	M6x16
29034-518	18,1	18,1	25	26	29,4	44	88	44	21	37,5	M6x16
29034-520	20	20	45	40	40	73	146	73	33	51	M8x35
29034-525	25,1	25,1	45	40	40	73	146	73	33	51	M8x35
29034-530	30,1	30,1	43	40	40	73	146	73	33	51	M8x35
29034-540	40,15	40,15	59	56	58	100	200	100	48	70	M10x50

Tube clamps

swivel base, plastic

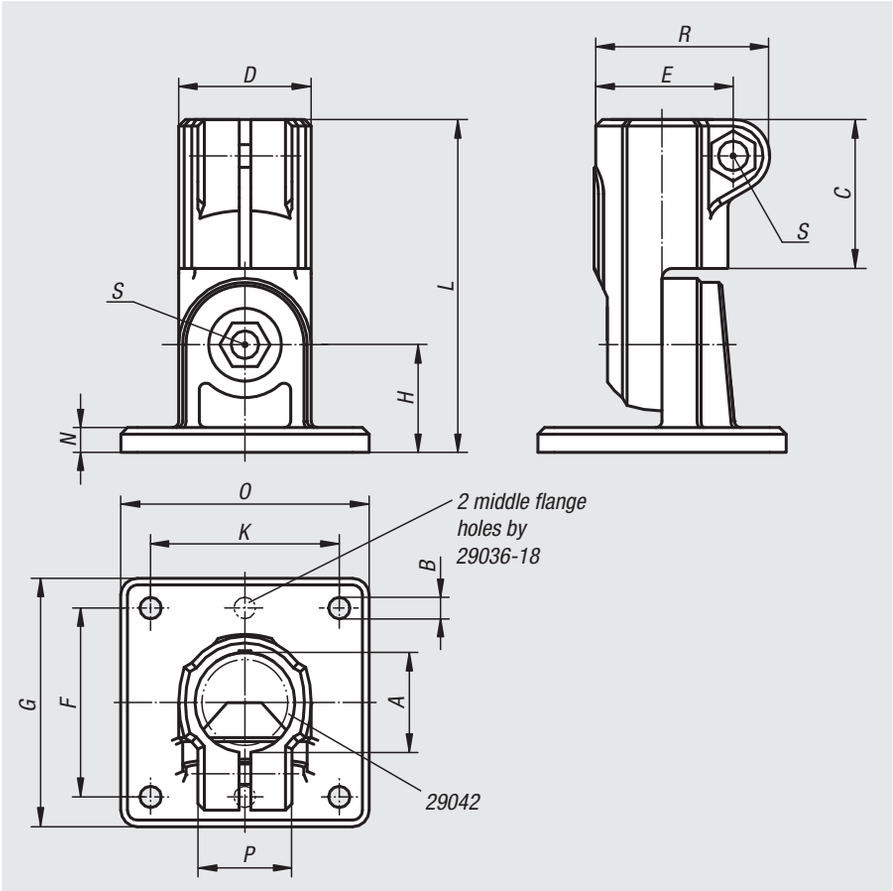

Material:
Thermoplastic.
DIN 7984 screws and DIN 985 nuts steel.

Version:
Black.
Screws and nuts galvanized.

Sample order:
nlm 29036-18

Note:
Tube swivel clamps can be seamlessly rotated through 180°.
The standard size for round tubes is Ø18 mm or Ø30 mm. Use reducer sleeves 29042 if smaller tubes are to be clamped or a conversion from round to square tubes is required.

On request:
Plastic levers for locking.

Accessories:
- Reducer sleeves 29042
- Round and square tubes 29050

Order No.	A	B	C	D	E	F	G	H	K	L	N	O	P	R	S
29036-18	18	5,3 (2x)	30	25	26,5	40	50	20	-	65	5	35	21	34	M6x18
29036-30	30	6,5 (4x)	45	40	41,5	60	75	32,5	60	100,5	7,5	75	28,5	52,5	M8x25

Tube clamps

swivel base, aluminium

Material:
Cast aluminium.
DIN 7984 screws and DIN 985 nuts steel.

Version:
Vibratory ground.
Screws and nuts galvanized.

Sample order:
nlm 29036-518

Note:
Tube swivel clamps can be seamlessly rotated through 180°.

* Elongated hole

On request:
Levers for locking and other diameters.

Accessories:
- Round and square tubes 29050

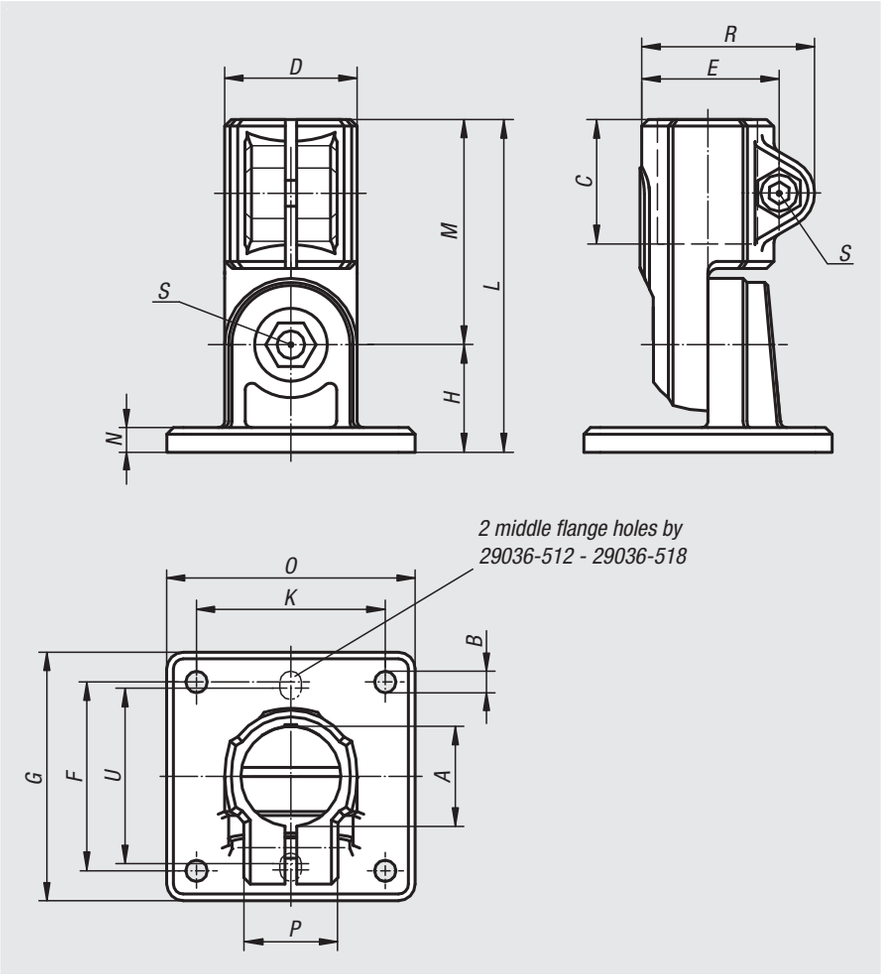

Order No.	A	B	C	D	E	F	G	H	K	L	M	N	O	P	R	S	U
29036-512	12,1	5,3* (2x)	25	26	29,4	40	50	20	-	64	44	5	35	21	37,5	M6x16	38
29036-514	14,1	5,3* (2x)	25	26	29,4	40	50	20	-	64	44	5	35	21	37,5	M6x16	38
29036-516	16,1	5,3* (2x)	25	26	29,4	40	50	20	-	64	44	5	35	21	37,5	M6x16	38
29036-518	18,1	5,3* (2x)	25	26	29,4	40	50	20	-	64	44	5	35	21	37,5	M6x16	38
29036-520	20	6,5 (4x)	45	40	40	57	75	33	57	106	73	7	75	33	51	M8x35	-
29036-525	25,1	6,5 (4x)	45	40	40	57	75	33	57	106	73	7	75	33	51	M8x35	-
29036-530	30,1	6,5 (4x)	45	40	40	57	75	33	57	106	73	7	75	33	51	M8x35	-
29036-540	40,2	8,5 (4x)	60	56	56	76	100	44	76	144	100	10	100	48	68	M10x50	-

Reducer sleeves

square

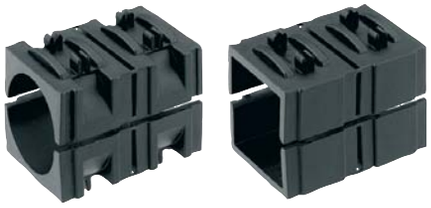

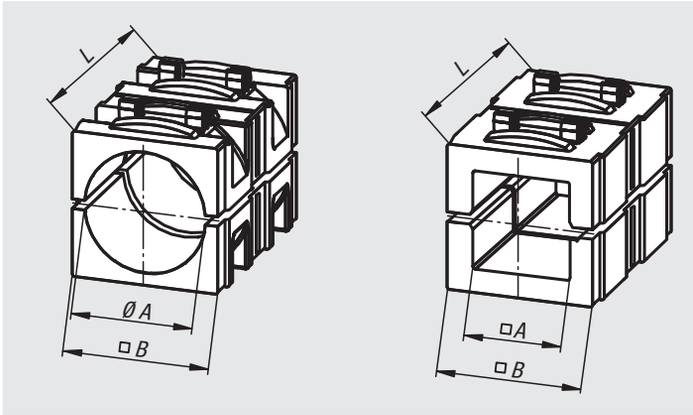

Material:
Thermoplastic.

Version:
black.

Sample order:
nlm 29040-03020

Note:
Reducer sleeves are for clamping smaller tubes or where a conversion of square to round tubes is required.

Order No.	Version	A	B	L
29040-03020	round	Ø 20,25	30,3	45
29040-03025	round	Ø 25,25	30,3	45
29040-03030	round	Ø 30,25	30,3	45
29040-13020	square	20,5	30,3	45
29040-13025	square	25,5	30,3	45

Reducer sleeves

round

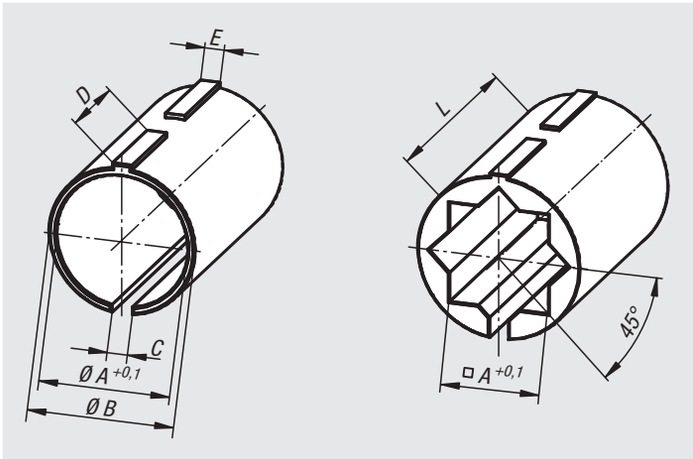

Material:
Thermoplastic.

Version:
black.

Sample order:
nlm 29042-03020

Note:
Reducer sleeves are for clamping smaller tubes or where a conversion of round to square tubes is required.

Order No.	Version	A	B	C	D	E	L
29042-01812	round	12,25	18	2,5	11,9	2,4	30
29042-01814	round	14,25	18	2,5	11,9	2,4	30
29042-01815	round	15,25	18	2,5	11,9	2,4	30
29042-01816	round	16,25	18	2,5	11,9	2,4	30
29042-03020	round	20,25	30	3,5	18,9	3,4	45
29042-03025	round	25,25	30	3,5	18,9	3,4	45
29042-11810	square	10,25	18	2,5	11,9	2,4	30
29042-13020	square	20,25	30	3,5	18,9	3,4	45

Round and square tubes

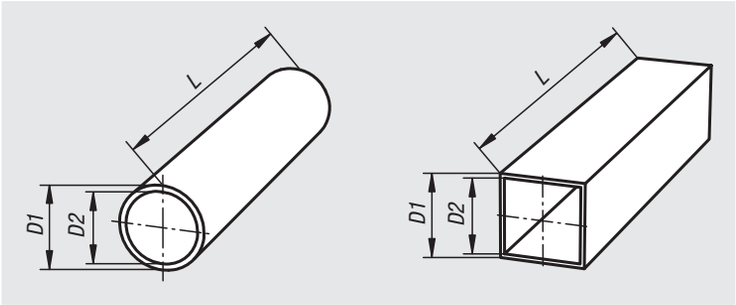

Material:
Steel 1.0037.
Aluminium EN AW-6060.

Version:
Steel galvanized.
Aluminium clear anodized.

Sample order:
nlm 29050-0112X500 (include length L)

Note:
The machining tolerances of these round and square tubes are specially suited to the tube clamping system.

* solid bar.

On request:
- stainless steel tubes
- aluminium tubes, black anodized
- customer specific lengths

Order No.	Description	Main material	Description	D1	D2	L
29050-0112X	round tube	steel	Ø12 x 1,5	12 ±0,1	9	500/1000/2000
29050-0114X	round tube	steel	Ø14 x 1,5	14 ±0,1	11	500/1000/2000
29050-0115X	round tube	steel	Ø15 x 1,5	15 ±0,1	12	500/1000/2000
29050-0116X	round tube	steel	Ø16 x 1,5	16 ±0,1	13	500/1000/2000
29050-0118X	round tube	steel	Ø18 x 1,5	18 ±0,1	15	500/1000/2000
29050-0120X	round tube	steel	Ø20 x 2	20 ±0,1	16	500/1000/2000
29050-0125X	round tube	steel	Ø25 x 2	25 ±0,1	21	500/1000/2000
29050-0130X	round tube	steel	Ø30 x 2	30 ±0,1	26	500/1000/2000
29050-0140X	round tube	steel	Ø40 x 4	40 ±0,15	32	500/1000/2000
29050-0150X	round tube	steel	Ø50 x 4	50 ±0,2	42	500/1000/2000
29050-0220X	round tube	aluminium	Ø20 x 3	20	14	500/1000/2000
29050-0230X	round tube	aluminium	Ø30 x 2	30 ±0,1	26	500/1000/2000
29050-0240X	round tube	aluminium	Ø40 x 3	40 ±0,15	34	500/1000/2000
29050-0250X	round tube	aluminium	Ø50 x 3	50 ±0,2	44	500/1000/2000

Order No.	Description	Main material	Description	D1	D2	L
29050-4120X	square tube	steel	20 x 20 x 1	20 ±0,3	18	500/1000/2000
29050-4125X	square tube	steel	25 x 25 x 1,5	25 ±0,3	22	500/1000/2000
29050-4130X	square tube	steel	30 x 30 x 2	30 ±0,3	26	500/1000/2000
29050-4140X	square tube	steel	40 x 40 x 3	40 ±0,4	34	500/1000/2000
29050-4210X	square tube	aluminium	10 x 10	10*	-	500/1000/2000
29050-4220X	square tube	aluminium	20 x 20 x 1,5	20 ±0,2	17	500/1000/2000
29050-4230X	square tube	aluminium	30 x 30 x 2	30 ±0,2	26	500/1000/2000
29050-4240X	square tube	aluminium	40 x 40 x 4	40 ±0,3	32	500/1000/2000

Tube end plugs

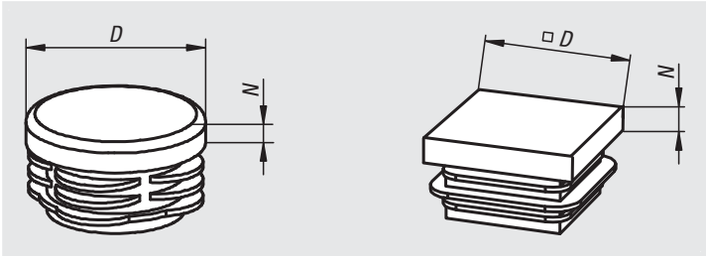

Material:
Thermoplastic.

Version:
black.

Sample order:
nlm 29056-025200

Note:
These plugs are for corner protection and plugging the tube ends.
They can be pushed in by hand or tapped in with a plastic hammer.

Order No.	Version	D	N	Suitable for
29056-018150	for round tubes	18	5	Ø18 x 1,5
29056-020200	for round tubes	20	5	Ø20 x 2
29056-025200	for round tubes	25	5	Ø25 x 2
29056-030200	for round tubes	30	5	Ø30 x 2
29056-040300	for round tubes	40	5	Ø40 x 3
29056-040400	for round tubes	40	5	Ø40 x 4
29056-050400	for round tubes	50	5	Ø50 x 3 / Ø50 x 4
29056-420100	for square tubes	20	5	20 x 20 x 1
29056-425150	for square tubes	25	5	25 x 25 x 1,5
29056-430200	for square tubes	30	5	30 x 30 x 2
29056-440300	for square tubes	40	5	40 x 40 x 3
29056-440400	for square tubes	40	5	40 x 40 x 4

Technical information on linear actuators

These linear actuators are efficient, economical and universally applicable. They ideally combine high rigidity, low deflection, high loads and easy handling. Four sizes are available for different applications and loads (tube sizes from Ø18 mm to Ø50 mm).

Features:
– Standard travel over 2000 mm possible
– Position accuracy up to ±0.2 mm / 300 mm
– Travel speed up to 1.5 m/min
– Drive by trapezoid thread spindle
– Mounting position optional

Technical description:
In a tube, a threaded spindle mounted on bearings with guide nut converts a rotation into linear movement of a carriage. The nut has a carrier key to prevent it turning.

Mounting the linear actuator:
Depending on the mounting position and application, linear actuators can be mounted using our tube clamping elements.

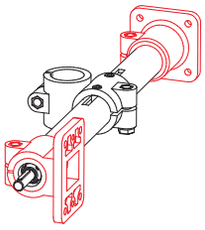

Speed:

n = required spindle speed.
max. spindle speed with:
plain bearing 80 rpm.
ball bearing 250 rpm.

Type E	Pitch mm
18	2
30	3
40	4
50	4

$$n\ [rpm] = \frac{\text{Speed [m/min] x 1000[mm]}}{\text{Spindle pitch [mm]}}$$

Idling torques:

Type E	Spindle with plain bearing [Nm]	Spindle with ball bearings [Nm]
18	-	0,20
30	0,45	0,35
40	0,65	0,50
50	1,20	0,90

Load data*:

F force [N]
M moment [Nm]
I area moment of inertia [cm4]

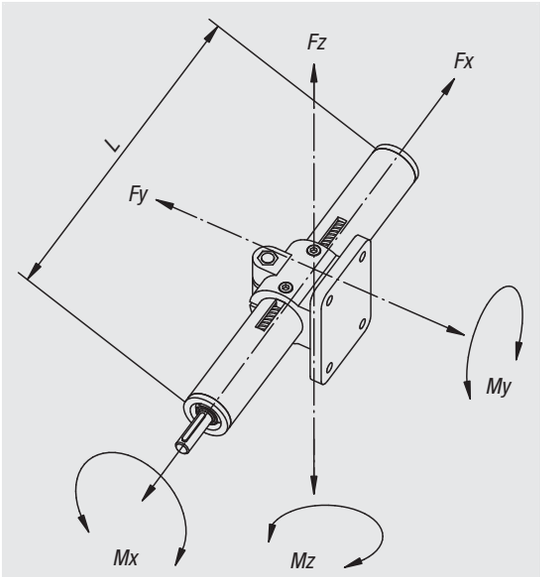

Length	Fx 500	Fy 500/1000/1500	Fz 500/1000/1500
Type E 18	400	90 / 10 / -	60 / 8 / -
Type E 30	800	500 / 60 / 10	500 / 50 / 9
Type E 40	1000	2100 / 250 / 60	1900 / 140 / 50
Type E 50	1700	3000 / 600 / 140	3000 / 600 / 140

Type E	Mx	My	Mz	Iy	Iz
18	1,5	4	4	0,22	0,27
30	6	15	15	1,34	1,56
40	14	40	40	4,58	5,24
50	30	65	65	11,31	12,32

Linear actuators

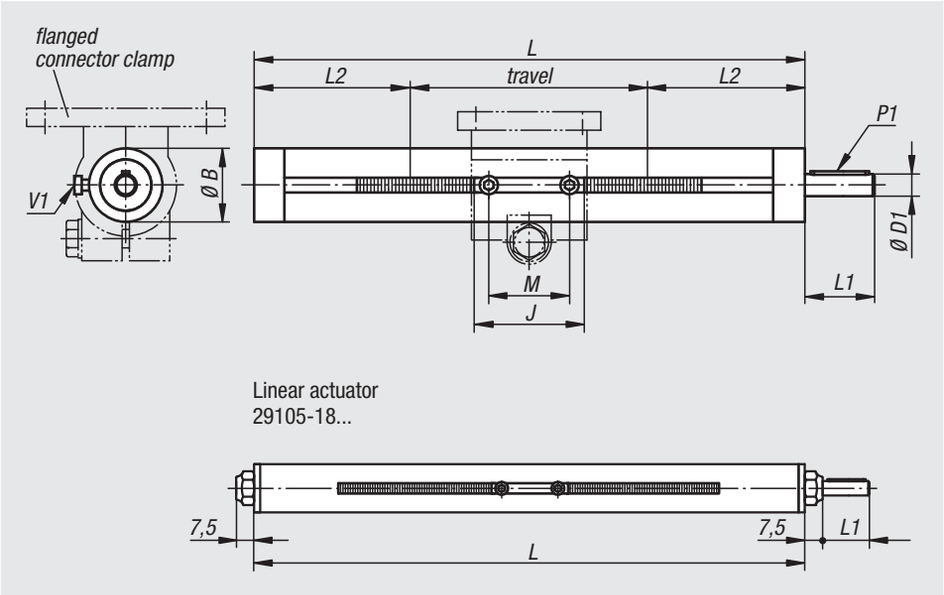

Material, version:
Precision tube DIN EN 10305, stainless steel 1.4301.
For type E 18, galvanized steel.
Trapezoid thread spindle steel, RH thread, rolled.

Sample order:
nlm 29105-300001X500

Note:
Medium speed range, self-locking.

On request:
LH thread, stainless steel, 2 drive pins, other travel lengths, handwheels.

Accessories:
- Guide clamps 29120, 29125, 29130, 29135
- Tube clamps form our tube clamping system

Functional principle:
A rotating movement of the threaded spindle is converted into a linear movement of the guide carriage.

Order No.	Version	Type E	Spindle	L Standard length	Travel	B	D1	J	L1	L2	M	P1 parallel key DIN 6885	V1
29105-300001X300	plain bearing	30	Tr 14x3	300	100	30	8 h8	38	26	100	28	2 x 2 x 20	M4x8
29105-300001X500	plain bearing	30	Tr 14x3	500	300	30	8 h8	38	26	100	28	2 x 2 x 20	M4x8
29105-300001X800	plain bearing	30	Tr 14x3	800	600	30	8 h8	38	26	100	28	2 x 2 x 20	M4x8
29105-400001X300	plain bearing	40	Tr 20x4	300	91	40	12 h8	55	38	104,5	44	4 x 4 x 32	M6x10
29105-400001X500	plain bearing	40	Tr 20x4	500	291	40	12 h8	55	38	104,5	44	4 x 4 x 32	M6x10
29105-400001X800	plain bearing	40	Tr 20x4	800	591	40	12 h8	55	38	104,5	44	4 x 4 x 32	M6x10
29105-400001X1000	plain bearing	40	Tr 20x4	1000	791	40	12 h8	55	38	104,5	44	4 x 4 x 32	M6x10
29105-500001X500	plain bearing	50	Tr 20x4	500	265	50	12 h8	63	38	117,5	44	4 x 4 x 32	M6x10
29105-500001X800	plain bearing	50	Tr 20x4	800	565	50	12 h8	63	38	117,5	44	4 x 4 x 32	M6x10
29105-500001X1000	plain bearing	50	Tr 20x4	1000	765	50	12 h8	63	38	117,5	44	4 x 4 x 32	M6x10
29105-180101X300	ball bearing	18	Tr 10x2	300	145	18	6 h9	24	17	77,5	18	2 x 2 x 12	M3x5
29105-180101X500	ball bearing	18	Tr 10x2	500	345	18	6 h9	24	17	77,5	18	2 x 2 x 12	M3x5
29105-300101X300	ball bearing	30	Tr 14x3	300	100	30	8 h8	38	26	100	28	2 x 2 x 20	M4x8
29105-300101X500	ball bearing	30	Tr 14x3	500	300	30	8 h8	38	26	100	28	2 x 2 x 20	M4x8
29105-300101X800	ball bearing	30	Tr 14x3	800	600	30	8 h8	38	26	100	28	2 x 2 x 20	M4x8
29105-400101X300	ball bearing	40	Tr 20x4	300	91	40	12 h8	55	38	104,5	44	4 x 4 x 32	M6x10
29105-400101X500	ball bearing	40	Tr 20x4	500	291	40	12 h8	55	38	104,5	44	4 x 4 x 32	M6x10
29105-400101X800	ball bearing	40	Tr 20x4	800	591	40	12 h8	55	38	104,5	44	4 x 4 x 32	M6x10
29105-400101X1000	ball bearing	40	Tr 20x4	1000	791	40	12 h8	55	38	104,5	44	4 x 4 x 32	M6x10
29105-500101X500	ball bearing	50	Tr 20x4	500	265	50	12 h8	63	38	117,5	44	4 x 4 x 32	M6x10
29105-500101X800	ball bearing	50	Tr 20x4	800	565	50	12 h8	63	38	117,5	44	4 x 4 x 32	M6x10
29105-500101X1000	ball bearing	50	Tr 20x4	1000	765	50	12 h8	63	38	117,5	44	4 x 4 x 32	M6x10

Linear actuator connector clamps

cross

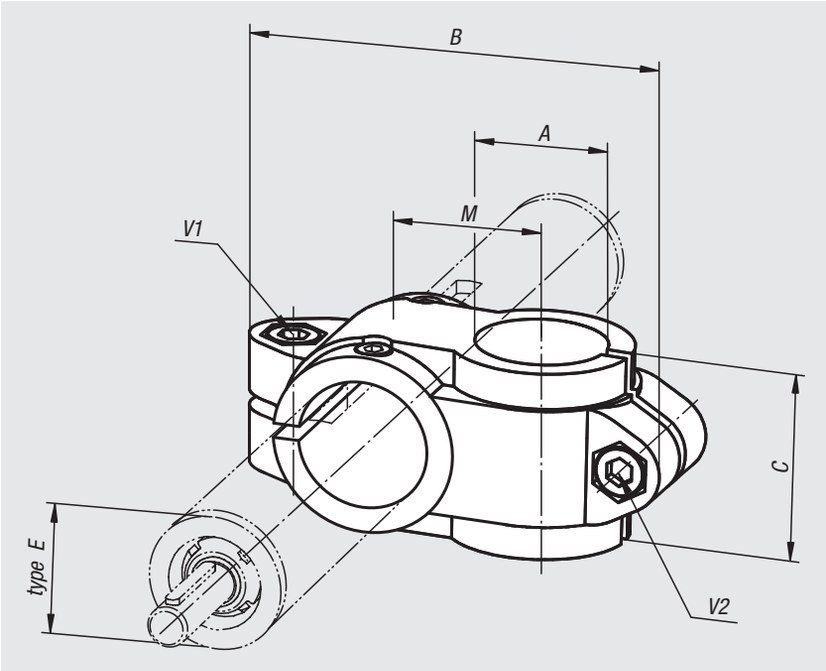

Material:
Cast aluminium.
DIN 7984 screws and DIN 985 nuts steel.

Version:
Black powder-coated.
Screws and nuts galvanized.

Sample order:
nlm 29120-1818

On request:
Levers for locking.

Order No.	Type E	A	B	C	M	V1	V2
29120-1818	18	18	66	25,5	20	M6x16	M6x16
29120-3020	30	20	99	40	33	M8x25	M8x25
29120-3030	30	30	99	40	33	M8x25	M8x25
29120-4020	40	20	109	40	36	M10x30	M8x25
29120-4040	40	40	137	60	45	M10x30	M10x30
29120-5040	50	40	154	70	54	M10x35	M10x35
29120-5050	50	50	154	70	54	M10x35	M10x35

Linear actuator connector clamps

cross

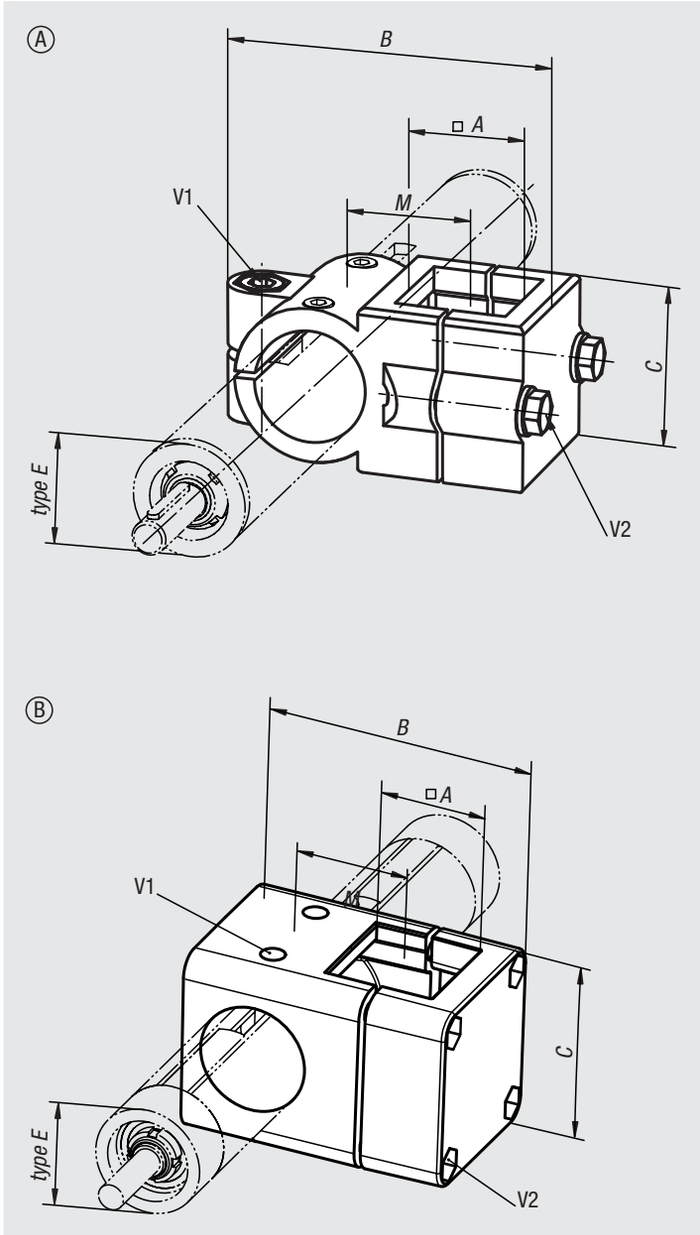

Material:
Cast aluminium.
Screws and nuts steel.

Version:
Black powder-coated.
Clamping screws and nuts galvanized.

Sample order:
nlm 29125-4040

On request:
Levers for locking.

Order No.	Form	Type E	A	B	C	M	V1	V2
29125-3030	A	30	30	86	45	33	M8x35	M8x35
29125-4040	A	40	40	117	60	47	M10x50	M8x45
29125-5050	B	50	50	126	86	53	M8x50	M8x50

Linear actuator connector clamps

flange

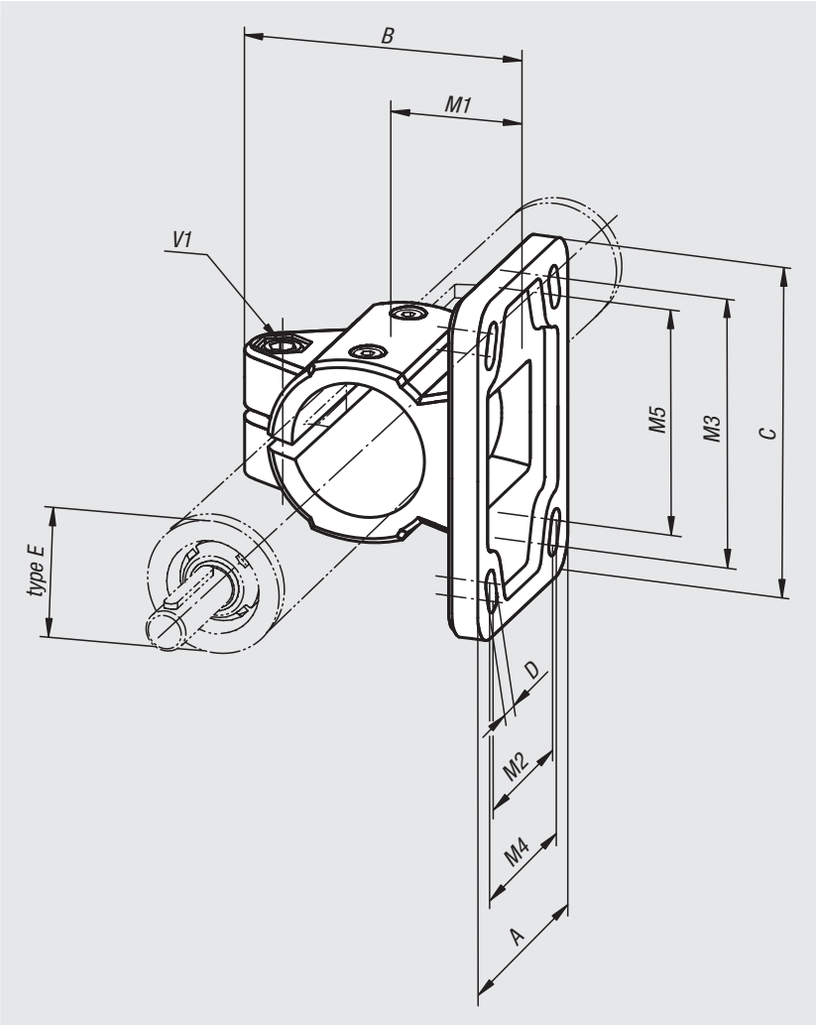

Material:
Cast aluminium.
DIN 7984 screws and DIN 985 nuts steel.

Version:
Black powder-coated.
Screws and nuts galvanized.

Sample order:
nlm 29130-50

Note:
* Elongated hole

On request:
Levers for locking.

Order No.	Type E	A	B	C	D	M1	M2	M3	M4	M5	V1
29130-18	18	37	42,5	50	5,5 (2x)	18	-	40	-	-	M6x16
29130-30	30	55	63	78	6,5* (2x)	30	-	60	-	53	M8x25
29130-40	40	80	87	105	8,5* (4x)	42	52	82	60	80	M10x30
29130-50	50	92	100	130	10,5* (4x)	50	60	100	62	98	M10x35

Linear actuator connector clamps

base

Material:
Cast aluminium.
DIN 7984 screws and DIN 985 nuts steel.

Version:
Black powder-coated.
Screws and nuts galvanized.

Sample order:
nlm 29135-30

On request:
Levers for locking.

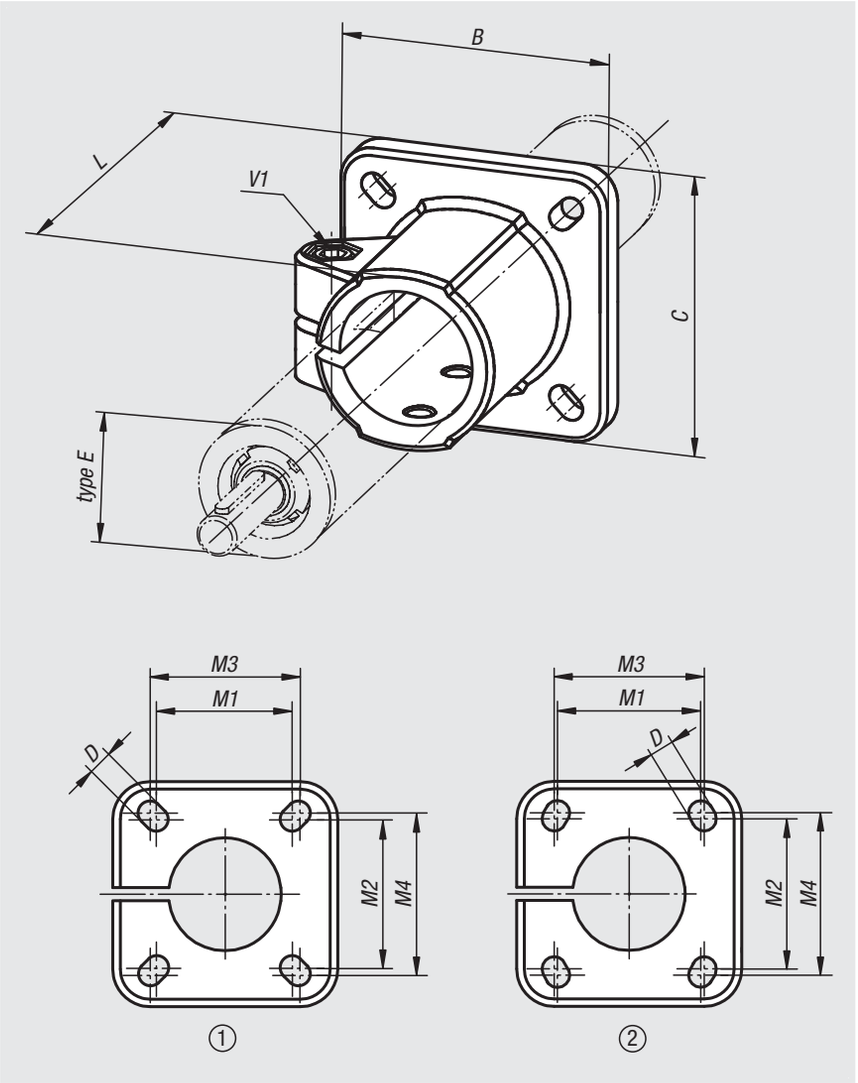

Order No.	hole arrangement	Type E	B	C	D	L	M1	M2	M3	M4	V1
29135-18	1	18	42	42	5,5	37	28	28	30	30	M6x20
29135-30	2	30	60	60	6,5	50	40	42	42	45	M8x25
29135-40	1	40	90	90	8,5	70	60	60	64	64	M10x30
29135-50	1	50	105	105	10,5	85	74	74	80	80	M10x35

Notes

Technical information for monitor brackets

Universal brackets for monitors, touch panels and control units

Bracket with high load capacity for industrial monitors, control units, and touch panels. All movable parts can be adjusted separately from one another without tools using manual elements. The adjusted position is locked reliably even when subjected to vibrations.

A significant advantage of these brackets is the extensive flexibility of end device fastening dimensions and mounting possibilities. The monitor or control unit can be mounted using the round, aluminium fastening element or using a VESA standard 75/100 adapter plate i.e. with a 75 x 75 mm or 100 x 100 mm mounting hole pattern. This means that, in theory almost any housing can be easily attached without using any special elements. The monitor bracket can be installed using the tube clamp to any standard Ø30 mm tube, or with the profile bracket to the slot of any aluminium profile or with the wall bracket to any panel element or wall.

Characteristics
- High-strength materials guarantees permanent loads
- Device connection via universal or VESA adapter plate
- High working ergonomics through absolute freedom of movement
- Vibration resistant angle adjustment (locking in 15° increments)
- Connection to the slot of aluminium profiles or wall mounting

Monitor bracket rotary flange
Max. load 25 kg (static),
90° rotatable

Monitor bracket ball joint
Max. load 10 kg (static),
60° free swivelling

Monitor brackets

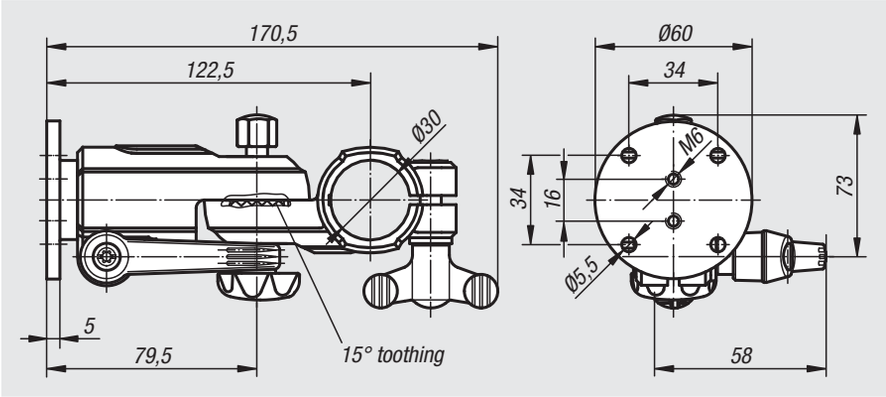

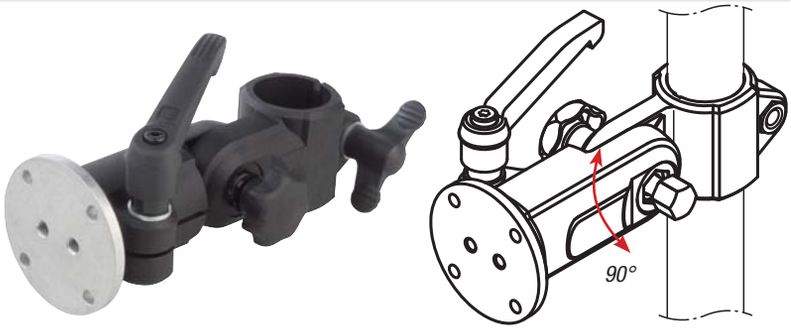

Material:
High-strength material mix of thermoplastic/ aluminium.

Version:
Black/bright.

Sample order:
nlm 29180-3001

Note:
norelem offers two different basic supports for monitors and touch panels used in industrial environments:

With rotary flange: vibration-resistant, lockable monitor bracket with angle adjustment in 15° increments for monitors/control units up to 25 kg (static) and universal adapter plate. Suitable for attachment to Ø30 mm round tubes.

With ball joint: enables a swivel range of 60° for loads up to 10 kg (static) and universal adapter plate. Suitable for attachment to Ø30 mm round tubes.

A wall bracket, profile bracket or a VESA 75/100 adapter plate is available as an option for the different connections.

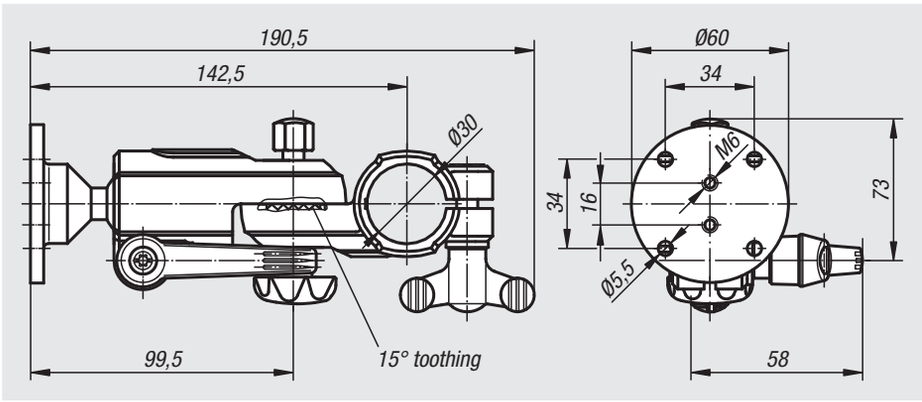

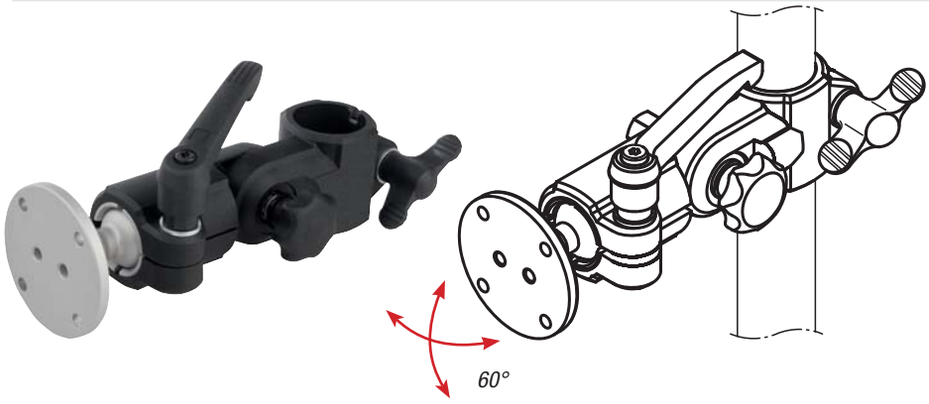

Order No.	Image	Version
29180-3001		with rotary flange
29180-3002		with ball joint
29180-3003		wall bracket
29180-3004		profile bracket
29180-75100		VESA adapter plate

Monitor brackets

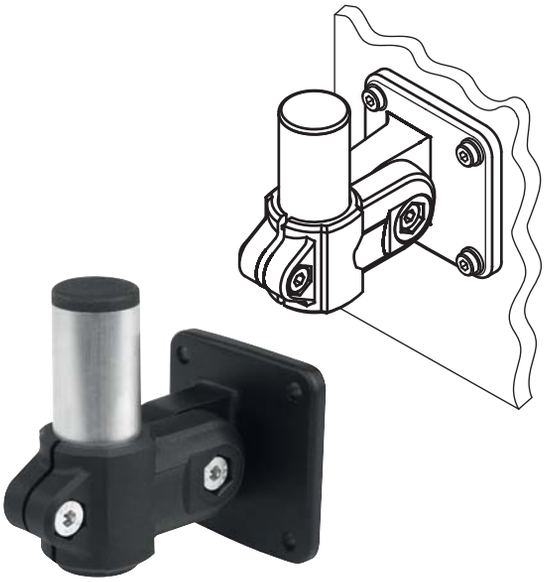

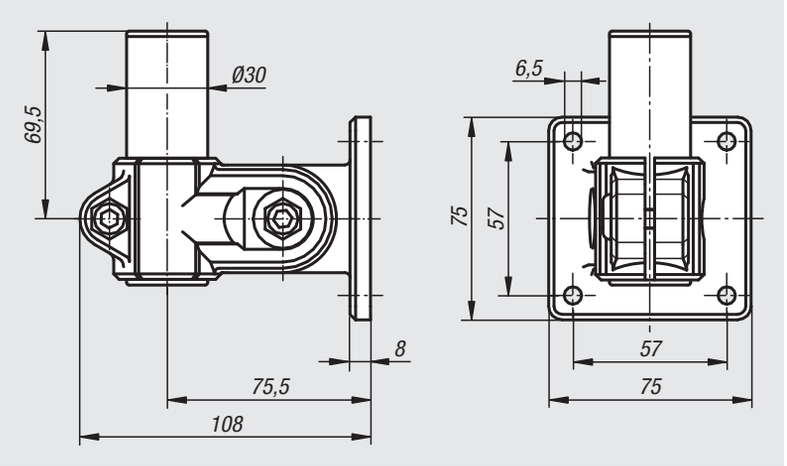

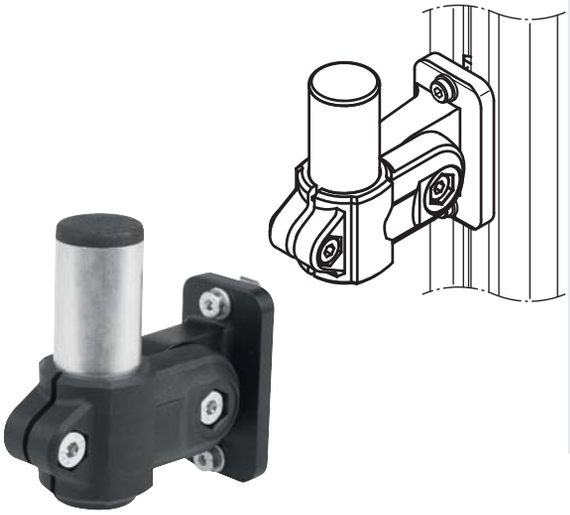

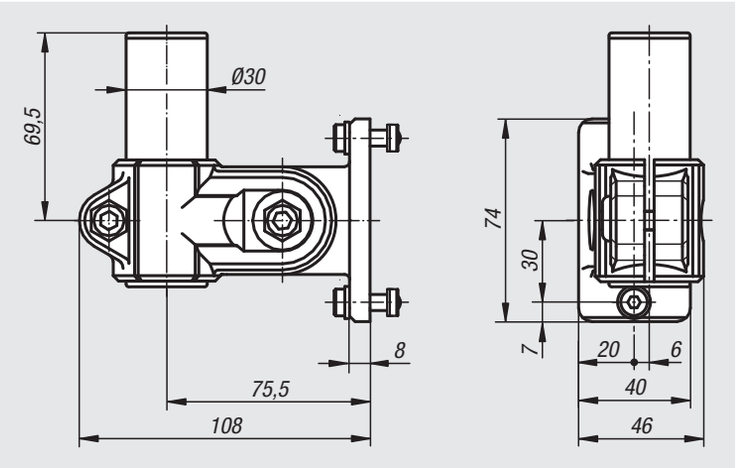

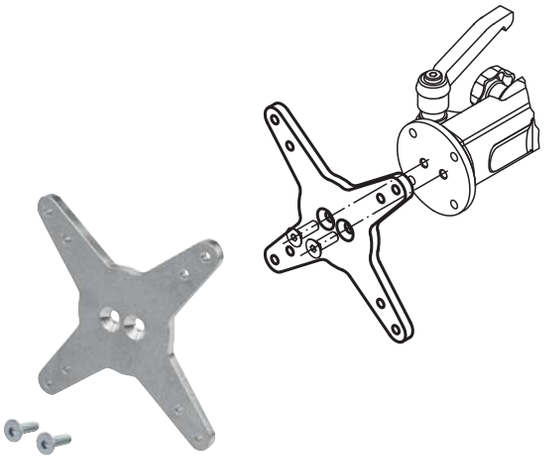

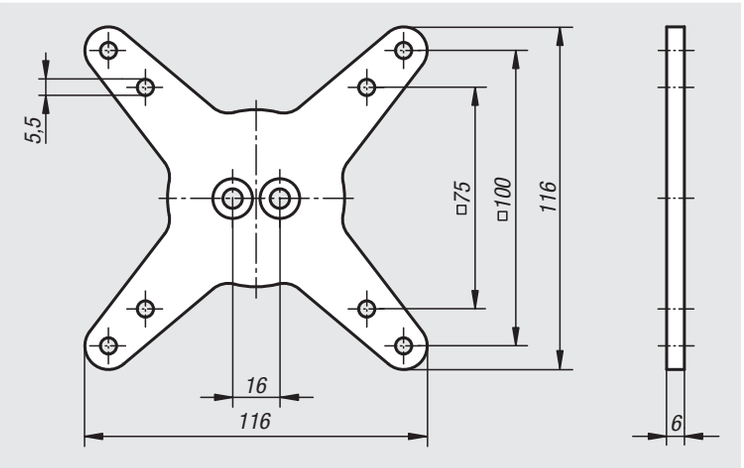

Column bases single

Material:
Aluminium EN AW-6060

Version:
Black anodized

Sample order:
nlm 29200-1122

Note:
Single base for holding columns in four different sizes. Machined contact faces with mounting and centring holes guarantee precise mounting of elements.

Drawing reference:
position tolerance of reamed holes: ±0,01
position tolerance of holes: ±0,1

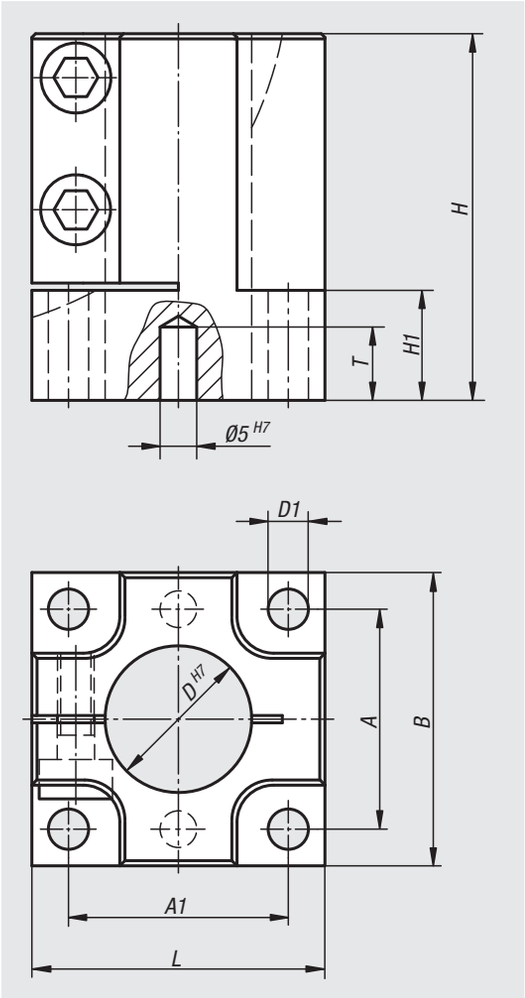

Order No.	Size	A	A1	B	D	D1	H	H1	L	T
29200-1122	12	22	22	30	12	5,5	35	7	30	8
29200-1202	20	30	30	40	20	5,5	50	15	40	10
29200-1302	30	40	40	50	30	6,5	50	15	50	10
29200-1402	40	48	48	60	40	8,5	50	15	60	10

Column bases double

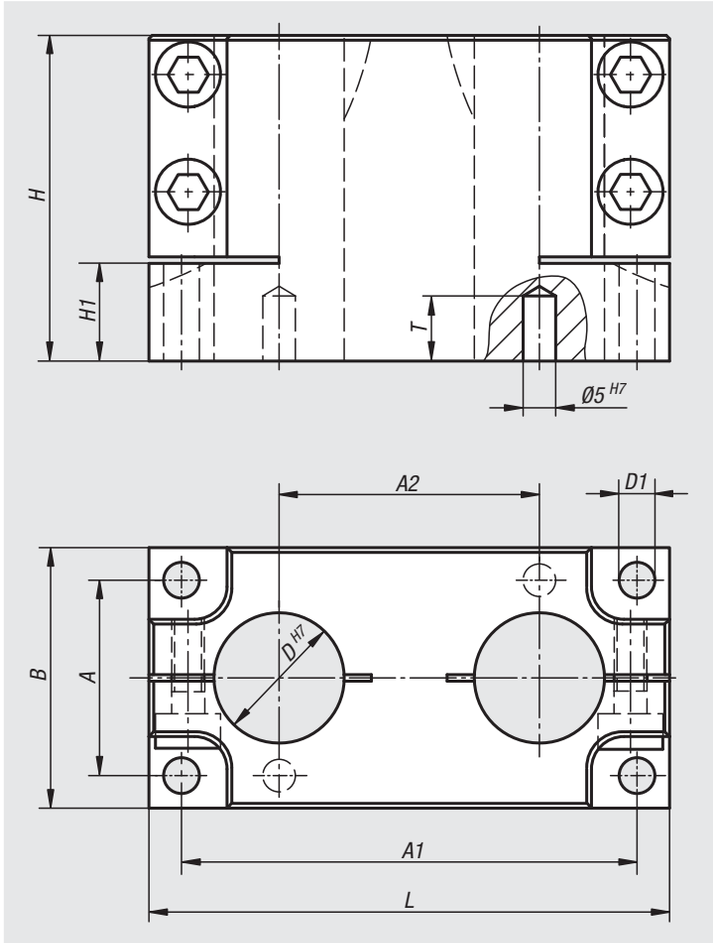

Material:
Aluminium EN AW-6060

Version:
Black anodized

Sample order:
nlm 29205-2122

Note:
Double base for holding columns in four different sizes. Machined contact faces with mounting and centring holes guarantee precise mounting of elements.

Drawing reference:
position tolerance of reamed holes: ±0,01
position tolerance of holes: ±0,1

Order No.	Size	A	A1	A2	B	D	D1	H	H1	L	T
29205-2122	12	22	52	30	30	12	5,5	35	7	60	8
29205-2202	20	30	70	40	40	20	5,5	50	15	80	10
29205-2302	30	40	90	50	50	30	6,5	50	15	100	10
29205-2402	40	48	108	60	60	40	8,5	50	15	120	10

Column clamps double

Material:
Aluminium EN AW-6060

Version:
Black anodized

Sample order:
nlm 29207-2122

Note:
Double column clamps in four different sizes. Machined mounting faces with mounting and centring holes guarantee precise mounting of elements.

Drawing reference:
position tolerance of reamed holes: ±0,01
position tolerance of holes: ±0,1

29207-2122
29207-2202

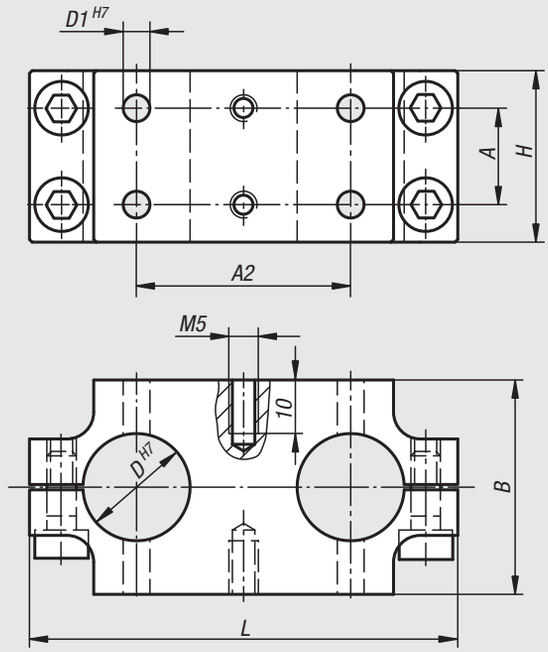

29207-2302
29207-2402

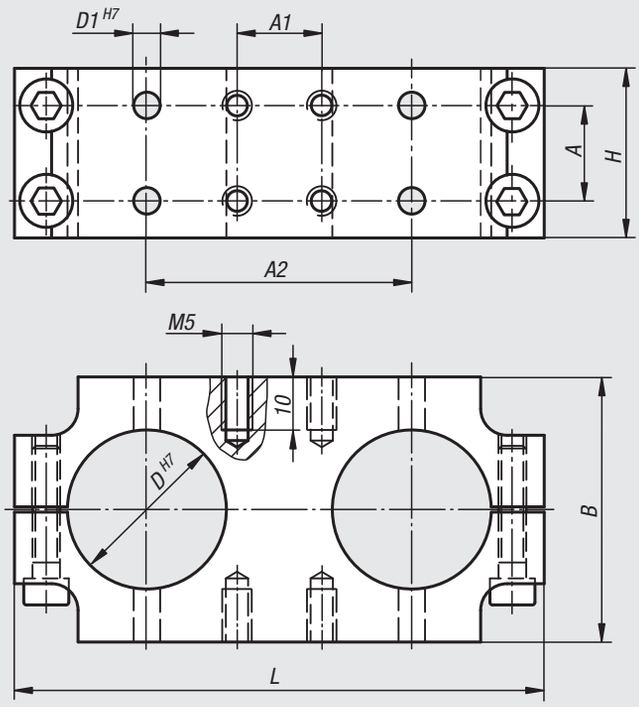

Order No.	Size	A	A1	A2	B	D	D1	H	L
29207-2122	12	12	-	30	30	12	5	26	60
29207-2202	20	18	-	40	40	20	5	32	80
29207-2302	30	18	16	50	50	30	5	32	100
29207-2402	40	18	26	60	60	40	6	32	120

Adjustment units

Material:
Aluminium EN AW-6060

Version:
Black anodized

Sample order:
nlm 29210-122

Note:
Units for precise adjustment of components in the X-Y axis. Allows compensation for machining tolerances in mechanical assemblies. Matches our single and double bases. The uniform hole pattern of the respective sizes allows the adjustment units to be fitted under the base at a later date.

Adjustment range: X: ±3 mm
Adjustment range: Y: ±3 mm

Drawing reference:
position tolerance of reamed holes: ±0,01
position tolerance of holes: ±0,1

FS = lock screw (2x)
JS = setscrew (4x)

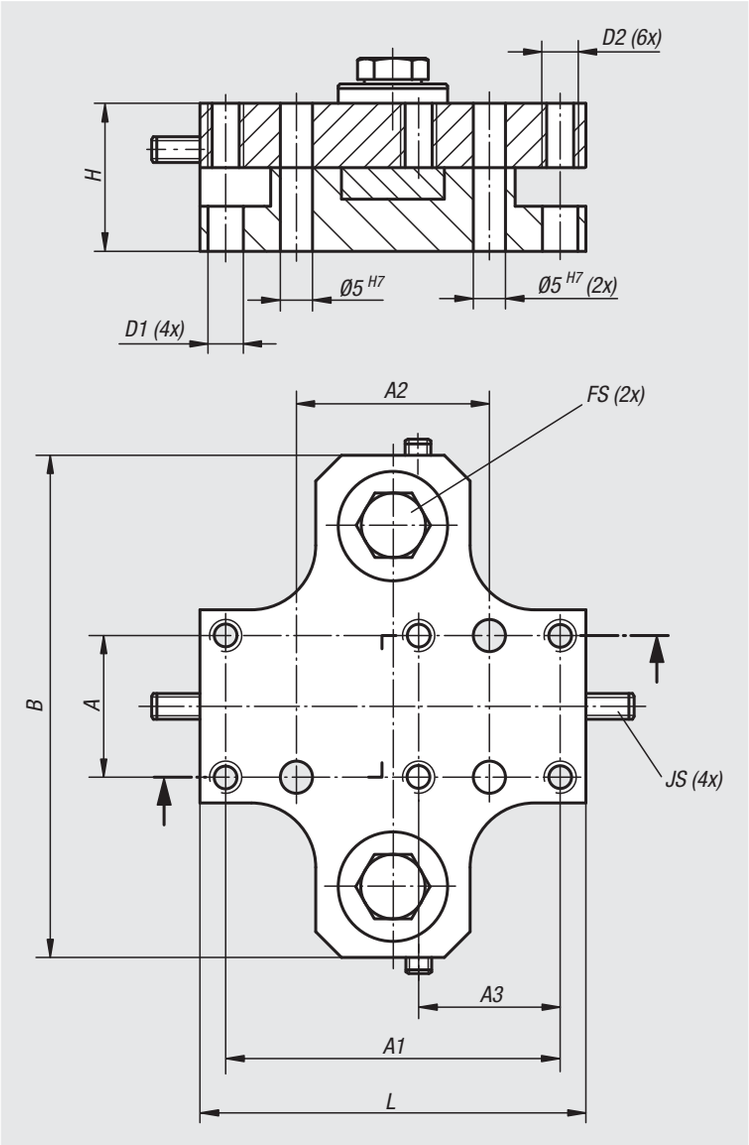

Order No.	Size	A	A1	A2	A3	B	D1	D2	H	L
29210-122	12	22	52	30	22	78	5,5	M5	23	60
29210-202	20	30	70	40	30	88	5,5	M5	23	80
29210-302	30	40	90	50	40	110	6,5	M6	32	100
29210-402	40	48	108	60	48	120	8,5	M8	32	120

Column shaft collars

Material:
Aluminium EN AW-6060

Version:
Black anodized

Sample order:
nlm 29215-122

Note:
These shaft collars enable column bases and clamps to the precisely adjusted in the height and so guarantee the exact positioning of elements.

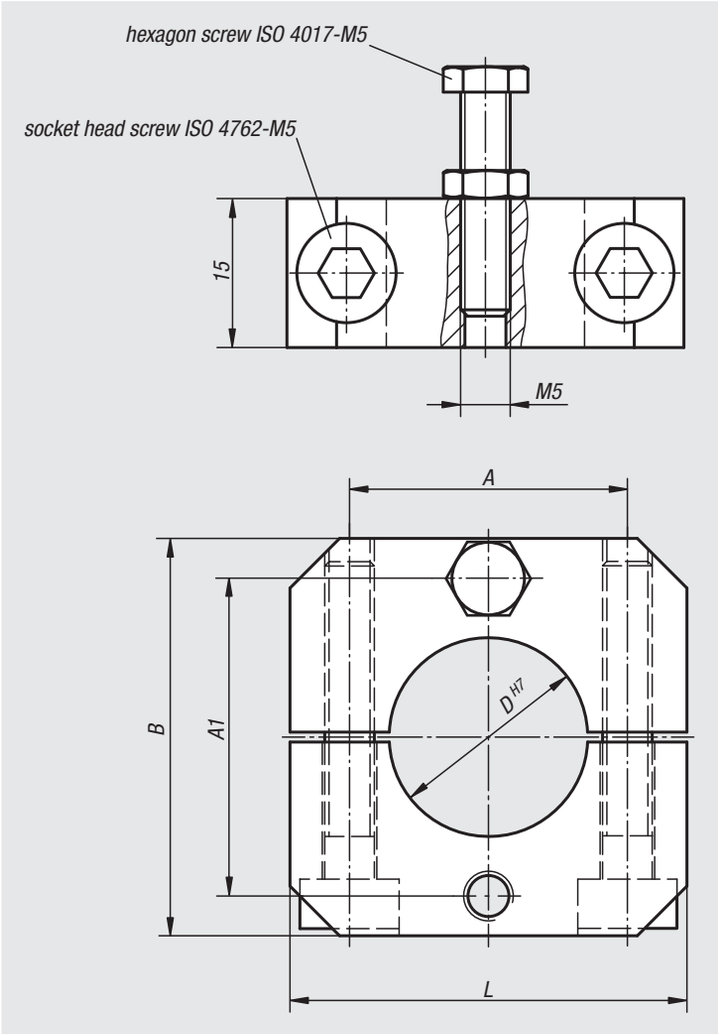

Order No.	Size	A	A1	B	D	L
29215-122	12	19	22	30	12	30
29215-202	20	28	32	40	20	40
29215-302	30	38	42	50	30	50
29215-402	40	48	52	60	40	60

Rods stainless steel

Material:
Stainless steel 1.4305.

Version:
Bright, ground.

Sample order:
nlm 29240-121X0100 (include length L)

Note:
These ground stainless steel columns enable the versatile construction of many assembly configurations with only a few standard components.

Ø12 and Ø20 = solid bar.
Ø30 and Ø40 = tubes (wall thickness 5 mm).

On request:
Other lengths.

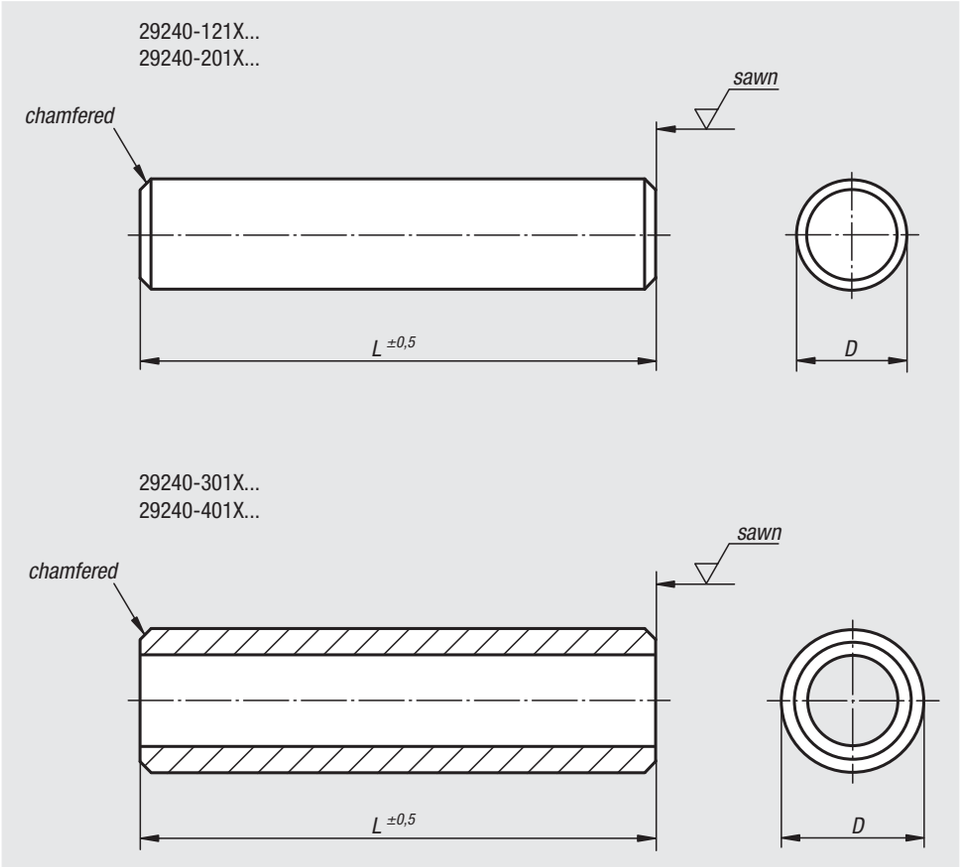

Order No.	Description	Size	D	L
29240-121X	rod	12	12	100/200/300/400/500
29240-201X	rod	20	20	100/200/300/400/500
29240-301X	round tube	30	30	100/200/300/400/500
29240-401X	round tube	40	40	100/200/300/400/500

Notes

31000

Inspection tables
Gauge stands
Gauge joints

31000

Inspection tables

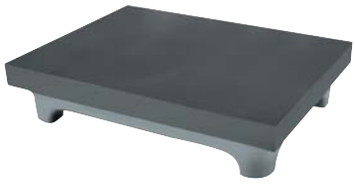

Material:
GJL 250 annealed.

Sample order:
nlm 31000-03

Note:
Plate surface with dust grooves on request.

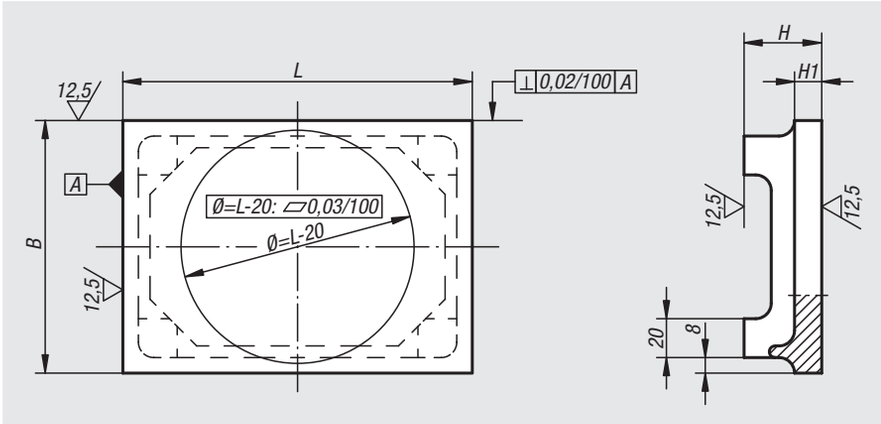

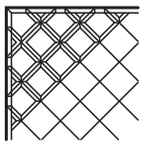

Order No.	L	B	H	H1
31000-01	200	150	45	15
31000-02	250	200	45	15
31000-03	300	200	45	15
31000-04	350	250	45	15
31000-05	350	300	45	15
31000-06	400	350	60	20

31020

Inspection blocks

with column

Material:
Black granite (primary stone).

Version:
Block precision grade 0

Sample order:
nlm 31020-01

Note:
Primary stone has major benefits over conventional granite:
- 3 times more wear resistance.
- 20% greater density.
- 3 times less heat expansion.

Suitable dial gauge holders see 31140 and 31141.

Order No.	Base plate length x width x height	column
31020-01	200 x 150 x 40	ø25 x 260

Support cylinders

for workpieces with collar

Material:
Hardened steel

Version:
Ground

Sample order:
nlm 31090-111

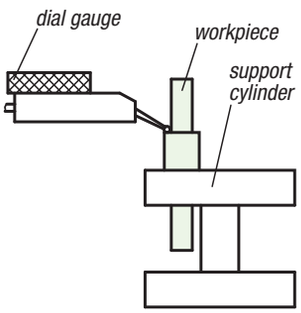

Order No.	Hole diameters	Diameter increments	No. of holes	Parallelism of contact faces	Distance between contact faces
31090-111	1 - 11	0,5	21	< 0,01	46
31090-220	2 - 20	1	19	< 0,01	52

Gauge holders articulated arm

with central hydraulic lock

Sample order:
nlm 31100-12

Note:
The 4-part articulated arm is locked by the centre knob.
Including screw for fine adjustment.

Order No.	total height	Effective radius	Magnetic base length	Magnetic base width	Magnetic base height	Magnetic force N
31100-01	310	260	61	50	55	600
31100-02	480	400	76	50	55	900

Order No.	Version	Connecting thread	total height	Effective radius
31100-11	without magnetic foot	M8x8	255	260
31100-12	without magnetic foot	M10x11	425	400

31102

Gauge stands magnetic

Sample order:
nlm 31102-01

Note:
Base 900 N magnetic force.

Order No.	total height	Column height	Ø column	Magnetic base length	Magnetic base width	Magnetic base height	Connecting thread	Magnetic force N
31102-01	287	232	16	76	50	55	M10	900

31120

Magnetic stands

Sample order:
nlm 31120-01

Note:
Magnetic base with On/Off switch
(see also 09210-03)

Order No.	total height	Column height	Ø column	Magnetic base length	Magnetic base width	Magnetic base height	Connecting thread	Magnetic force N
31120-01	287	232	16	76	50	55	M10	900

31125

Magnetic stands

Version:
Magnetic base: shielded system, surface galvanized

Sample order:
nlm 31125-01

Note:
Magnetic force 450 N. Application temperature up to 100 °C. Hairline cracks in the magnetic material are unavoidable for technical reasons. They do not impair the function of the magnets in any way. (see also 09065-10).

Order No.	total height	Column height	Ø column	Magnetic base Ø	Magnetic base height	Magnetic stand overall height	Connecting thread
31125-01	284	250	16	80	18	34	M10

31130

Dial gauge arms

Sample order:
nlm 31130-01

Note:
With screw for fine adjustment.

Order No.	total length	Ø of column or bar	Fixation holes, e.g. for dial gauge
31130-01	270	16	3 x Ø8

31140

Dial gauge holders

Material:
Aluminium.

Version:
Black anodized

Sample order:
nlm 31140-065

Note:
Fits on 31020.

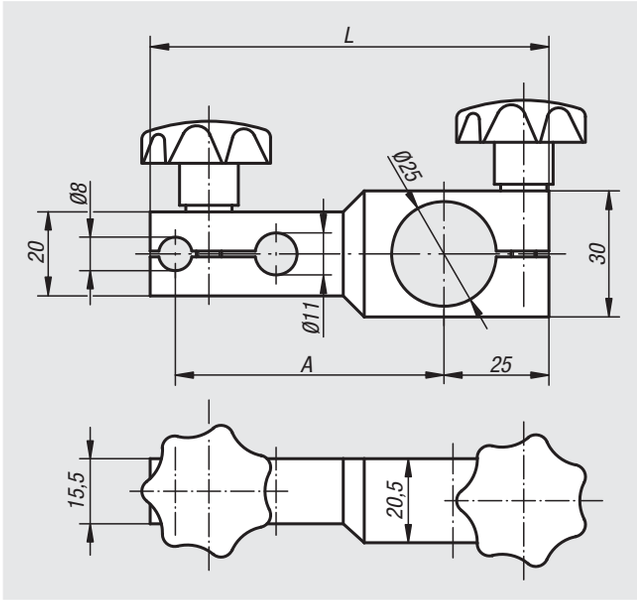

Order No.	A	L
31140-065	65	95
31140-100	100	130

31141

Dial gauge holders

with fine adjustment

Material:
Aluminium.

Version:
Black anodized

Sample order:
nlm 31141-079

Note:
Fits on 31020.

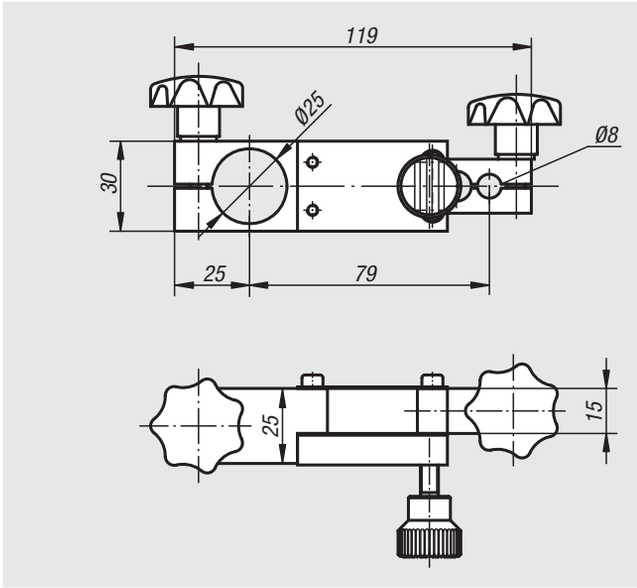

Order No.	Dimensions
31141-079	see drawing

31150

Joint blocks

Material:
Carbon steel.

Version:
Black oxidised.

Sample order:
nlm 31150-1220

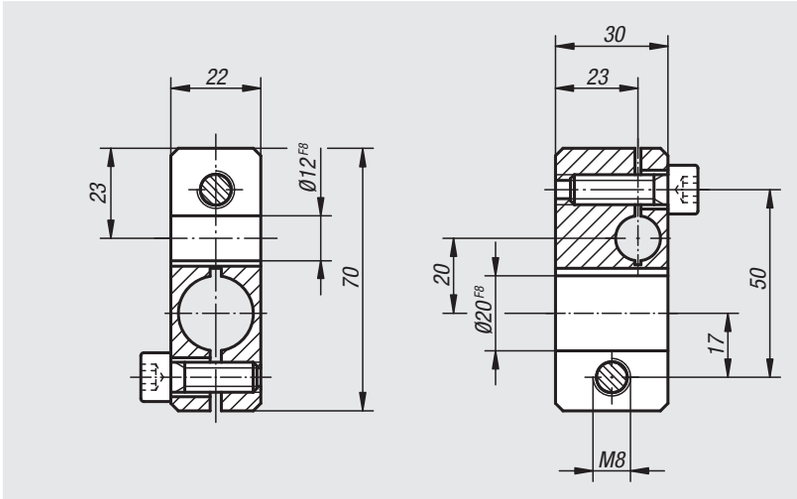

Order No.	Dimensions
31150-1220	see drawing

31152

Joint blocks

Material:
Carbon steel.

Version:
Black oxidised.

Sample order:
nlm 31152-0712

Drawing reference:
1) hole only in 31152-0708

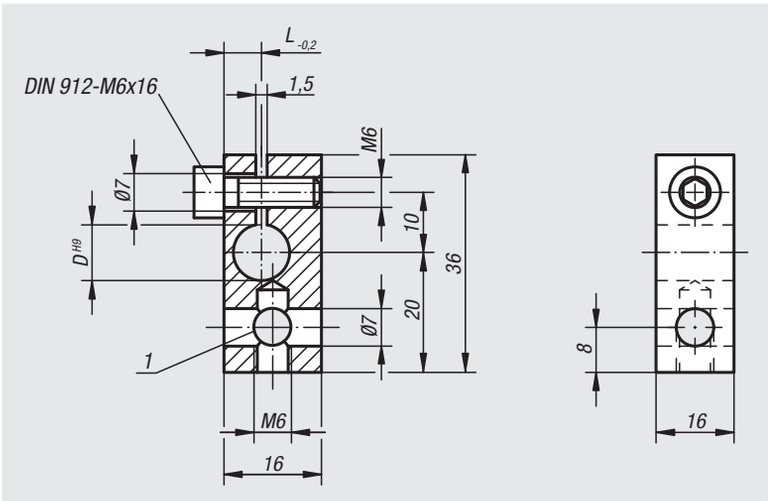

Order No.	D	L
31152-0708	8	5
31152-0710	10	6
31152-0712	12	7

31154

Joint blocks

Material:
Carbon steel.

Version:
Black oxidised.

Sample order:
nlm 31154-1210

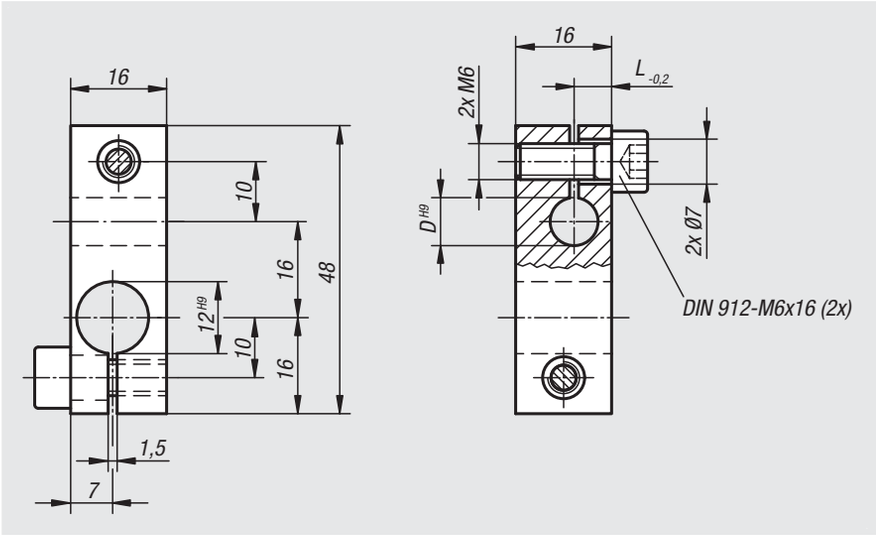

Order No.	D	L
31154-1208	8	5
31154-1210	10	6
31154-1212	12	7

31156

Clamping joints

Material:
Sleeve and pin steel.
Clamp block high-strength aluminium.
Wing grip black grey thermoplastic.

Version:
Sleeve and pin high-gloss chromed.
Clamp block black anodized.

Sample order:
nlm 31156-1616

Note:
Infinitely adjustable.
Wing grip for rapid clamping.

On request:
Different combinations diameters D and D1.

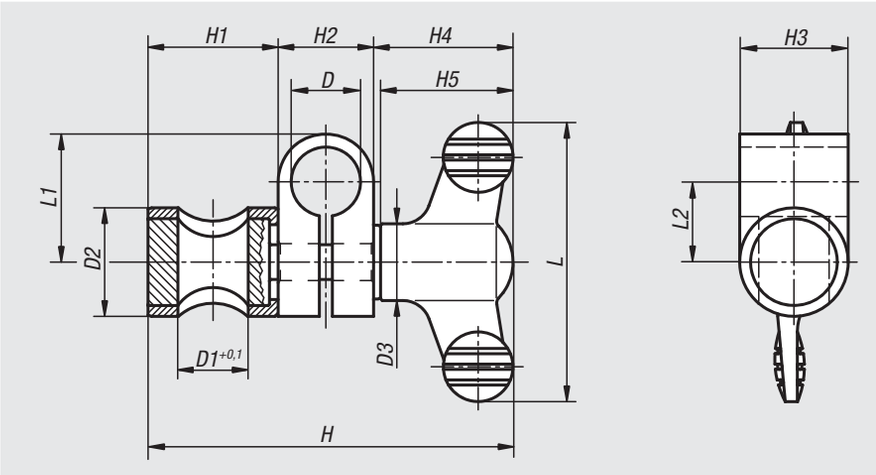

Order No.	Size	D	D1	D2	D3	H	H1	H2	H3	H4	H5	L	L1	L2
31156-0606	1	6	6	14	12	43,6	15	9	14	19,6	18	38	13	8,5
31156-0808	2	8	8	16	14	54,6	17	12	16	25,6	24	50	18	12
31156-1010	3	10	10	18	14	60,6	20	15	18	25,6	24	50	22	14,5
31156-1212	4	12	12	20	21	77,2	23	17	20	37,2	35,6	75	24	15,5
31156-1616	5	16	16	25	21	90,2	31	22	25	37,2	35,6	75	29,5	18,5
31156-2020	6	20	20	30	21	98,2	36	25	30	37,2	35,6	75	30	17,5

32000

Concentricity gauges
Dial gauges

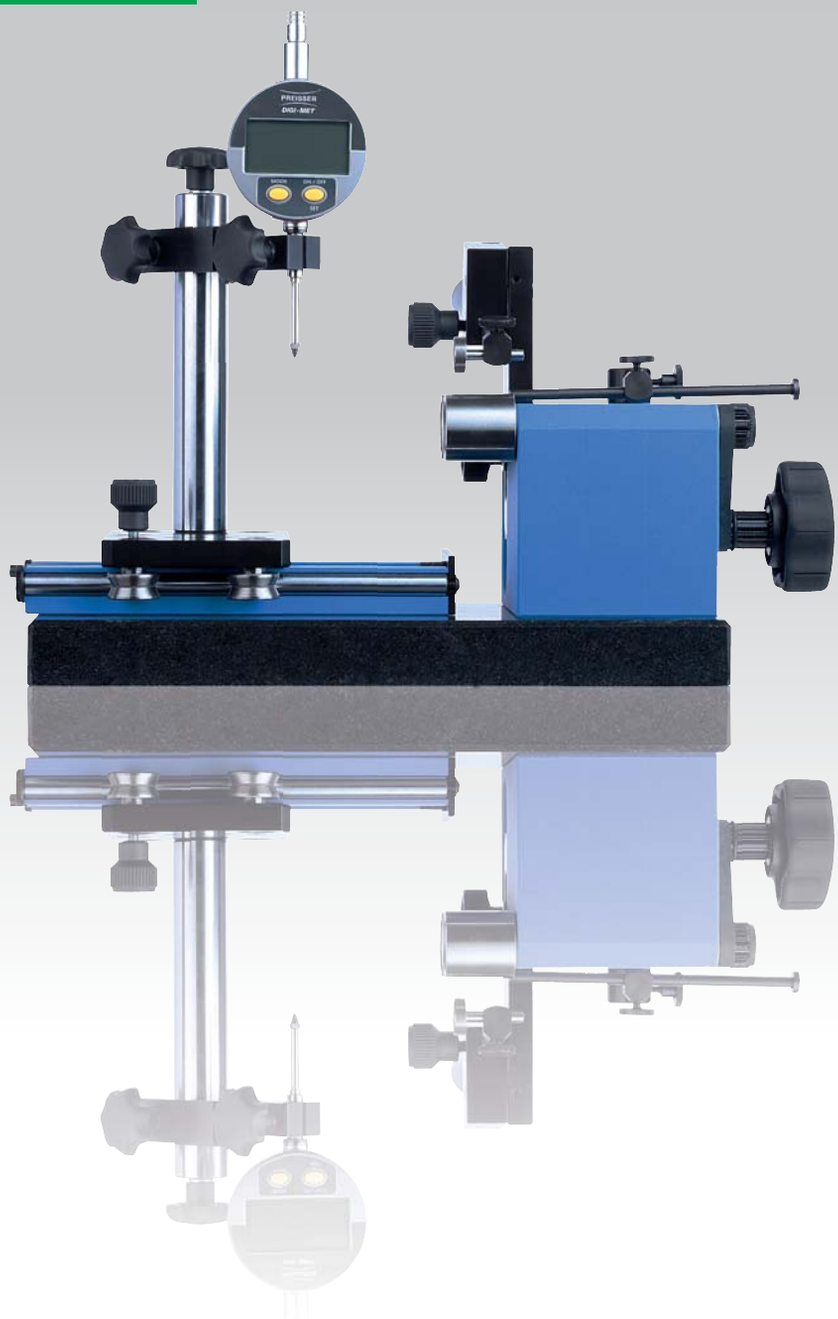

Geometric tolerances

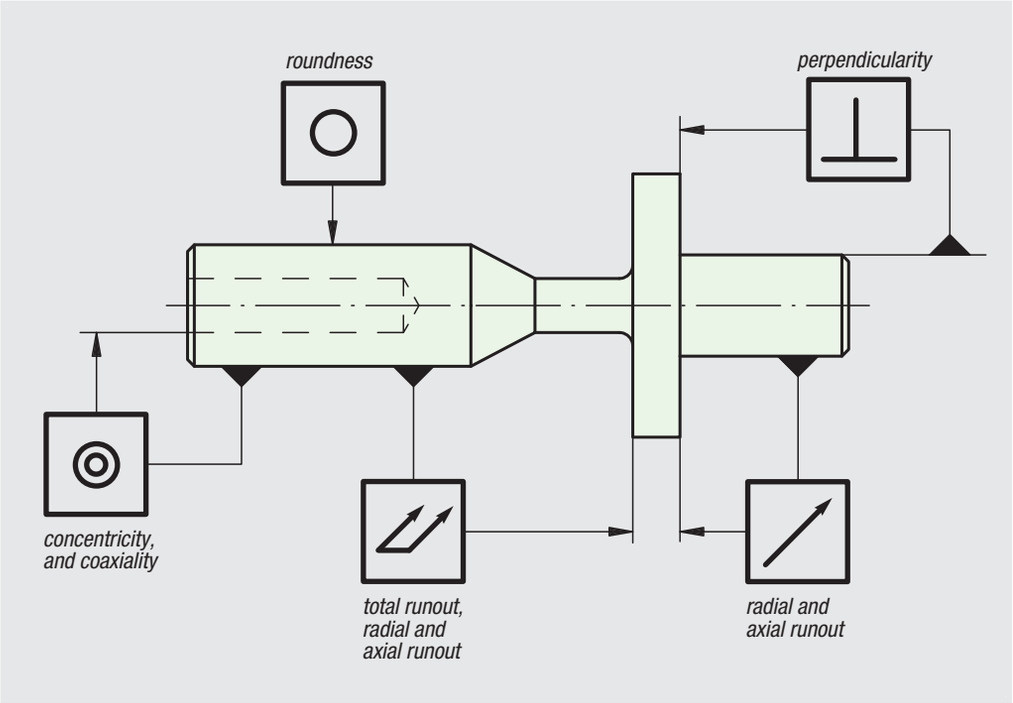

Mounting information for concentricity gauges

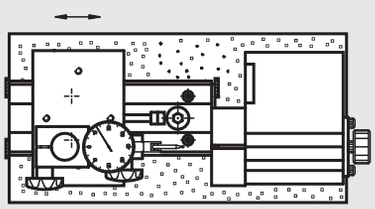

measuring internal diameters

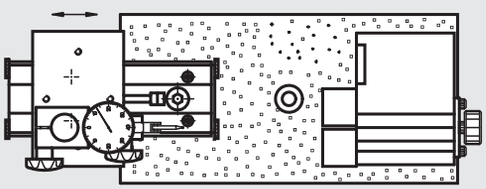

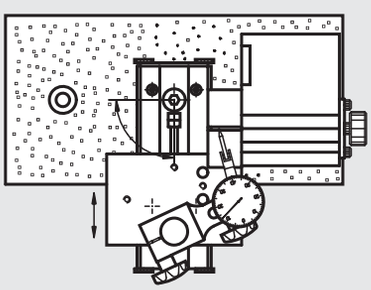

The slide can be rotated through 90° allowing rapid clearance and positioning for changing parts

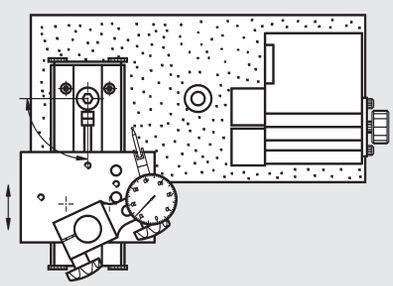

The slide is adjusted with a a screw. The two positioning holes allow for an extended working area.

Testing possibilities

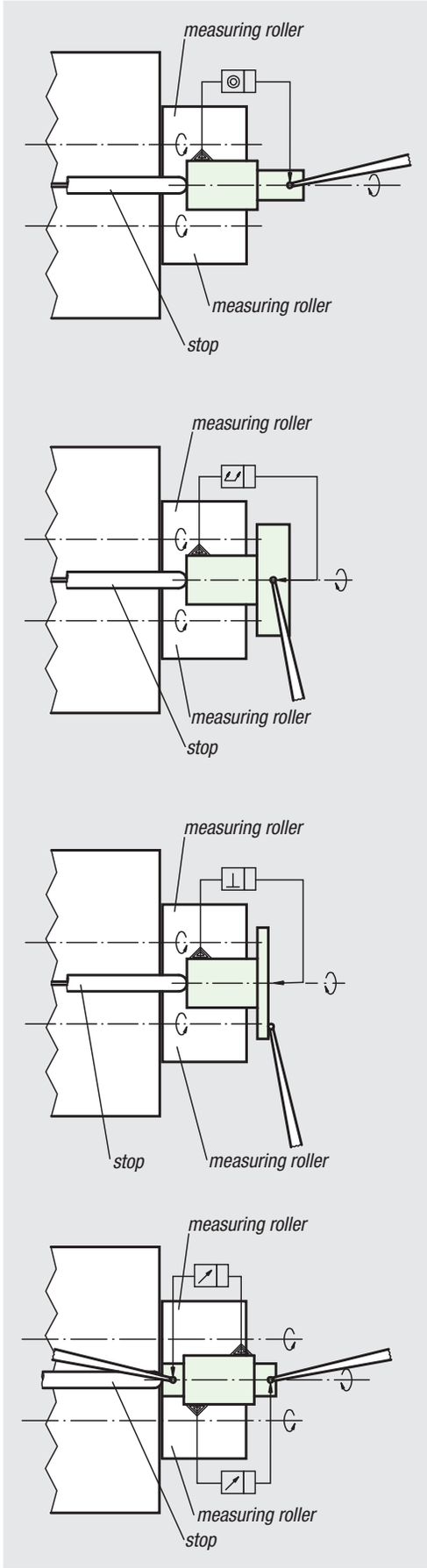

Concentricity gauges

max. Ø 35 mm

Sample order:
nlm 32501-01

Note:
Gauge unit suitable for measuring concentricity, run-out and perpendicularity. The robust design allows the unit to be used in the workshop and metrology room. A swivel contact roller simplifies positioning of the workpiece. The light sliding guides allow the dial gauges to be placed anywhere.

Technical data:
Inspection range Ø 5 mm to Ø 35 mm
Roller spacing min. 29 mm.
Carriage travel max. 100 mm.
Contact roller thrust is adjustable.
Gear driven rollers.

Roller precision: parallelism and coaxialism of both rollers max. 2 µm.

Base plate granite:
300 mm x 130 mm x 25 mm

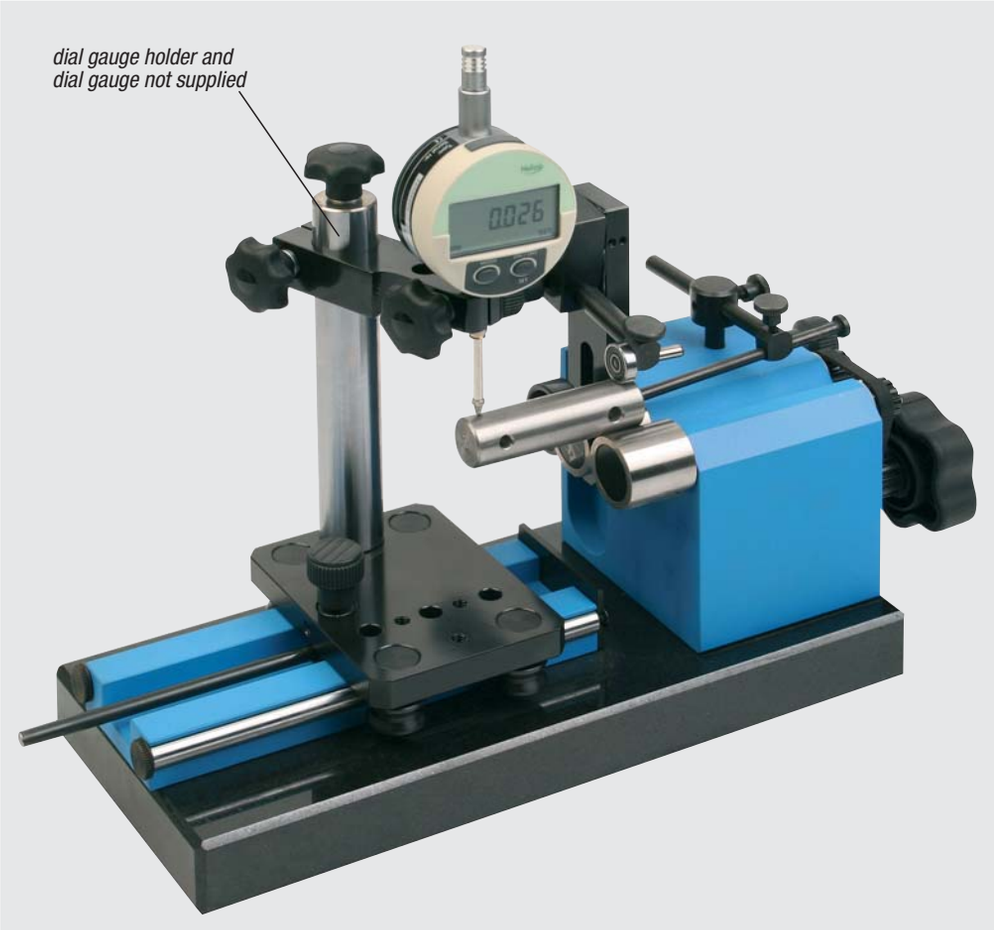

Order No.	Description
32501-01	Concentricity gauge

Concentricity gauges

max. Ø 80 mm

Sample order:
nlm 32506-01

Note:
Gauge unit suitable for measuring concentricity, run-out and perpendicularity.
The robust design allows the unit to be used in the workshop and metrology room. A swivel contact roller simplifies positioning of the workpiece. The light sliding guides allow the dial gauges to be placed anywhere.

Technical data:
Inspection range Ø 5 mm to Ø 80 mm
Roller spacing min. 29 mm, max. 89 mm.
Carriage travel max. 100 mm.
Contact roller thrust is adjustable.
Gear driven rollers.

Roller precision: parallelism and coaxialism of both rollers max. 2 µm.

Base plate granite:
300 mm x 130 mm x 25 mm

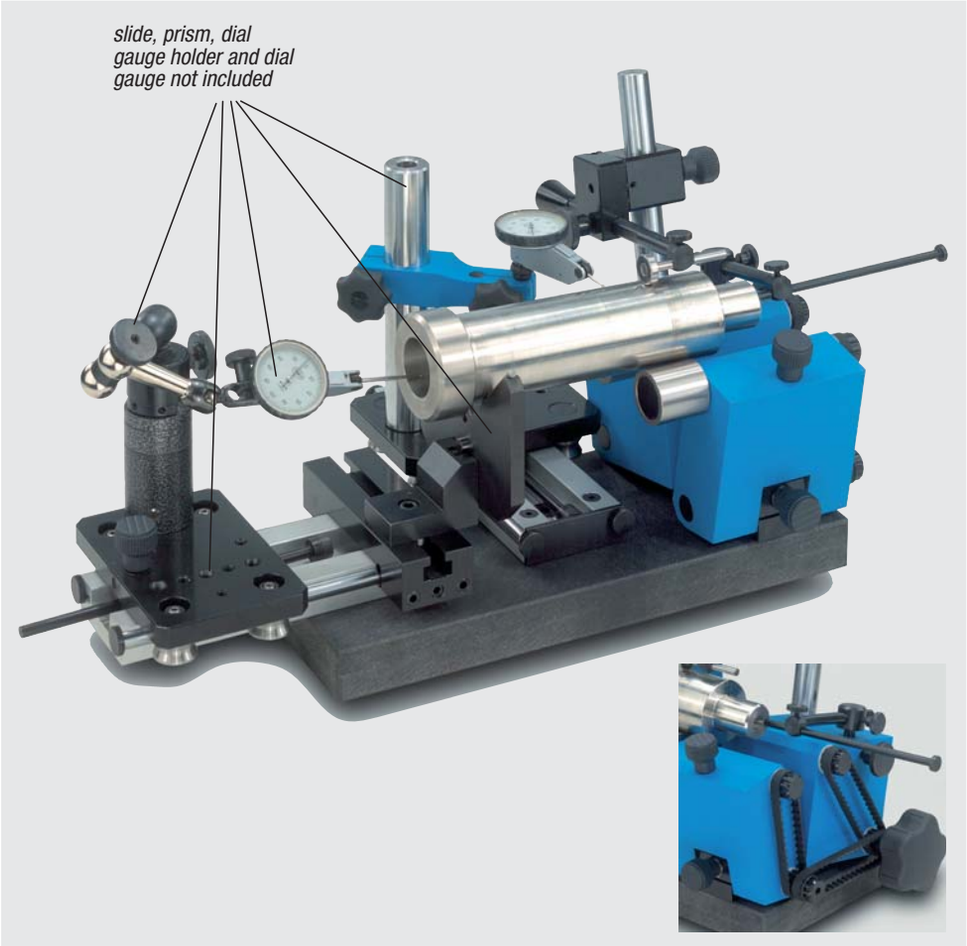

Order No.	Description
32506-01	Concentricity gauge

Accessories

for concentricity gauges

32501-02

32501-03

32501-04

32513-90

32513-98

32501-05

Order No.	Version
32501-02	additional carriage for concentricity gauge 32506
32501-03	dial gauge holder
32501-04	dial gauge holder
32513-90	prism for concentricity gauge 32501
32513-98	prism for concentricity gauge 32506
32501-05	thrust pin

Position of rollers

Note:
The test range can be extended to Ø 80 mm by positioning the rollers.
The teflon pin allows parts as small as Ø 0.5 mm to be checked.

teflon contact pin
instead of contact roller

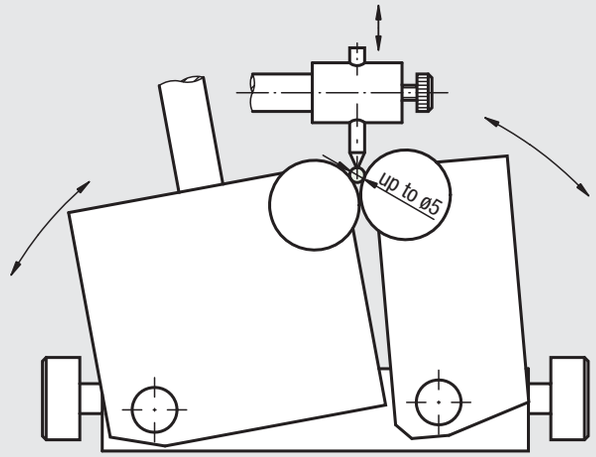

measuring rollers in closed
position

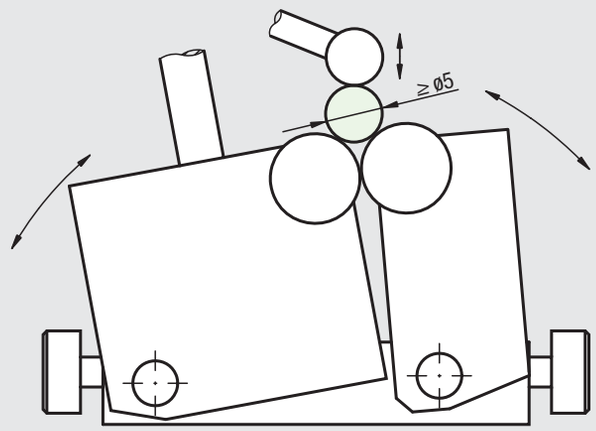

measuring rollers in opened
position

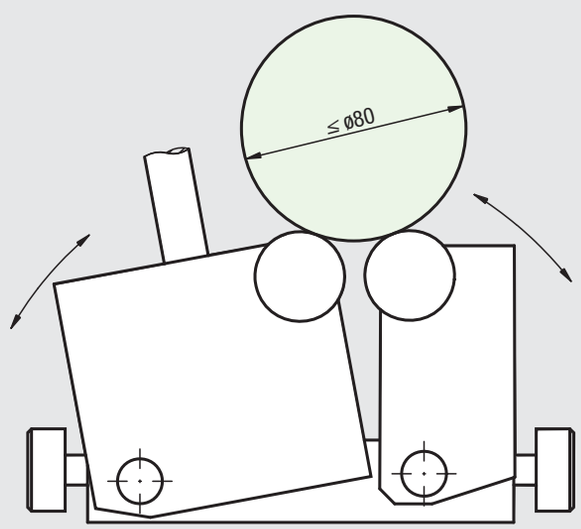

Applications

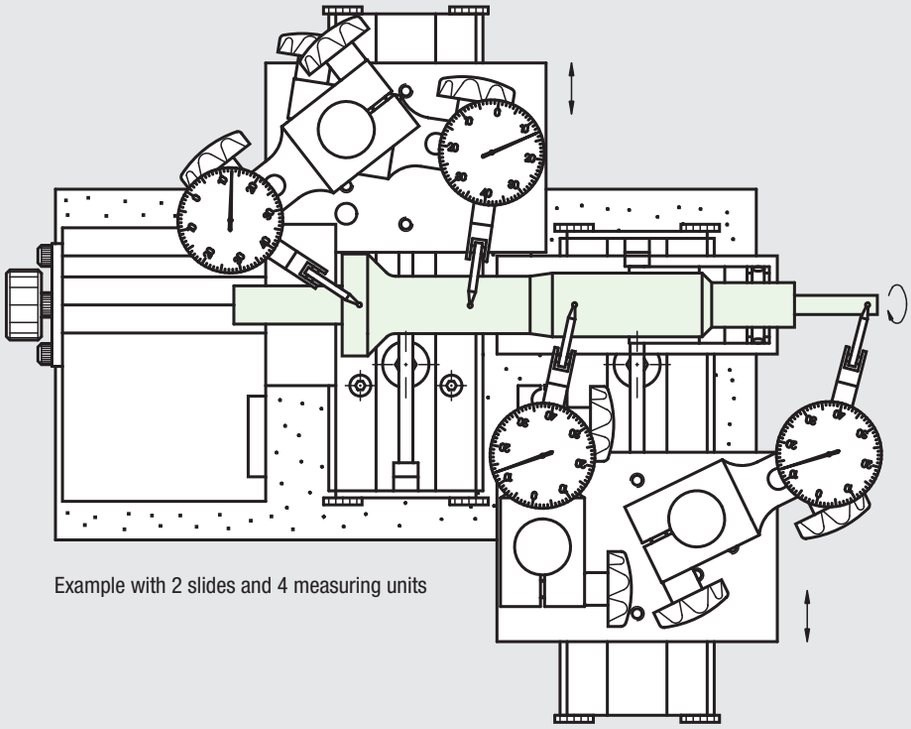

Example with 2 slides and 4 measuring units

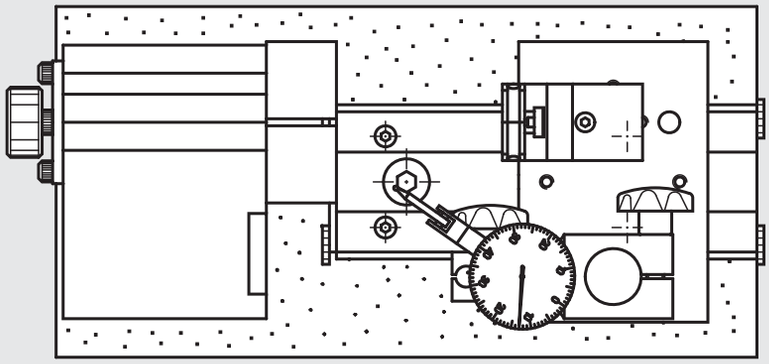

Example with support prism for long parts

Dial gauges

DIN 878

Material, version:
Robust metal housing, chromium-plated

Sample order:
nlm 32540-01

Note:
Standard clamping shank Ø 8h6
Measuring range 10 mm
Scale graduation 0.01 mm
Spindle travel 1 mm per revolution of large pointer
Housing Ø 58 mm
Rotation counter
Tolerance marks

Order No.	Version
32540-01	dial gauge
32540-012	dial gauge with calibration certificate

Dial gauges digital

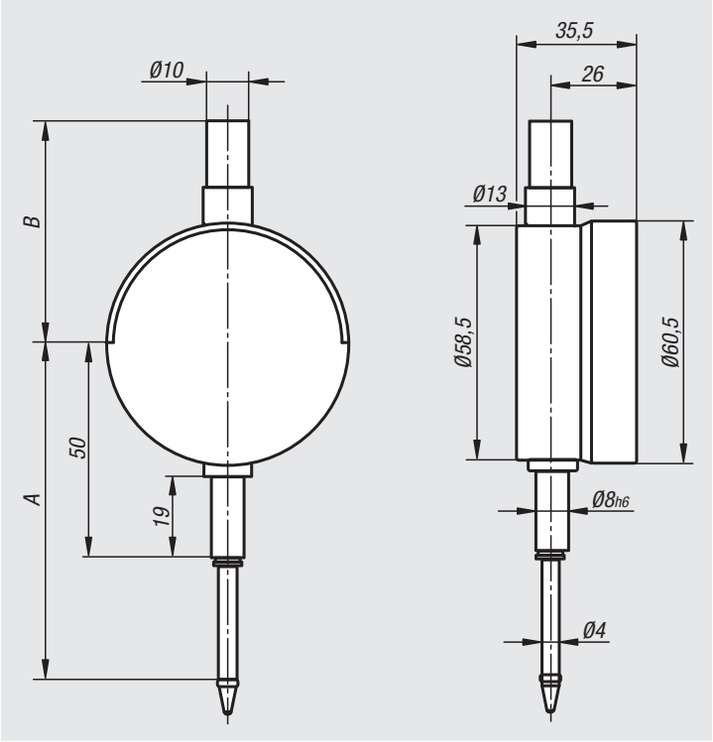

Material:
Housing aluminium.
Measuring spindle stainless steel.

Version:
Measuring spindle hardened and ground.

Sample order:
nlm 32542-04

Note:
Display rotatable by 270°
Standard holding shank Ø 8h6
Exchangeable probe
Thread M2.5
Protection class IP54

Function:
– Measures in mm or inch
– Preset

Switch-off electronics.
6 digit LCD display.
Extra large digits.
Digit height 8.5 mm.
Max. transverse speed 1.5 m/s.
interface Opto RS232C.
Battery life ca. 2000 hours.
Supplied with CR2032 battery.

Accessories:
Spare CR2032 battery
order No. 32510-20.

Order No.	Version	Type	A	B	Measuring range mm	Resolution mm	Precision mm	Repeat precision µm	Probe force N
32542-01	dial gauge	Preset	78,4	53,4	25	0,001	0,005	2 (±2s)	0,6 - 1,10
32542-02	dial gauge	Preset	78,4	53,4	25	0,01	0,010	2 (±2s)	0,6 - 1,10
32542-03	dial gauge	Preset	65,9	53,4	12,5	0,001	0,005	2 (±2s)	0,7 - 0,95
32542-04	dial gauge	Preset	65,9	53,4	12,5	0,001	0,004	2 (±2s)	0,65 - 0,9
32542-012	dial gauge with calibration certificate	Preset	78,4	53,4	25	0,001	0,005	2 (±2s)	0,6 - 1,10
32542-022	dial gauge with calibration certificate	Preset	78,4	53,4	25	0,01	0,010	2 (±2s)	0,6 - 1,10
32542-032	dial gauge with calibration certificate	Preset	65,9	53,4	12,5	0,001	0,005	2 (±2s)	0,7 - 0,95
32542-042	dial gauge with calibration certificate	Preset	65,9	53,4	12,5	0,01	0,010	2 (±2s)	0,7 - 0,95

33000

Standard inspection and test fixture elements

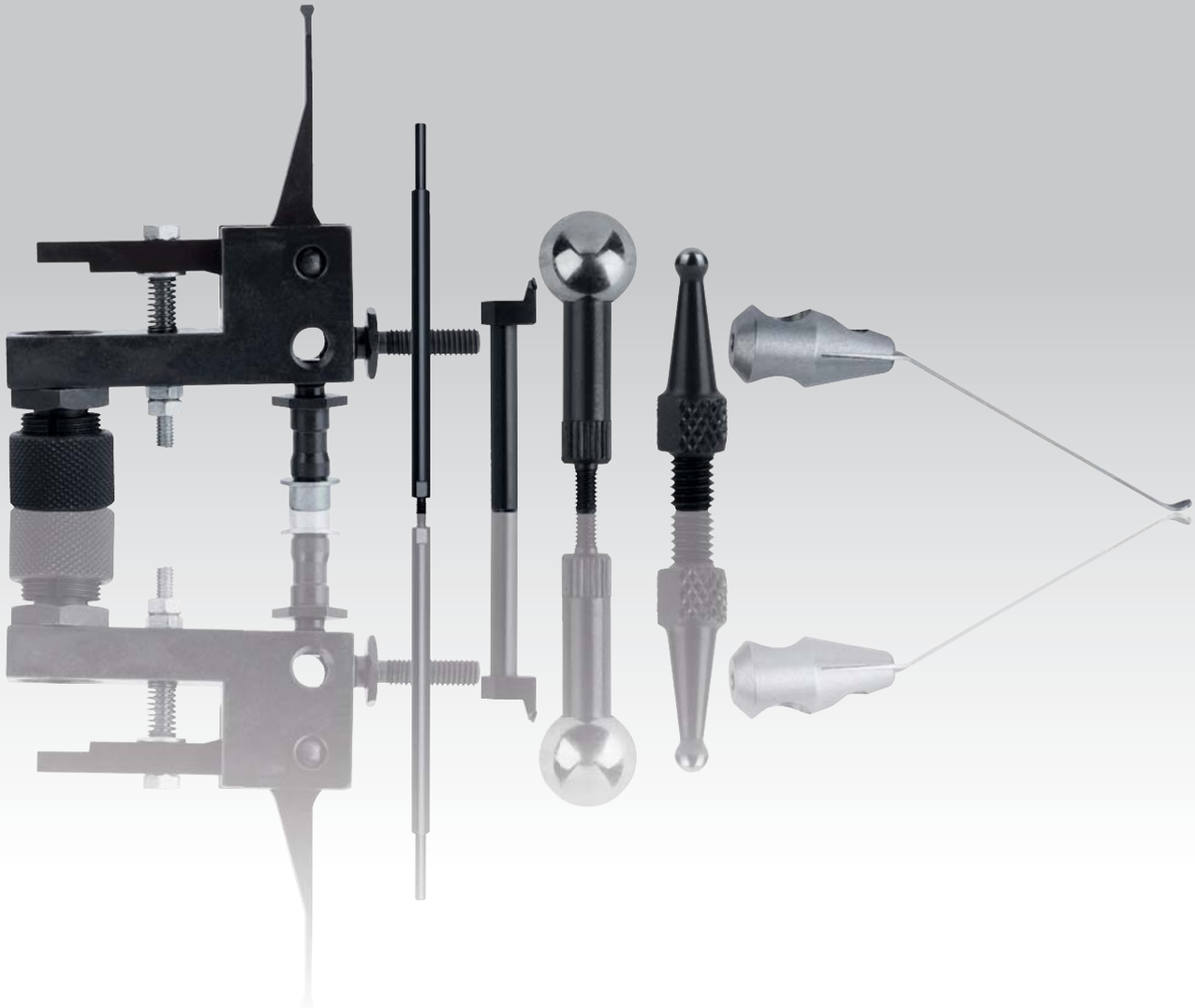

Dial gauge collets

for Ø8 shafts

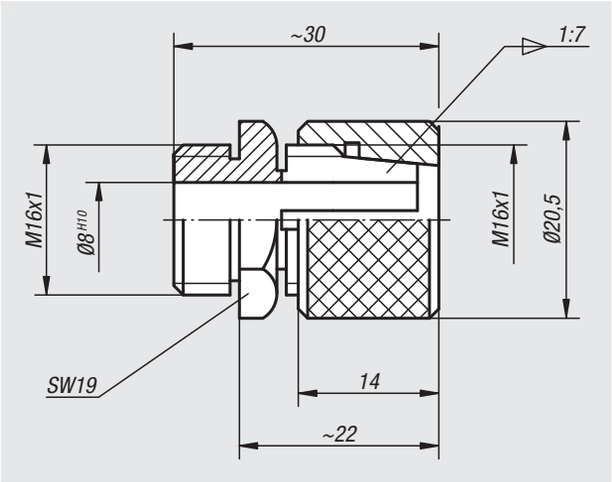

Material:
Carbon steel.

Version:
Black oxidised.
Collet tempered.

Sample order:
nlm 33000-08

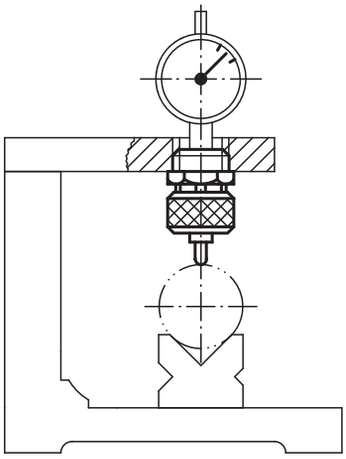

Order No.	Dimensions
33000-08	see drawing

33010

Dial gauge holders

sliding

Material:
Carbon steel.

Version:
Black oxidised.
Collet and body tempered.

Sample order:
nlm 33010-08025

Note:
Dial gauge and probe are not included.
Dial gauges see 32540 and 32542.
Probes see 33020 up to 33026.

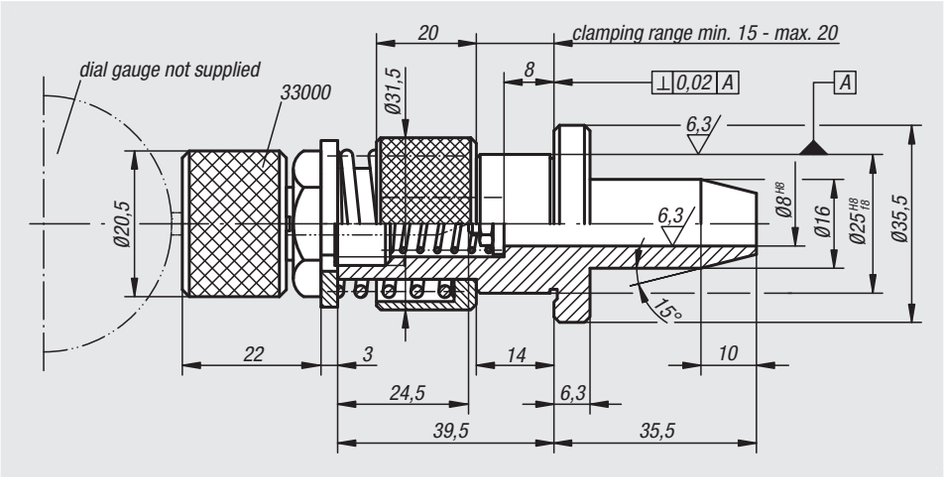

Order No.	Supplied for the probe pin
33010-08025	1 washer 5.3 x 14 x 1 1 hex nut M5 1 spring

33012

Dial gauge holders

short version with thread

Material:
Carbon steel.

Version:
Black oxidised.
Collet and body tempered.

Sample order:
nlm 33012-08050

Note:
Dial gauge and probe are not included.
Dial gauges see 32540 and 32542.
Probes see 33020 up to 33026.

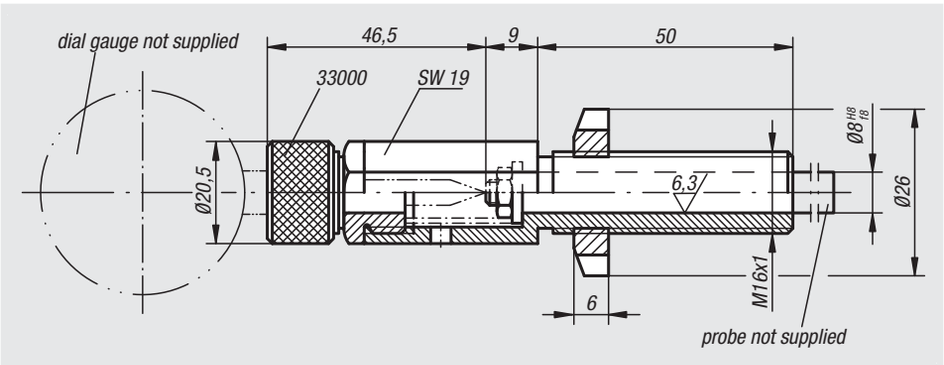

Order No.	Supplied for the probe pin
33012-08050	1 washer 5.3 x 14 x 1 1 hex nut M5 1 spring

33014

Dial gauge holders

long version with thread

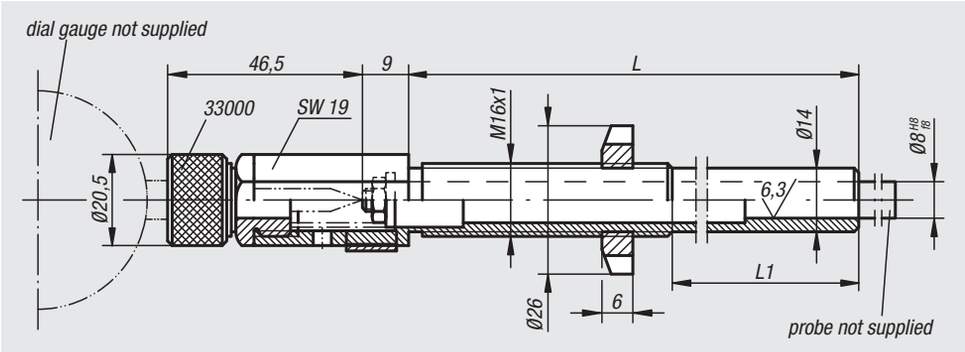

Material:
Carbon steel.

Version:
Black oxidised.
Collet and body tempered.

Sample order:
nlm 33014-08125

Note:
Dial gauge and probe are not included.
Dial gauges see 32540 and 32542.
Probes see 33020 up to 33026.

Order No.	L	L1	Supplied for the probe pin
33014-08125	125	75	1 washer 5.3 x 14 x 1 1 hex nut M5 1 spring
33014-08180	180	130	1 washer 5.3 x 14 x 1 1 hex nut M5 1 spring

33016

Dial gauge holders

short version with smooth shaft

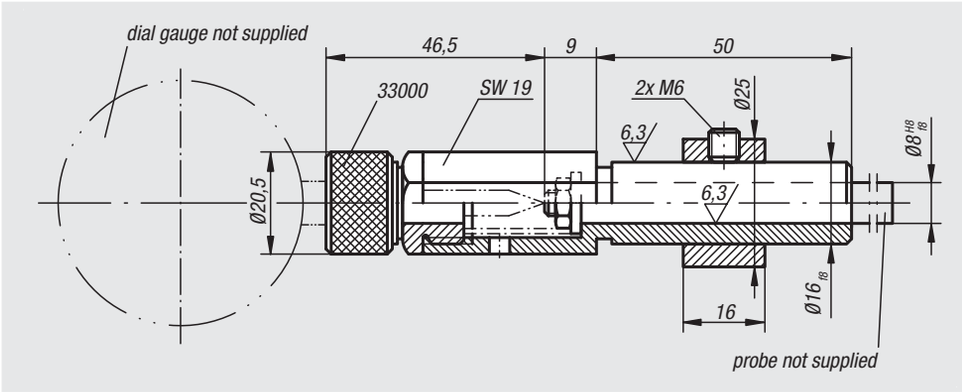

Material:
Carbon steel.

Version:
Black oxidised.
Collet and body tempered.

Sample order:
nlm 33016-08050

Note:
Dial gauge and probe are not included.
Dial gauges see 32540 and 32542.
Probes see 33020 up to 33026.

Order No.	Supplied for the probe pin
33016-08050	1 washer 5.3 x 14 x 1 1 hex nut M5 1 spring

Dial gauge holders

for measuring frame

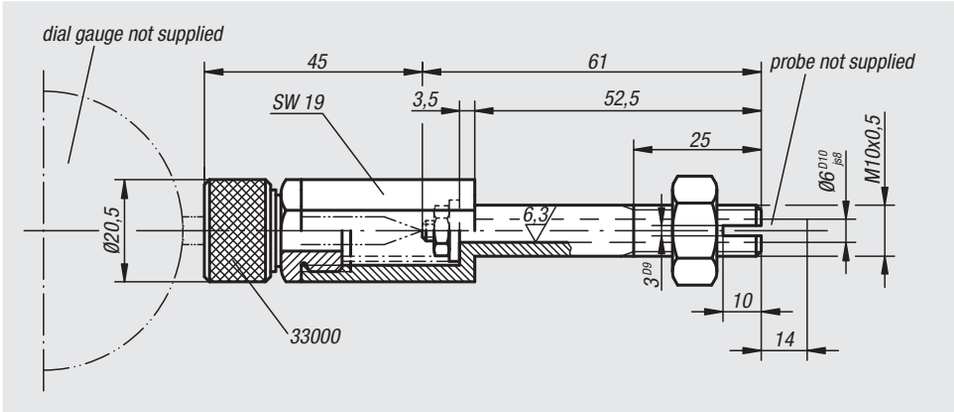

Material:
Carbon steel.

Version:
Black oxidised.
Collet and body tempered.

Sample order:
nlm 33018-06053

Note:
Dial gauges and probes are not included.
Dial gauges see 32540 and 32542.
Probes see 33028 up to 33032.

Order No.	Supplied for the probe pin
33018-06053	1 washer 4.3 x 14 x 0.9 1 hex nut M4 1 spring

Example of dial gauge holders

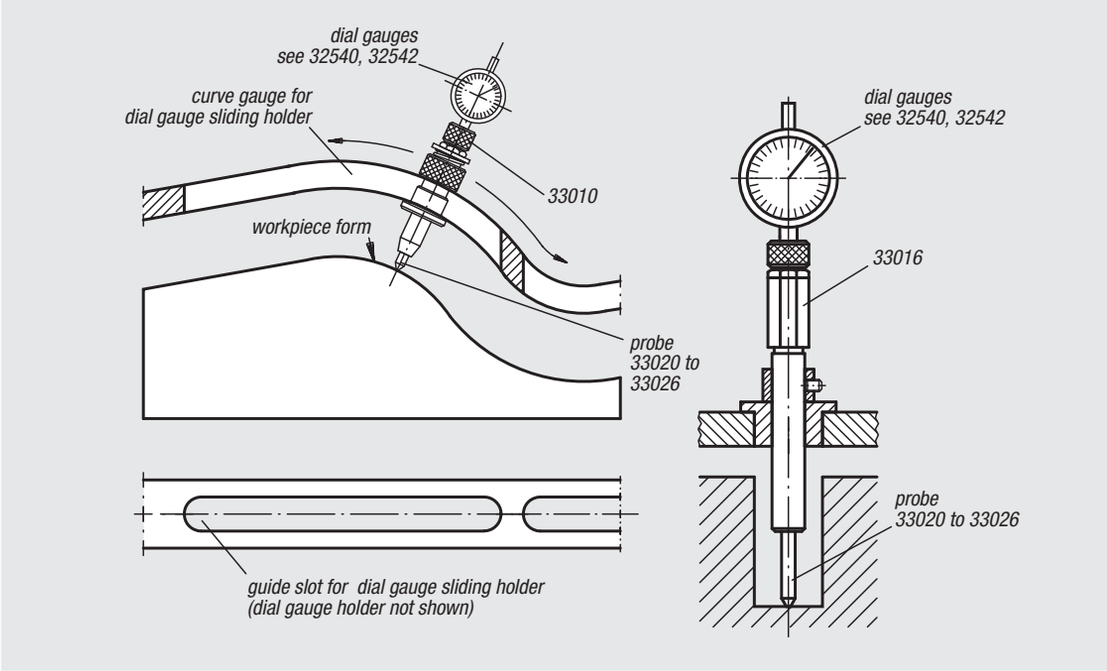

33020

Probe

with flat face

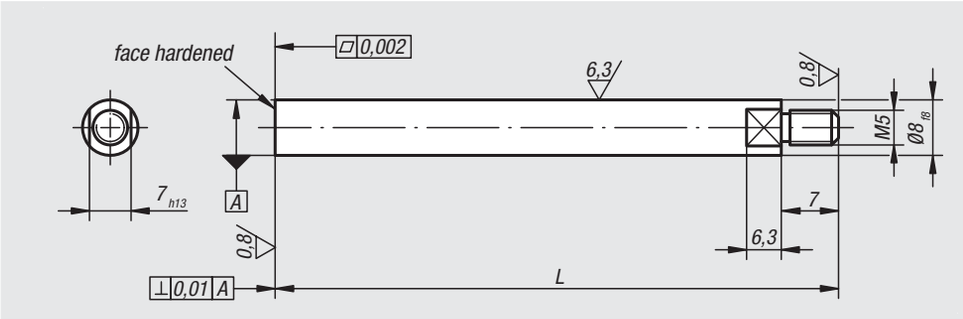

Material:
Steel.

Version:
Black oxidised.

Sample order:
nlm 33020-08100

Note:
These probes are suitable for dial gauge holders 33010 to 33016.

Order No.	L
33020-08063	63
33020-08080	80
33020-08100	100
33020-08160	160
33020-08250	250

33022

Probe

with flat point

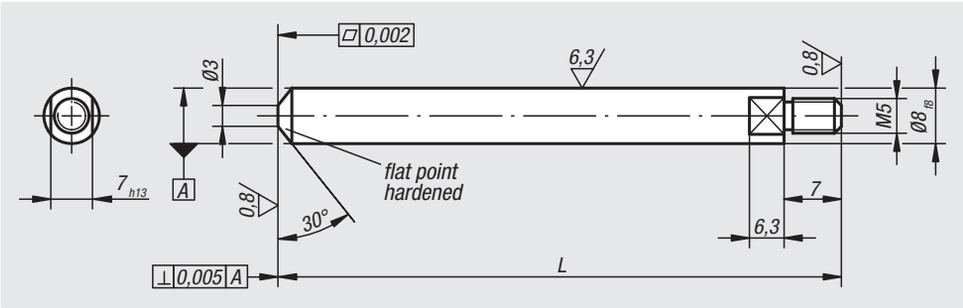

Material:
Steel.

Version:
Black oxidised.

Sample order:
nlm 33022-08063

Note:
These probes are suitable for dial gauge holders 33010 to 33016.

Order No.	L
33022-08063	63
33022-08080	80
33022-08100	100

33024

Probe

with reduced flat face

Material:
Steel.

Version:
Black oxidised.

Sample order:
nlm 33024-08160

Note:
These probes are suitable for dial gauge holders 33010 to 33016.

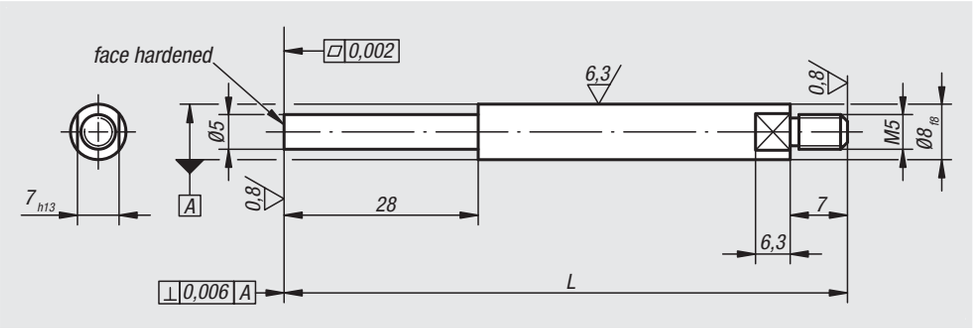

Order No.	L
33024-08080	80
33024-08100	100
33024-08160	160
33024-08250	250

33026

Probe

with reduced domed point

Material:
Steel.

Version:
Black oxidised.

Sample order:
nlm 33026-08080

Note:
These probes are suitable for dial gauge holders 33010 to 33016.

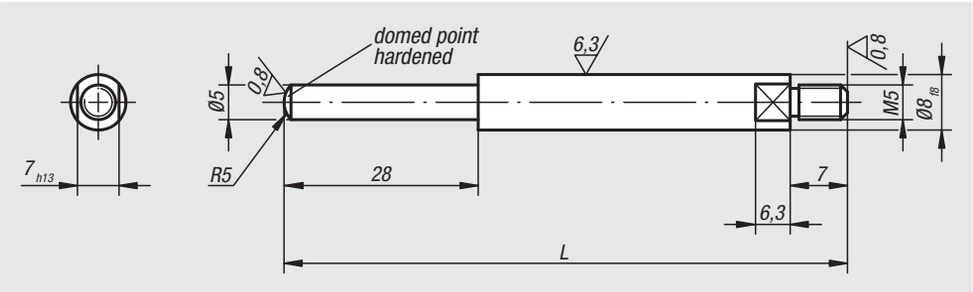

Order No.	L
33026-08080	80
33026-08100	100
33026-08160	160

33028

Probe knife point

Material:
Tool steel.
Contact face carbide

Version:
Black oxidised.

Sample order:
nlm 33028-06075

Note:
These probes are suitable for dial gauge holder 33018.

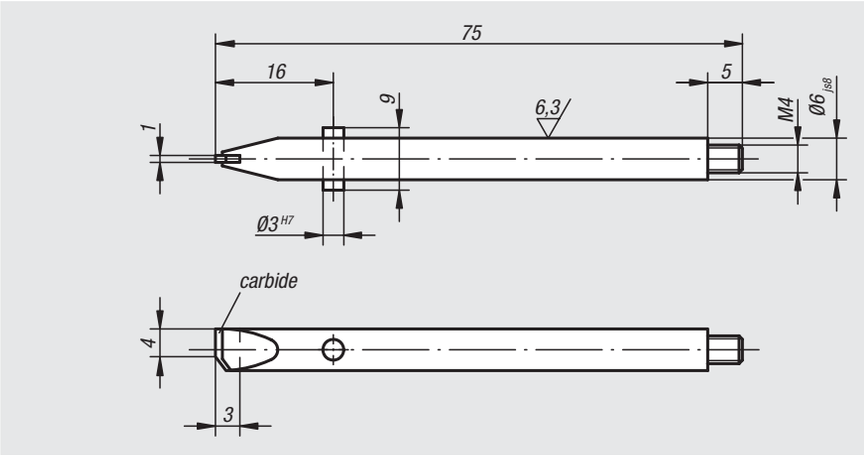

Order No.	Dimensions
33028-06075	see drawing

33029

Probe knife point

offset

Material:
Tool steel.
Contact face carbide

Version:
Black oxidised.

Sample order:
nlm 33029-06075

Note:
These probes are suitable for dial gauge holder 33018.

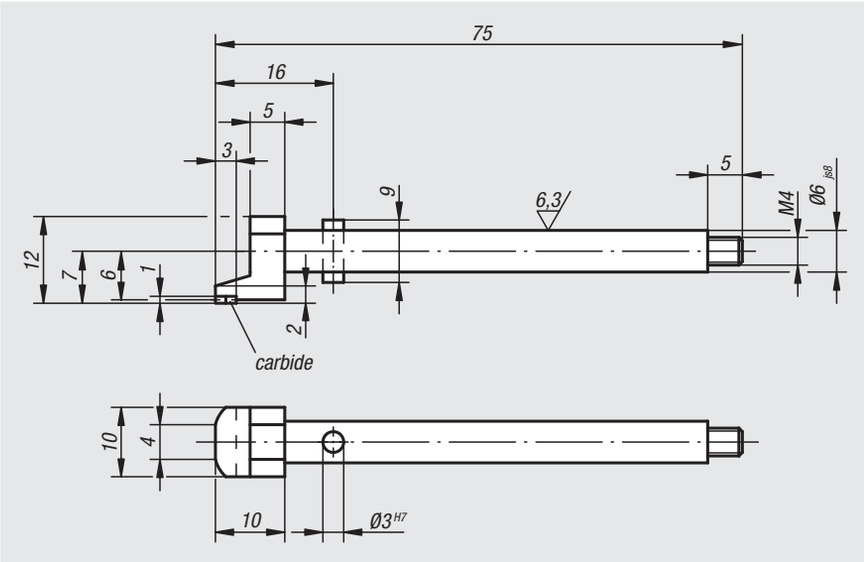

Order No.	Dimensions
33029-06075	see drawing

33032

Extension

for probe inserts

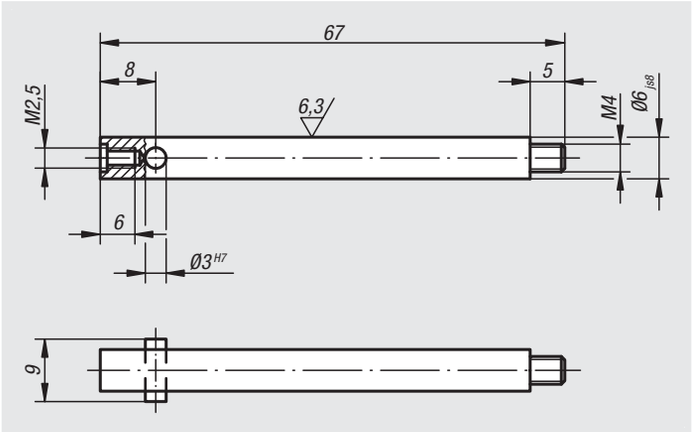

Material:
Tool steel.

Version:
Black oxidised.

Sample order:
nlm 33032-06067

Note:
These extension are suitable for dial gauge holder 33018.
For probe inserts see 33040 to 33052.

Order No.	Dimensions
33032-06067	see drawing

33035

Probe knife point

offset, for fixed stop

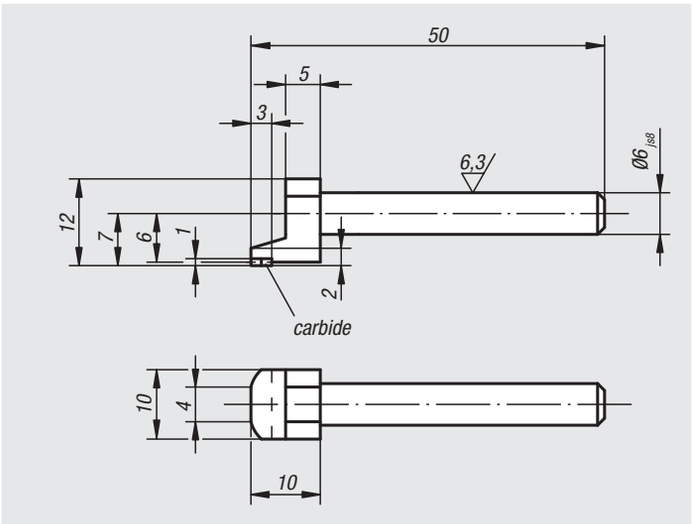

Material:
Tool steel.
Contact face carbide

Version:
Black oxidised.

Sample order:
nlm 33035-06050

Order No.	Dimensions
33035-06050	see drawing

33040

Probe inserts

with domed point

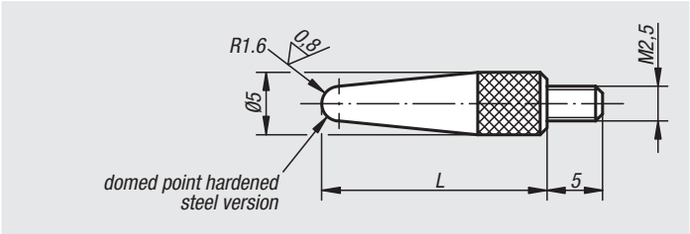

Material:
Steel or carbide point

Version:
Black oxidised.

Sample order:
nlm 33040-1025250

Note:
Dial gauges see 32540 and 32542.

Order No. steel	Order No. carbide	L
33040-1025080	33040-2025080	8
33040-1025125	33040-2025125	12,5
33040-1025160	33040-2025160	16
33040-1025200	33040-2025200	20
33040-1025250	33040-2025250	25
33040-1025280	33040-2025280	28
33040-1025355	33040-2025355	35,5

33042

Probe inserts

with ball point

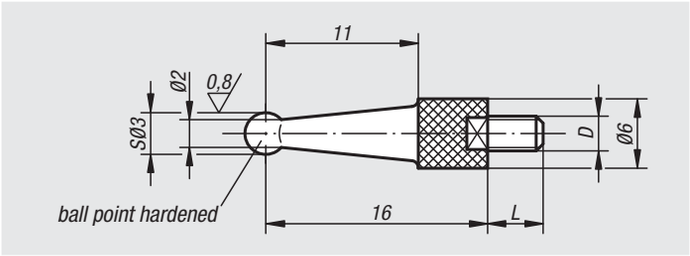

Material:
Tool steel.

Version:
Hardened, black oxidised.

Sample order:
nlm 33042-040016

Note:
Dial gauges see 32540 and 32542.

Order No.	D	L
33042-025016	M2,5	5
33042-040016	M4	5

33044

Probe inserts

knife point

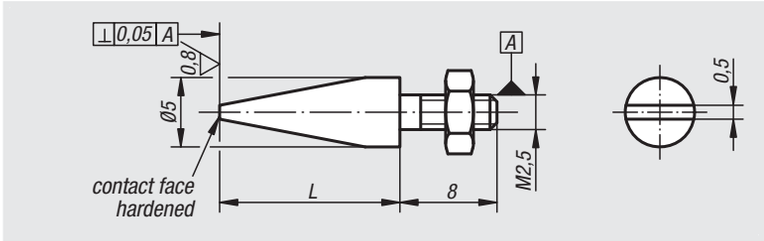

Material:
Steel.

Version:
Black oxidised.
Contact faces hardened.

Sample order:
nlm 33044-025080

Note:
Dial gauges see 32540 and 32542.

Order No.	L
33044-025080	8
33044-025125	12,5
33044-025160	16
33044-025200	20
33044-025280	28

33046

Probe inserts

with flat face

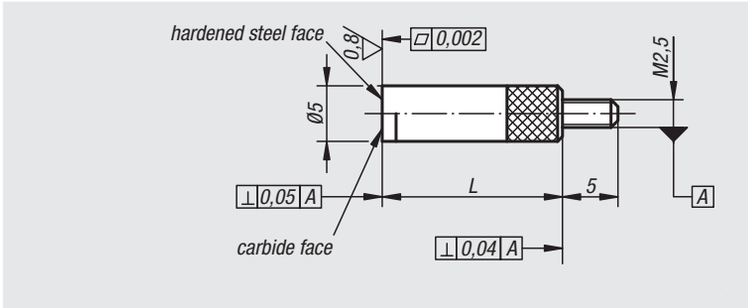

Material:
Steel or carbide contact face

Version:
Black oxidised.

Sample order:
nlm 33046-2025160

Note:
Dial gauges see 32540 and 32542.

Order No. steel	Order No. carbide	L
33046-1025080	33046-2025080	8
33046-1025125	33046-2025125	12,5
33046-1025160	33046-2025160	16

33048

Probe inserts

with domed face

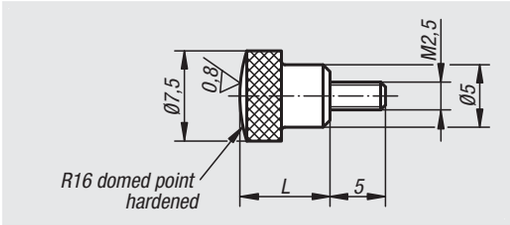

Material:
Steel.

Version:
Hardened, black oxidised.

Sample order:
nlm 33048-025080

Note:
Dial gauges see 32540 and 32542.

Order No.	L
33048-025080	8

33050

Probe inserts

with enlarged flat face

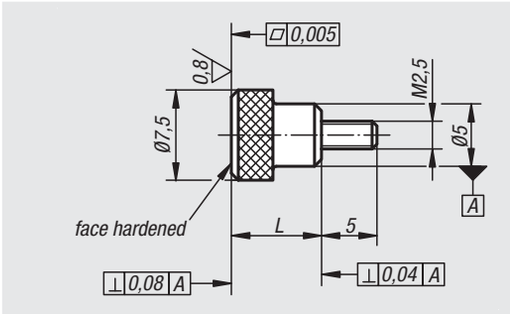

Material:
Steel.

Version:
Hardened, black oxidised.

Sample order:
nlm 33050-025080

Note:
Dial gauges see 32540 and 32542.

Order No.	L
33050-025080	8

33052

Extensions

for probe inserts

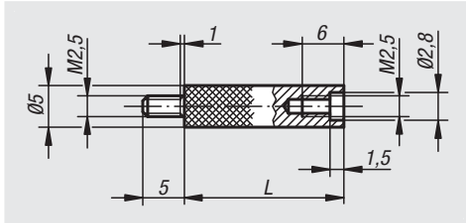

Material:
Steel.

Version:
Black oxidised.

Sample order:
nlm 33052-025120

Note:
Suitable for probe inserts 33040 to 33050 and probe insert set 33058.
Dial gauges see 32540 and 32542.

Order No.	L
33052-025080	8
33052-025100	10
33052-025120	12
33052-025160	16
33052-025200	20
33052-025240	24
33052-025300	30
33052-025320	32
33052-025400	40
33052-025500	50
33052-025600	60
33052-025700	70
33052-025800	80
33052-025900	90

33058

Probe insert set

11-piece

Material:
Probe inserts hardened steel.
Box plastic.

Version:
Black oxidised.

Sample order:
nlm 33058-01

Threaded version:
Thread M2.5
Contents:
9 inserts
1 extension (length 30 mm)
1 storage box

Order No.	Description	Version	Material
33058-01	Probe	11 piece	Steel

Probe inserts hardened steel

thread M2.5

Steel, hardened
flat Ø5

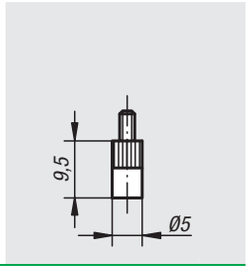

Order No.
33058-015

Steel, hardened
flat Ø7.5

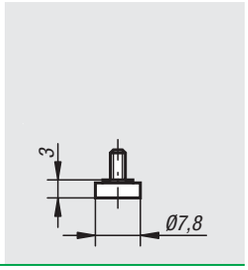

Order No.
33058-020

Steel, hardened
flat Ø15

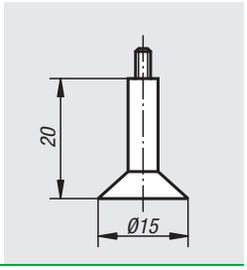

Order No.
33058-025

Steel, hardened
disc Ø15

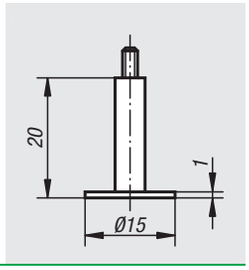

Order No.
33058-030

Steel, hardened
pin Ø1

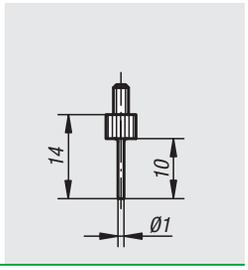

Order No.
33058-035

Steel, hardened
pin Ø2

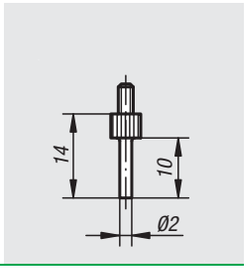

Order No.
33058-040

Steel, hardened
ball Ø2

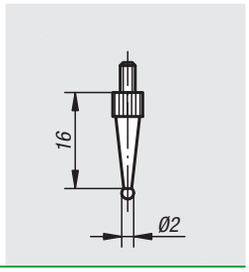

Order No.
33058-045

Steel, hardened
ball Ø5

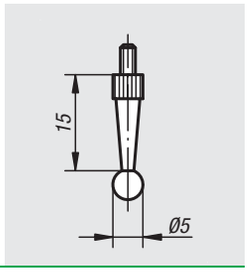

Order No.
33058-050

Steel, hardened
ball Ø10

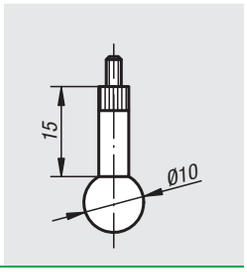

Order No.
33058-055

Steel, hardened
domed R12

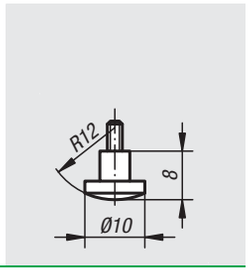

Order No.
33058-060

Steel, hardened
knife
angled 10°

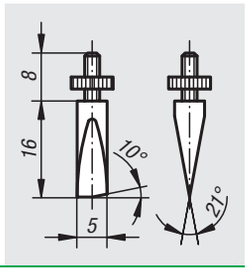

Order No.
33058-065

Steel, hardened
knife
laterally off-set

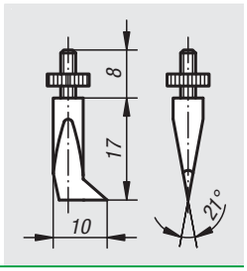

Order No.
33058-070

Steel, hardened
knife
one-sided

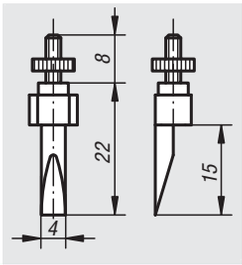

Order No.
33058-075

Steel, hardened
knife

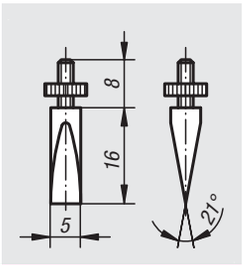

Order No.
33058-080

Steel, hardened
point 60°

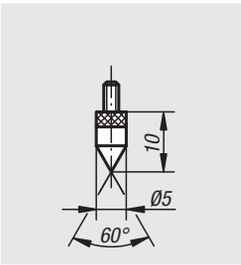

Order No.
33058-085

Steel, hardened
standard inch
ball Ø 1/8“

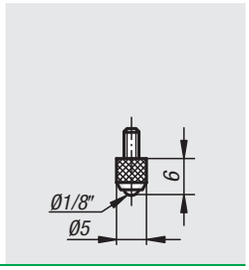

Order No.
33058-090

Probe inserts carbide

thread M2.5

Carbide
flat Ø5

Order No.
33058-515

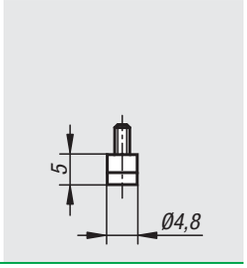

Carbide
domed R5

Order No.
33058-520

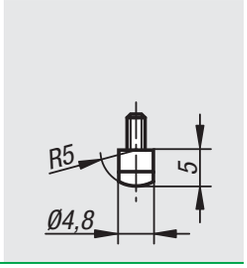

Carbide
flat Ø10

Order No.
33058-525

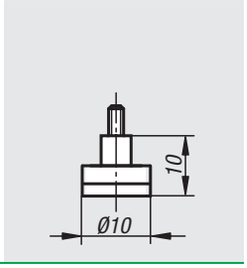

Carbidel
domed R10

Order No.
33058-530

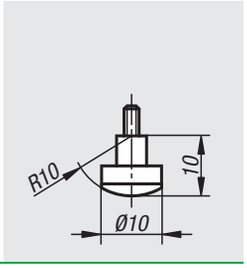

Carbide
blade 1x4

Order No.
33058-540

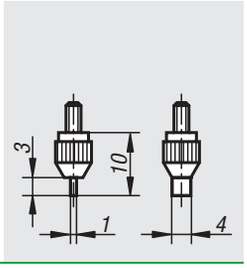

Carbide
knife 25°x4

Order No.
33058-545

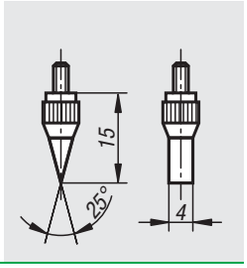

Carbide
pin Ø0,45

Order No.
33058-550

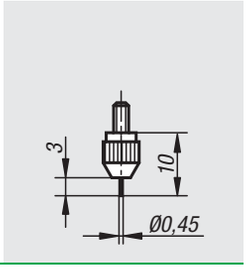

Carbide
pin Ø1.0

Order No.
33058-555

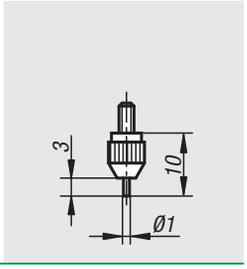

Carbide
pin Ø1.5

Order No.
33058-560

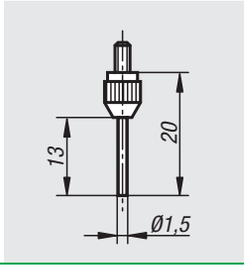

Carbide
flat Ø2

Order No.
33058-565

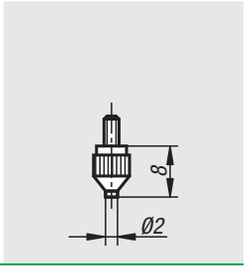

Carbide
point 90°x2

Order No.
33058-570

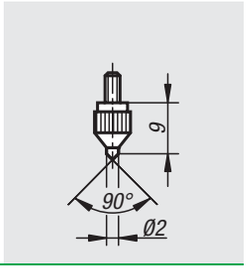

Carbide
standard inch
ball Ø1/8“

Order No.
33058-575

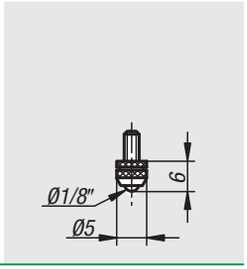

Protection frames

for dial gauges

Material:
Steel.

Version:
Painted yellow

Sample order:
nlm 33060-050086

Note:
Dial gauges see 32540 and 32542.
Dial gauge collets see 33000.
Dial gauge holders see 33010 to 33018.

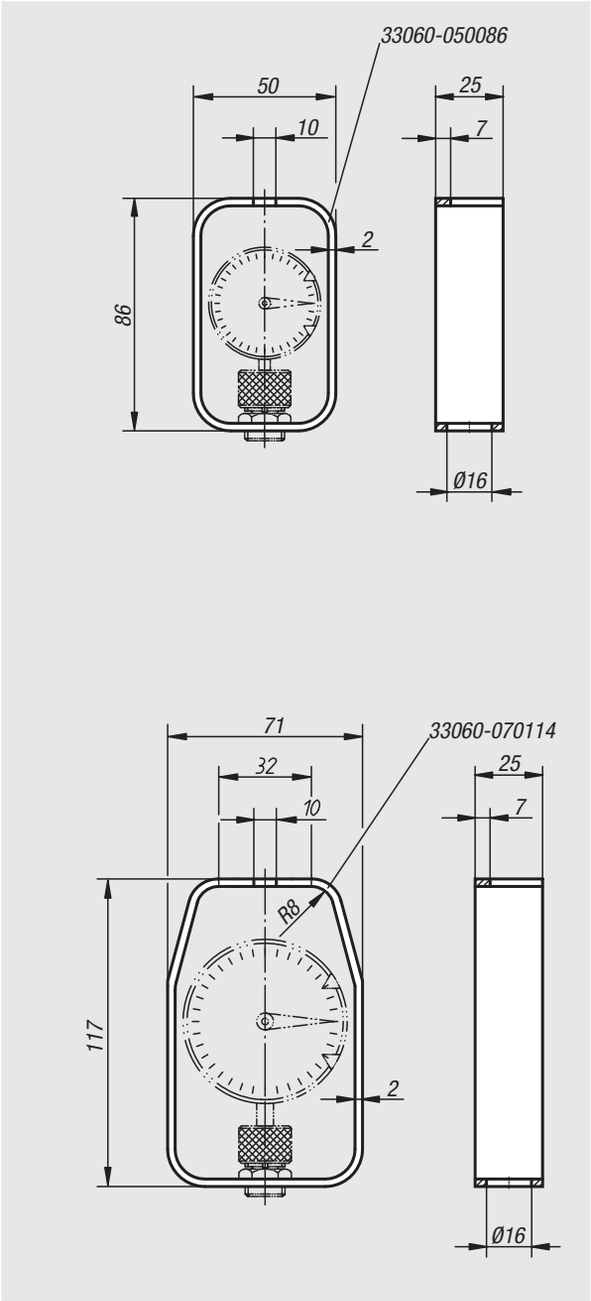

Order No.	Dimensions
33060-050086	see drawing
33060-070114	see drawing

Technical information for deflection dial gauge holders

For alternative mounting for the deflection dial gauge holder:
– mounting adapter M8/M6 (double thread)
– mounting adapter M8/Ø8
(thread and smooth pin)

Both adapters are supplied with each deflection dial gauge holder.

mounting adaptor M8/M6

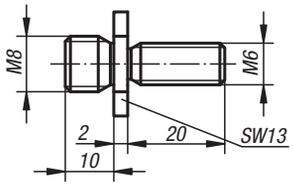

mounting adaptor M8/Ø8

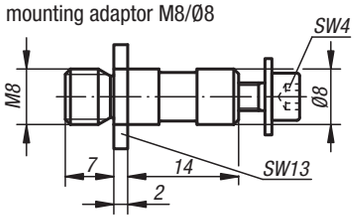

Modification of the probe direction:
the probe direction can be changed by simply moving the spring from inside to outside

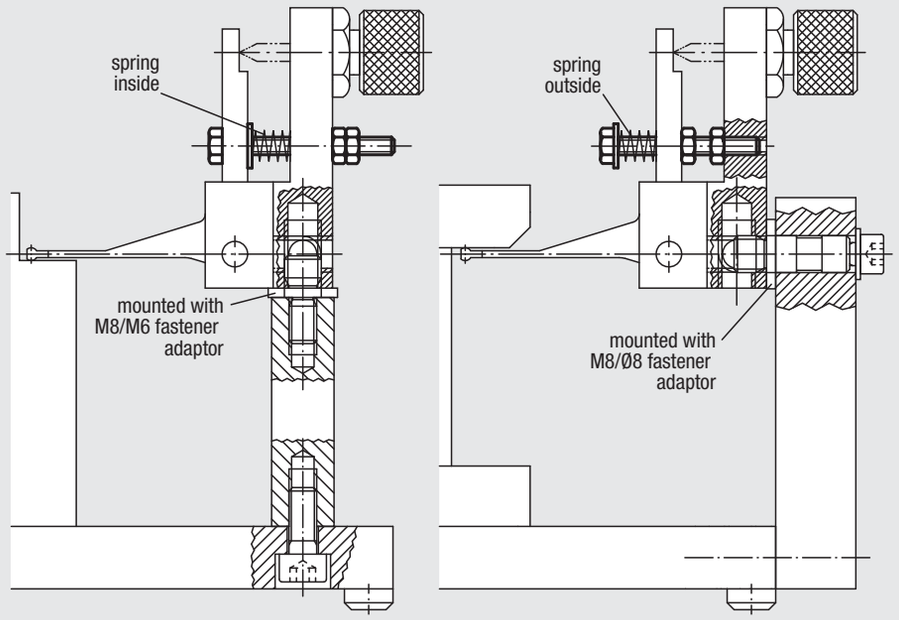

Example of simultaneous control of 4 height dimensions using deflection dial gauge holders

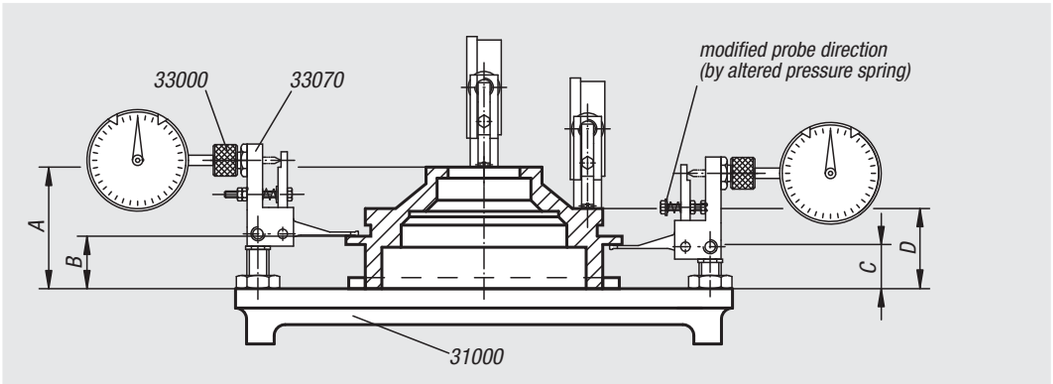

33070

Deflection dial gauge holders 90°

Material:
Steel.

Version:
Black oxidised.

Sample order:
nlm 33070-04803

Note:
To alter the probe direction and mounting of the deflection dial gauge holder with the fastening adaptors (supplied) see technical information.

Accessories:
Dial gauges see 32540 and 32542.

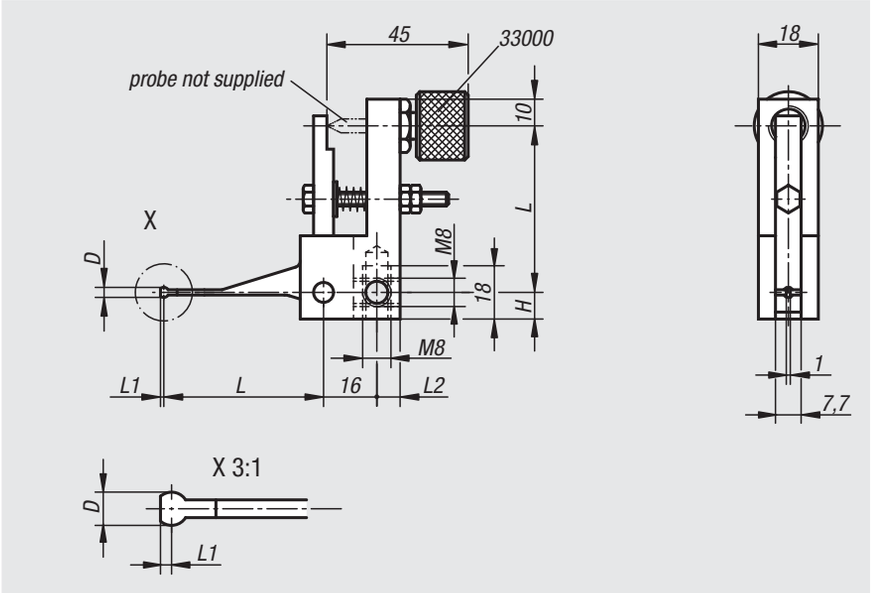

Order No.	L	D	L1	L2	H
33070-04803	48	3	1	7	8
33070-07008	70	8	1,5	6	10

33072

Deflection dial gauge holders 90°

probe lever with thread

Material:
Steel.

Version:
Black oxidised.

Sample order:
nlm 33072-048

Note:
To alter the probe direction and mounting of the deflection dial gauge holder with the fastening adaptors (supplied) see technical information.

Accessories:
Dial gauges see 32540 and 32542.
Probe inserts see 33042-040016.

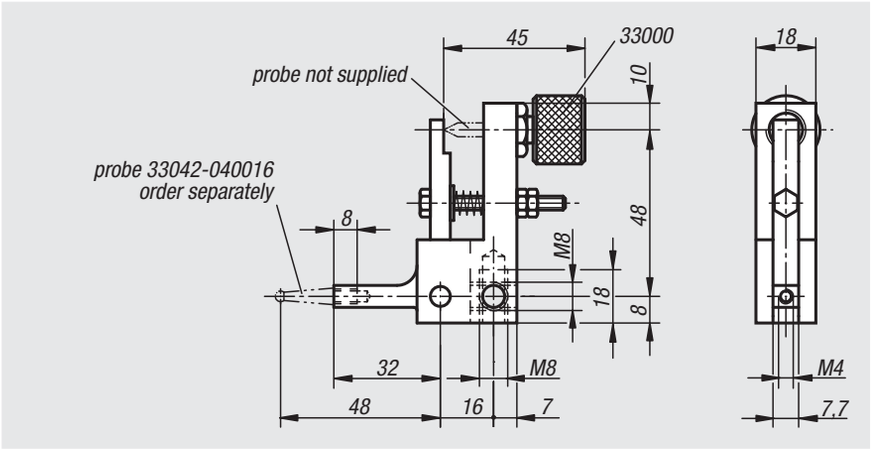

Order No.	Dimensions
33072-048	see drawing

33074

Deflection dial gauge holders 90°

probe lever with hole

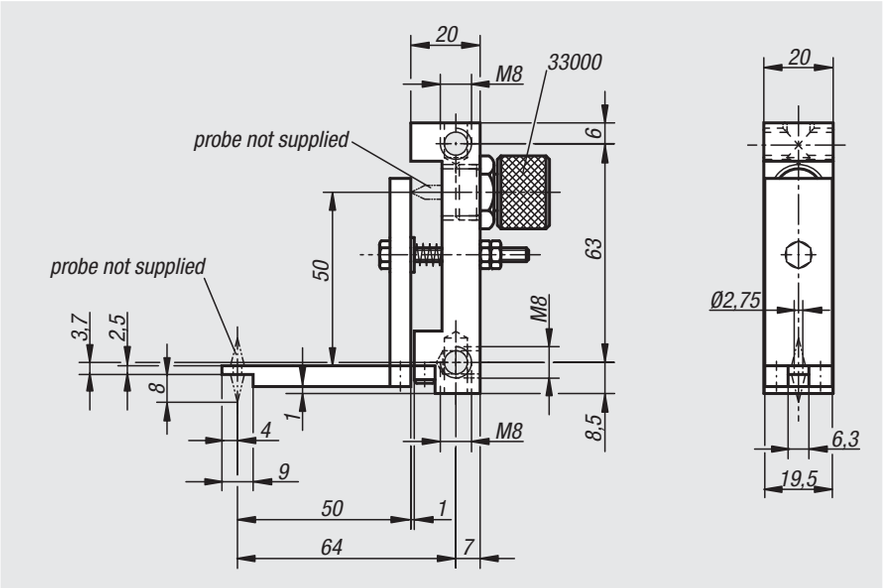

Material:
Body aluminium.
Probe lever investment cast steel.

Version:
Body black anodized.
Probe lever black oxidised.

Sample order:
nlm 33074-050

Note:
To alter the probe direction and mounting of the deflection dial gauge holder with the fastening adaptors (supplied) see technical information.

Accessories:
Dial gauges see 32540 and 32542.
Probe inserts see 33040 to 33052.

Order No.	Dimensions
33074-050	see drawing

33076

Deflection dial gauge holders 180°

probe lever with hole

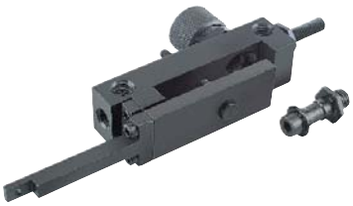

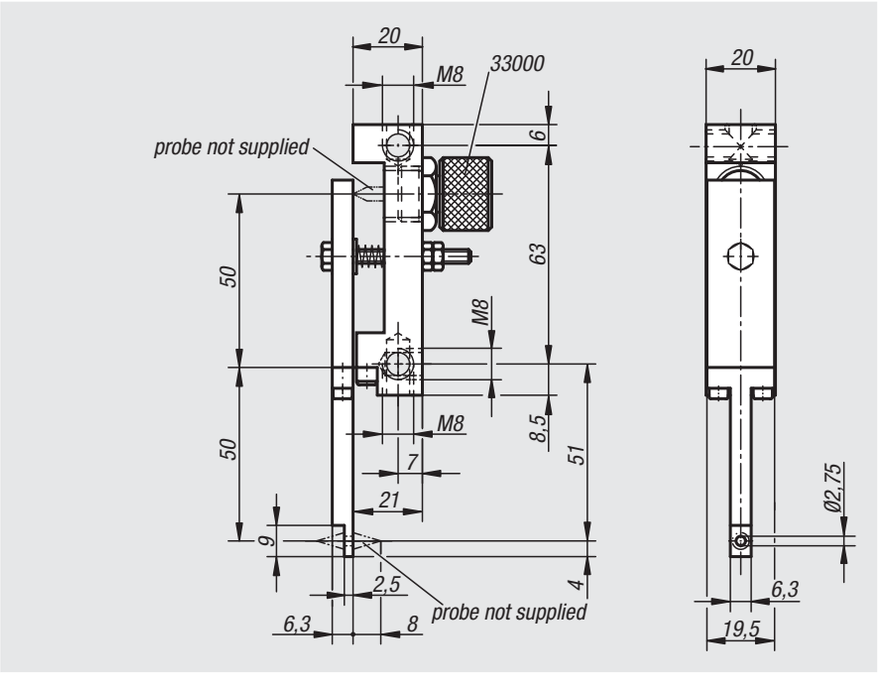

Material:
Body aluminium.
Probe lever investment cast steel.

Version:
Body black anodized.
Probe lever black oxidised.

Sample order:
nlm 33076-050

Note:
To alter the probe direction and mounting of the deflection dial gauge holder with the fastening adaptors (supplied) see technical information.

Accessories:
Dial gauges see 32540 and 32542.
Probe inserts see 33040 to 33052.

Order No.	Dimensions
33076-050	see drawing

33078

Deflection dial gauge holders 90°

probe lever with thread

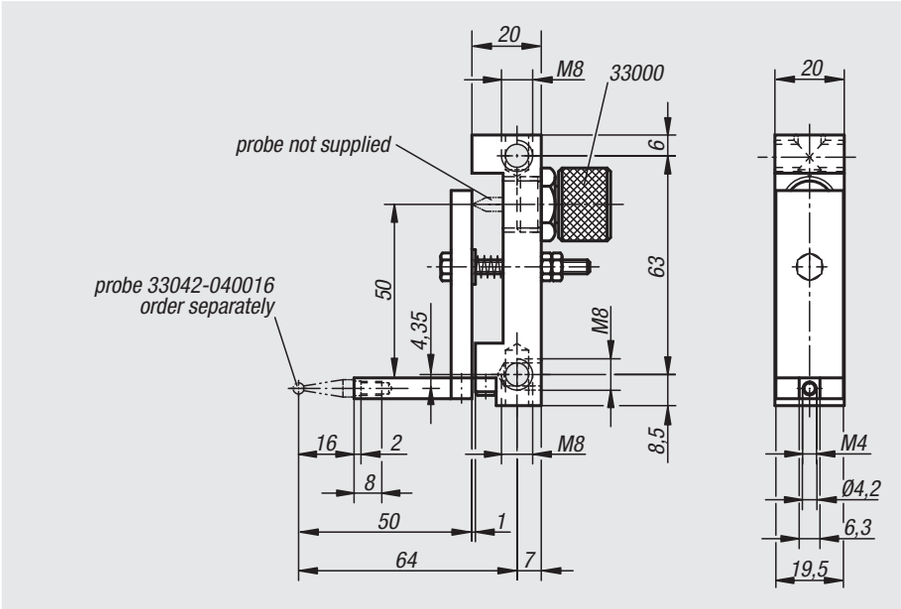

Material:
Body aluminium.
Probe lever investment cast steel.

Version:
Body black anodized.
Probe lever black oxidised.

Sample order:
nlm 33078-050

Note:
To alter the probe direction and mounting of the deflection dial gauge holder with the fastening adaptors (supplied) see technical information.

Accessories:
Dial gauges see 32540 and 32542.
Probe inserts see 33042-040016.

Order No.	Dimensions
33078-050	see drawing

33080

Deflection dial gauge holders 180°

probe lever with thread

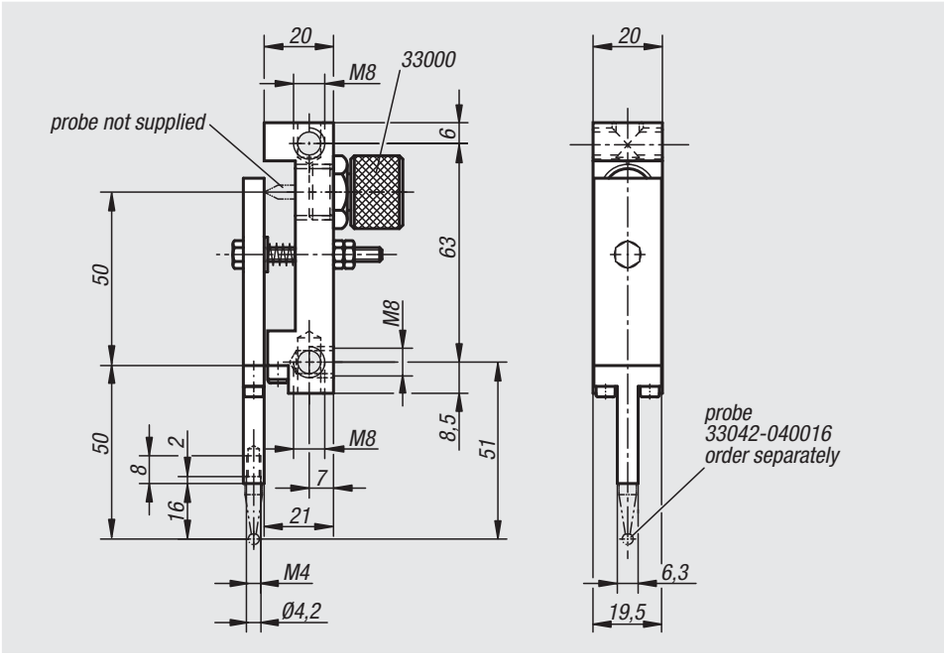

Material:
Body aluminium.
Probe lever investment cast steel.

Version:
Body black anodized.
Probe lever black oxidised.

Sample order:
nlm 33080-050

Note:
To alter the probe direction and mounting of the deflection dial gauge holder with the fastening adaptors (supplied) see technical information.

Accessories:
Dial gauges see 32540 and 32542.
Probe inserts see 33042-040016.

Order No.	Dimensions
33080-050	see drawing

33090

Prism attachments

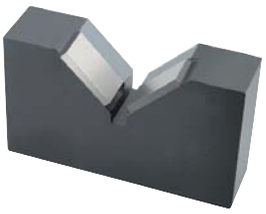

Material:
Carbon steel.
Contact face carbide.

Version:
Black oxidised.
Contact faces ground, bright.

Sample order:
nlm 33090-010020

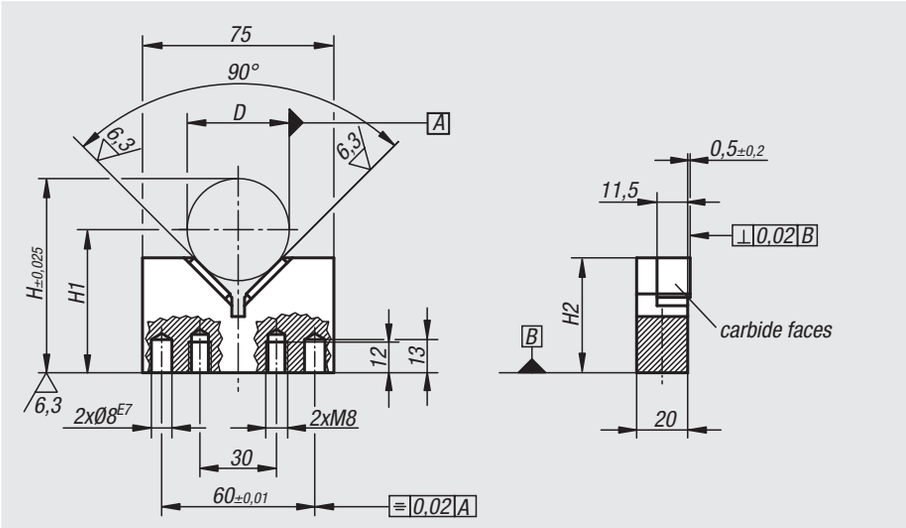

Order No.	D min.	D max.	D Test-Ø	H	H1	H2
33090-010020	10	20	20	66	D/2 x √2 + 41,857	53
33090-020040	20	40	40	76	D/2 x √2 + 27,716	45

33092

Spacers

for prisms attachments

Material:
Carbon steel.

Version:
Black oxidised.

Sample order:
nlm 33092-012

Note:
These spacers are used as riser elements for prisms attachments 33090.

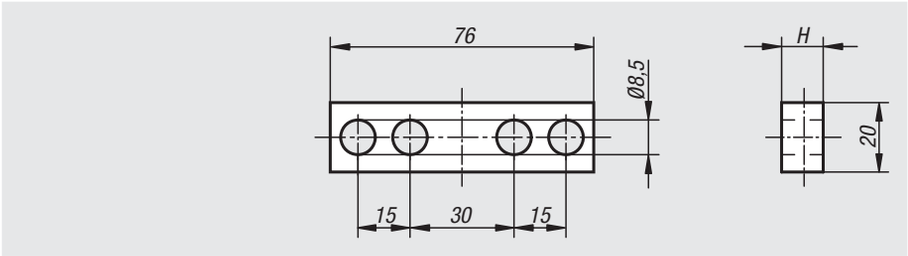

Order No.	H
33092-005	5
33092-008	8
33092-012	12
33092-015	15
33092-020	20

Slotted round nuts

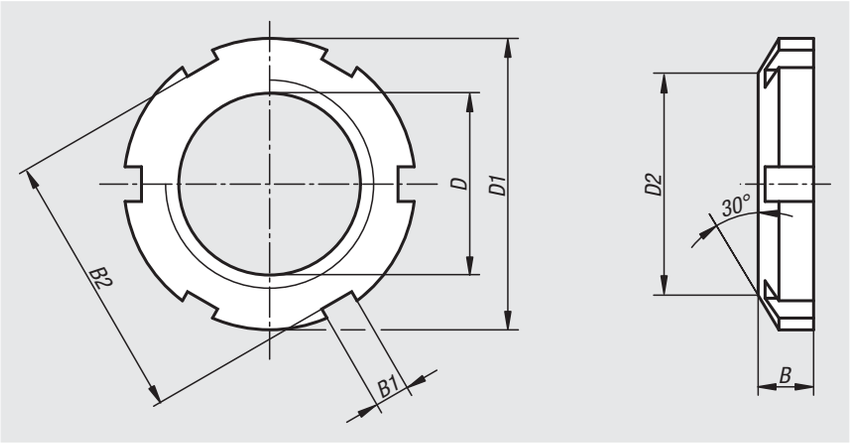

Material:
Carbon steel.

Version:
Black oxidised.

Sample order:
nlm 33105-16

Order No.	D	D1	D2	B	B1	B2	Number of slots
33105-16	M16x1	26	21	6	4	22	4
33105-36	M36x1,5	52	44	9	6	46	6

Pivoting columns

Material:
Steel.

Version:
Black oxidised.

Sample order:
nlm 33110-200

Note:
Dial gauges see 32540 and 32542.
Measuring arms see 33150.

Application:
For height measurements.

Assembly:
- Fully dismantle the pivoting column.
- Fasten guide column to the table with washer and cap screw.
- Slide the conical clamping ring on the column and press down while tightening the screw.
- Slide the conical pivoting sleeve on.
- Fasten the measuring arm onto the conical pivoting sleeve.
- Fasten the conical centring ring onto the conical pivoting sleeve with two grub screws.
- Insert the dowel pin into the guide column.
- Slide the conical ring onto the guide column so that the dowel pin engages in the slot. Ensure the conical ring has no play.
- Mount the spring on the top with the clamping ring to prevent axial play.
- Lubricate all moving parts.

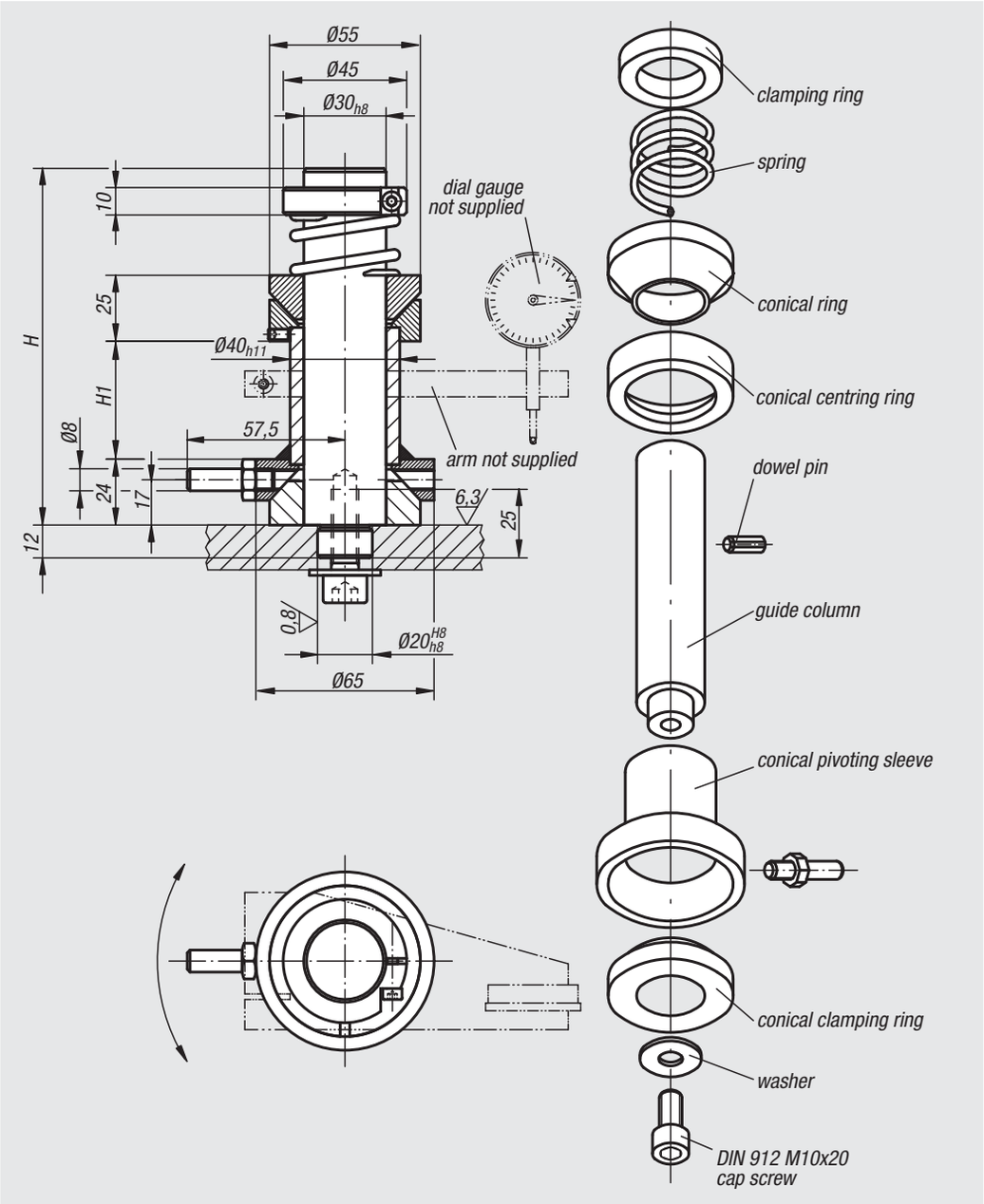

Order No.	H	H1
33110-130	130	43
33110-160	160	73
33110-200	200	113
33110-250	250	163

Pivoting systems

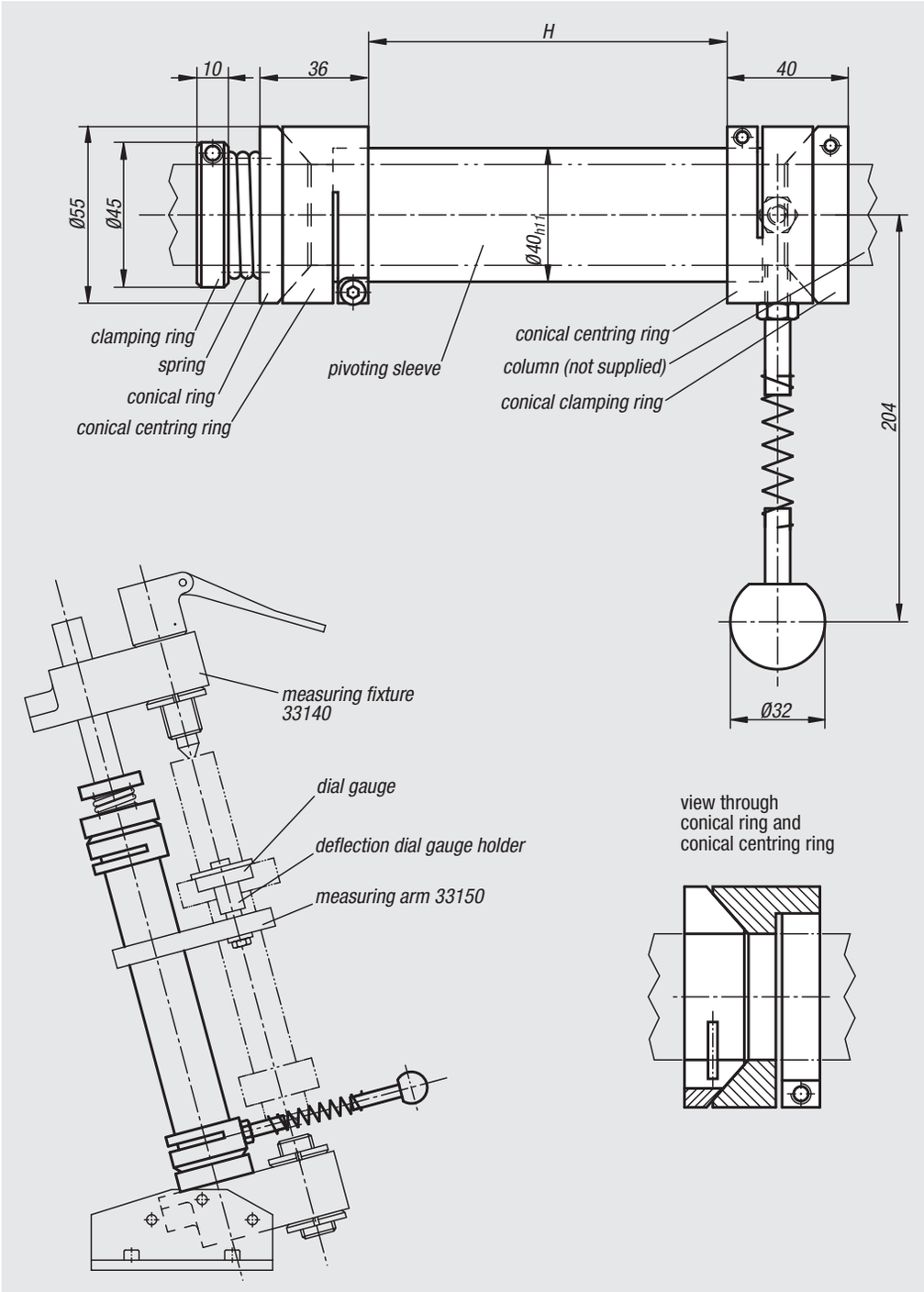

Material:
Steel.

Version:
Black oxidised.

Sample order:
nlm 33115-426

Note:
The pivoting systems are adapted to measuring fixtures 33140.
Measuring arms see 33150.

Assembly:
- Place the conical clamping ring on the guide column and clamp in the desired position.
- Fix the conical centring ring to the pivoting sleeve and insert it such that the conical centring ring lies on top of the conical clamping ring.
- Fix the measuring arm onto the pivoting sleeve.
- Fix the second conical centring ring onto the pivoting sleeve.
- Insert the conical ring and pressure spring.
- Mount the pressure spring on the block with the clamping ring to prevent axial play.
- Lubricate all moving parts.

Order No.	H
33115-200	200
33115-276	276
33115-426	426
33115-536	536

Measuring fixtures

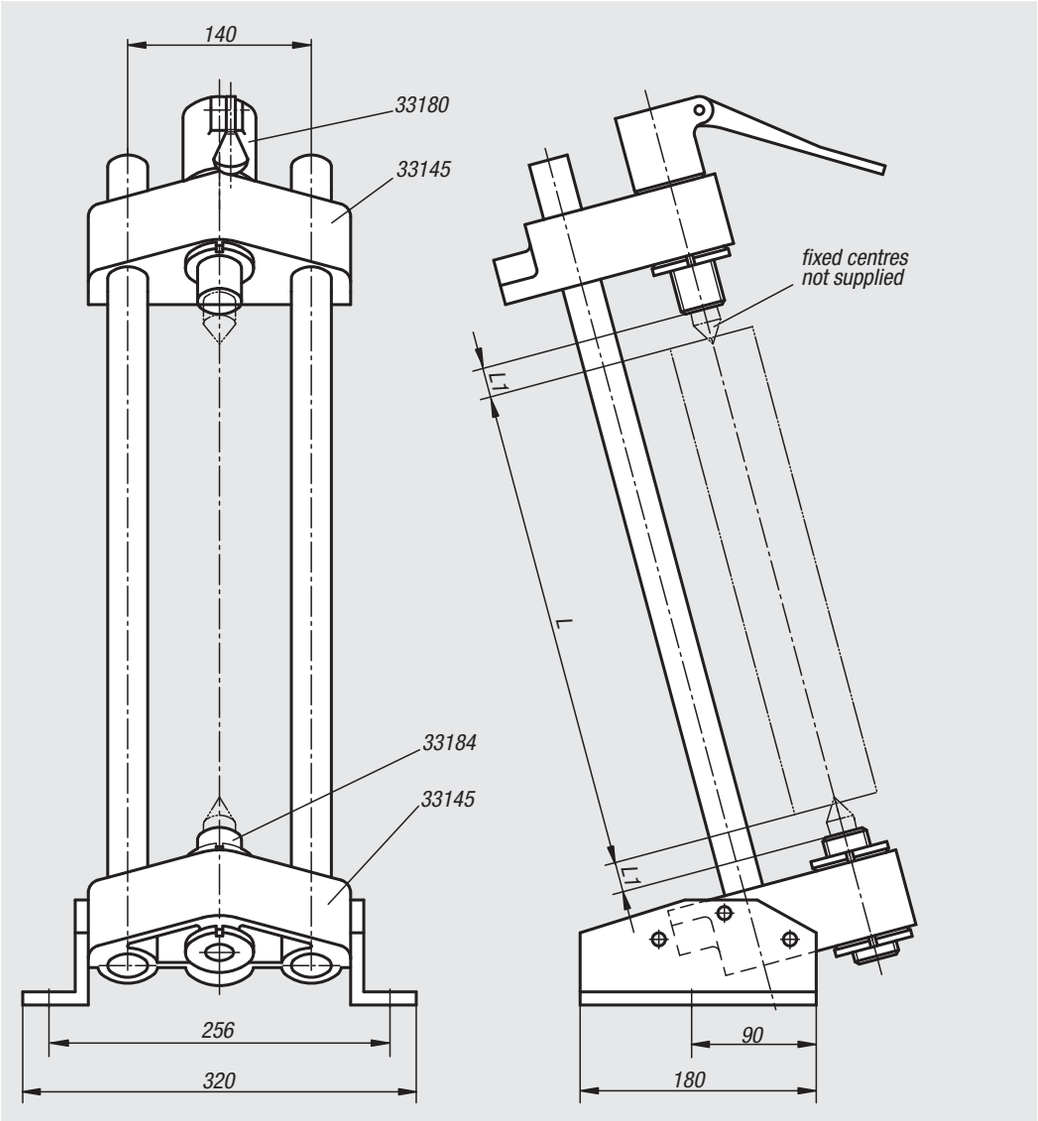

Material:
Steel.
Shaft bearing GJL 200

Version:
Steel parts black oxidised.
Shaft bearing painted.

Sample order:
nlm 33140-240444

Note:
See example of a measuring fixture.

Order No.	L when L1 = 32 with fixed centre 33190-02096	L when L1 = 49 with fixed centre 33190-02113
33140-240444	274 to 444	240 to 410
33140-410524	444 to 524	410 to 490

Example of a measuring fixture

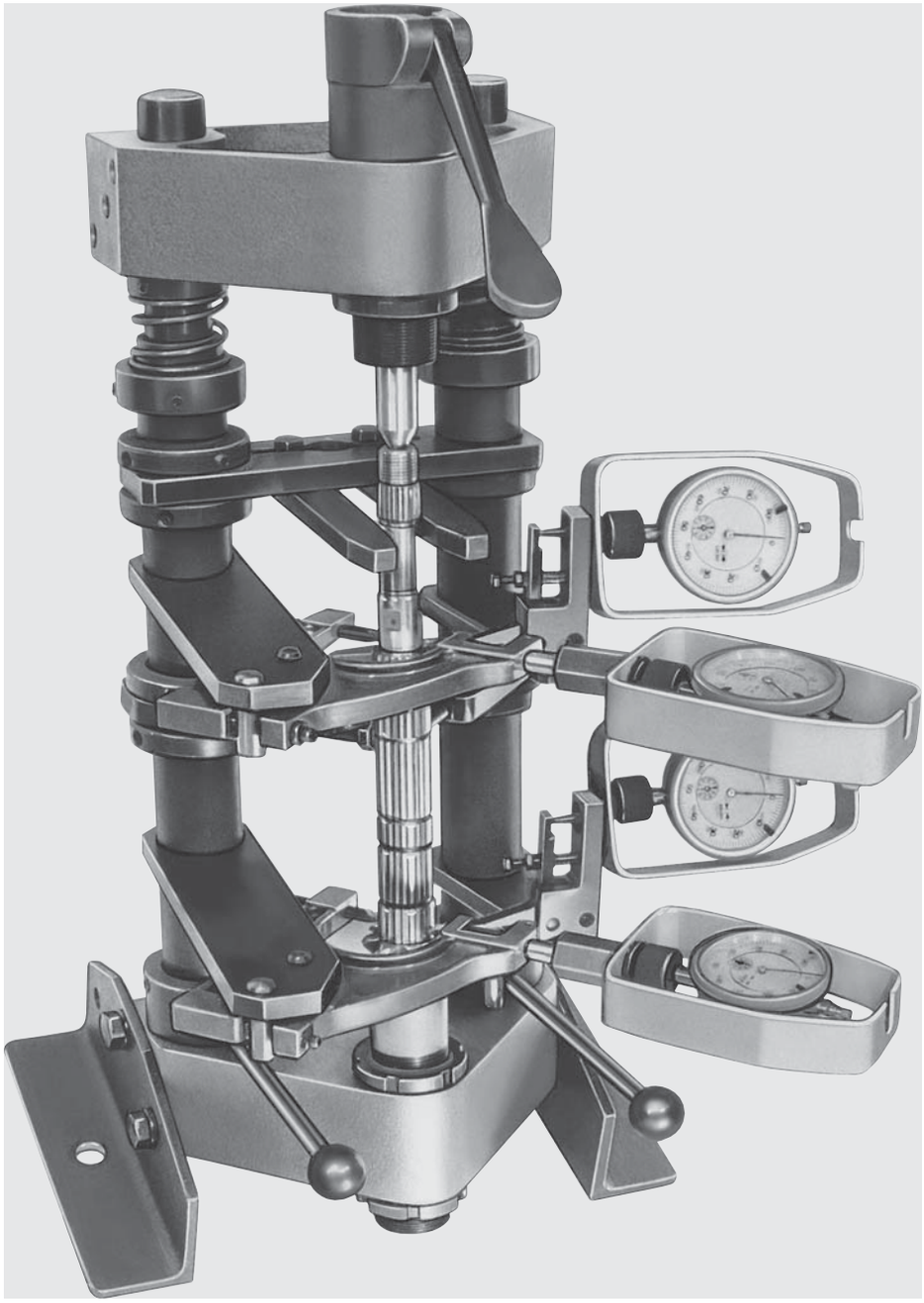

Measuring arms

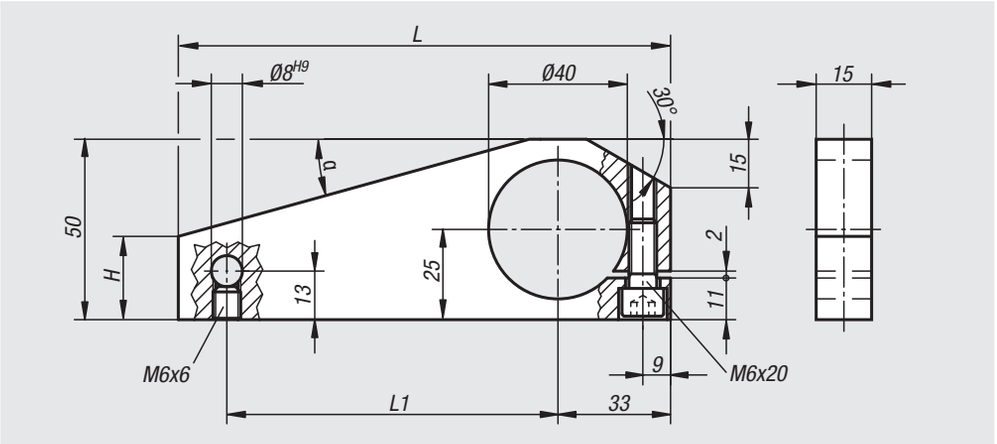

Material:
Steel.

Version:
Black oxidised.

Sample order:
nlm 33150-095

Note:
The measuring arms are suitable for pivoting columns 33110 and pivoting systems 33115.

Order No.	L	L1	H	α
33150-095	95	50	18	30°
33150-140	140	95	23	15°

Spring mounted centre sleeves

with tension lever

Material:
Steel.

Version:
Black oxidised.

Sample order:
nlm 33180-02

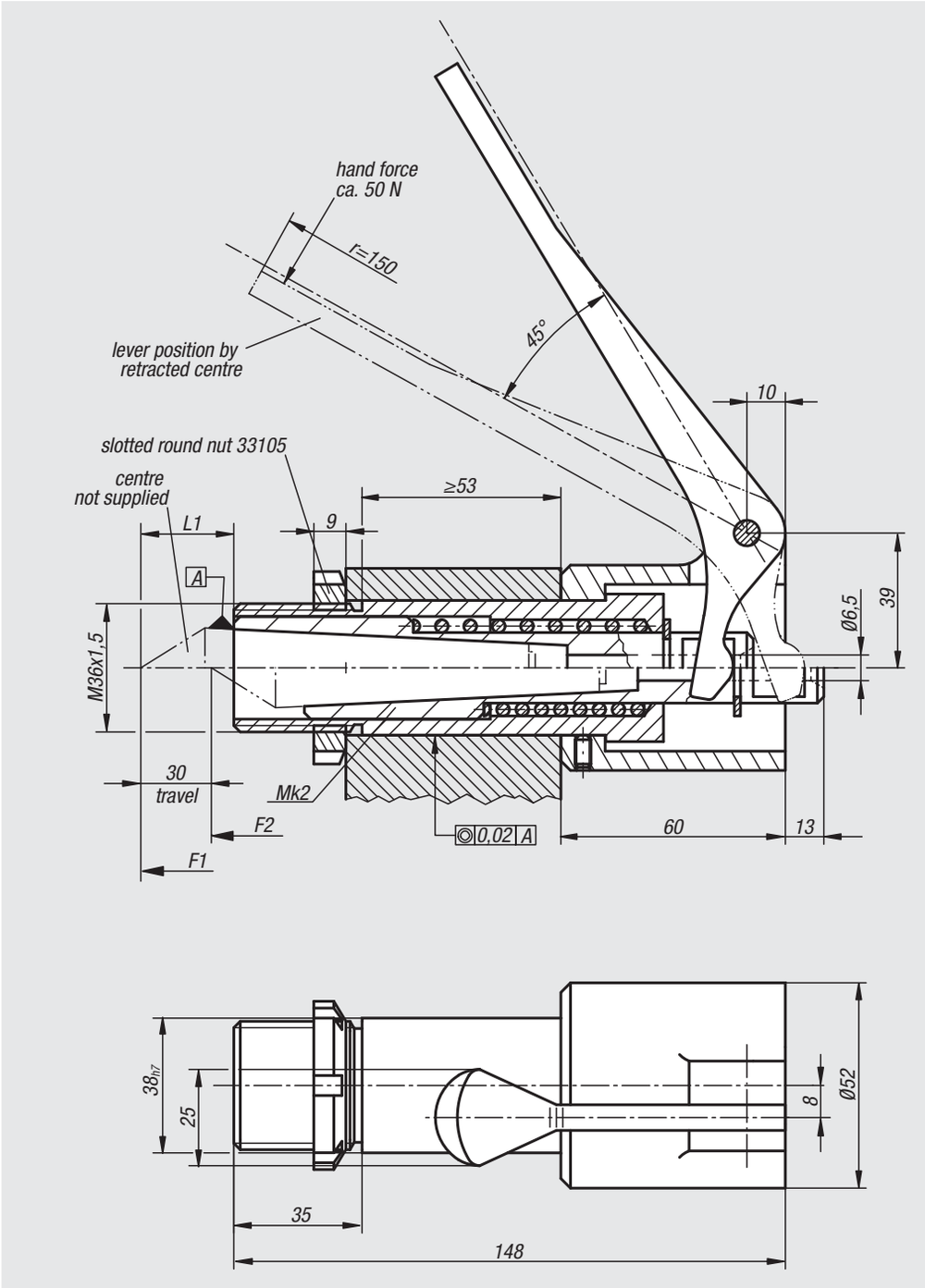

Order No.	L1	Matching fixed centre	Spring force initial pressure F1 approx. N	Final pressure F2 approx. N
33180-02	32	33190-02096	100	150
	41	33190-02105		
	49	33190-02113		

Centre sleeves

spring mounted with retraction cam

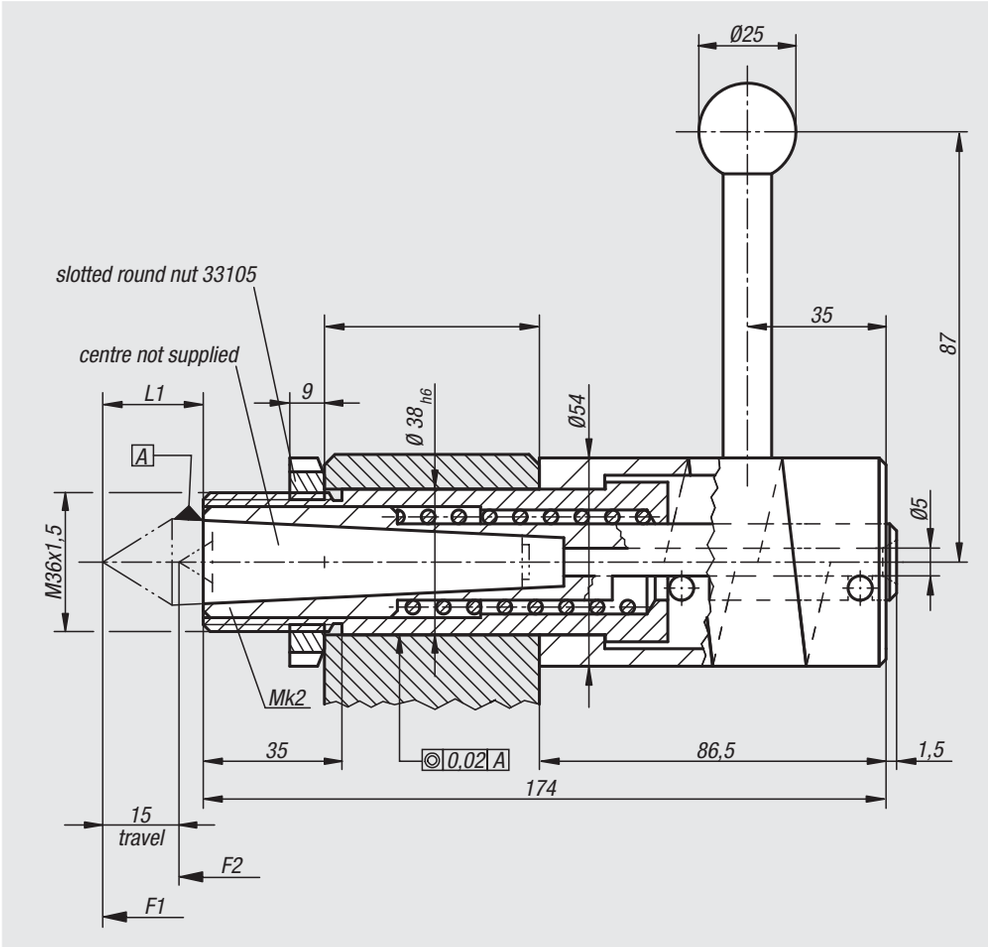

Material:
Steel.
Ball on lever black Duroplast PF 31.

Version:
Black oxidised.

Sample order:
nlm 33182-02

Note:
The max. travel of 15 mm is achieved by rotating the cam 180°.

Order No.	L1	Matching fixed centre	Spring force initial pressure F1 approx. N	Final pressure F2 approx. N
33182-02	32	33190-02096	100	137
	41	33190-02113		
	49	33190-02105		

33184

Adjustable holder

for fixed centres

Material:
Body 1.7220

Version:
Black oxidised.

Sample order:
nlm 33184-02

Note:
Matching fixed centre 33190.

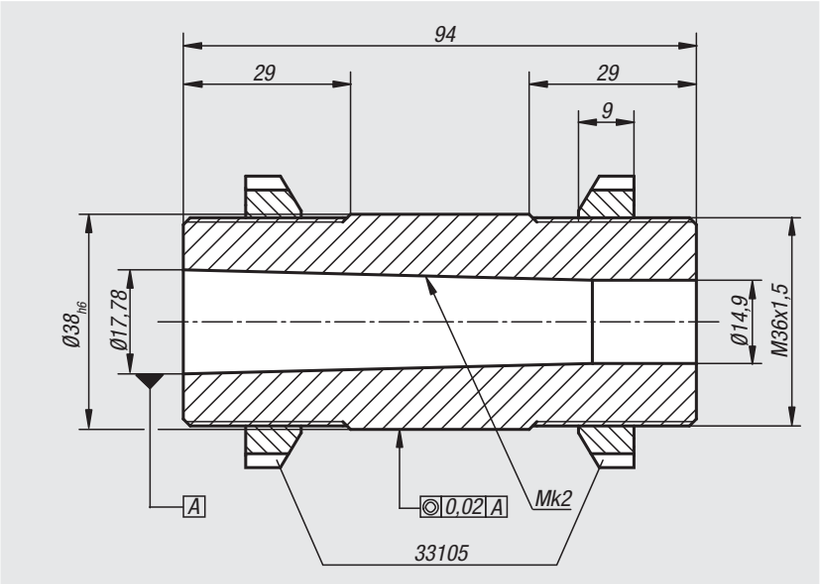

Order No.	Dimensions
33184-02	see drawing

33190

Fixed centres

Material:
1.2067

Version:
Hardened and ground, bright.

Sample order:
nlm 33190-02105

Note:
These fixed centres fit in 33180, 33182 and 33184.

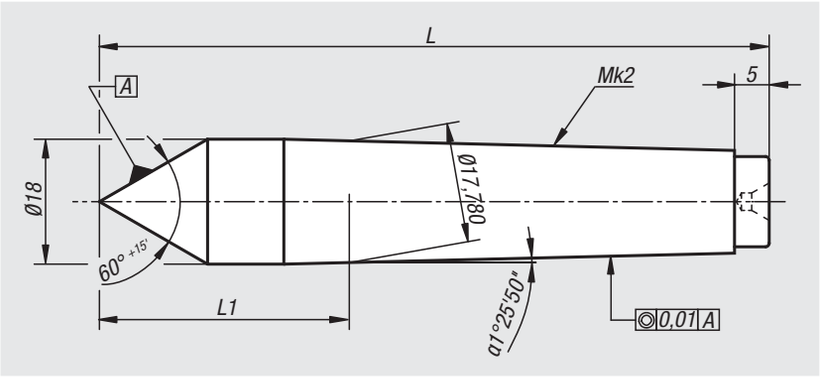

Order No.	L	L1
33190-02096	96	32
33190-02105	105	41
33190-02113	113	49

Notes

Measuring element

for gear wheels

Material:
Steel.

Version:
Black oxidised.

Sample order:
nlm 33202-070

Note:
1 = Probe lever in test position
2 = Probe lever at rest, engaged

Suitable ball holder see 32205.
Dial gauges see 32540 and 32542.
Probe inserts see 33040 up to 33052.

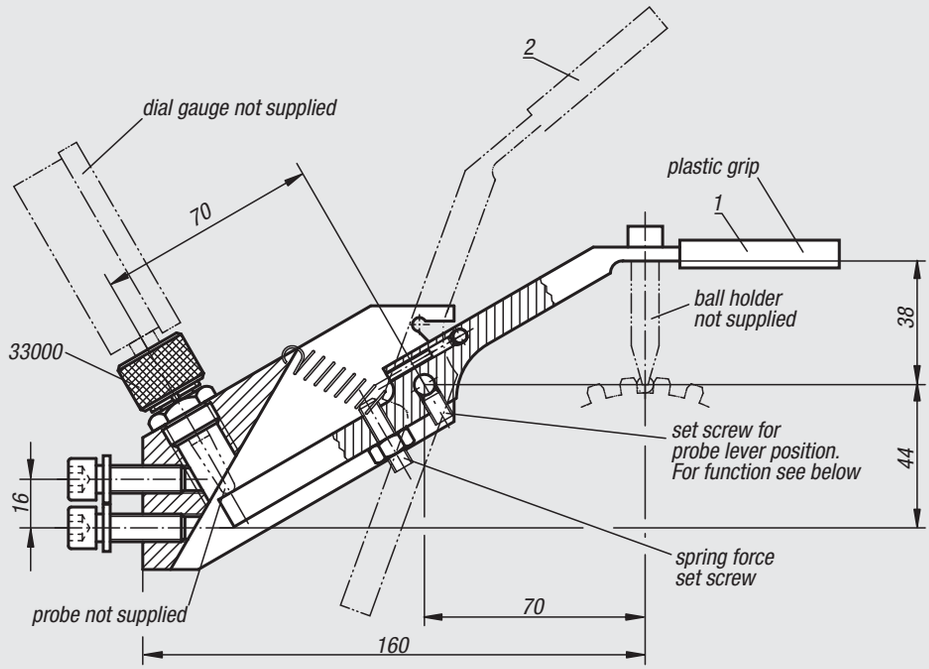

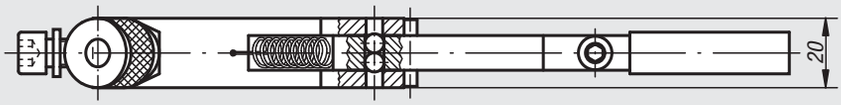

Setting the probe lever position

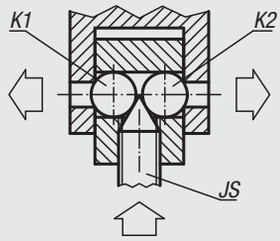

Screwing the set screw (JS) in forces the balls K1 and K2 apart and presses them against the walls enabling play-free adjustment.

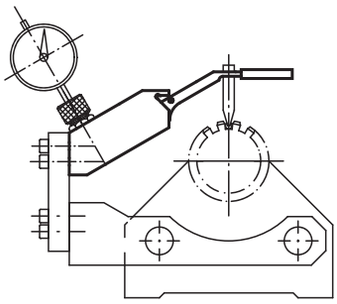

Order No.	Dimensions
33202-070	see drawing

Ball holders

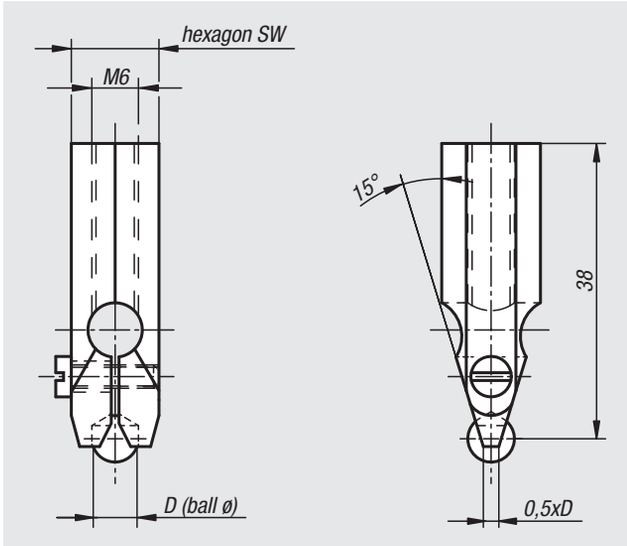

Material:
Spring steel

Version:
Black oxidised.

Sample order:
nlm 33205-03500

Note:
Carbide balls available on request.
The ball holders fit in the measuring element for gear wheels 33202.

Order No.	D	SW
33205-02000	2	10
33205-02380	2,38	10
33205-02500	2,5	10
33205-03000	3	10
33205-03500	3,5	10
33205-03960	3,96	10
33205-04000	4	10
33205-04500	4,5	10
33205-04760	4,76	10
33205-05000	5	10
33205-05560	5,56	10
33205-06000	6	10
33205-06500	6,5	13
33205-07000	7	13
33205-07540	7,54	13
33205-07938	7,938	13
33205-08500	8,5	13
33205-09520	9,52	13
33205-10000	10	13

Precision vice

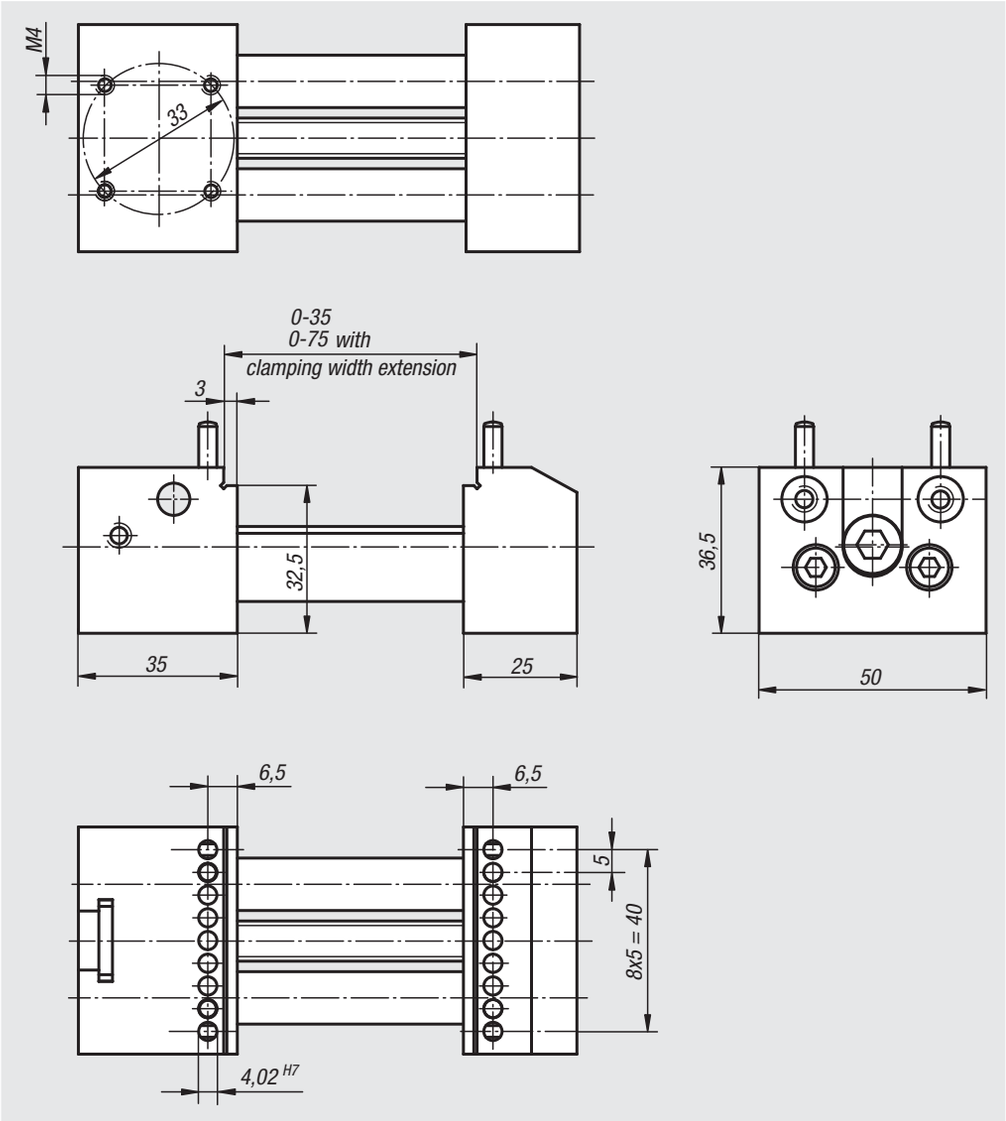

Material:
Steel.

Version:
surface-hardened and precision-ground.

Sample order:
nlm 33225-500351

Note:
The precision vice is a flexible solution for positioning and securing workpieces quickly and easily for metrology machines. Parts are held in the offset jaws or pins that can be inserted into the jaws. The pins allow workpieces to be held in bores. The interchangeable guide columns allow the clamping width to be increased from 35 mm to up to 75 mm. The vice can be placed on the inspection table in 4 positions at right angles to each other.

The vice is supplied with an adjustable stop, a set of columns for extending the clamping width up to 75 mm, a spindle extension, 4 pins and operating tool.

On request:
Set of columns for extending the clamping width 100 mm or 150 mm.

Order No.	Dimensions
33225-500351	see drawing

Accessories for precision vice

33225-01
Offset cylindrical pins
for clamping tall parts

33225-03
Offset cylindrical pins
for clamping tall parts
with 120° vee block

33225-05
Jaws for small parts

33225-06
Prism jaws

33225-07
Prism jaws
with two-point contact

33225-08
Prism jaws
with three-point contact

Order No.	Description	Material	Clamp range	Supplied with
33225-01	**Dowel pin**	steel	-	4-piece set
33225-03	**Dowel pin**	steel	-	4-piece set
33225-05	**Jaw**	stainless steel	<3	single with fastening screws
33225-06	**Prism jaw**	aluminium	Ø2-Ø10	1 pair with fastening screws
33225-07	**Prism jaw**	aluminium	Ø5-Ø20	1 pair with fastening screws
33225-08	**Prism jaw**	aluminium	≤ Ø30	1 pair with fastening screws

Clamping component set

Sample order:
nlm 33250-12

Note:
Clamping component set for microscopes and optical measurement devices to quickly and flexibly clamp small parts. A wide variety of workpieces such as plastic, punched or turned parts can be precisely positioned and securely held. Holding parts, a frequent problem in measuring, is largely solved.

The basis of the clamping system is a high-quality clamping joint that is fixed to the measuring table. A quick-change interface allows elements such as chucks or clamps to be easily mounted on the clamping joint.

Supplied in a wooden case.

Application:
- chuck and V-block for holding rotationally symmetric parts
- stop angle, clamping clip and small parts clamps for clamping e.g. plate or sheet metal and bent parts.

12 piece

small parts clamp

clamping clip

spring clamp for horizontal clamping right/left

rotational unit 90° pitch

spring clamp 34/50 mm

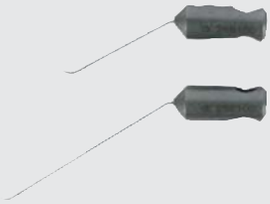

clamping joint

vee-block with spring clamp

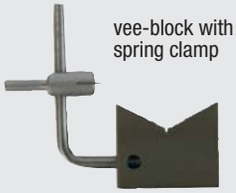

universal hex socket key

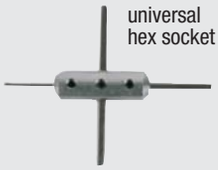

column

stop angle

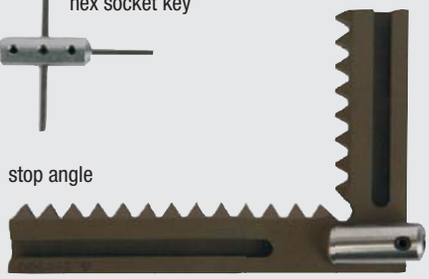

18-part (in addition to the 12-part)

clamping joint holder, vertical

small parts clamp "screw clamping"

spring clamp 34/50 for vertical clamping

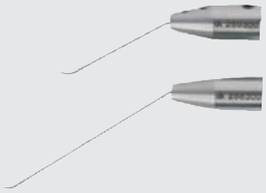

column

precision chuck

Clamping joint with precision small chuck

Clamping joint with small parts clamp

Clamping joint with vee-block and spring clamp

Order No.	Version
33250-12	12 piece
33250-18	18 piece

Spring fingers

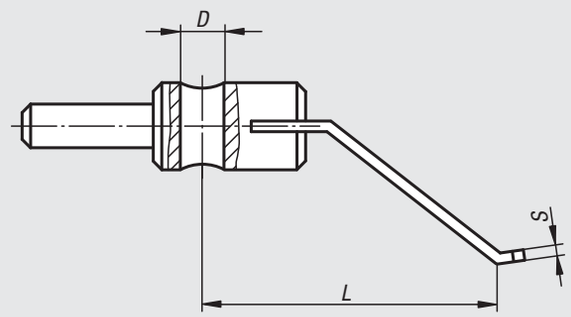

Spring finger, flat

Spring finger with fork

Spring finger, round wire

Material:
Stainless steel

Version:
Bright.

Sample order:
nlm 33260-10605010

Note:
For holding small parts on measurement and control plates.

Accessories:
Columns for spring fingers 33262.

Order No.	Version	D	L	S
33260-10403004	flat	4	30	0,4
33260-10403008	flat	4	30	0,8
33260-10605010	flat	6	50	1
33260-10607510	flat	6	75	1
33260-11207510	flat	12	75	1
33260-11209510	flat	12	95	1
33260-21207515	fork	12	75	1,5
33260-21209515	fork	12	95	1,5
33260-30404011	round	4	40	1,1
33260-30406011	round	4	60	1,1
33260-31208025	round	12	80	2,5
33260-31208030	round	12	80	3

Columns

for spring fingers

Material:
Stainless steel 1.4301.

Version:
Bright.

Sample order:
nlm 33262-0606X030 (include length L)

Note:
Columns for holding our spring fingers.

Accessories:
Spring clamp 33260.

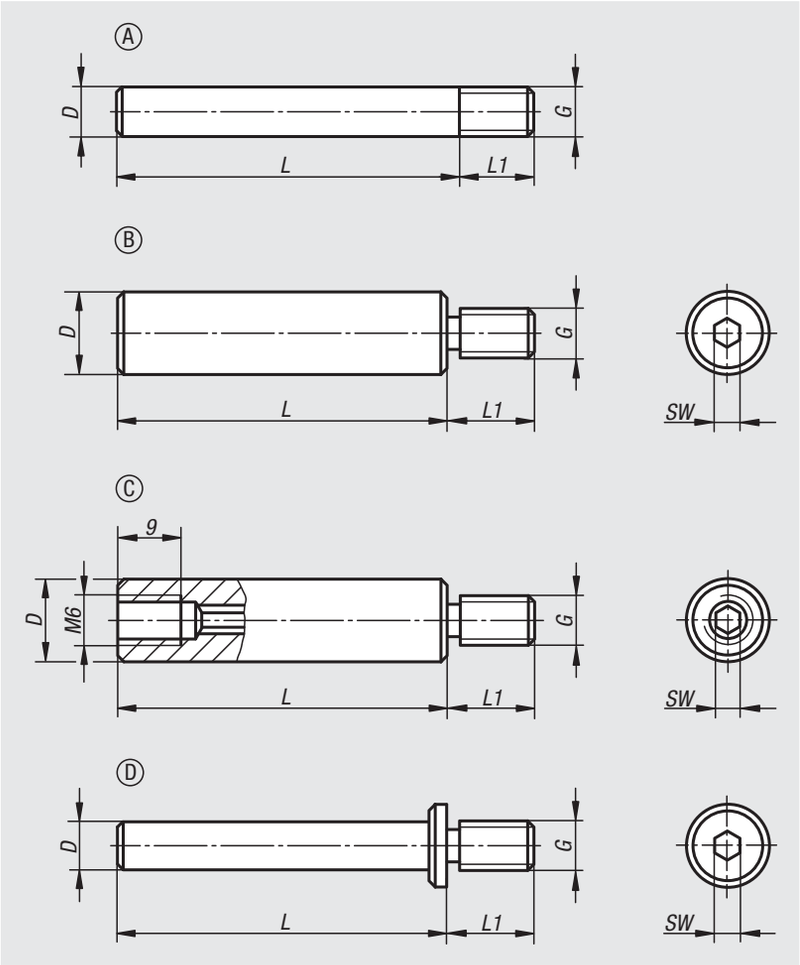

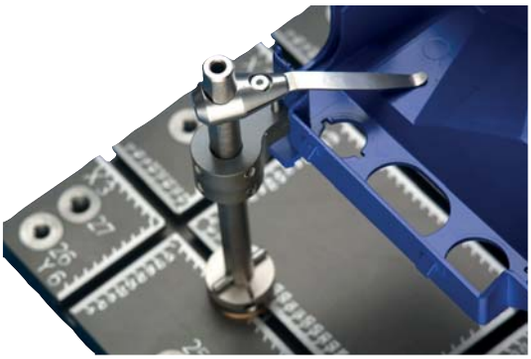

Order No.	Form	D	G	L	L1	SW
33262-0404X	A	4	M4	30/50	5	-
33262-0606X	A	6	M6	30/50	8	-
33262-0608X	D	6	M8	30/50	10	3
33262-1206X	C	12	M6	50/100	8	3
33262-1208X	B	12	M8	50/100	11,5	4
33262-1210X	B	12	M10	50/100/150	11,5	4

41000

Vices

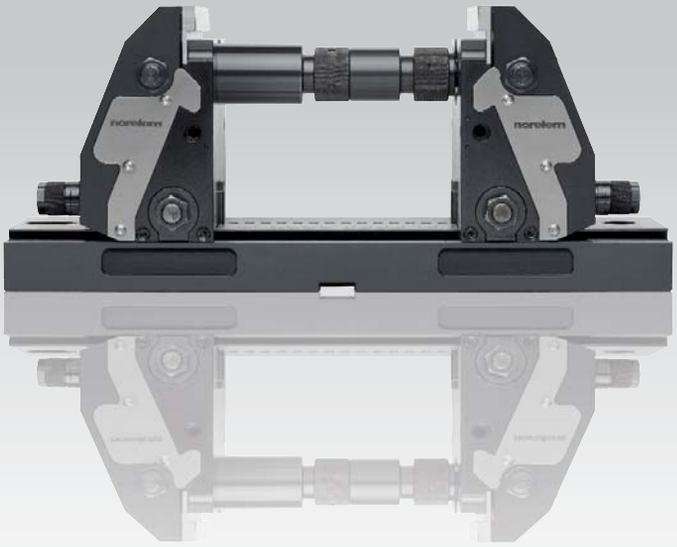

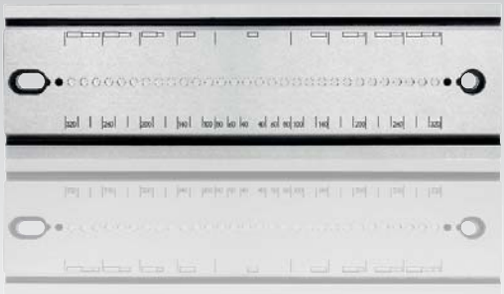

5-axis clamping system compact

Function

We are setting standards with the new “5-axis clamping system compact” in this field. The system was specifically designed for the optimal machining of complex workpieces on modern 5-axis machines.

The intelligent clamping technology increases clamping rigidity for the highest cutting and feed forces. The optimal accessibility to the workpiece allows short, standard tooling to be used. Tooling costs are significantly reduced.

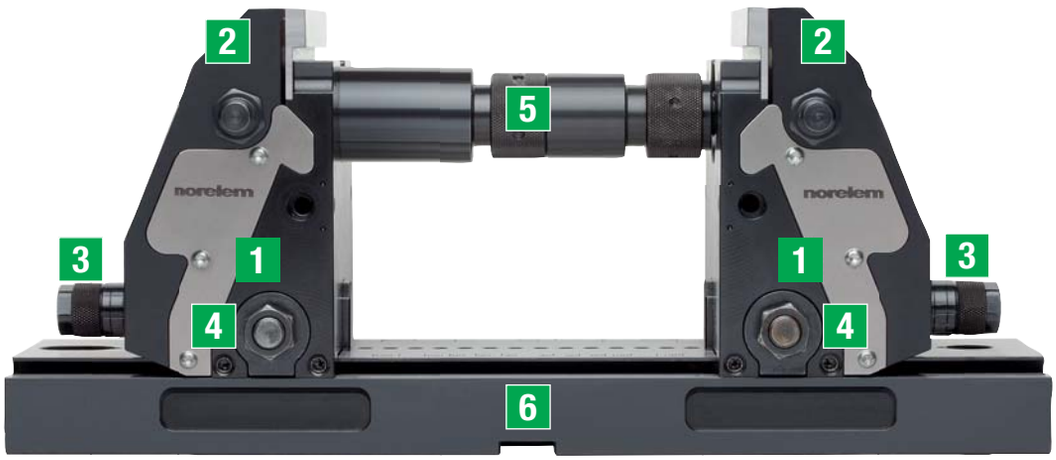

1 Positioning unit with jaw plate
2 Clamping element
3 Fine adjustment with knurled screw
4 Clamping screw
5 Extension shafts
6 Base plate

ADVANTAGES:

- Very high tractive force
- High stiffness in the system
- Pull-down function of the jaw plates on both sides
- Optimum fine adjustment of the jaw plates on the workpiece
- Increased tool service life
- The workpiece is always centred due to the systematic construction
- Large clamping width, 20 mm to 320 mm, freely extendable
- Clamping depth adjustable from 3 to 20 mm using seating ledges
- Best tool accessibility from all sides
- Easy to clean

Forces

The new clamping technology ensures force flow separation and workpiece positioning. The intelligent force distribution in the system allows only weak forces to be transferred to the machine table.

- **Division of force flow and positioning**
- **Highest clamping force on the workpiece**
- **Maximum stiffness**
- **Centric tension**

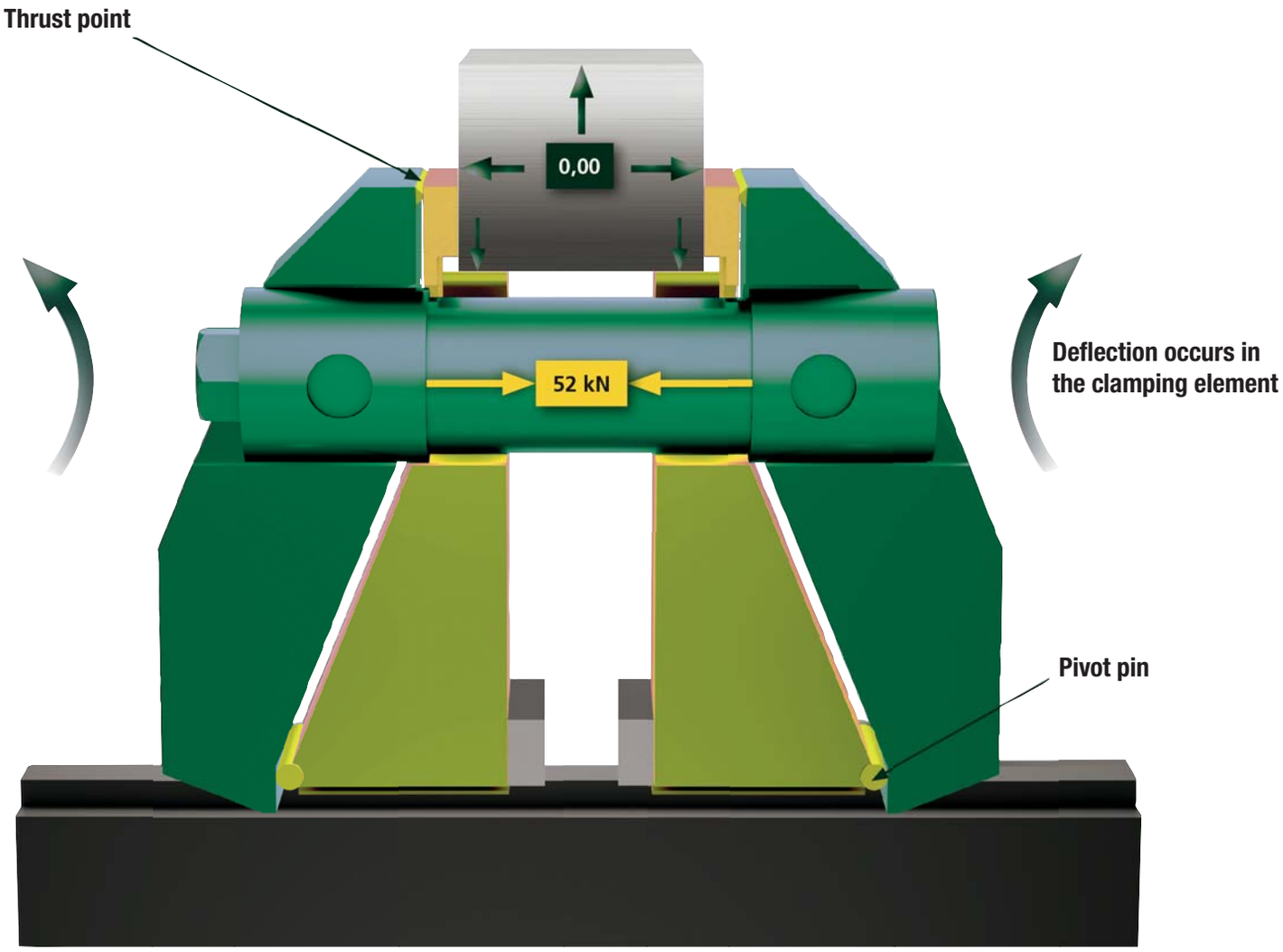

Locators

Clamping elements

Clamped workpiece using jaw plates with pins. The high tractive force creates a positive clamping situation.

Clamped blank. Sure set-up through positive clamping pins.

Blank after clamping. Clamping pin imprint is visible on the edge of the workpiece.

With the coupling for cross-clamping, two 5-axis clamping systems can be compactly connected with each other offset by 90 degrees. Setups for workpieces with different dimensions of 4 sides are possible.

5-axis clamping system compact direct on the machine table.
Workpiece clamping with smooth jaws.

The jaws can be quickly tightened or loosened using the adjustable handles.
When the clamping lever is open, the jaws can be fine adjusted with the knurled knob.

5-axis clamping system compact

jaw plate, smooth

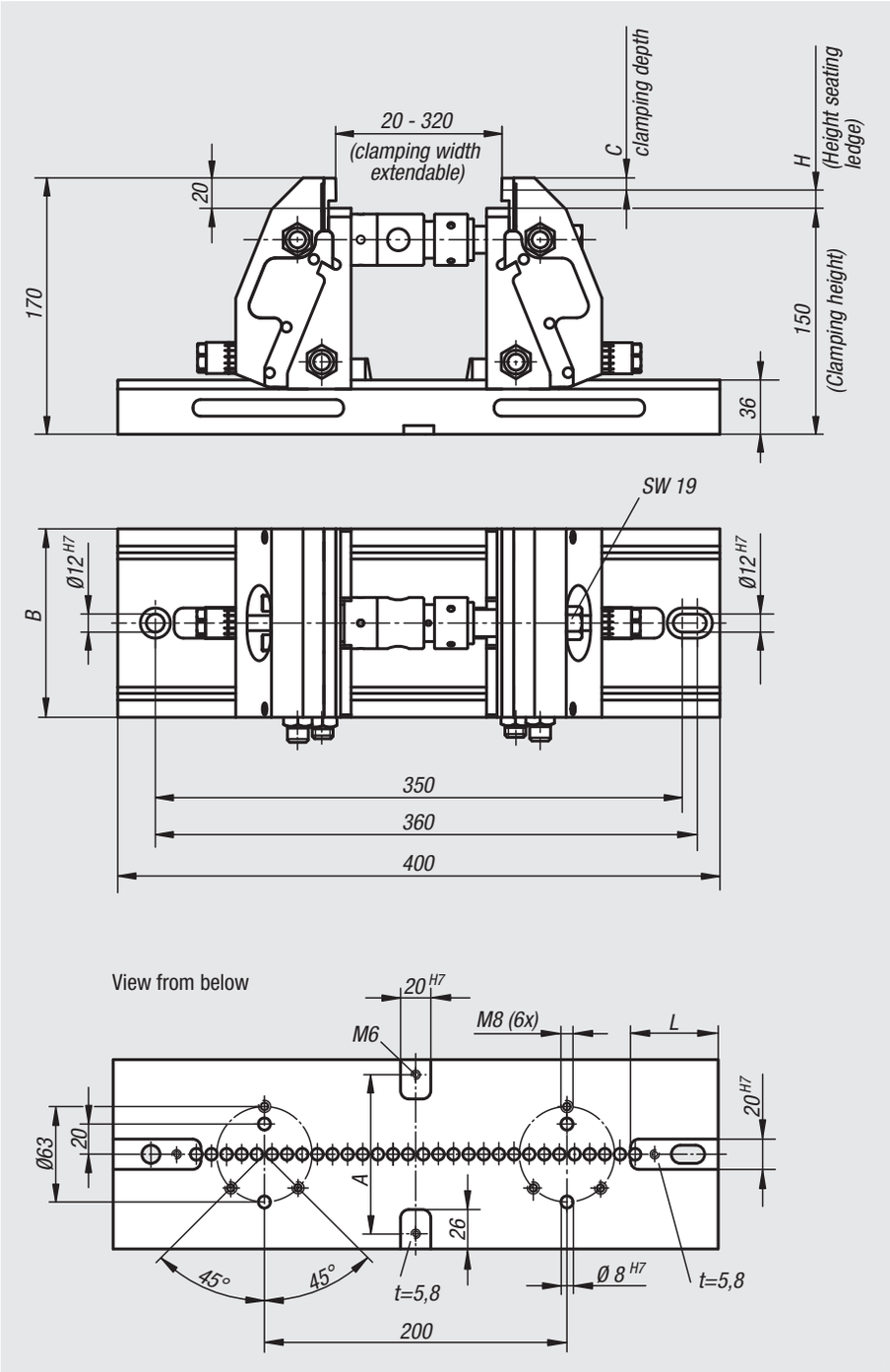

Material:
Base plate and jaw hardened steel.
Vice jaws tool steel.

Version:
Jaws black oxidised.
Jaw plates bright.

Sample order:
nlm 41300-124000901500

Note:
The easy operability and rapid adjustment using a scale means that the clamping jaws can be quickly and surely adapted to new workpieces
The workpiece is always centred through the systematic construction of the 5-axis compact clamping system.
The optimal accessibility to the workpiece allows short, standard tooling to be used. Tooling costs are significantly reduced.

Positive down force by a clamping depth of >5 mm.
Clamping widths of 20 mm to 320 mm are possible.

Assembly:
The 5-axis clamping system compact can be mounted on T-slot tables, grid systems or, using an adapter flange on conventional zero-point clamping systems.

Accessories:
Seating ledge 41345
Jaw plates 41320
Pendulum jaws 41325
Centre jaws 41335
Coupling for cross-clamping 41365

Order the seating ledges and jaw plates with pins separately.

Tractive force 5-axis clamping system compact

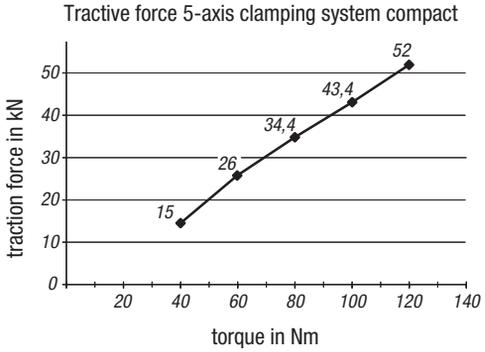

Order No.	A	B	C	H	L	Tractive force max. kN	Suitable shoulder screw	weight kg
41300-124000901500	70	90	8/3	12/17	57,5	52	07533-12055	22.272
41300-124001251500	105	125	8/3	12/17	58	52	07533-12055	31

Base plates

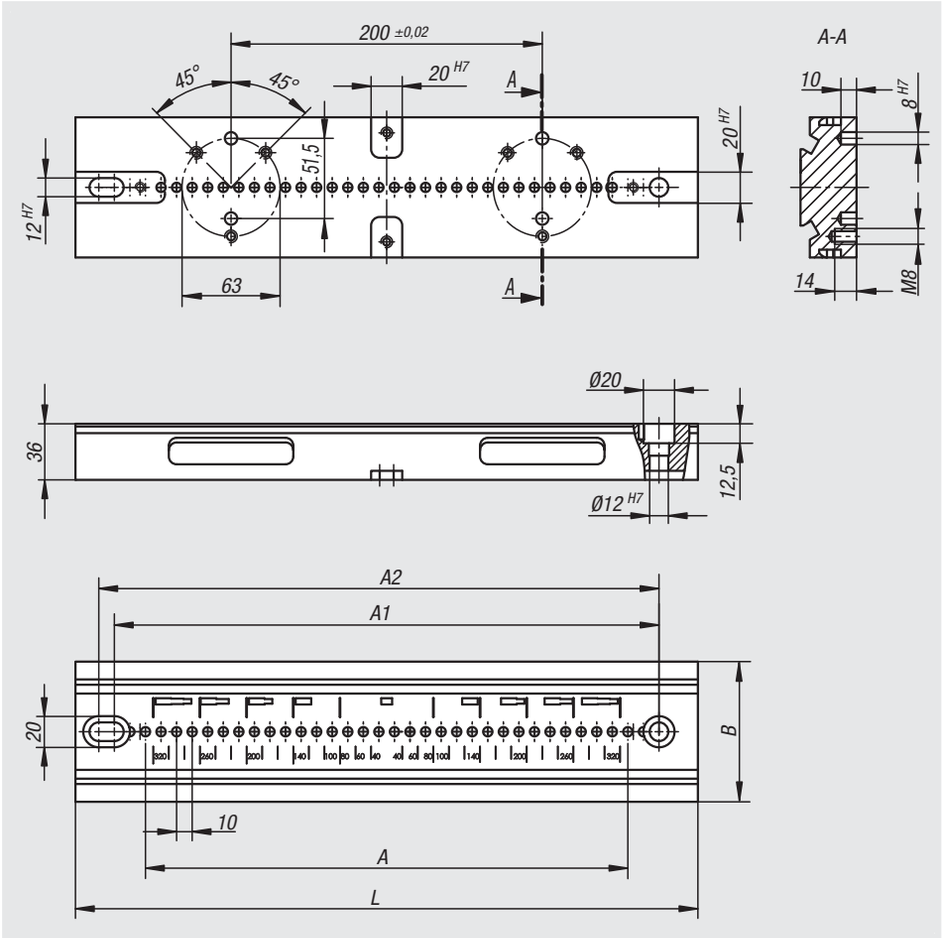

Material:
Steel.

Version:
Black oxidised.
Function faces ground.

Sample order:
nlm 41305-090280

Note:
Base plates with locating slots on the underside for easy alignment of the plate on the machine table.
Securing via grid holes 12F7 for 40 mm and 50 mm grid spacing possible.
Lateral recesses provided for separate clamping means.

Order No.	A	A1	A2	B	L	Suitable shoulder screw	weight kg
41305-090280	20x10	240	250	90	280	07533-12055	5.74
41305-125280	20x10	240	250	125	280	07533-12055	8.52
41305-090400	31x10	350	360	90	400	07533-12055	8.33
41305-125400	31x10	350	360	125	400	07533-12055	12.25

Vice jaws complete

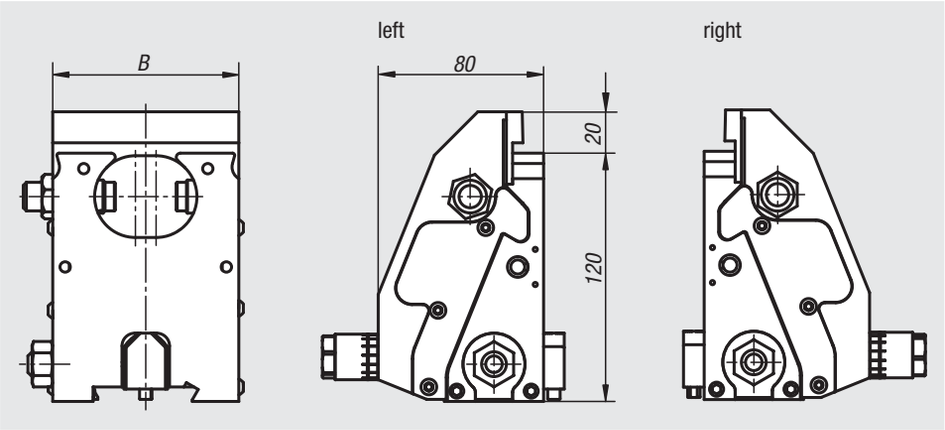

Material:
Jaws mild steel.
Jaw plates tool steel.

Version:
Jaws black oxidised.
Vice jaws bright.

Sample order:
nlm 41315-09015010

Note:
These vice jaws are for expanding the 5-axis clamping system compact.
With these vice jaws large workpieces can be held on all four sides by cross clamping. Base plates, extension shafts and the coupling for cross-clamping are also needed for this set up.

Order No.	Version	B	weight kg
41315-12515020	left	125	7.416
41315-12515010	right	125	7.416
41315-09015020	left	90	5.18
41315-09015010	right	90	5.18

Jaw plates smooth

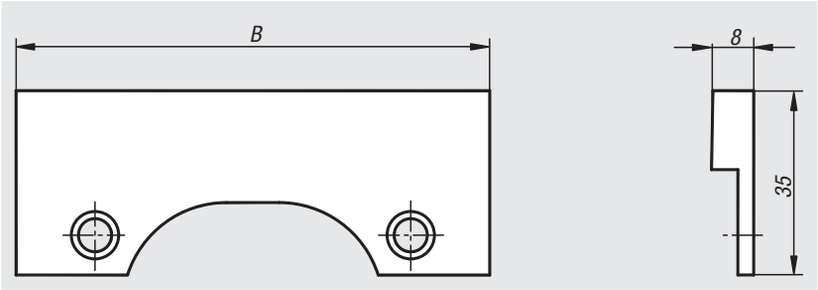

Material:
Tool steel.

Version:
Hardened, bright.

Sample order:
nlm 41320-0900

Note:
For clamping pre-machined workpieces and for final machining.

Supplied singly.

Order No.	B
41320-0900	90
41320-1250	125

Jaw plates with pins

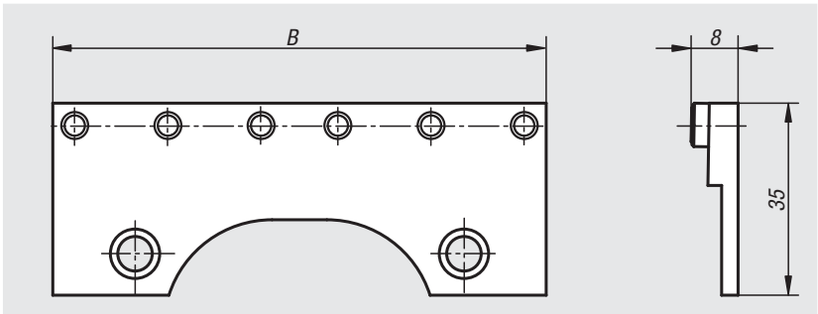

Material:
Tool steel.

Version:
Plate hardened, bright.
Pins hardened, black oxidised.

Sample order:
nlm 41320-0901

Note:
For positive clamping without preforming, e.g. rough pieces, heavy cutting, castings etc.

Supplied singly.

Order No.	B	No. of pins
41320-0901	90	6
41320-1251	125	8

Jaw plates

machinable

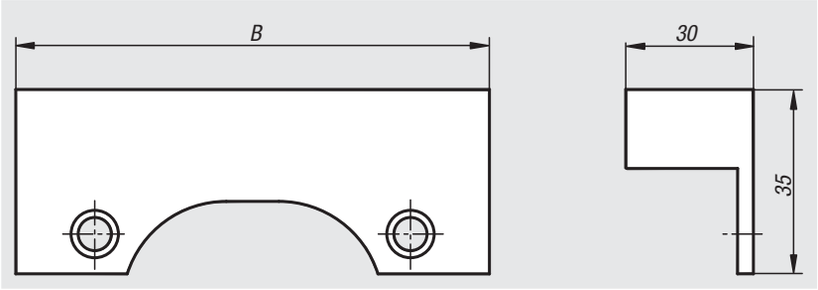

Material:
Carbon steel.

Version:
Black oxidised.

Sample order:
nlm 41320-0902

Note for ordering:
Supplied singly.

Note:
Machinable jaw plates are ideal for gripping on workpiece contours and machining in steps.

Order No.	B
41320-0902	90
41320-1252	125

Notes

Pendulum jaws

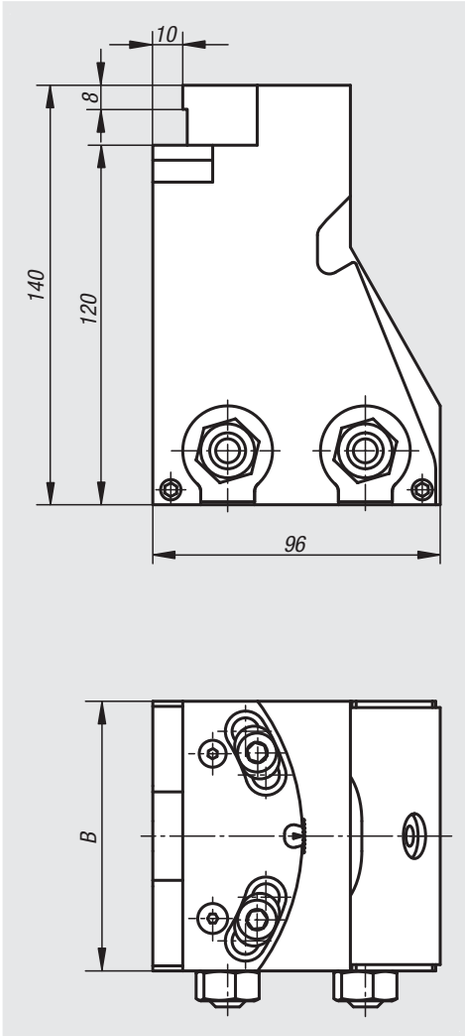

Material:
Body mild steel.
Jaw plates tool steel.

Version:
Body black oxidised.
Vice jaws hardened, bright.

Sample order:
nlm 41325-09015010

Note:
Pendulum jaws are used to hold oblique workpieces.
The jaw plates of the pendulum jaws can be swivelled by ± 4°.
Pendulum jaws can also be used as fixed jaws.
Rigid design with 2 fastening screws.

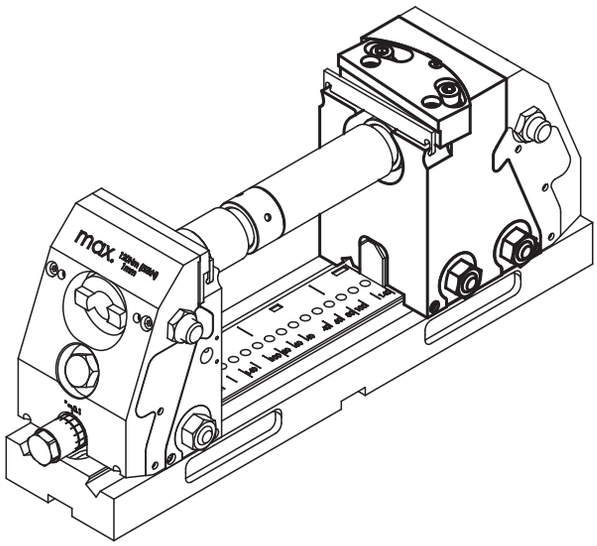

Order No.	B	weight kg
41325-09015010	90	6
41325-12515010	125	8.77

Jaw plates smooth

for pendulum jaws

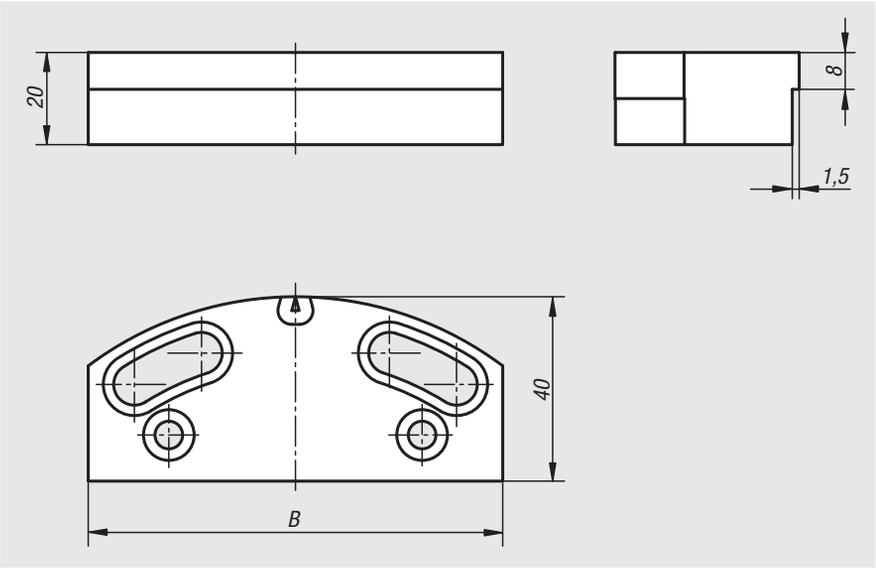

Material:
Tool steel.

Version:
Hardened, bright.

Sample order:
nlm 41330-0900

Note:
For clamping pre-machined and ground workpieces.

Supplied singly.

Order No.	B
41330-0900	90
41330-1250	125

Jaw plates with pins

for pendulum jaws

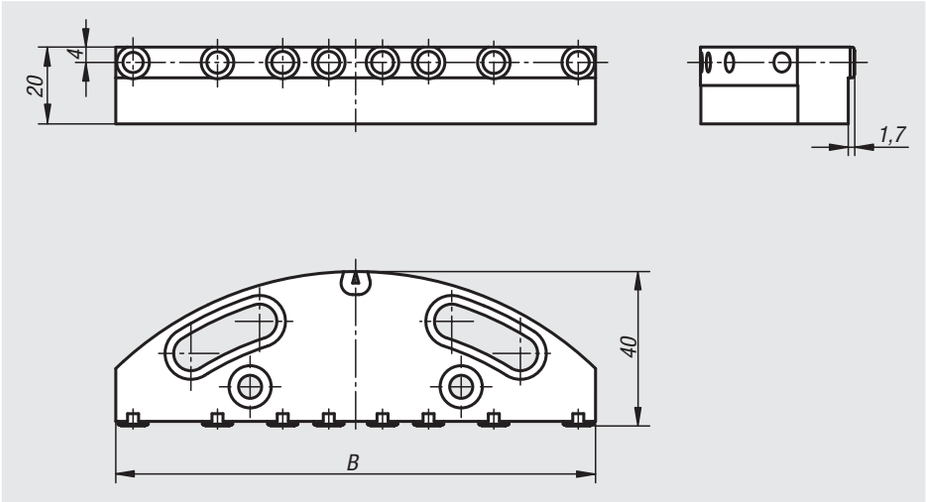

Material:
Tool steel.

Version:
Vice jaw hardened, bright.
Pins hardened, black oxidised.

Note for ordering:
41330-0901

Note:
For positive clamping without preforming, e.g. rough pieces, heavy cutting, castings etc.

Supplied singly.

Order No.	B	No. of pins
41330-0901	90	6
41330-1251	125	8

Centre jaws

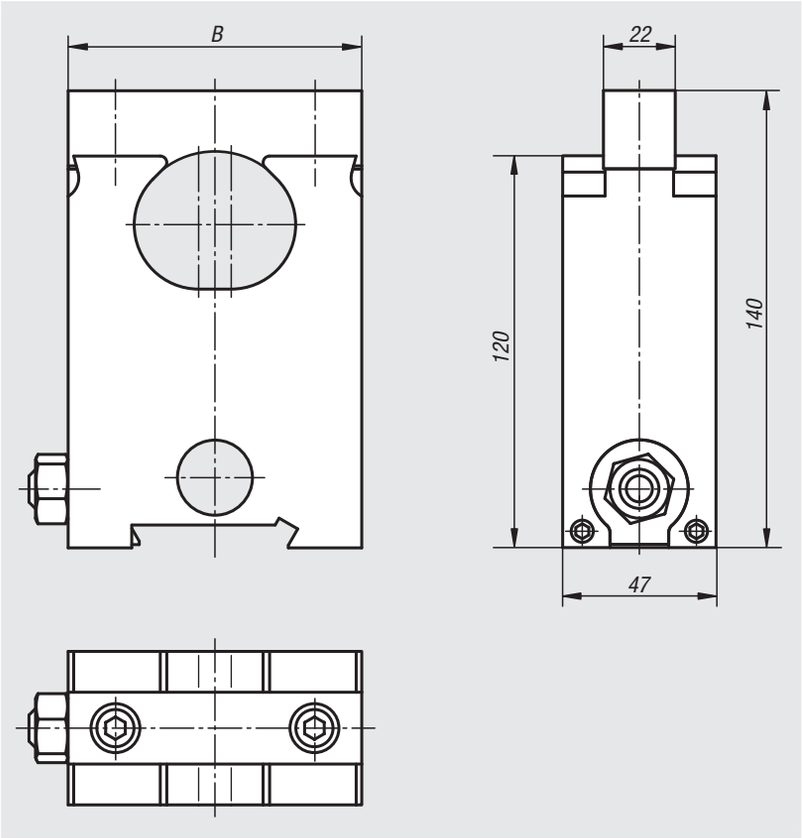

Material:
Body mild steel.
Jaw plates tool steel.

Version:
Body black oxidised.
Vice jaws hardened, bright.

Sample order:
nlm 41335-0901500

Note:
Centre jaws are used to clamp 2 workpieces simultaneously.
The centre jaws can be moved to suit the size of the workpiece. 2 different sized workpiece can be clamped.

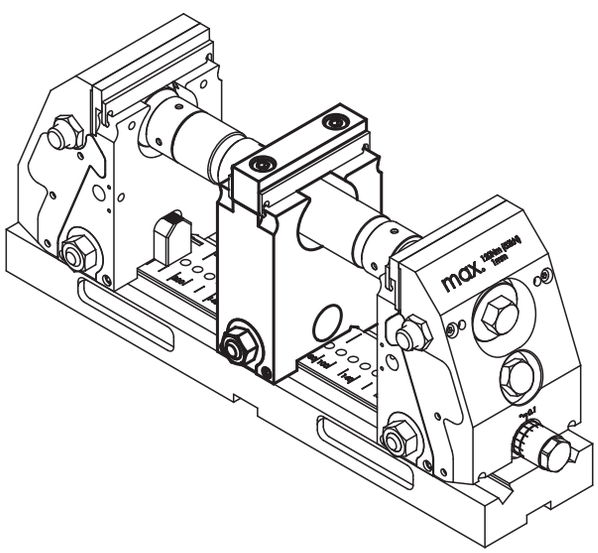

Order No.	B	weight kg
41335-0901500	90	3.38
41335-1251500	125	4.94

Jaw plates smooth

for centre jaws

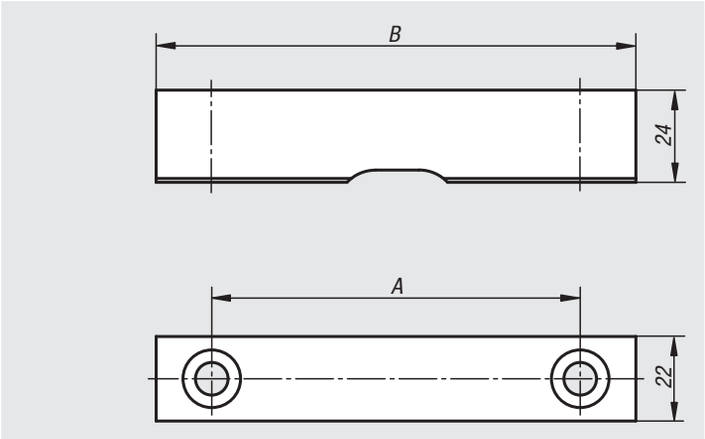

Material:
Tool steel.

Version:
Hardened, bright.

Sample order:
nlm 41340-0900

Note:
For clamping pre-machined and ground workpieces.

Supplied singly.

Order No.	A	B
41340-0900	61	90
41340-1250	96	125

Jaw plates with pins

for centre jaws

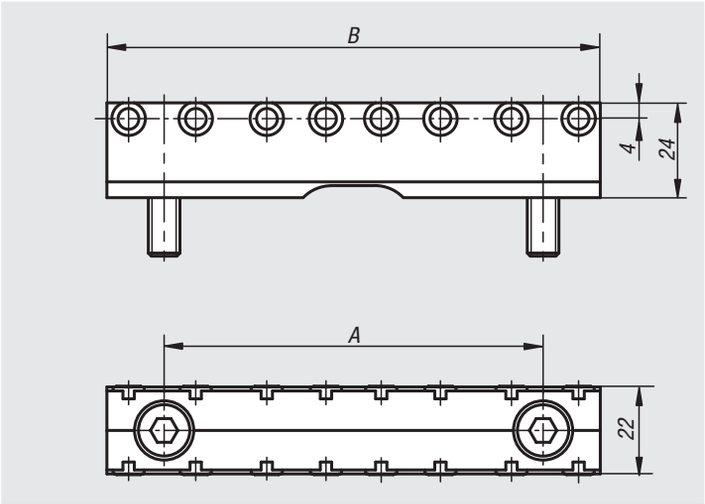

Material:
Tool steel.

Version:
Vice jaw hardened, bright.
Pins hardened, black oxidised.

Sample order:
nlm 41340-0901

Note:
For positive clamping without preforming, e.g. rough pieces, heavy cutting, castings etc.

Supplied singly.

Order No.	A	B	No. of pins
41340-0901	61	90	6
41340-1251	96	125	8

41345

Seating ledges

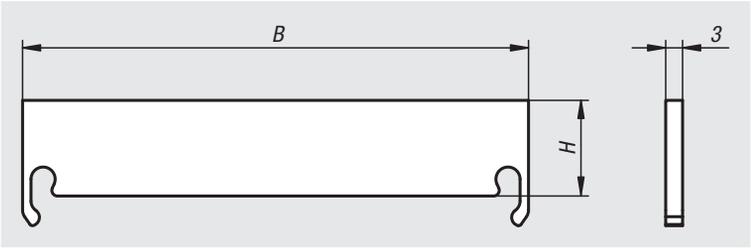

Material:
Hardened steel

Version:
Bright.

Sample order:
nlm 41345-0900312

Note:
The seating ledges are suitable for adjusting the clamping depth of the workpiece on the compact 5-axis clamping system.
The 12 mm version does not interfere with the positive-down effect.
By the 17 mm version, the positive-down force is reduced but causes less edge deformation.

Supplied in pairs.

Order No.	B	H
41345-0900312	90	12
41345-0900317	90	17
41345-1250312	125	12
41345-1250317	125	17

41060

Jaw pins

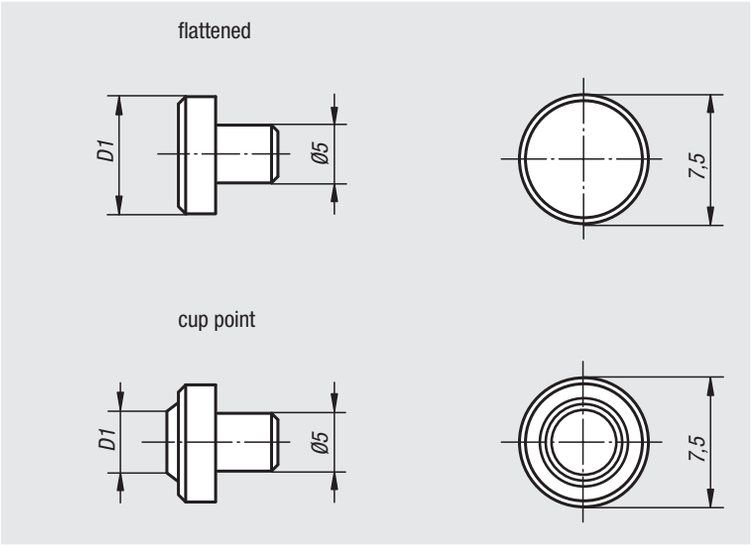

Material:
Tool steel.

Version:
Hardened.

Sample order:
nlm 41060-05000

Note:
Suitable for standard jaw plates and jaw adapters of round workpieces.
Installed by pressing in.

Order No.	Version	D1	Application
41060-05000	flattened	7,5	Material over 1000 N/mm² tensile strength
41060-05400	cup point	4	Material up to ca. 1000 N/mm² tensile strength
41060-05600	cup point	6	Material up to ca. 1000 N/mm² tensile strength

Cylinder clamping sets

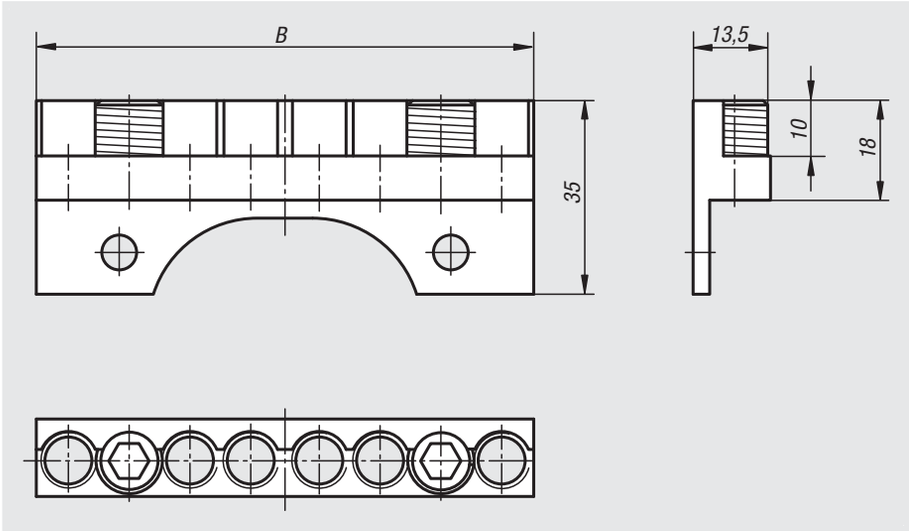

Material:
Tool steel.

Version:
Vice jaw hardened, bright.
Pins hardened, black oxidised.

Sample order:
nlm 41350-09035

Note:
For holding round workpieces.

Supplied in pairs.

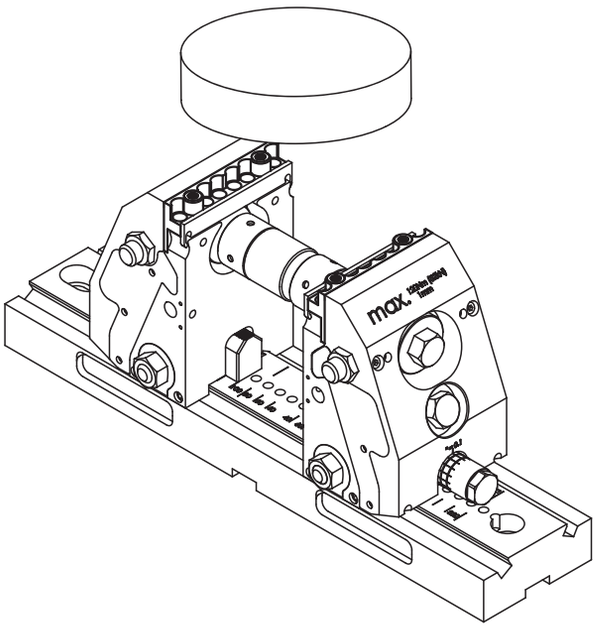

Order No.	B	Clamping range min. - max.
41350-09035	90	20 mm - 250 mm
41350-12535	125	20 mm - 320 mm

41355

Extension shafts

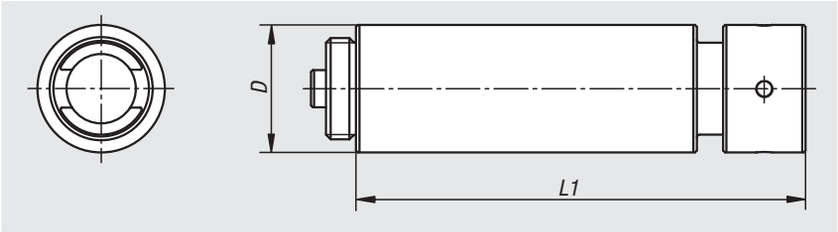

Material:
Carbon steel.

Version:
Black oxidised.

Sample order:
nlm 41355-060

Note:
For setting the clamping width.
Supplied with union nut.
The extension shafts can be combined as required.

Order No.	D	L1
41355-060	34	60
41355-120	34	120
41355-240	34	240
41355-480	34	480

41360

Adapter shafts

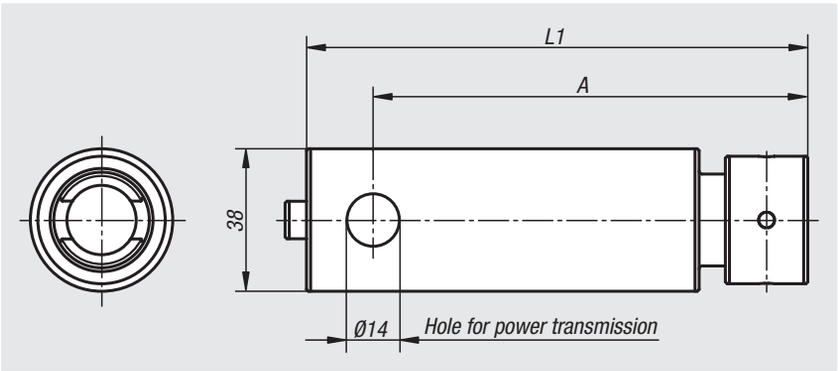

Material:
Carbon steel.

Version:
Black oxidised.

Sample order:
nlm 41360-060

Note:
For setting the clamping width.
Supplied with union nut.
The adapter shafts are linked to the vice jaws by the lateral holes.
An adapter shaft must be mounted in every compact 5-axis clamp.

Order No.	D	L
41360-060	38	60
41360-120	38	120

Couplings

for cross-clamping

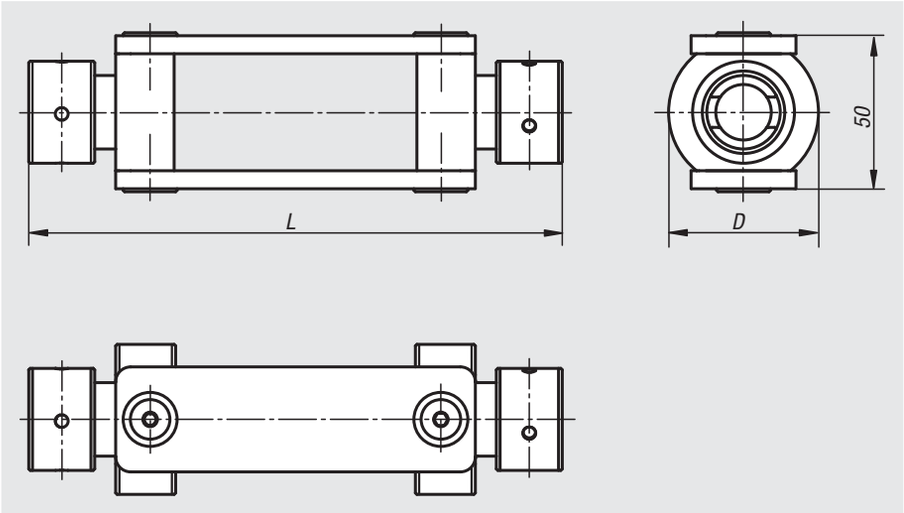

Material:
Carbon steel.

Version:
Black oxidised.

Sample order:
nlm 41365-178

Note:
Two 5-axis clamping systems can be connected using a coupling for cross-clamping, allowing a workpiece to be held on four sides.

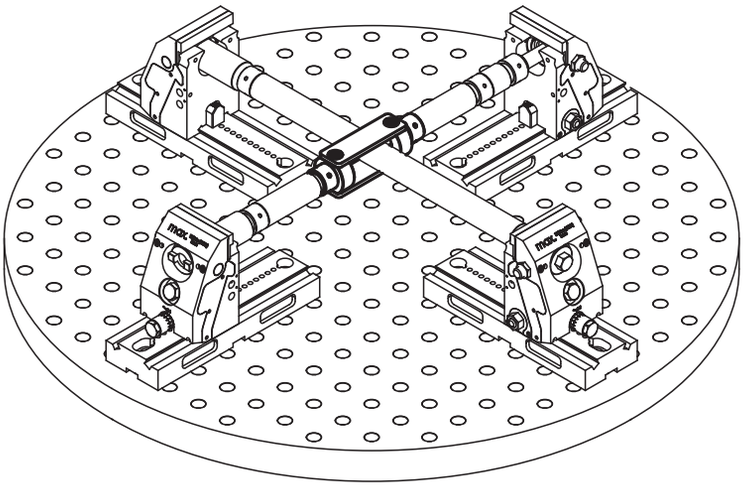

Order No.	D	L
41365-178	50	178

Stop sets

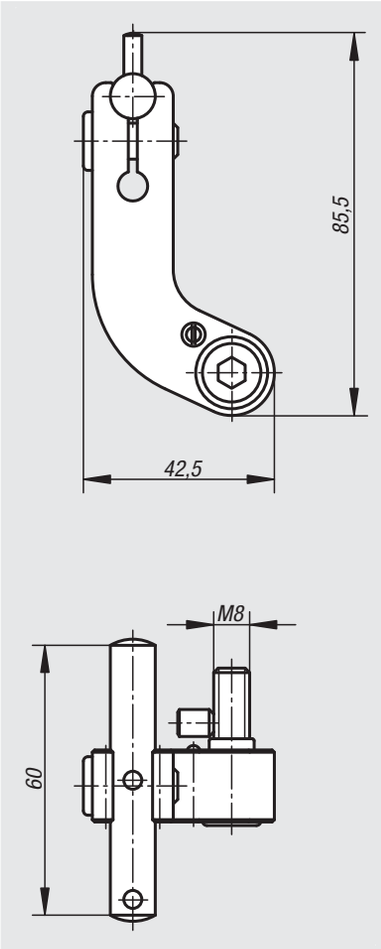

Material:
Steel.

Version:
Swivel arm, black oxidised.
Stop pin bright.

Sample order:
nlm 41370-150

Note:
Stop set for direct fastening to jaws.The stop can be swivelled aside for machining the workpiece without losing the stop dimension.

Supplied complete with attachment parts.

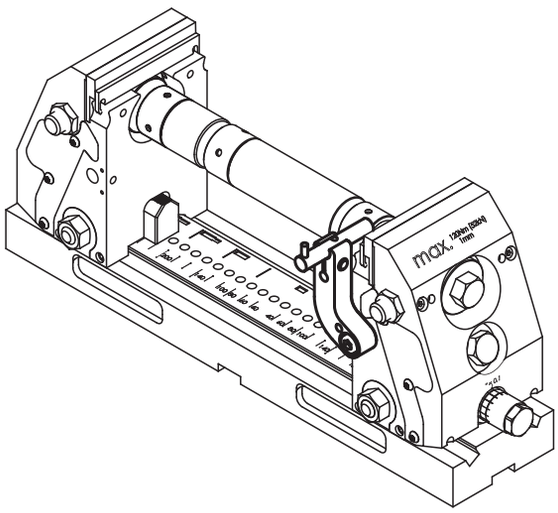

Order No.	Suitable for
41370-150	5-axis compact clamping system

Clamping claw sets

Material:
Carbon steel.

Version:
Black oxidised.

Sample order:
nlm 41375-0012

Note:
Clamping claw set for compact 5-axis clamping system.
All common T-slots, grid and fastening hole spacings can be covered.

41375-0012
41375-0016

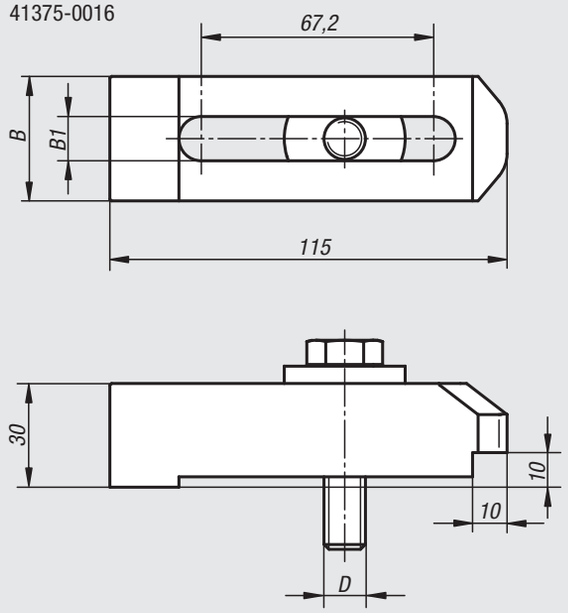

41375-1412
41375-1816

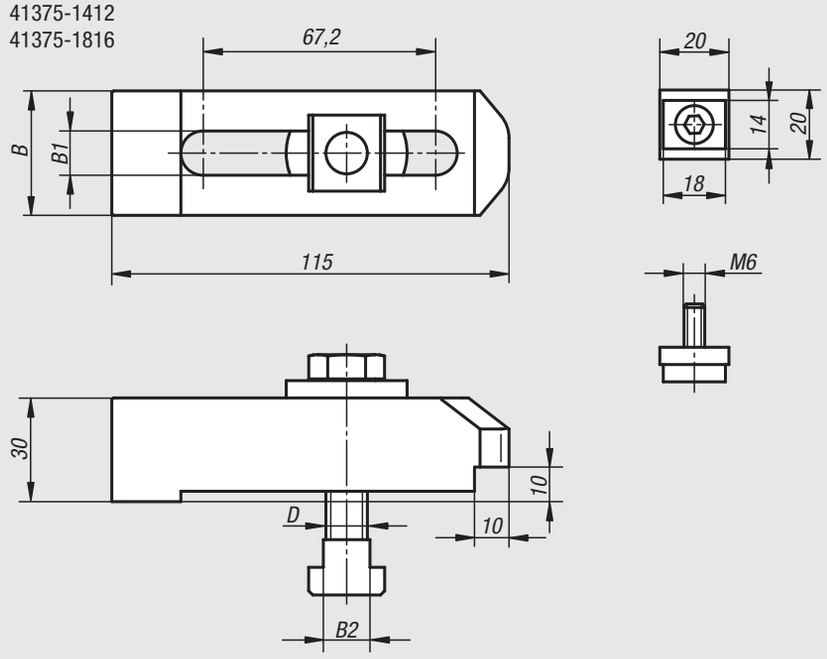

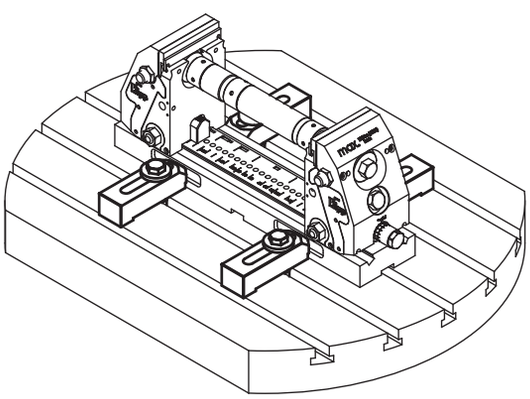

Order No.	B	B1	B2	D
41375-0012	40	12,8	-	M12
41375-0016	40	16,8	-	M16
41375-1412	40	12,8	13,5	M12
41375-1816	40	16,8	17,5	M16

Notes

95000

Material handling and transport

Swivel and fixed castors

standard version

Material:
Housing steel plate.
Wheel treads solid rubber.
Wheel rims polyamide.

Version:
Housing press formed.
Double ball bearing in the castor head.
Plain bearing in wheels.

Sample order:
nlm 95010-07525

Note:
Wheel axle bolted.
Swivel and fixed castors with bolt hole.
Wheels grey, non-marking.

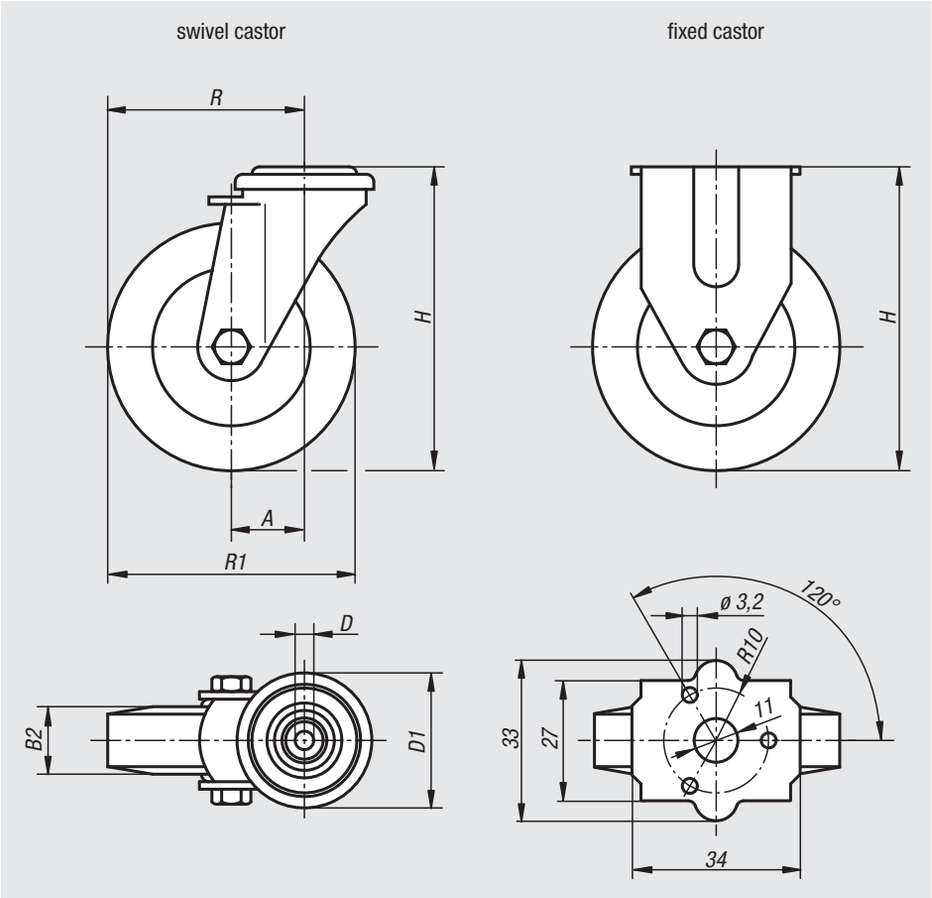

swivel head bearing

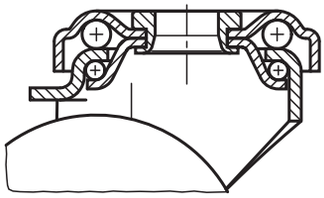

Order No. fixed castors	Order No. swivel castors	Order No. with stop-fix	Wheel bearing	A	B2	D	D1	H	R	R1	Permissible load kg
95010-050181	**95010-05018**	**95010-050182**	plain bearing	-/25/25	18	-/11/11	-/43/43	69	-/50/50	50	40
95010-075251	**95010-07525**	**95010-075252**	plain bearing	-/28/28	25	-/11/11	-/43/43	98	-/65,5/65,5	75	60
-	**95010-10025**	**95010-100252**	plain bearing	33/33	25	11/11	43/43	121	83/83	100	70

Swivel and fixed castors

electrically conductive, standard version

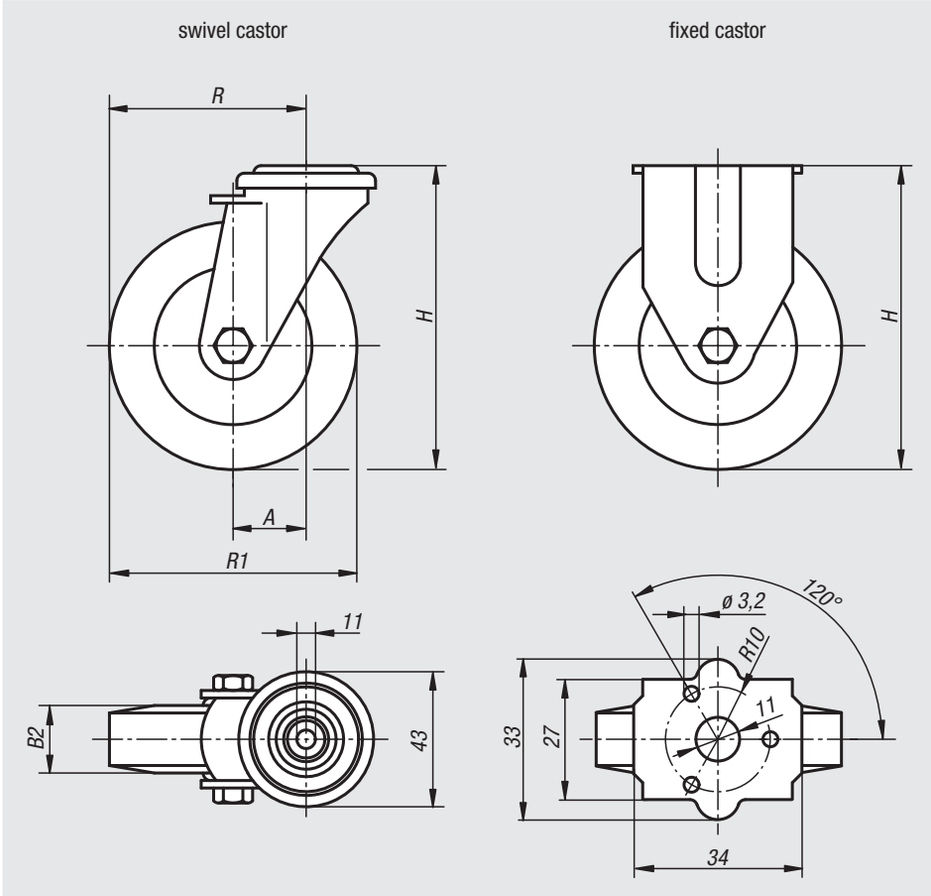

Material:
Housing steel plate.
Wheels with thermoplastic rubber tread.
Wheel body polypropylene.

Version:
Housing press formed.
Double ball bearing in the castor head.
Plain bearing in wheels.

Sample order:
nlm 95010-1105019

Note:
Wheel axle threaded. Swivel and fixed castors with bolt hole. Electrically conductive wheels, non-marking grey. The ohmic resistance of the wheel is less than $10^4\Omega$.

Application:
Electrically conductive wheels on swivel and fixed castors are used to protect against electrostatic discharge generated by transport equipment or the transported goods. Damage to sensitive goods and painful electrostatic shocks to the personal is so prevented.

Temperature range:
-20 °C to +60 °C.

swivel head bearing

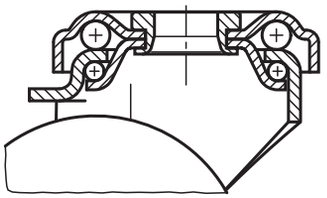

Order No. fixed castors	Order No. swivel castors	Order No. with stop-fix	Wheel bearing	A	B2	H	R	R1	Permissible load kg
95010-11050191	**95010-1105019**	**95010-11050192**	plain bearing	-/25/25	19	69	-/50/50	50	30
95010-11075251	**95010-1107525**	**95010-11075252**	plain bearing	-/29/29	25	98	-/66,5/66,5	75	50
-	**95010-1110025**	**95010-11100252**	plain bearing	33/33	25	121	83/83	100	60

Swivel and fixed castors

heavy-duty version

Material:
Housing steel plate.
Wheel treads solid rubber.
Wheel rims polyamide.

Version:
Housing press formed.
Double ball bearing in the castor head.
Plain bearing in wheels.

Sample order:
nlm 95012-10032

Note:
Wheel axle bolted.
Solid rubber tyres are shock and impact proof and non-corroding.

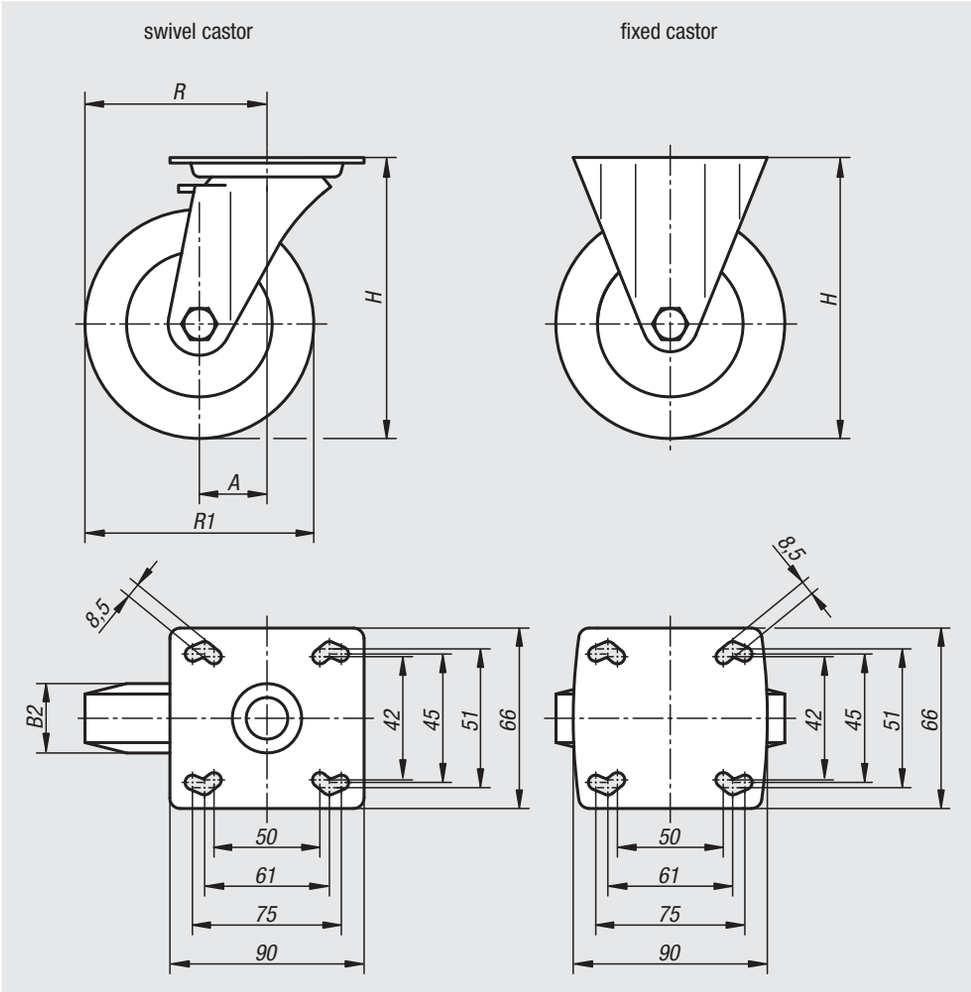

swivel head bearing

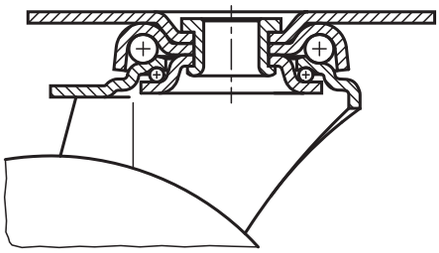

Order No. fixed castors	Order No. swivel castors	Order No. with stop-fix	Wheel bearing	A	B2	H	R	R1	Permissible load kg
95012-080251	**95012-08025**	**95012-080252**	plain bearing	-/40/40	25	111	-/80/80	80	60
95012-100321	**95012-10032**	**95012-100322**	plain bearing	-/40/40	32	136	-/90/90	100	90
95012-125251	**95012-12525**	**95012-125252**	plain bearing	-/40/40	25	161	-/102,5/102,5	125	80
95012-125321	**95012-12532**	**95012-125322**	plain bearing	-/40/40	32	161	-/102,5/102,5	125	100

Swivel and fixed castors

steel plate, electrically conductive, heavy-duty version

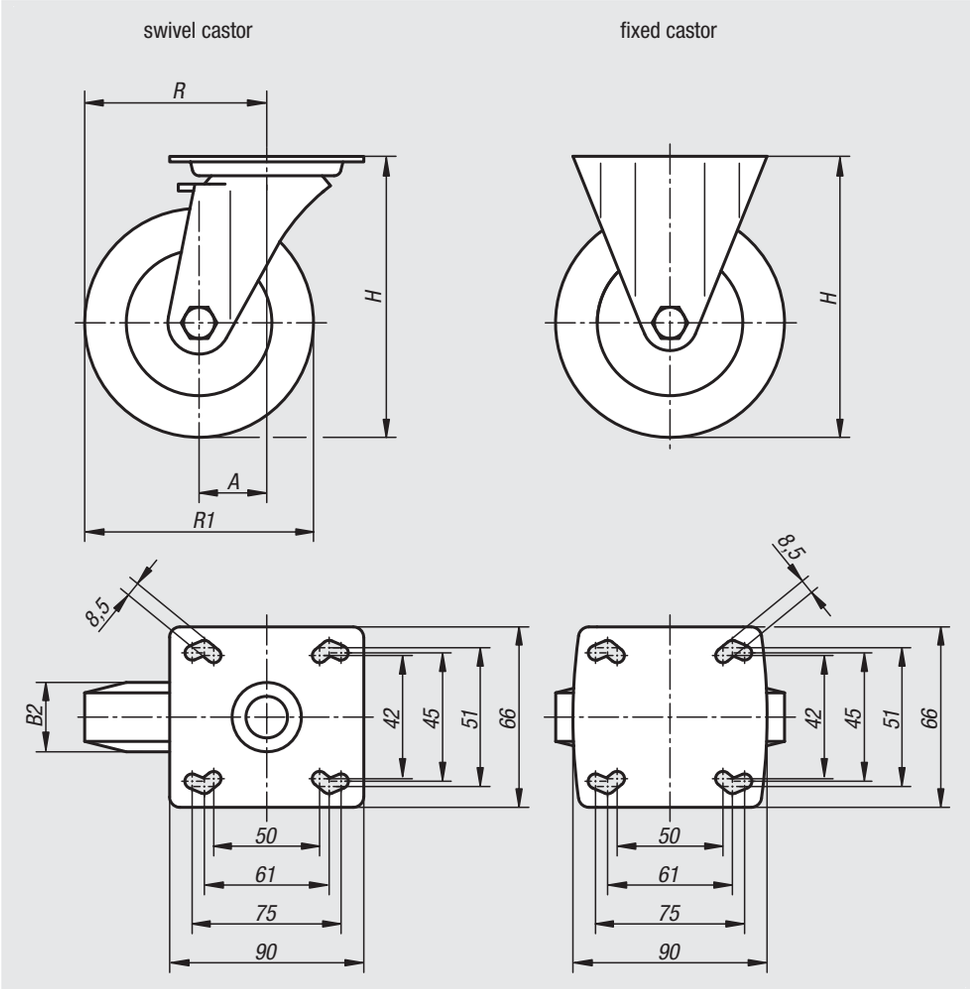

Material:
Housing steel plate.
Wheels with thermoplastic rubber tread.
Wheel body polypropylene.

Version:
Housing press formed.
Double ball bearing in the castor head.
Plain bearing in wheels.

Sample order:
nlm 95012-1108032

Note:
Wheel axle threaded. Swivel and fixed castors with mounting plate. Electrically conductive wheels, non-marking grey. The ohmic resistance of the wheel is less than $10^4\Omega$.

Application:
Electrically conductive wheels on swivel and fixed castors are used to protect against electrostatic discharge generated by transport equipment or the transported goods. Damage to sensitive goods and painful electrostatic shocks to the personal is so prevented.

Temperature range:
-20 °C to +60 °C.

swivel head bearing

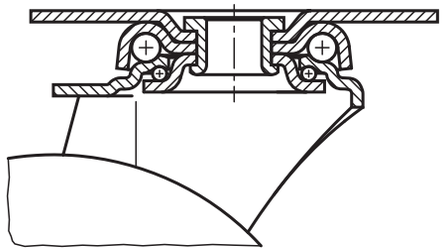

Order No. fixed castors	Order No. swivel castors	Order No. with stop-fix	Wheel bearing	A	B2	H	R	R1	Permissible load kg
95012-11080321	**95012-1108032**	**95012-11080322**	plain bearing	-/40/40	32	111	-/80/80	80	65
95012-11100321	**95012-1110032**	**95012-11100322**	plain bearing	-/40/40	32	136	-/90/90	100	70
95012-11125321	**95012-1112532**	**95012-11125322**	plain bearing	-/40/40	32	161	-/102,5/102,5	125	80

Swivel and fixed castors

standard version

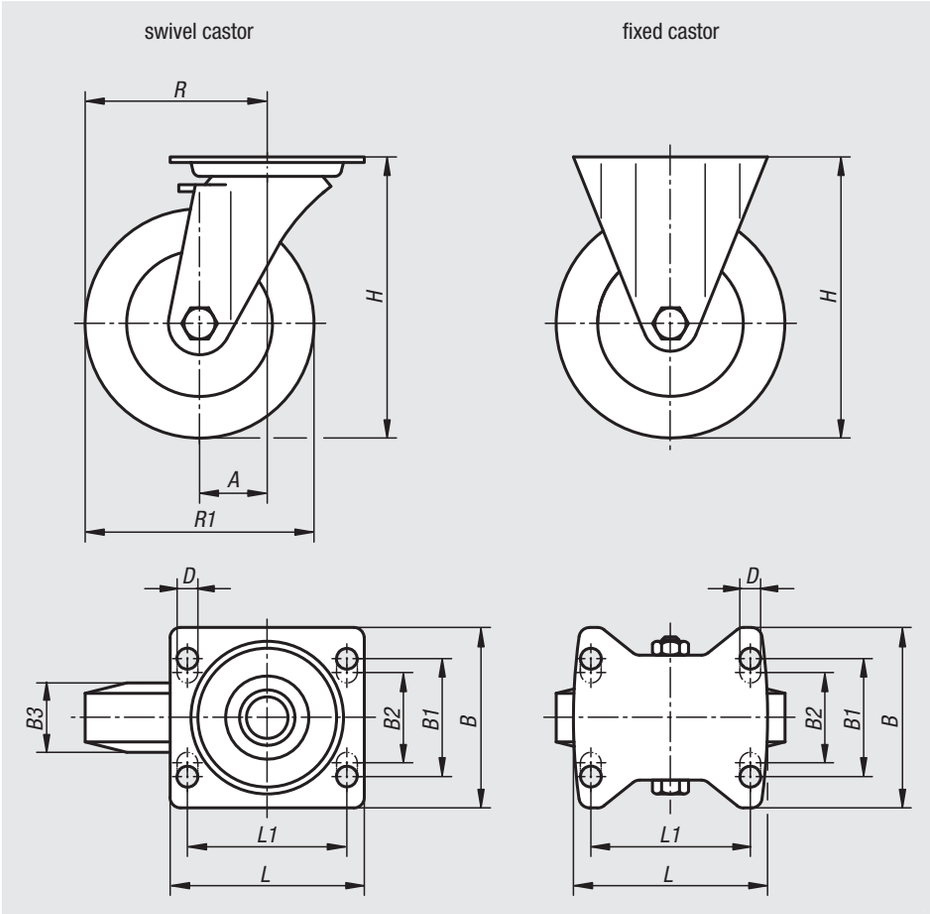

Material:
Housing and wheel rim steel plate.
Tyres solid rubber.
Wheel hub steel tube.

Version:
Housing and rim press formed.
Double ball bearing with ball shield in castor head.
Roller bearings in the wheels.

Sample order:
nlm 95016-10030

Note:
Wheel axle bolted.

swivel head bearing

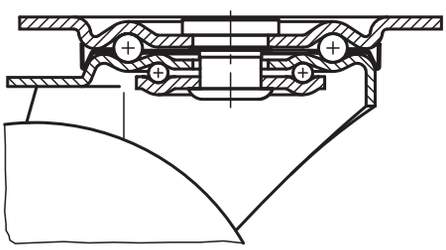

Order No. fixed castors	Order No. swivel castors	Order No. with stop-fix	Wheel bearing	A	B	B1	B2	B3	L	L1	H	D	R	R1	Permissible load kg
95016-125381	**95016-12538**	**95016-125382**	roller bearing	-/40/40	85	60	-	37,5	100	80	150	9	-/102,5/102,5	125	100
95016-200501	**95016-20050**	**95016-200502**	roller bearing	-/65/65	110	80	75	50	140	105	235	11	-/165/165	200	205
95016-080251	**95016-08025**	**95016-080252**	roller bearing	-/38/38	85	60	-	25	100	80	102	9	-/78/78	80	50
95016-100301	**95016-10030**	**95016-100302**	roller bearing	-/36/36	85	60	-	30	100	80	125	9	-/86/86	100	70
95016-160401	**95016-16040**	**95016-160402**	roller bearing	-/60/60	110	80	75	40	140	105	195	11	-/140/140	160	135

Swivel and fixed castors

steel plate, electrically conductive standard version

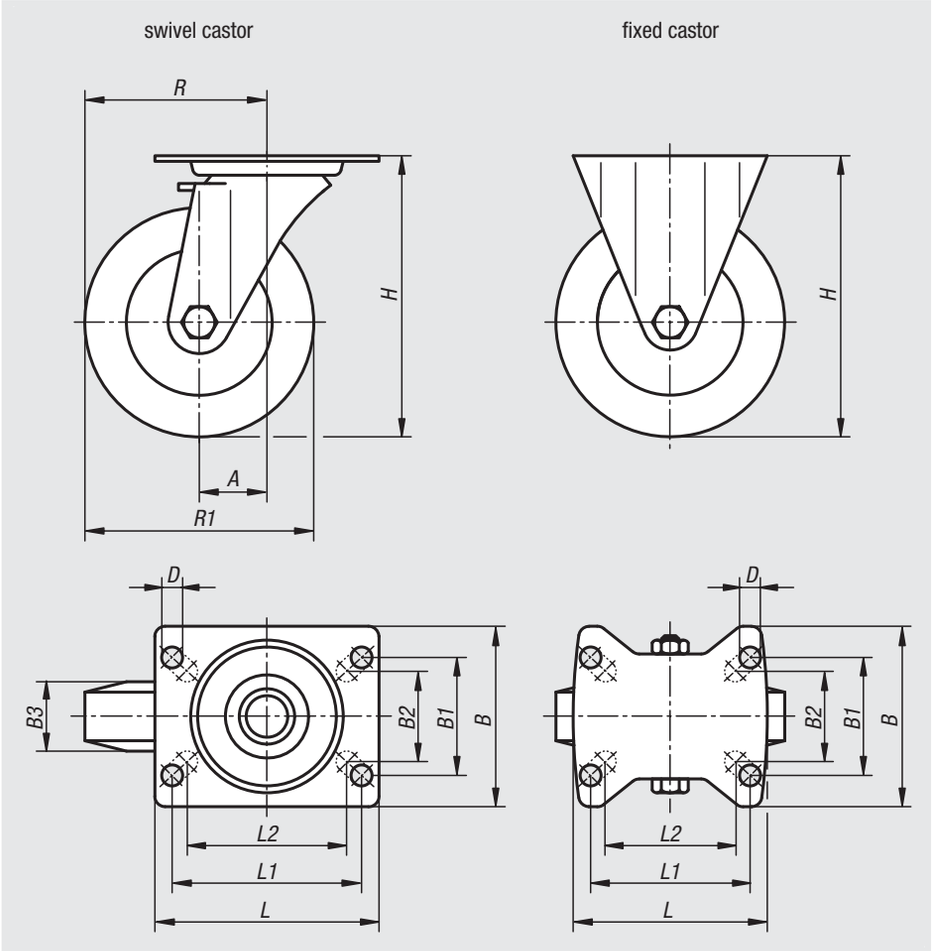

Material:
Housing steel plate.
Wheels with thermoplastic rubber tread.
Wheel body polypropylene.

Version:
Housing press formed.
Double ball bearing in the castor head.
Plain bearing in wheels.

Sample order:
nlm 95016-1108032

Note:
Wheel axle threaded. Swivel and fixed castors with mounting plate. Electrically conductive wheels, non-marking grey. The ohmic resistance of the wheel is less than $10^4\Omega$.

Application:
Electrically conductive wheels on swivel and fixed castors are used to protect against electrostatic discharge generated by transport equipment or the transported goods. Damage to sensitive goods and painful electrostatic shocks to the personal is so prevented.

Temperature range:
-20 °C to +60 °C.

swivel head bearing:

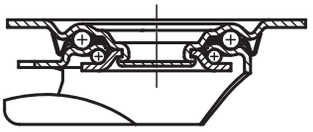

Order No. fixed castors	Order No. swivel castors	Order No. with stop-fix	Wheel bearing	A	B	B1	B2	B3	L	L1	L2	H	D	R	R1	Permissible load kg
95016-11080321	**95016-1108032**	**95016-11080322**	plain bearing	-/38/38	85	60	55	32	100	80	76	102	9	-/78/78	80	65
95016-11100321	**95016-1110032**	**95016-11100322**	plain bearing	-/36/36	85	60	55	32	100	80	76	125	9	-/86/86	100	70
95016-11125321	**95016-1112532**	**95016-11125322**	plain bearing	-/40/40	85	60	55	32	100	80	76	150	9	-/102,5/102,5	125	80
95016-11160401	**95016-1116040**	**95016-11160402**	plain bearing	-/54/54	110	80	75	40	140	105	-	195	11	-/134/134	160	130
95016-11200401	**95016-1120040**	**95016-11200402**	plain bearing	-/54/54	110	80	75	40	140	105	-	235	11	-/154/154	200	160

Swivel and fixed castors

standard version

Material:
Housing steel plate.
Wheel body PA 6 with vulcanised elastic solid rubber tyre.

Version:
Housing press formed.
Double ball bearing with ball shield in castor head.
Roller bearings in the wheels.

Sample order:
nlm 95018-12537

Note:
Wheel axle bolted.
Wheels are shock and impact proof.

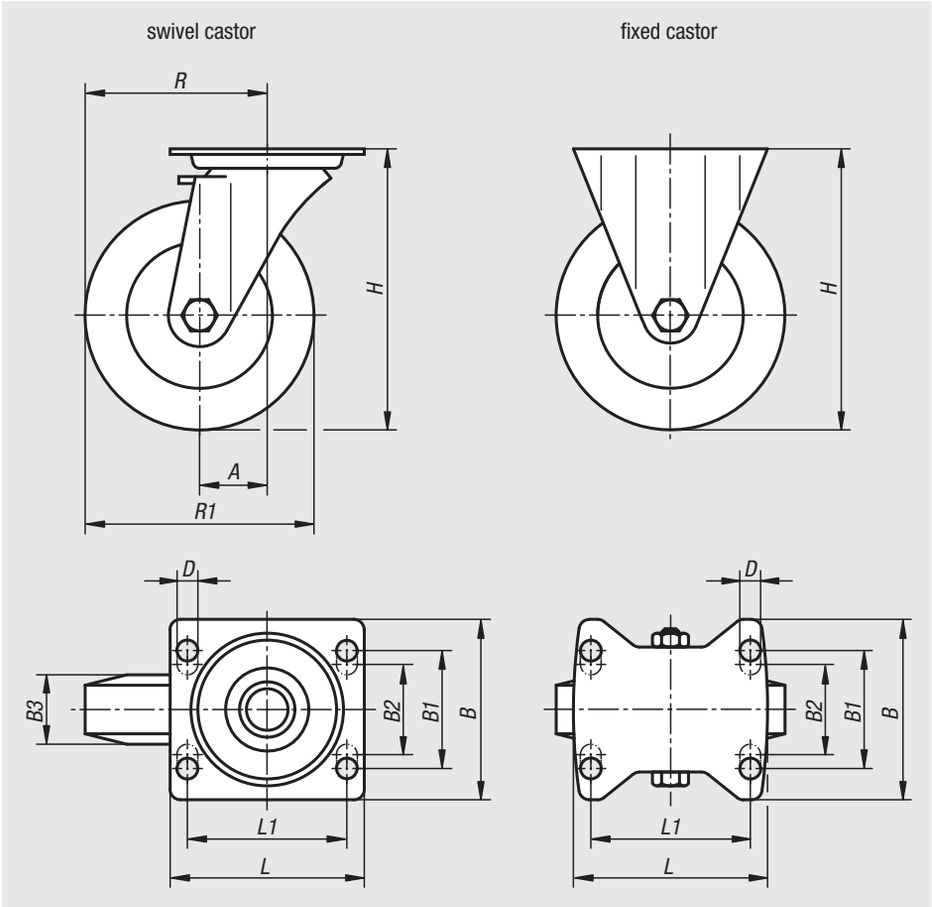

swivel head bearing

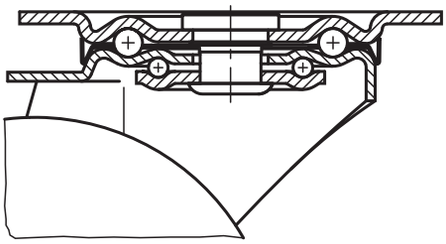

Order No. fixed castors	Order No. swivel castors	Order No. with stop-fix	Wheel bearing	A	B	B1	B2	B3	L	L1	H	D	R	R1	Permissible load kg
95018-100371	**95018-10037**	**95018-100372**	roller bearing	-/36/36	85	60	-	38	100	80	125	9	-/86/86	100	170
95018-125371	**95018-12537**	**95018-125372**	roller bearing	-/40/40	85	60	-	40	100	80	150	9	-/102,5/102,5	125	200
95018-160501	**95018-16050**	**95018-160502**	roller bearing	-/60/60	110	80	75	50	140	105	195	11	-/140/140	160	350
95018-200501	**95018-20050**	**95018-200502**	roller bearing	-/65/65	110	80	75	50	140	105	235	11	-/165/165	200	400

Swivel and fixed castors

heavy-duty version

Material:
Housing thick steel plate.
Tyres steel-wire reinforced elastic solid rubber.
Wheel body welded steel.

Version:
Housing press formed.
Reinforced fork, base plate and centre pin.
Double ball bearing with hardened shells in the castor head.
Precision ball bearings in the wheels.

Sample order:
nlm 95020-12550

Note:
These castors are particularly impact and shock proof and assure a high service life.
Wheel axle bolted.

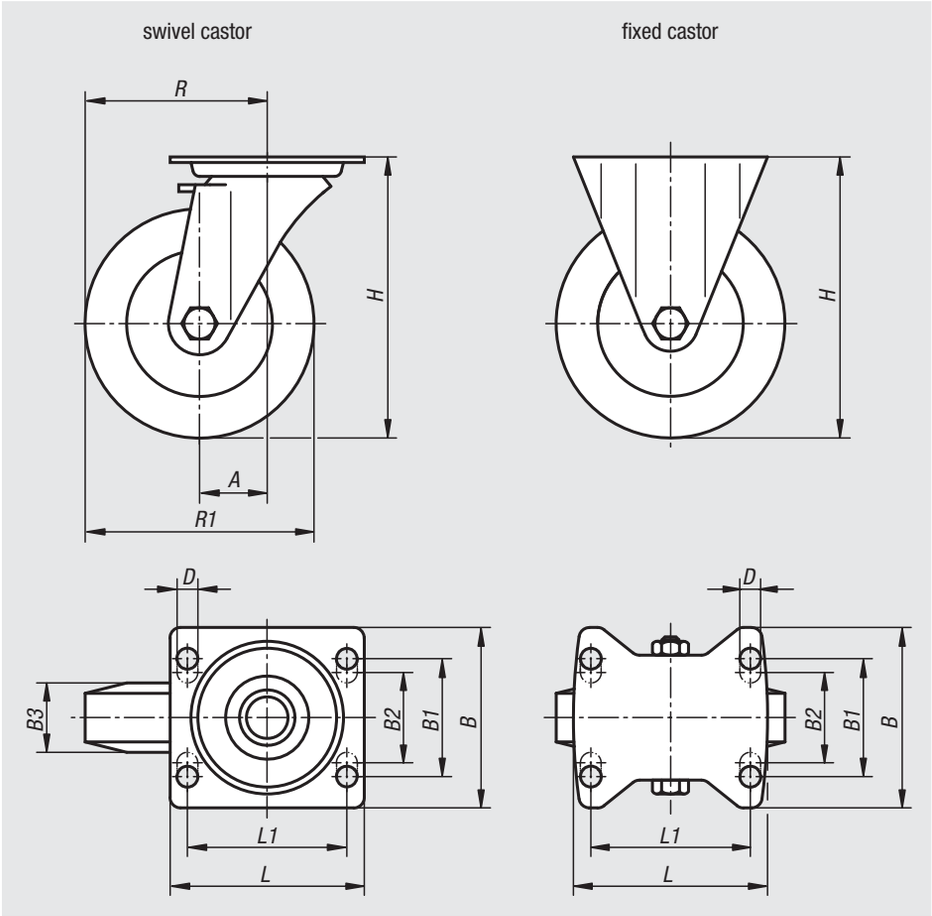

swivel head bearing

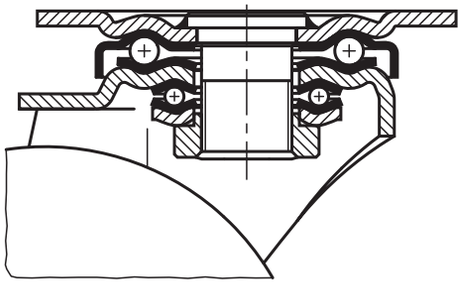

Order No. fixed castors	Order No. swivel castors	Order No. with stop-top	Wheel bearing	A	B	B1	B2	B3	L	L1	H	D	R	R1	Permissible load kg
95020-100401	**95020-10040**	**95020-100402**	ball bearing	-/45/45	85	60	-	40	100	80	140	9	-/95/95	100	180
95020-125501	**95020-12550**	**95020-125502**	ball bearing	-/55/55	110	80	75	50	140	105	170	11	-/117,5/117,5	125	280
95020-160501	**95020-16050**	**95020-160502**	ball bearing	-/65/65	110	80	75	50	140	105	202	11	-/145/145	160	400
95020-200501	**95020-20050**	**95020-200502**	ball bearing	-/70/70	110	80	75	50	140	105	245	11	-/170/170	200	500
95020-250601	**95020-25060**	**95020-250602**	ball bearing	-/82/82	110	80	75	60	140	105	295	11	-/207/207	250	700

Swivel and fixed castors

standard version

Material:
Housing steel plate.
Wheel body PA 6 with abrasion-resistant polyurethane tread.

Version:
Housing press formed.
Double ball bearing with ball shield in the castor head.
Plain bearing in the wheels.

Sample order:
nlm 95024-12535

Note:
The wheels are unbreakable, maintenance-free and non-corroding. Wheel axle bolted. Tread non-marking.

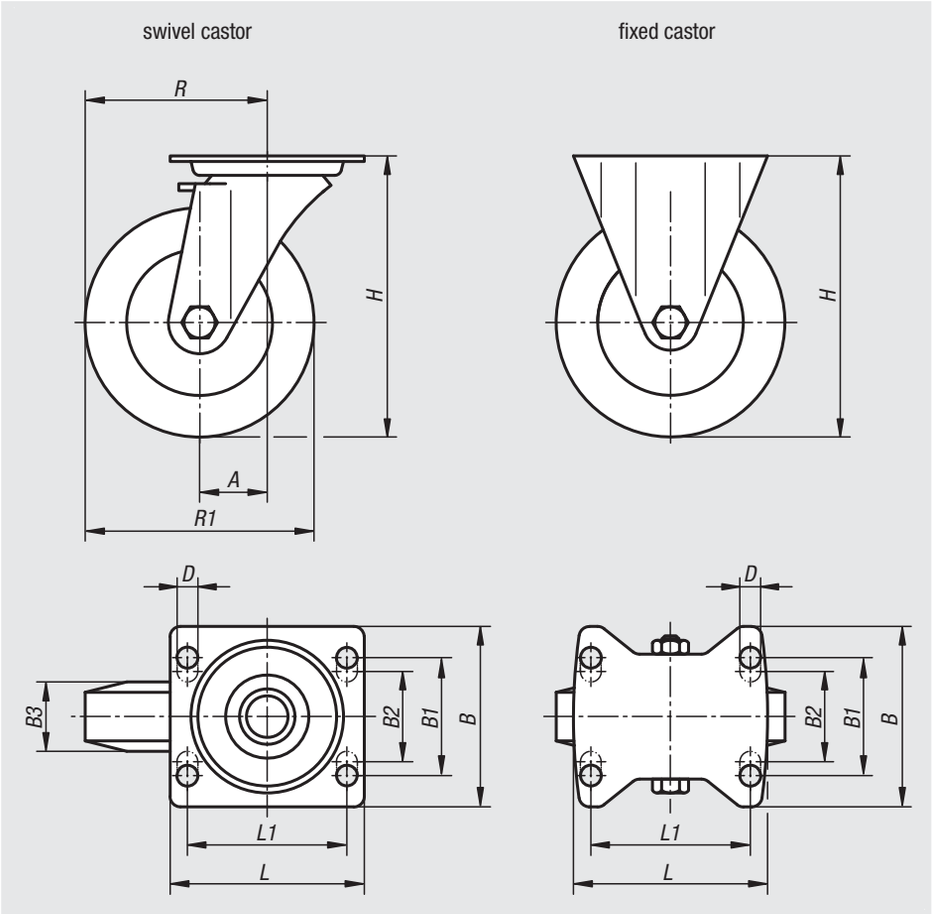

swivel head bearing

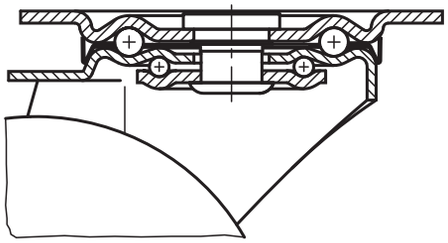

Order No. fixed castors	Order No. swivel castors	Order No. with stop-fix	Wheel bearing	A	B	B1	B2	B3	L	L1	H	D	R	R1	Permissible load kg
95024-100351	**95024-10035**	**95024-100352**	plain bearing	-/36/36	85	60	-	35	100	80	125	9	-/86/86	100	200
95024-125351	**95024-12535**	**95024-125352**	plain bearing	-/40/40	85	60	-	40	100	80	150	9	-/102,5/102,5	125	200
95024-150401	**95024-15040**	**95024-150402**	plain bearing	-/60/60	110	80	75	45	140	105	190	11	-/135/135	150	400
95024-200501	**95024-20050**	**95024-200502**	plain bearing	-/65/65	110	80	75	50	140	105	235	11	-/165/165	200	400

Swivel and fixed castors

medium-duty version

Material:
Housing steel plate.
Wheel body die-cast aluminium with Extrathane® tread.

Version:
Housing press formed.
Double ball bearing with ball shield in the castor head.
Precision ball bearings in the wheels.

Sample order:
nlm 95028-12540

Note:
The wheels are non-corroding and have a low rolling resistance. Wheel axle bolted.

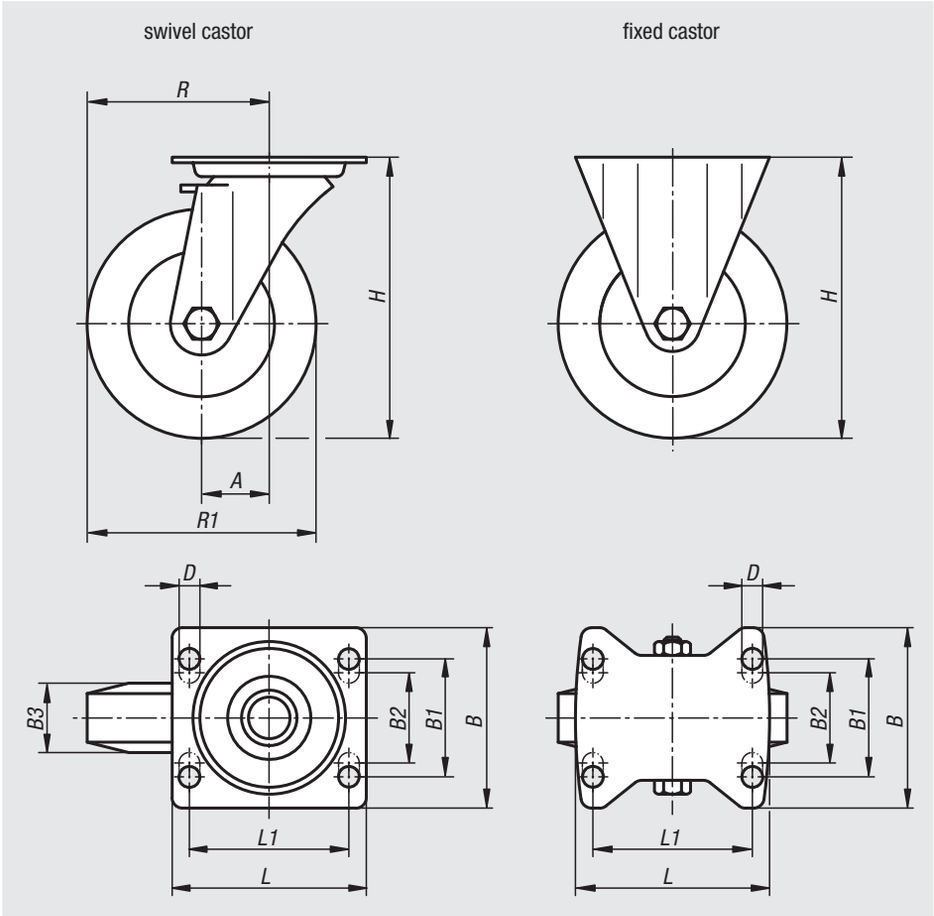

swivel head bearing R1 ≤ 125

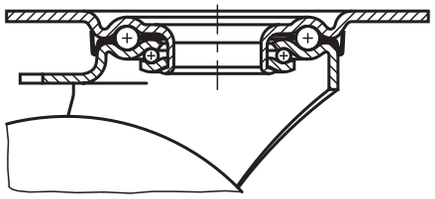

swivel head bearing R1 ≥ 160

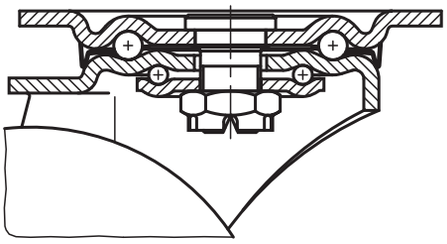

Order No. fixed castors	Order No. swivel castors	Order No. with stop-top	Wheel bearing	A	B	B1	B2	B3	L	L1	H	D	R	R1	Permissible load kg
95028-100401	**95028-10040**	**95028-100402**	ball bearing	-/45/45	85	60	-	40	100	80	130	9	-/95/95	100	250
95028-125401	**95028-12540**	**95028-125402**	ball bearing	-/48/48	85	60	-	40	100	80	155	9	-/110,5/110,5	125	250
95028-160501	**95028-16050**	**95028-160502**	ball bearing	-/63/63	110	80	75	50	140	105	202	11	-/143/143	160	550
95028-200501	**95028-20050**	**95028-200502**	ball bearing	-/70/70	110	80	75	50	140	105	245	11	-/170/170	200	800

Swivel and fixed castors

heavy-duty version

Material:
Housing thick steel plate.
Wheels welded steel body and Extrathane® tread.

Version:
Housing press formed.
Swivel castor housing with strong fork and base plate, very robust centre pin bolted and secured. The swivel head is additionally reinforced with specially formed and hardened bearing shells.

Sample order:
nlm 95030-16050

Note:
These castors are particularly shock and impact proof. The treads resist abrasion and are elastic and low-noise. Wheel axle bolted.

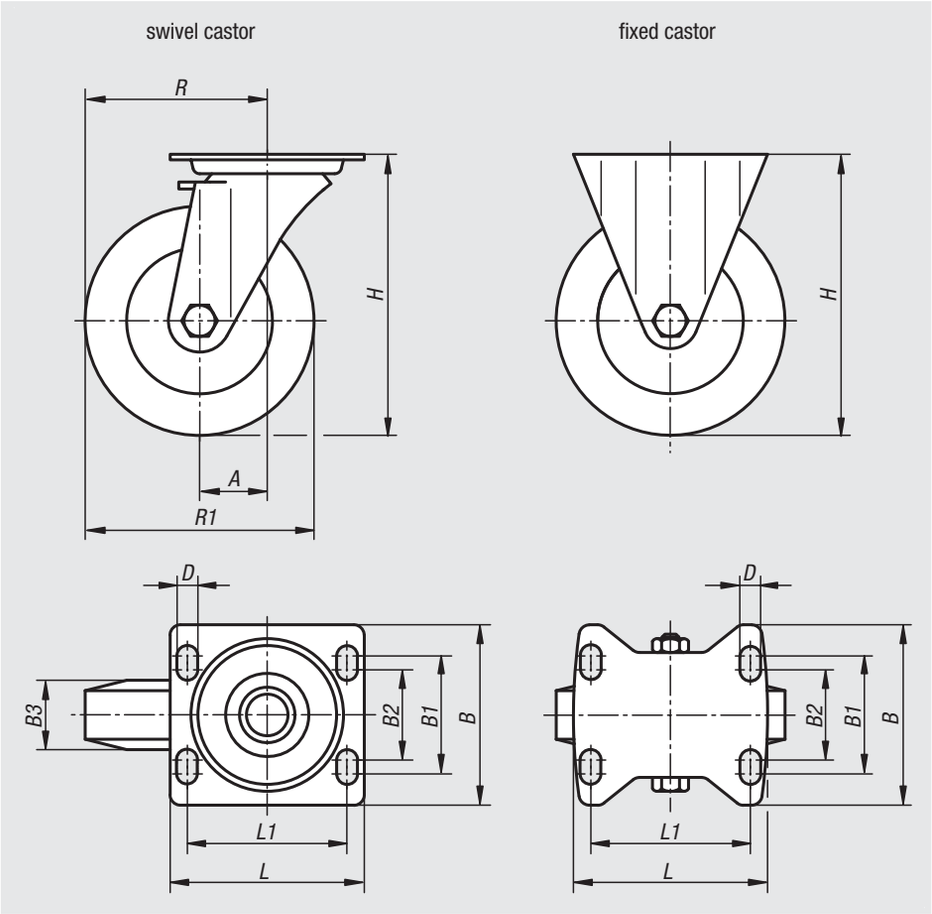

swivel head bearing

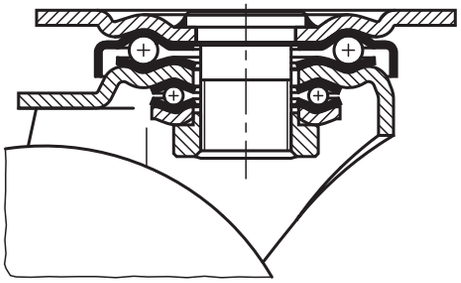

Order No. fixed castors	Order No. swivel castors	Order No. with stop-top	Wheel bearing	A	B	B1	B2	B3	L	L1	H	D	R	R1	Permissible load kg
95030-125501	**95030-12550**	**95030-125502**	ball bearing	-/55/55	110	80	75	50	140	105	170	11	-/117,5/117,5	125	500
95030-160501	**95030-16050**	**95030-160502**	ball bearing	-/65/65	110	80	75	50	140	105	202	11	-/145/145	160	700
95030-200501	**95030-20050**	**95030-200502**	ball bearing	-/70/70	110	80	75	50	140	105	245	11	-/170/170	200	900

Swivel and fixed castors

welded steel heavy-duty version

Material:
Housing solid welded steel construction.
Wheels with welded steel body and Extrathane® tread.

Version:
The housing is a rugged welded steel construction.
Swivel castor housing with DIN 711 axial groove ball bearing and DIN 720 tapered roller bearing in the swivel head. Dust and splash-proof, with grease nipple. Precision ball bearings in the wheels.

Sample order:
nlm 95032-20050

Note:
Centre pin welded in, bolted and secured. Wheel axle bolted.

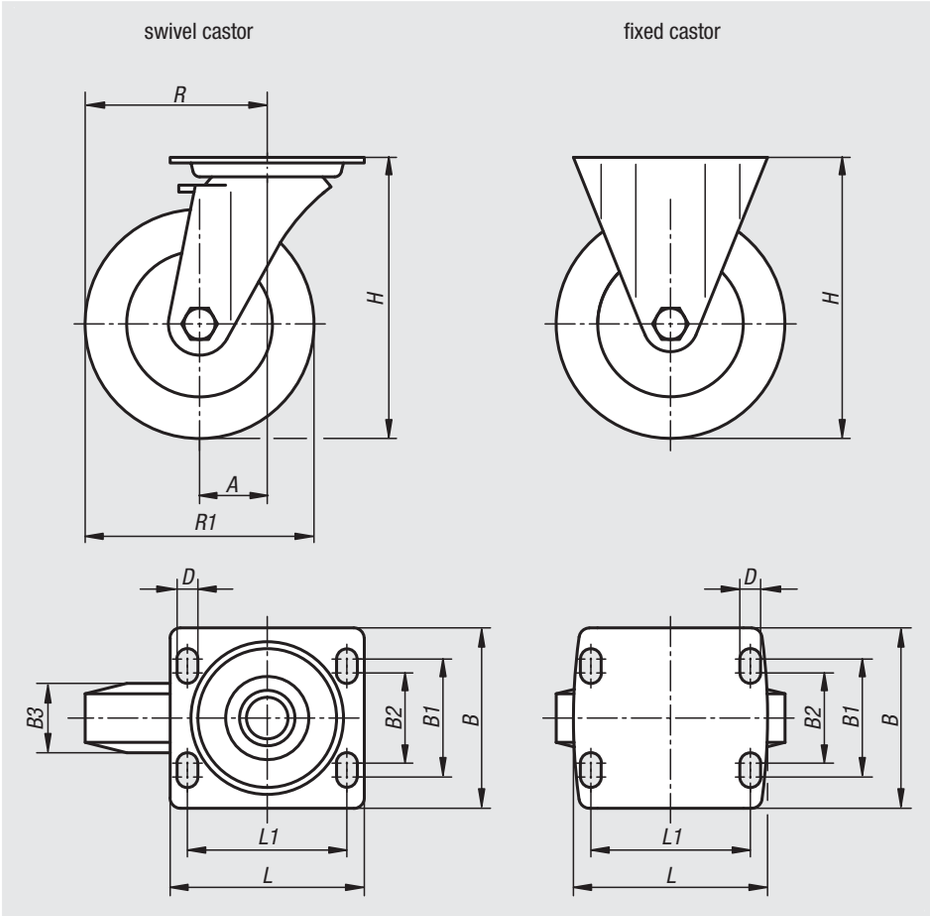

swivel head bearing

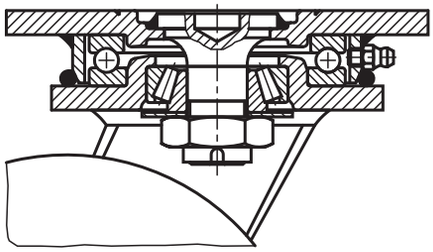

Order No. fixed castors	Order No. swivel castors	Order No. with stop-top	Wheel bearing	A	B	B1	B2	B3	L	L1	H	D	R	R1	Permissible load kg
95032-160501	**95032-16050**	**95032-160502**	ball bearing	-/55/55	110	80	75	50	140	105	205	11	-/135/135	160	700
95032-200501	**95032-20050**	**95032-200502**	ball bearing	-/60/60	110	80	75	50	140	105	245	11	-/160/160	200	1000
95032-250601	**95032-25060**	**95032-250602**	ball bearing	-/75/75	140	105	-	60	175	140	305	14	-/200/200	250	1350

Swivel and fixed castors

standard version

Material:
Housing steel plate.
Wheels PA 6.

Version:
Housing press formed.
Double ball bearing with ball shield in the castor head.
Plain bearings in the wheels.

Sample order:
nlm 95034-10037

Note:
The PA 6 wheels have a low rolling resistance, are non-corroding, resist abrasion and are particularly shock and impact proof.

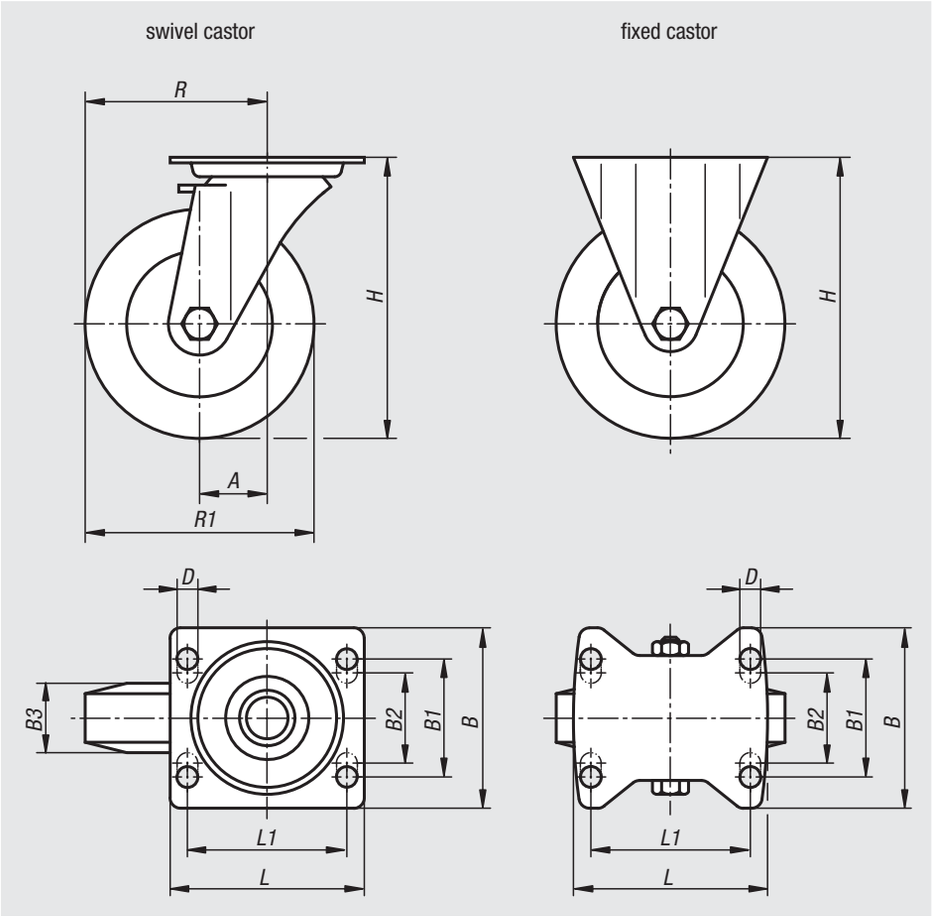

swivel head bearing

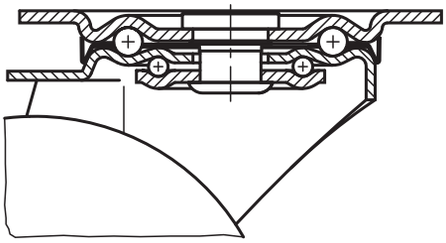

Order No. fixed castors	Order No. swivel castors	Order No. with stop-fix	Wheel bearing	A	B	B1	B2	B3	L	L1	H	D	R	R1	Permissible load kg
95034-075321	**95034-07532**	**95034-075322**	plain bearing	-/35/35	85	60	-	32	100	80	98	9	-/72,5/72,5	75	200
95034-100371	**95034-10037**	**95034-100372**	plain bearing	-/35/35	85	60	-	37	100	80	125	9	-/85/85	100	200
95034-125401	**95034-12540**	**95034-125402**	plain bearing	-/40/40	85	60	-	40	100	80	150	9	-/102,5/102,5	125	200
95034-150501	**95034-15050**	**95034-150502**	plain bearing	-/60/60	110	80	75	50	140	105	190	11	-/135/135	150	400

Swivel and fixed castors

heavy-duty version

Material:
Housing thick steel plate.
Wheels PA 6.

Version:
Housing press formed.
Swivel castor housing with strong fork and base plate, very robust centre pin bolted and secured. The swivel head is additionally reinforced with specially formed and hardened bearing shells. Plain bearings in the wheels.

Sample order:
nlm 95036-12540

Note:
Wheel axle bolted. The wheels are particularly shock and impact proof and have high abrasion resistance.

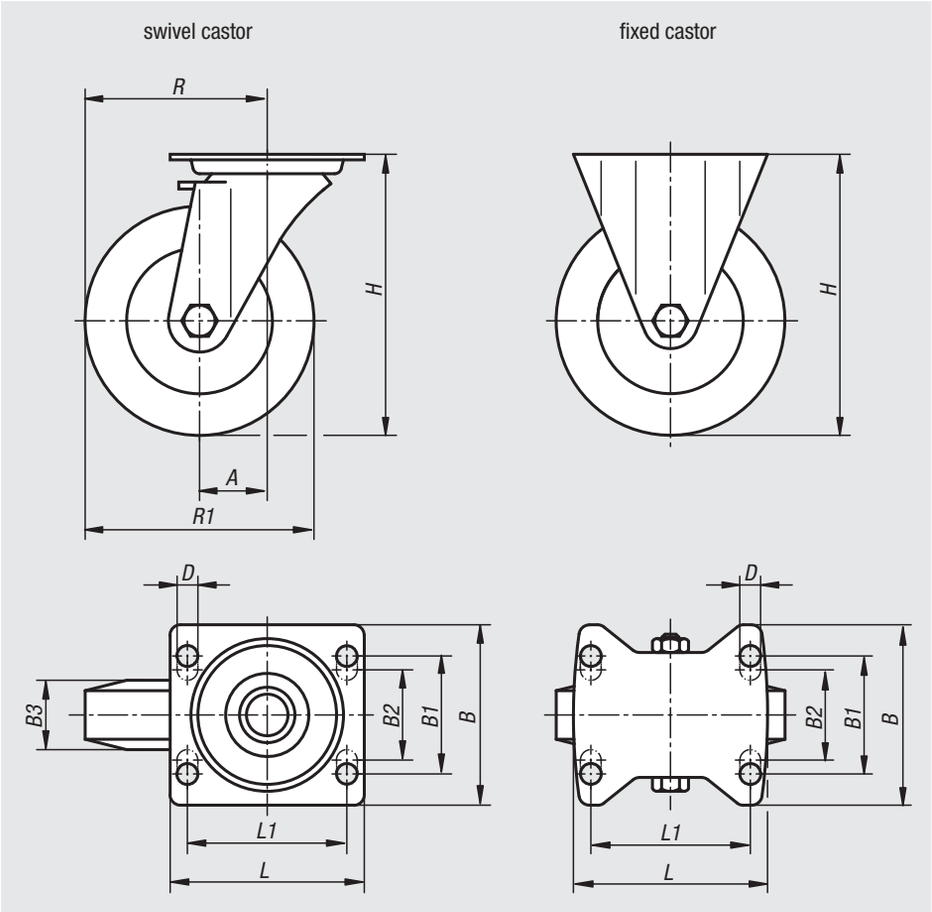

swivel head bearing

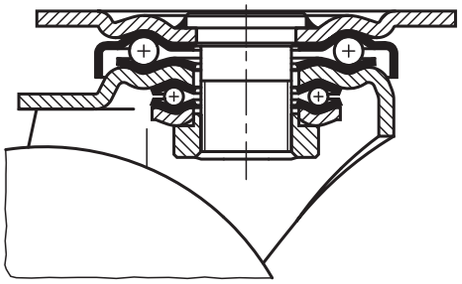

Order No. fixed castors	Order No. swivel castors	Order No. with stop-top	Wheel bearing	A	B	B1	B2	B3	L	L1	H	D	R	R1	Permissible load kg
95036-100371	**95036-10037**	**95036-100372**	plain bearing	-/45/45	85	60	-	37	100	80	140	9	-/95/95	100	280
95036-125401	**95036-12540**	**95036-125402**	plain bearing	-/45/45	85	60	-	40	100	80	165	9	-/107,5/107,5	125	300
95036-150501	**95036-15050**	**95036-150502**	plain bearing	-/65/65	110	80	75	50	140	105	197	11	-/140/140	150	400
95036-200501	**95036-20050**	**95036-200502**	plain bearing	-/70/70	110	80	75	50	140	105	245	11	-/170/170	200	600

Swivel and fixed castors

heavy-duty version

Material:
Housing thick steel plate.
Wheels high-quality PA 6.

Version:
Housing press formed.
Swivel castor housing with strong fork and base plate, very robust centre pin bolted and secured. The swivel head is additionally reinforced with specially formed and hardened bearing shells.

Sample order:
nlm 95040-10037

Note:
The hardened bearing shells make these castors particularly shock and impact proof. The wheels have high abrasion resistance. Wheel axle bolted.

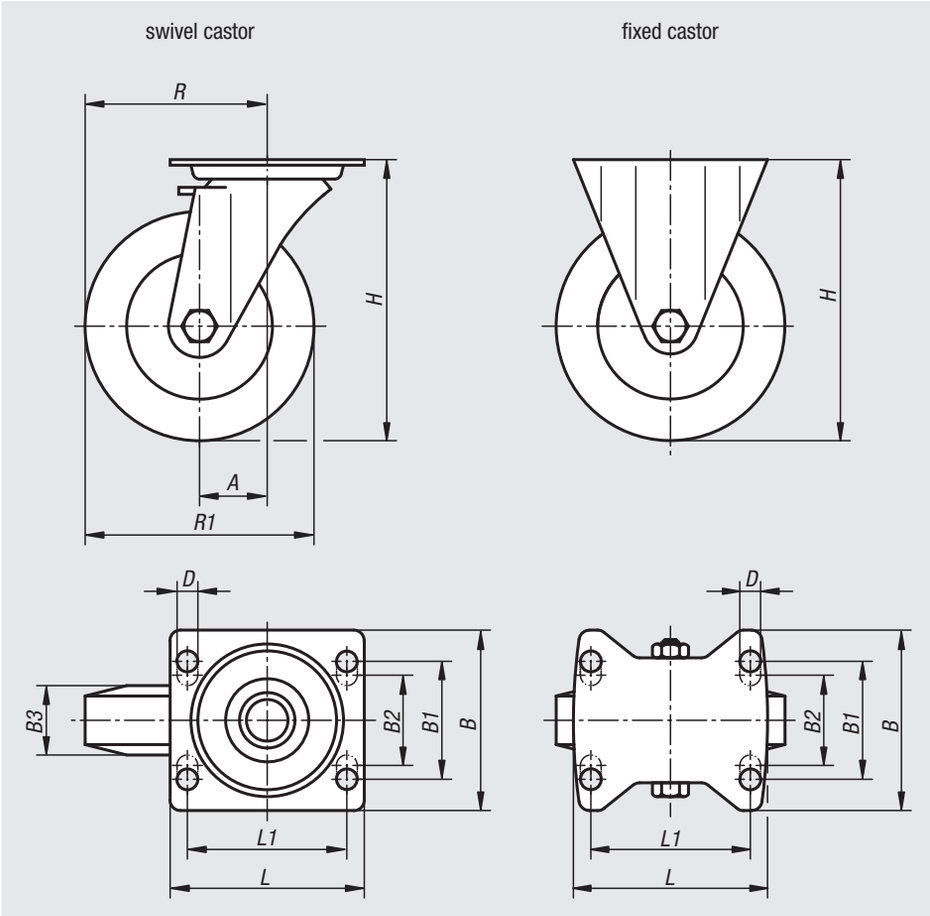

swivel head bearing

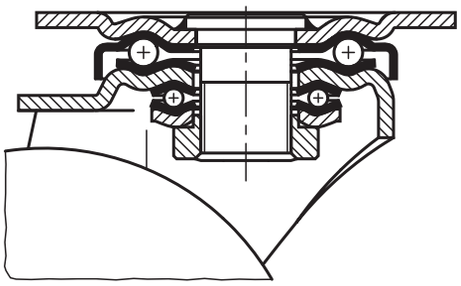

Order No. fixed castors	Order No. swivel castors	Order No. with stop-top	Wheel bearing	A	B	B1	B2	B3	L	L1	H	D	R	R1	Permissible load kg
95040-075321	**95040-07532**	**95040-075322**	plain bearing	-/45/45	85	60	-	32	100	80	118	9	-/82,5/82,5	75	300
95040-075324	**95040-075323**	**95040-075325**	ball bearing	-/45/45	85	60	-	32	100	80	118	9	-/82,5/82,5	75	300
95040-100371	**95040-10037**	**95040-100372**	plain bearing	-/45/45	85	60	-	37	100	80	140	9	-/95/95	100	500
95040-100374	**95040-100373**	**95040-100375**	ball bearing	-/45/45	85	60	-	37	100	80	140	9	-/95/95	100	500
95040-125401	**95040-12540**	**95040-125402**	plain bearing	-/45/45	85	60	-	40	100	80	165	9	-/107,5/107,5	125	700
95040-125404	**95040-125403**	**95040-125405**	ball bearing	-/45/45	85	60	-	40	100	80	165	9	-/107,5/107,5	125	700
95040-150501	**95040-15050**	**95040-150502**	plain bearing	-/65/65	110	80	75	50	140	105	197	11	-/140/140	150	800
95040-150504	**95040-150503**	**95040-150505**	ball bearing	-/65/65	110	80	75	50	140	105	197	11	-/140/140	150	800

Swivel castors

compact version

Material:
Housing steel plate, galvanized and blue passivated .
Roller light brown polyurethane, Shore 92 A
or white polyamide, Shore 80 D.

Version:
Housing press formed.
Swivel castor housing with 2x ball bearing in the swivel head and ball shield.
Roller with two pressed-in ball bearings.

Sample order:
nlm 95045-0352701

Note:
Wheel axle bolted.

Polyurethane roller: low-noise, low rolling resistance, elastic, floor-protecting, very wear resistant , non-staining.

Polyamide roller: very low roll and pivot resistance, smooth running on smooth floors, very wear resistant.

bolt hole

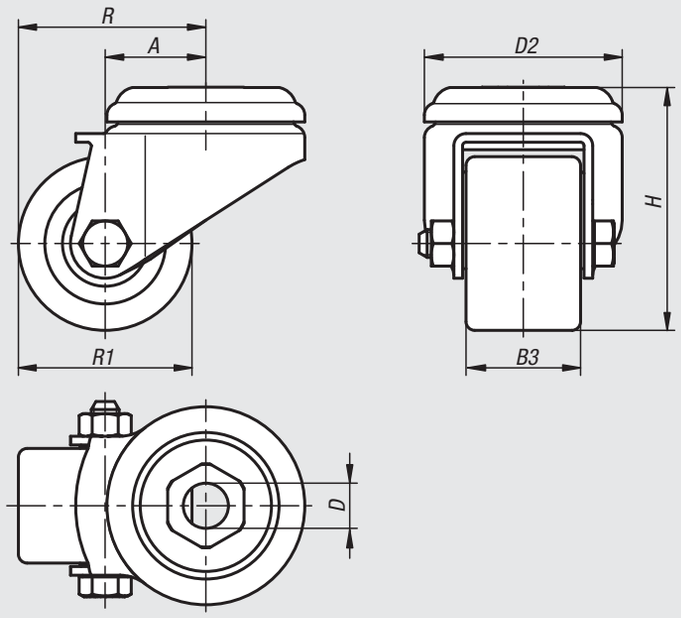

mounting plate

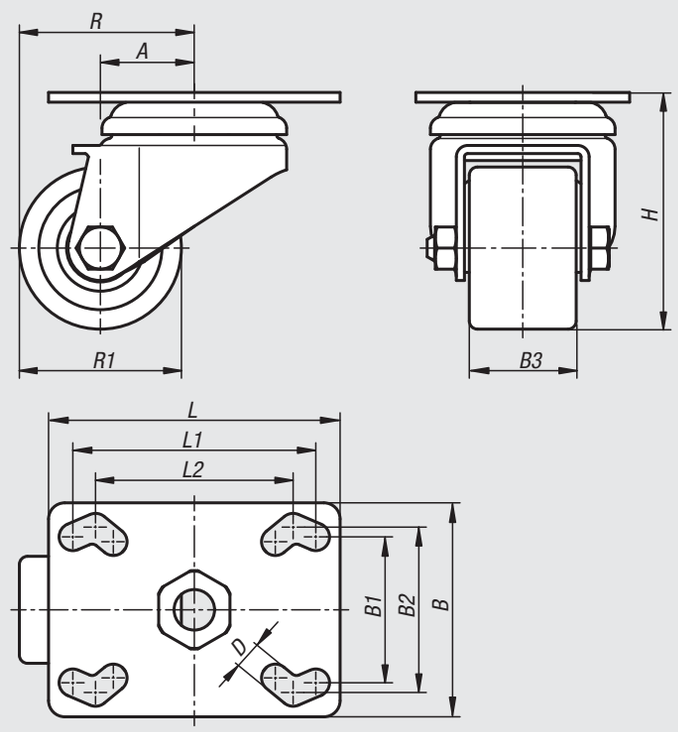

Swivel head bearing:
bolt hole

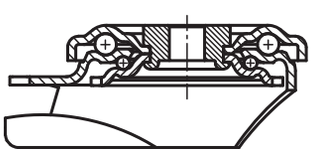

Swivel head bearing:
mounting plate

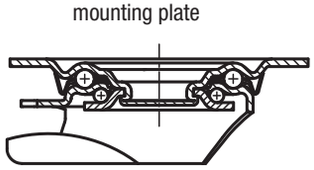

Order No.	Version	Material roller	Wheel bearing	D	D2	A	B	B1	B2	B3	H	L	L1	L2	R	R1	Permissible load kg
95045-0352701	with bolt hole	polyurethane	ball bearing	11	43	15	-	-	-	27	50	-	-	-	32,5	35	100
95045-0352802	with bolt hole	Polyamide	ball bearing	11	43	15	-	-	-	28	50	-	-	-	32,5	35	100
95045-0503301	with bolt hole	polyurethane	ball bearing	13	57	29	-	-	-	33	70	-	-	-	54	50	150
95045-0503202	with bolt hole	Polyamide	ball bearing	13	57	29	-	-	-	32	70	-	-	-	54	50	150
95045-0352711	with mounting plate	polyurethane	ball bearing	6,2	-	15	60	38	48	27	52	60	48	38	32,5	35	100
95045-0352812	with mounting plate	Polyamide	ball bearing	6,2	-	15	60	38	48	28	52	60	48	38	32,5	35	100
95045-0503311	with mounting plate	polyurethane	ball bearing	8,5	-	29	66	45	51	33	73	90	75	61	54	50	150
95045-0503212	with mounting plate	Polyamide	ball bearing	8,5	-	29	66	45	51	32	73	90	75	61	54	50	150

Wheels

rubber tyres on steel plate rims

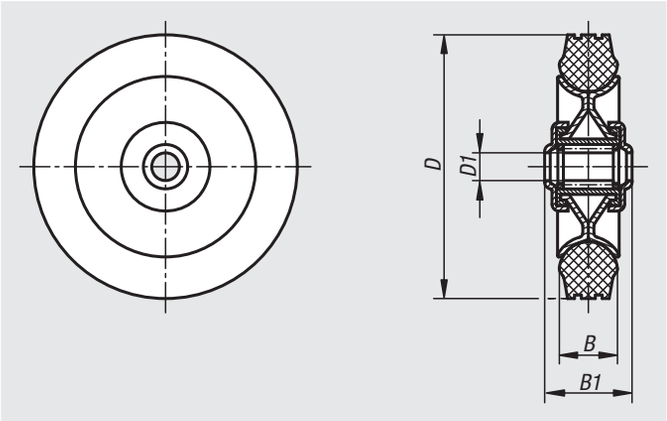

Material:
Rim steel plate.
Tyre solid rubber.

Version:
Rims galvanized and chromed.
Tyres black.

Sample order:
nlm 95050-14038

Note:
This special rim design is exceptionally ridged even with extreme shocks and impacts. Low rolling resistance.
Temperature resistant from -30 °C to +80 °C.
Suitable for 95016.

Order No.	Wheel bearing	D	D1	B	B1	Permissible load kg
95050-08025	roller bearing	80	12	25	35	50
95050-10030	roller bearing	100	15	30	45	70
95050-12538	roller bearing	125	15	37,5	45	100
95050-14038	roller bearing	140	15	37,5	45	115
95050-16040	roller bearing	160	20	40	60	135
95050-18050	roller bearing	180	20	50	60	170
95050-20050	roller bearing	200	20	50	60	205

95053

Wheels

rubber tyres on die-cast aluminium rims

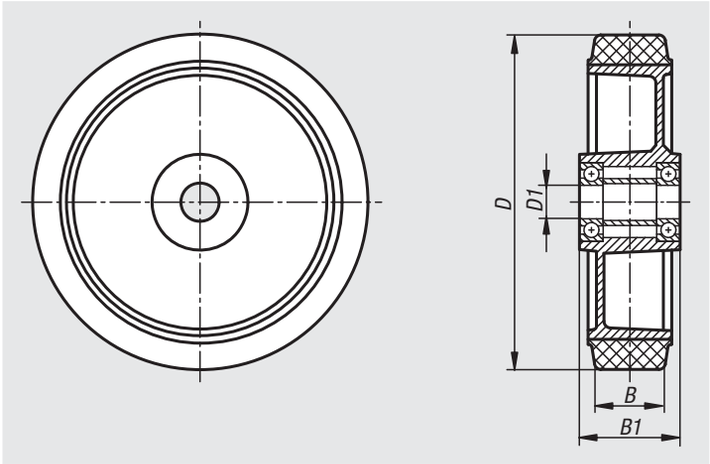

Material:
Wheel rims die-cast aluminium.
Tyre elastic solid rubber.

Sample order:
nlm 95053-200501

Note:
The tyre is vulcanised onto the rim. Wheels with elastic solid rubber tyres have a high wear resistance, low rolling resistance and excellent drive comfort.
Application temperature from -30 °C to +80 °C.
These wheels are used as the front wheels on fork-lift trucks.
Other sizes on request.

Order No.	Wheel bearing	D	D1	B	B1	Permissible load kg
95053-200501	ball bearing	200	20	35	60	450

95056

Wheels

polyamide with injection-moulded tread

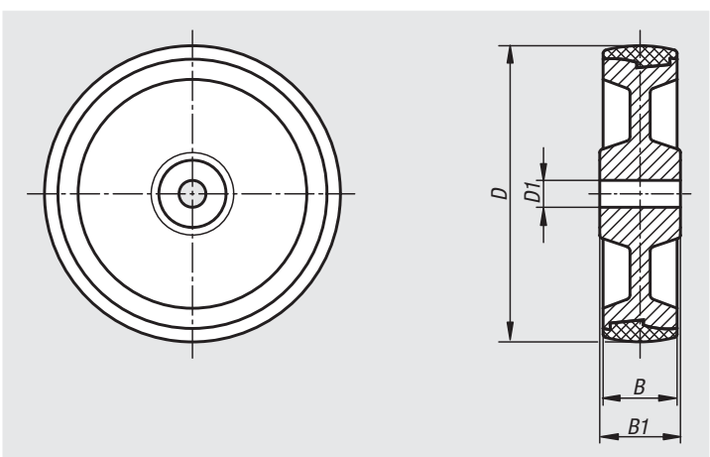

Material:
Wheel body PA.
Tread thermoplastic polyurethane elastomer.

Sample order:
nlm 95056-12535

Note:
Wheels with polyurethane tread have a high load capacity, resist abrasion, are gentle to floors, absorb shocks and vibration and are resistant to many chemicals and acids.
Temperature resistant from -30 °C to +80 °C.
Suitable for 95024.

Order No.	Wheel bearing	D	D1	B	B1	Permissible load kg
95056-10035	plain bearing	100	15	35	45	200
95056-12535	plain bearing	125	15	35	45	250
95056-15040	plain bearing	150	20	40	60	400
95056-20050	plain bearing	200	20	50	60	700

Guide rollers

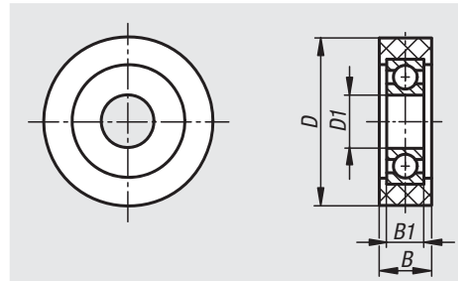

Material:
Tread light brown Extrathane® Shore 92A or white polyamide 6 Shore 80D.

Sample order:
nlm 95057-05015

Note:
The tread is firmly bonded onto a ball bearing.

Extrathane tread: quiet running, low roll resistance, elastic, gentle on floors, very wear resistant, high cut and tear resistance, non-marking, non-staining.

Polyamide 6 tread: unbreakable, very low roll resistance, light running on smooth floors, very wear resistant.
Uses: conveyor belts, doors, etc.
Other sizes on request.

Order No.	Material tread	Wheel bearing	D	D1	B	B1	Permissible load kg	Ball bearing
95057-03008	extrathane	ball bearing	30	6	8	6	20	626 2RS
95057-03514	extrathane	ball bearing	35	12	14	8	40	6001 2RS
95057-04020	extrathane	ball bearing	40	10	20	9	40	6000 2RS
95057-05015	extrathane	ball bearing	50	10	15	9	60	6200 2RS
95057-06020	extrathane	ball bearing	60	17	20	12	90	6203 2RS
95057-07020	extrathane	ball bearing	70	25	20	15	125	6205 2RS
95057-030081	polyamide 6	ball bearing	30	6	8	6	35	626 2RS
95057-035111	polyamide 6	ball bearing	35	8	11	7	55	608 2RS
95057-040201	polyamide 6	ball bearing	40	10	20	9	100	6200 2RS
95057-050151	polyamide 6	ball bearing	50	10	15	9	100	6200 2RS
95057-060201	polyamide 6	ball bearing	60	17	20	12	165	6203 2RS
95057-070201	polyamide 6	ball bearing	70	25	20	15	185	6205 2RS

95058

Wheels

aluminium rims with injection-moulded tread

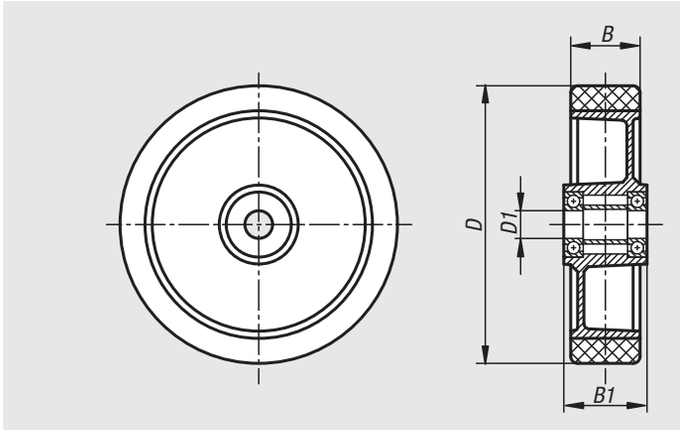

Material:
Wheel rim die-cast aluminium.
Tread Extrathane®.

Sample order:
nlm 95058-12540

Note:
These wheels are elastic, abrasion-resistant, gentle to floors, low-noise and have low roll resistance.
Suitable for 95028.

Order No.	Wheel bearing	D	D1	B	B1	Permissible load kg
95058-10040	ball bearing	100	15	40	45	250
95058-12540	ball bearing	125	15	40	45	350
95058-16050	ball bearing	160	20	50	60	550
95058-18050	ball bearing	180	20	50	60	600
95058-20050	ball bearing	200	20	50	60	800

95059

Rollers heavy-load

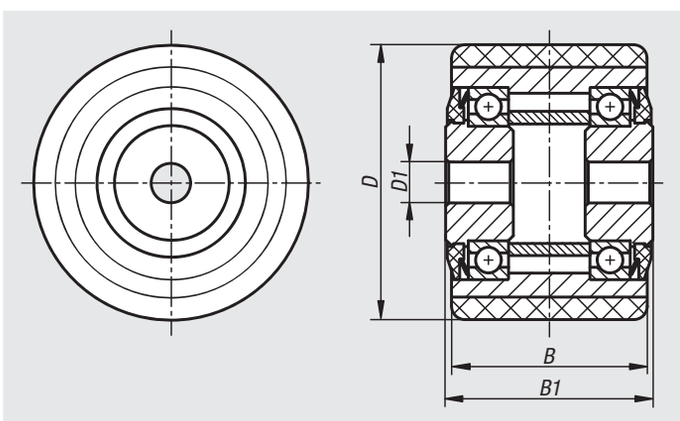

Material:
Wheel body steel tube with ball bearing.
Tread Extrathane® 92 Shore A.

Sample order:
nlm 95059-0857520

Note:
The ball bearing is splashproof. The tread is firmly bonded. These rollers resist abrasion, are non-staining, gentle to floors, low-noise, elastic, have low roll resistance and have a particularly high elastic restoration after long standing high cut and tear resistance.
Uses: pallet trucks, forklift, etc.
Other sizes on request.

Order No.	Wheel bearing	D	D1	B	B1	Permissible load kg
95059-0856020	ball bearing	85	20	60	65	450
95059-0856025	ball bearing	85	25	60	65	450
95059-0857520	ball bearing	85	20	75	80	570
95059-0857525	ball bearing	85	25	75	80	570
95059-0859525	ball bearing	85	25	95	100	720

95060

Wheels heavy-load

wheel body welded

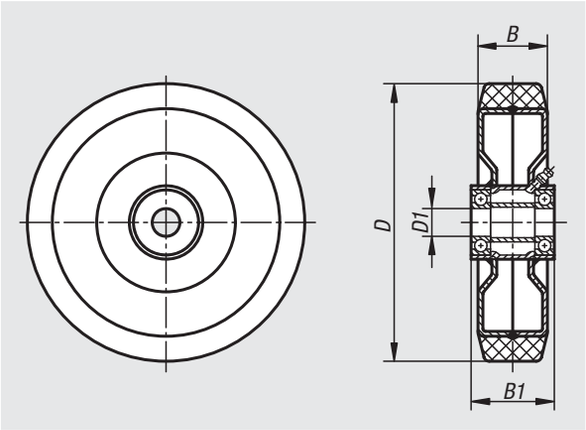

Material:
Wheel body welded steel construction.
Tread Extrathane®.

Sample order:
nlm 95060-16050

Note:
Extrathane treads are elastic, resist abrasion, gentle to floors, low-noise and have particularly high elastic restoration after long standing. The wheel is fitted with a grease nipple for bearing maintenance.
Application temperature from -40 °C to +80 °C.
Suitable for 95030 and 95032.

Order No.	Wheel bearing	D	D1	B	B1	Permissible load kg
95060-12550	ball bearing	125	20	50	60	500
95060-16050	ball bearing	160	20	50	60	700
95060-20050	ball bearing	200	20	50	60	1000
95060-25060	ball bearing	250	25	60	70	1350

95062

Wheels polyamide

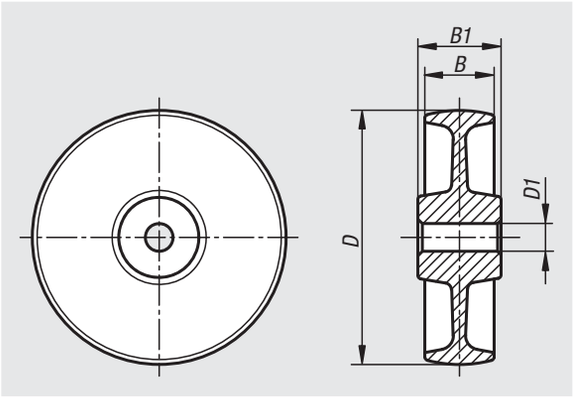

Material:
Polyamide

Sample order:
nlm 95062-12540

Note:
Polyamide wheels are unbreakable, non-corroding, shock and impact proof and chemical resistant.
They also have high abrasion resistance and low roll resistance.
Other sizes or with ball bearing on request.

Order No.	Wheel bearing	D	D1	B	B1	Permissible load kg
95062-07532	plain bearing	75	12	32	35	200
95062-10037	plain bearing	100	15	37	45	280
95062-12540	plain bearing	125	15	40	45	300
95062-15050	plain bearing	150	20	50	60	400
95062-20050	plain bearing	200	20	50	60	600

Wheels polyamide

heavy-duty version

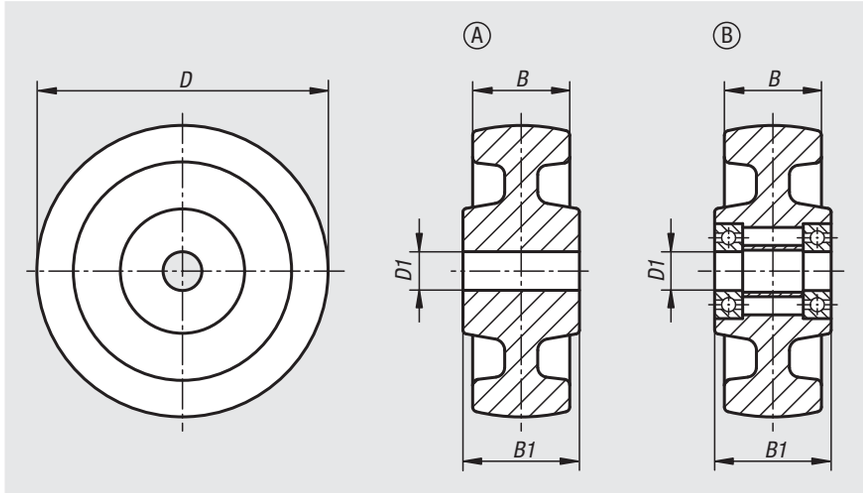

Material:
Polyamide

Sample order:
nlm 95064-10037

Note:
Polyamide wheels are unbreakable, non-corroding, shock and impact proof and chemical resistant.
They also have high abrasion resistance and low roll resistance.
Suitable for 95040.

Drawing reference:
Form A: plain bearing
Form B: ball bearing

Order No.	Form	Wheel bearing	D	D1	B	B1	Permissible load kg
95064-07532	A	plain bearing	75	12	32	35	300
95064-10037	A	plain bearing	100	15	37	45	500
95064-12540	A	plain bearing	125	15	40	45	700
95064-15050	A	plain bearing	150	20	50	60	800
95064-20050	A	plain bearing	200	20	50	60	1500
95064-25065	A	plain bearing	250	25	65	65	2000
95064-075321	B	ball bearing	75	15	32	35	300
95064-100371	B	ball bearing	100	15	37	45	500
95064-125401	B	ball bearing	125	20	40	45	700
95064-150501	B	ball bearing	150	20	50	60	800
95064-200501	B	ball bearing	200	25	50	60	1500
95064-250651	B	ball bearing	250	25	65	65	2000

Elevating castors with foot

with bolt hole or mounting plate

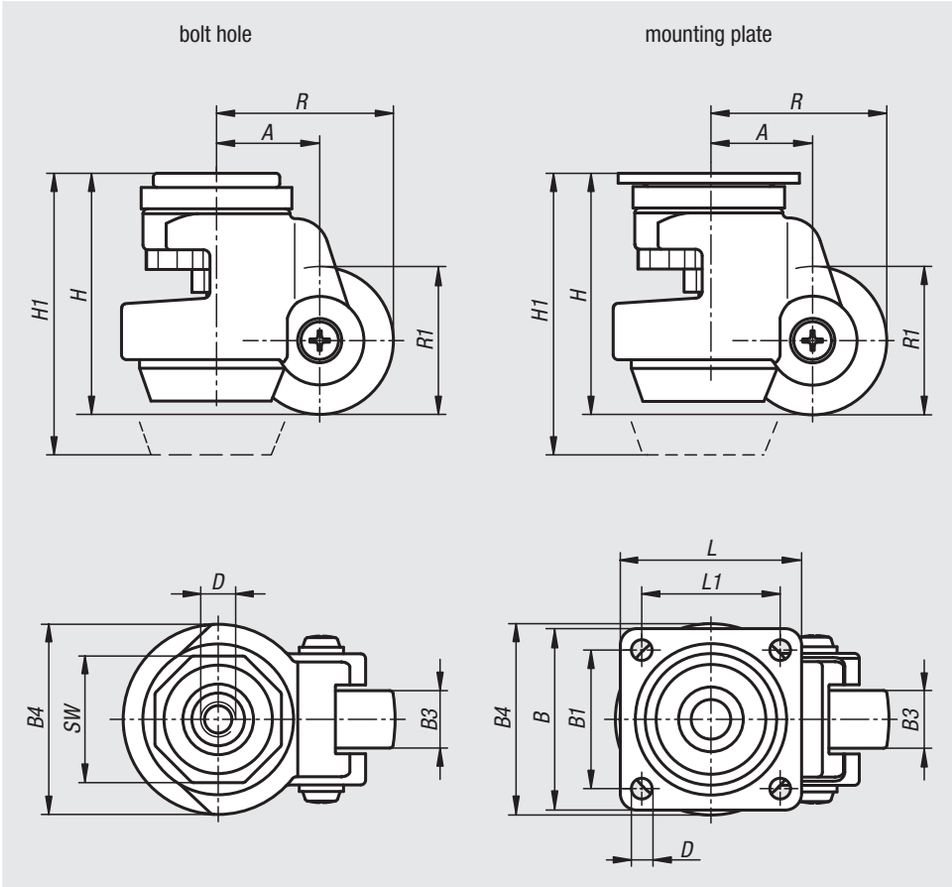

Material:
Housing die-cast aluminium.
Roller unbreakable polyamide 6, 70 Shore D.
Foot hard rubber.

Version:
Housing, powder-coated, ivory.
Steel parts galvanized, blue-passivated.
Roller and foot black.

Sample order:
nlm 95090-045180

Note:
Elevating castor with foot. With sealed ball bearing in the swivel head. Height adjustment with a 13 mm spanner or by the integrated adjustment screw. Wheel axle bolted.

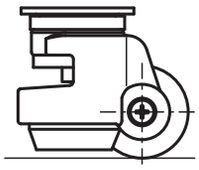

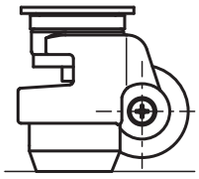

Order No.	Version	Wheel bearing	D	A	B	B1	B3	B4	H	H1	L	L1	R	R1	SW	Permissible load kg
95090-045180	with bolt hole	plain bearing	M8x12	32	-	-	18	58	72	82	-	-	54,5	45	40	180
95090-050220	with bolt hole	plain bearing	M12x15	38	-	-	22	72	84	94	-	-	63	50	46	250
95090-063290	with bolt hole	plain bearing	M12x15	46	-	-	29	85	104	119	-	-	77,5	63	65	500
95090-045181	with mounting plate	plain bearing	7	32	55	42	18	58	72	82	55	42	54,5	45	-	180
95090-050221	with mounting plate	plain bearing	7	38	73	58	22	72	84	94	73	58	63	50	-	250
95090-063291	with mounting plate	plain bearing	9	46	90	70	29	85	104	119	90	70	77,5	63	-	500

Elevating castors

with integrated machine foot

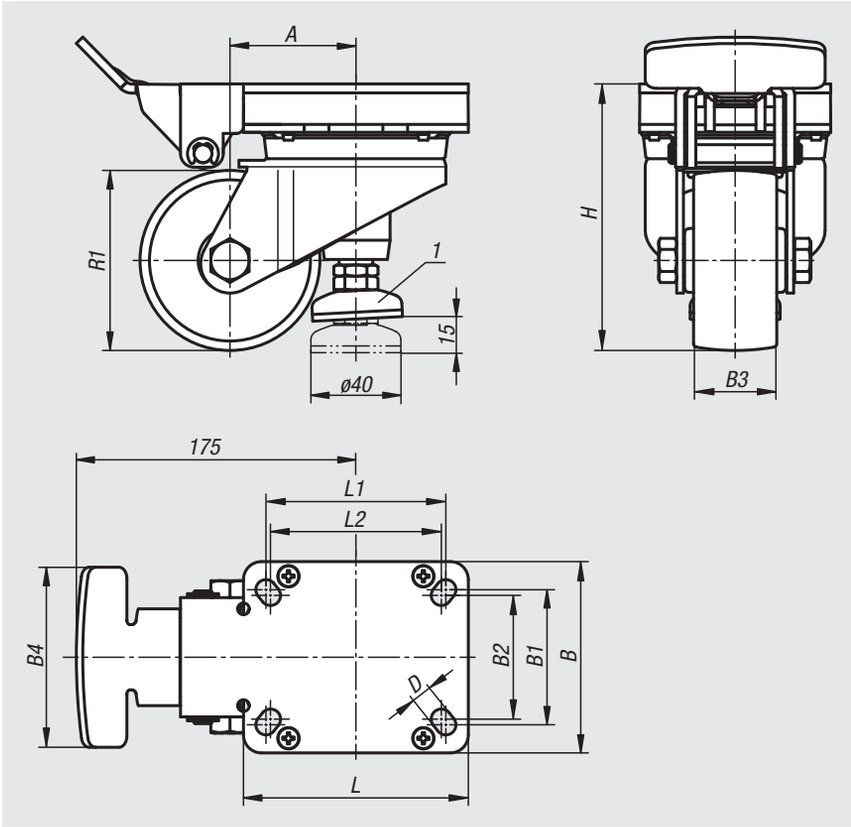

Material:
Housing steel plate.
Roller unbreakable polyamide 6, 70 Shore D.
Machine foot steel.

Version:
Housing galvanized and blue passivated.
Roller white.
Machine foot galvanized with grey rubber pads.

Sample order:
nlm 95092-08037

Note:
Elevating castor swivel version with integrated levelling machine foot. With sealed ball bearing in the swivel head. Wheel axle bolted. The ergonomic form of the non-swivelling actuating lever allows ease of operation. The short actuation travel with simultaneous long plunger stroke and very high lifting force allows heavy weights to be easily raised and safely fixated.

Drawing reference:
1) swivelling

Order No.	Wheel bearing	D	A	B	B1	B2	B3	B4	H	L	L1	L2	R1	Permissible load kg
95092-08037	plain bearing	9	56	85	60	55	37	80	120	100	80	76	80	230
95092-10037	plain bearing	9	65	85	60	55	37	80	142	100	80	76	100	230

Mounting instructions and specifications
Ball transfer units

Ball transfer units allow bulky goods to be easily transported, rotated and directed. They have long proven their worth in conveyor systems, feeder systems, machining centres and packaging plants.

Applications:

Conveyor technology
- ball pallets, rotary tables and sorting and distribution switch points
- crossing points in permanent conveyance systems
- Airport luggage sorting plants
- Steel pipe transport
- Lifting platforms

General machine shops
- Feed tables for sheetmetal handling machines
- Fixtures for bending machines
- Conveyors for machining centres
- Motor driven assembly aids in heavy engineering

Other applications
- Custom machine construction
- Aerospace technology
- Beverage production
- Stone processing

Ball transfer units have a steel housing with a hardened ball cup. This serves as the track for a number of small bearing balls. These bearing balls roll in the cup with the rotation of the load ball. Ball transfer units are designed so that precise rolling and load carrying is guaranteed in all positions. Ball transfer units are low maintenance and almost all types have an oil soaked felt seal to protect from dirt.

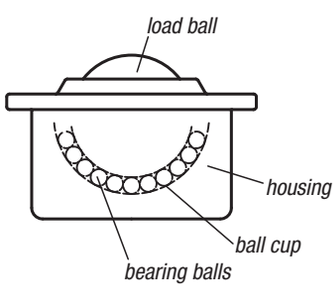

Calculating the ball transfer unit loading
To calculate the loading for ball transfer units, divide the weight of the transported goods by 3. With good coordination of the load ball surface and, depending on the properties of the goods transported, the number of load bearing ball transfer units can also be calculated.

Example:
Weight of the transported goods = 300 kg

Ball transfer unit loading:

$$F = \frac{300\ \text{kg}}{3} = 100\ \text{kg}$$

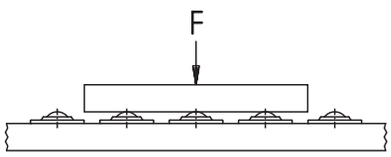

Arrangement of the ball transfer units
The arrangement of the ball transfer units depends on the surface area of the goods to be transported. By goods with a uniform, level surface area, such as the base of boxes, the distance between the ball transfer units is simply calculated from the length of the shortest edge divided by 2.5.

Example:
Surface area of goods
= 500 x 1000 mm

Distance between ball transfer units:

$$a = \frac{500\ \text{mm}}{2{,}5} = 200\ \text{mm}$$

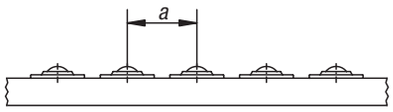

Transport speed and load capacity
The recommended conveyance speed is 1 m/sec. With polyamid load balls 0.25 m/sec. The specified load rating applies to all mounting positions and relates to 106 revolutions of the load ball. By extended use in excess of 1 m/sec and depending on the loading, the temperature can be expected to rise and the useful life reduced, particularly with balls Ø60 to Ø90.

Calculating the lifespan

$$L = \left(\frac{C}{F}\right)^3 \cdot 10^6 \quad \text{revs}$$

L = lifespan
C = load rating (N)
F = loading (N)

Attention:
Use high temperature lubricant!
Follow manufacturer's instructions!
It is possible that the existing lubrication oil may have to be washed out.

Temperature load ball		Temperature factor fT
steel °C	polyamid °C	
125	40	0,9
150	50	0,8
175	60	0,7
-	70	0,6
200	80	0,5

Temperature resistance
For ball transfer units with a felt seal the temperature resistance is 100 °C by constant temperature.

Only non-galvanised ball transfer units with a steel ball and no felt seal can be used at temperatures in excess of 100 °C. Note the load rating reduction! Multiply the load rating by the temperature factor (table).

Calculating the loading by undersprung ball transfer units.
For these types the determining factor is the value given in the "Pre-tension" column of the table. The weight of the transported goods is divided by the number of supporting ball transfer units.

Ball transfer units

with steel housing

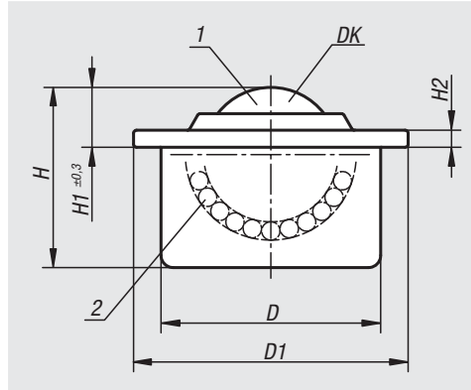

Material:
Galvanized steel or stainless steel

Sample order:
nlm 95150-122

Note:
Ball transfer units with steel housing have a felt seal to protect against dirt.

Drawing reference:
1) load ball
2) bearing balls

Form B: cap and housing galvanized, balls steel
Form C: cap and housing galvanized, balls stainless steel
Form D: cap, housing and balls stainless steel

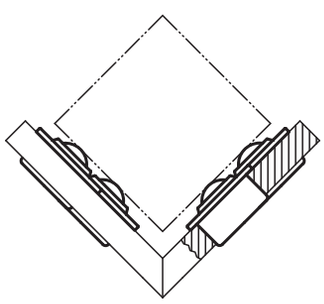

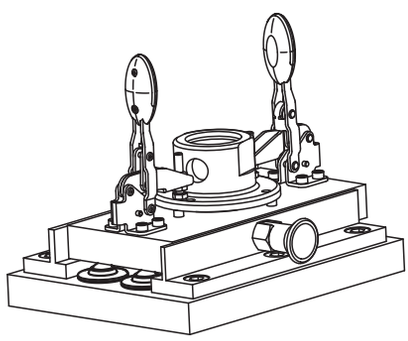

Order No.	Form	DK	D	D1	H	H1	H2	Load rating C (N)	Suitable tolerance ring
95150-115	B	15,8	24 ±0,065	31	21	9,5	2,8	600	95164-024
95150-122	B	22,2	36 ±0,080	45	30	9,8	2,8	1600	95164-036
95150-130	B	30	45 ±0,080	55	37	13,8	4	3000	95164-045
95150-145	B	44,5	62 ±0,095	75	53,5	19	4	6100	95164-062
95150-215	C	15,8	24 ±0,065	31	21	9,5	2,8	600	95164-024
95150-222	C	22,2	36 ±0,080	45	30	9,8	2,8	1600	95164-036
95150-230	C	30	45 ±0,080	55	37	13,8	4	3000	95164-045
95150-245	C	44,5	62 ±0,095	75	53,5	19	4	6100	95164-062
95150-315	D	15,8	24 ±0,065	31	21	9,5	2,8	380	95164-024
95150-322	D	22,2	36 ±0,080	45	30	9,8	2,8	1000	95164-036
95150-330	D	30	45 ±0,080	55	37	13,8	4	2000	95164-045

Ball transfer units

with steel housing and plastic ball

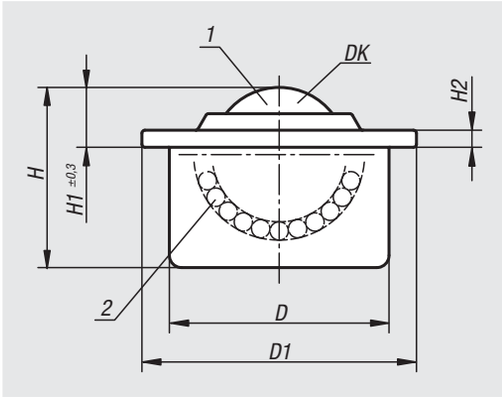

Material:
Galvanized steel.
Polyamid PA 66 ball.

Sample order:
nlm 95152-122

Note:
Ball transfer units with plastic balls are particularly suitable for transporting sensitive materials such as polished aluminium, brass and steel sheets or glass.
They have a felt seal to protect against dirt.

Drawing reference:
1) load ball
2) bearing balls

Form B: cap and housing galvanized, bearing balls steel.
Form C: cap and housing galvanized, bearing balls stainless steel

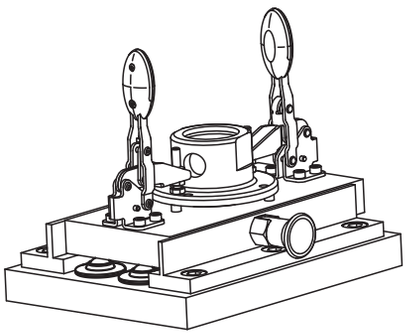

Order No.	Form	DK	D	D1	H	H1	H2	Load rating C (N)	Suitable tolerance ring
95152-115	B	15,8	24 ±0,065	31	21	9,5	2,8	100	95164-024
95152-122	B	22,2	36 ±0,080	45	30	9,6	2,8	200	95164-036
95152-130	B	30	45 ±0,080	55	37	13,6	4	250	95164-045
95152-215	C	15,8	24 ±0,065	31	21	9,5	2,8	100	95164-024
95152-222	C	22,2	36 ±0,080	45	30	9,6	2,8	200	95164-036
95152-230	C	30	45 ±0,080	55	37	13,6	4	250	95164-045

Ball transfer units

undersprung

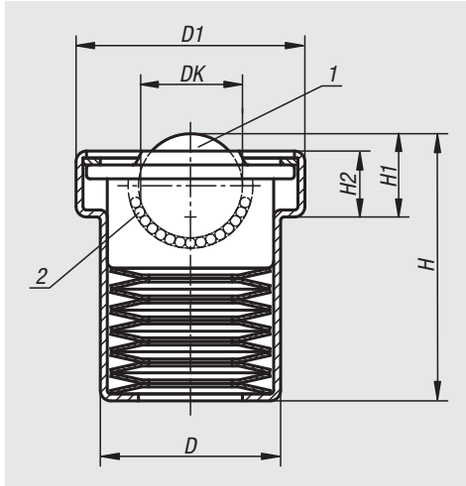

Material:
Steel galvanized.

Sample order:
nlm 95154-122

Note:
Undersprung ball transfer units allow for even distribution of loads for goods with uneven surfaces.
When used in machines such as punch presses and bend form machines the ball rollers spring back up after the forming process and the finished article can be rolled off.

By the “End tension (N)” the ball has completely receded into the housing.

Drawing reference:
1) load ball
2) bearing balls

Form B: cap and housing galvanized, balls steel
Form C: cap and housing galvanized, balls stainless steel

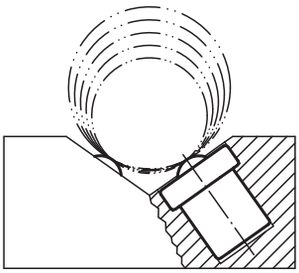

Order No.	Form	DK	D	D1	H	H1	H2	Pre-tension (N)	End tension (N)	Tol. for pre and end tension (%)
95154-122	B	22,2	39	50	51,5	18,5	14	730	860	+25 / -7,5
95154-130	B	30	48,2	62	70	24,4	17,7	1350	1600	+15 / -7,5
95154-145	B	45	66,4	85	100,5	35,6	24,2	2280	2770	+15 / -7,5
95154-222	C	22,2	39	50	51,5	18,5	14	730	860	+25 / -7,5
95154-230	C	30	48,2	62	70	24,4	17,7	1350	1600	+15 / -7,5
95154-245	C	45	66,4	85	100,5	35,6	24,2	2280	2770	+15 / -7,5

95156

Ball transfer units

with solid steel housing

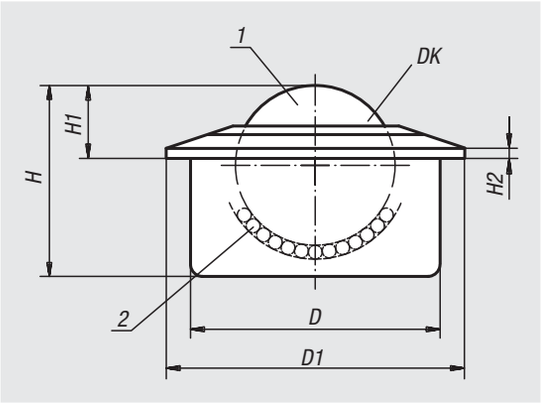

Material:
Steel galvanized.

Sample order:
nlm 95156-160

Note:
Ball transfer units with solid housings remain functional even under heavy impact loads and extreme conditions.
They have a felt seal to protect against dirt.

Drawing reference:
1) load ball
2) bearing balls

Form B: cap and housing galvanized, balls steel
Form C: cap and housing galvanized, balls stainless steel

Order No.	Form	DK	D	D1	H	H1	H2	Load rating C (N)	Suitable tolerance ring
95156-160	B	57,1	100 ±0,1	117	77,5	29,5	5	15000	95164-100
95156-260	C	57,1	100 ±0,1	117	77,5	29,5	5	10000	95164-100

95156-01

Ball transfer units heavy duty

stainless steel

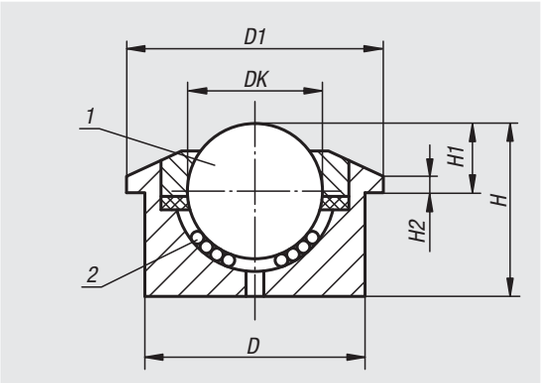

Material:
Balls stainless steel 1.4021.
Housing stainless steel 1.4301.

Version:
Bright.

Sample order:
nlm 95156-01-322

Note:
Solid steel ball transfer units are designed for long life by impact loading.
The unit includes dust seals and self-cleaning apertures.
All units are supplied with solid steel housings and hardened surfaces.

Drawing reference:
1) load ball
2) bearing balls

Order No.	DK	D1	D	H	H1	H2	Load rating C (N)
95156-01-322	22,2	45	36±0,080	30,5	9,8±0,2	3	1200
95156-01-330	30	55	45±0,080	36,8	13,8±0,2	3,4	2000
95156-01-345	44,5	75	62±0,1	53,5	19	3,8	3000

95156-02

Ball transfer units heavy duty

stainless steel, suitable for outdoor use

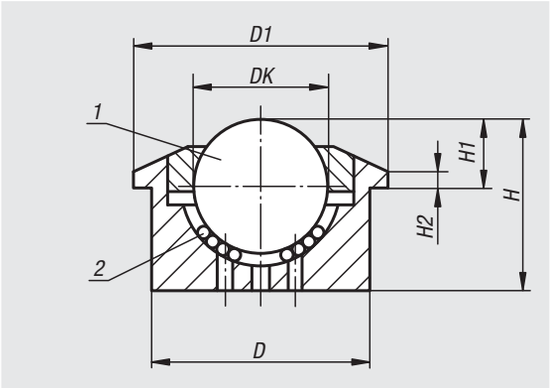

Material:
Balls stainless steel 1.4021.
Housing stainless steel 1.4301.

Version:
Bright.

Sample order:
nlm 95156-02-330

Note:
Solid steel ball transfer units are designed for long life by impact loading.
All units are supplied with solid steel housings and hardened surfaces.
The large number of self-cleaning apertures give the ball transfer units a high self-cleaning efficiency making them suitable for outdoor use.

Drawing reference:
1) load ball
2) bearing balls

Order No.	DK	D1	D	H	H1	H2	Load rating C (N)
95156-02-330	30	55	45±0,080	36,8	13,8±0,2	3,4	2000
95156-02-345	44,5	75	62±0,1	53,5	19	3,8	3000

95158

Ball transfer units

with fastening holes, without housing

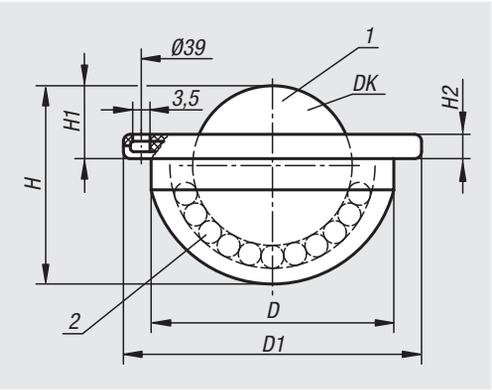

Material:
Steel galvanized.

Sample order:
nlm 95158-122

Note:
Ball transfer units with fastening holes for easy installation and removal.

Drawing reference:
1) load ball
2) bearing balls

Form B: cap and housing galvanized, balls steel
Form C: cap and housing galvanized, balls stainless steel

Order No.	Form	DK	D	D1	H	H1	H2	No. of fastening holes	Load rating C (N)
95158-122	B	22	33-0,2	45	27,7	9,8±0,2	5	3	1200
95158-222	C	22	33-0,2	45	27,7	9,8±0,2	5	3	900

95160

Ball transfer units

with spring clips

Material:
Steel galvanized.

Sample order:
nlm 95160-122

Note:
Ball transfer units with spring clips for easy installation and removal from the functional side. The roller is held in place with spring clips, this permits generous tolerances in the receiving hole.
They have a felt seal to protect against dirt.
S = Minimum nominal thickness of mounting base.

Drawing reference:
1) load ball
2) bearing balls

Form B: cap and housing galvanized, balls steel
Form C: cap and housing galvanized, balls stainless steel

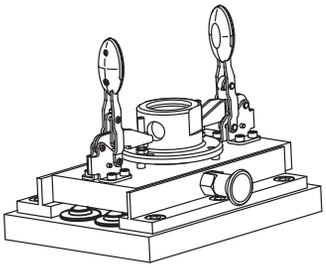

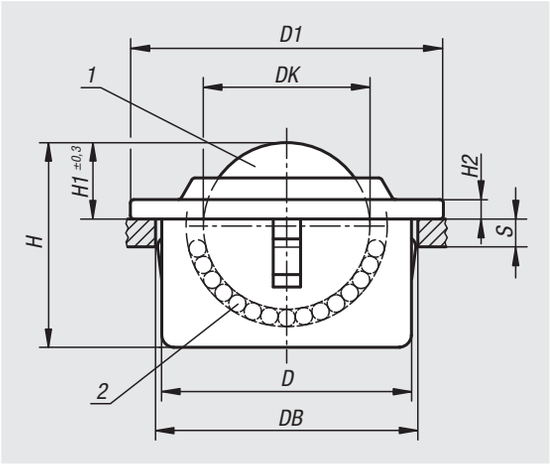

Order No.	Form	DK	D	D1	Receiver-Ø DB	H	H1	H2	S	Load rating C (N)
95160-115	B	15,8	24 ±0,1	31	25 +0,5	21	9,5	2,8	2	600
95160-122	B	22,2	36 ±0,1	45	37 +0,5	30	9,8	2,8	3	1600
95160-130	B	30	45 ±0,1	55	46 +0,5	37	13,8	4	6	3000
95160-215	C	15,8	24 ±0,1	31	25 +0,5	21	9,5	2,8	2	600
95160-222	C	22,2	36 ±0,1	45	37 +0,5	30	9,8	2,8	3	1600
95160-230	C	30	45 ±0,1	55	46 +0,5	37	13,8	4	6	3000

95164

Tolerance rings

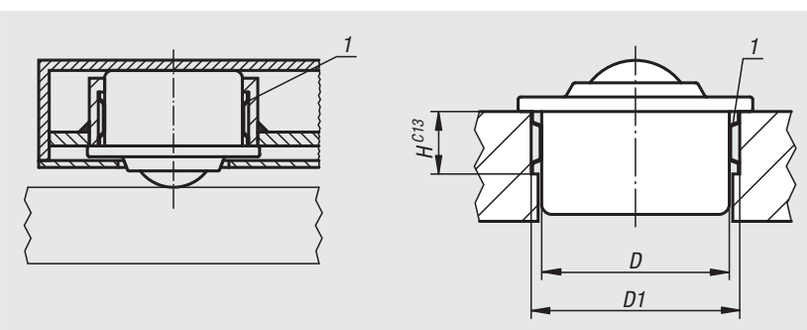

Material:
Spring band steel

Sample order:
nlm 95164-024

Note:
The use of tolerance rings allows for a greater tolerance range between the parts being assemble.
The ball transfer units can be fitted quickly and cost effectively.

Drawing reference:
1) tolerance ring

Order No.	D	Assembly dimensions D1	Assembly dimensions H
95164-024	24	25,7 +0,2	7
95164-036	36	37,7 +0,2	12
95164-045	45	46,7 +0,2	12
95164-062	62	64,1 +0,3	15
95164-100	100	102,5 +0,35	19

Mini ball transfer units

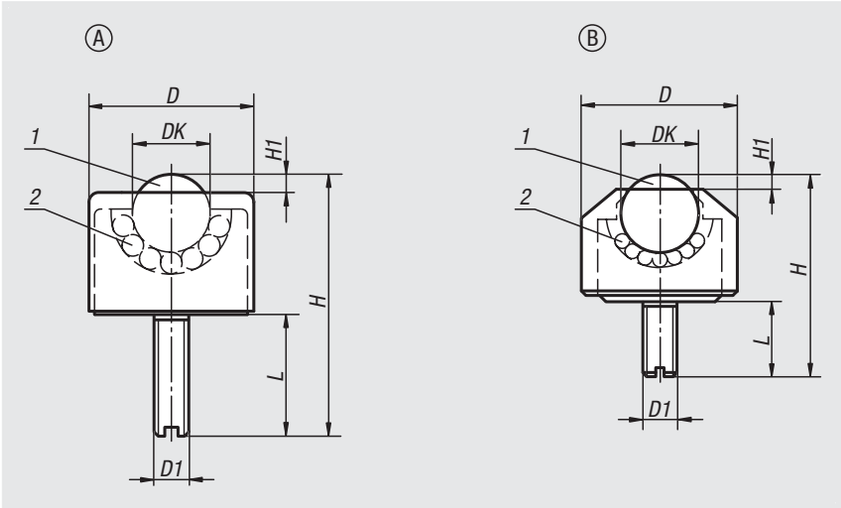

Material:
Steel version:
Load ball steel.
Bearing balls steel.
Housing galvanized steel.
Cover galvanized steel.

Stainless steel version:
Load ball stainless steel.
Bearing balls stainless steel.
Housing stainless steel.
Cover aluminium.

Sample order:
nlm 95180-1105

Note:
The ball transfer units comprise a housing with integrated bearing shell, a cover, a load ball and several supporting balls. For use in measuring instruments, material conveyance in clean rooms and miniature mechanisms.

Drawing reference:
1) load ball
2) bearing balls

Order No.	Form	Main material	DK	D	D1	H	H1	L	Load rating C (N)
95180-1105	A	steel	4,8	13	M6	24	1	15	100
95180-1106	A	steel	6,4	17	M6	26	2	15	200
95180-1108	A	steel	7,9	18	M8	32	2	18	300
95180-1110	A	steel	9,6	23	M8	40	2	20	400
95180-1113	A	steel	12,7	28	M8	48	3,5	23	500
95180-1216	B	steel	15,8	24	M6	32,5	4	12	700
95180-2205	B	stainless steel	4,8	8	M2	8,5	1	2,5	50
95180-2206	B	stainless steel	6,4	13	M3	16,5	2	6	100
95180-2208	B	stainless steel	7,9	15	M4	20,5	2	8	150

Ball transfer units with stud

stainless steel

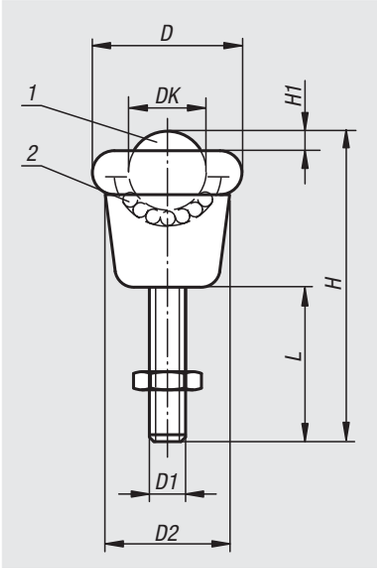

Material:
Balls stainless steel 1.4021.
Housing stainless steel 1.4301.

Version:
Bright.

Sample order:
nlm 95182-01-190820

Note:
The ball transfer units has a large support area.
The stud fastening allows for high stability and heavy loading.
The formed wiper seal is external.

Drawing reference:
1) load ball
2) bearing balls

Order No.	DK	D	D1	D2	H	H1	L	Tightening torque of screws Nm	Load rating C (N)
95182-01-190820	19	32,1	M8	25,4	62,3	4,7	20	15	250
95182-01-190835	19	32,1	M8	25,4	62,3	4,7	35	15	250

Small conveyor belts

with internal drive

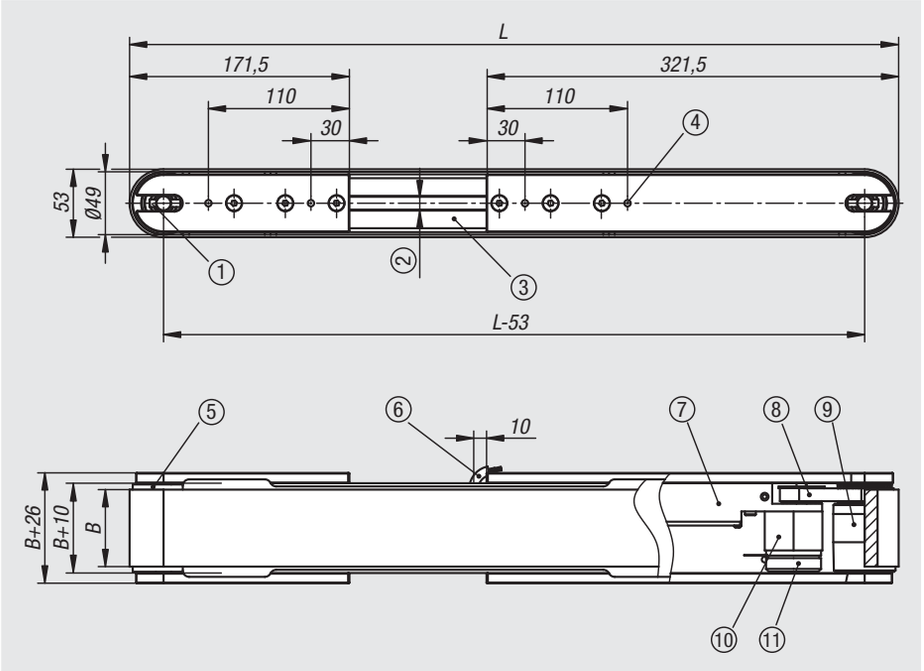

Material:
Frame aluminium profile 45x45 type B.
Bearing flanges aluminium.
Screws steel.
Belt support stainless steel 1.4301.
Deflector rollers aluminium.
Belt support plate 2 mm VA plate.
Axles stainless steel.
Conveyor belt transport side PVC hardness Shore 70A (±5).

Version:
Frame and bearing flanges anodized.
Screws galvanised.

Sample order:
nlm 95300-010047060X520

Note:
- internal drive
- 24 V DC electrically commutated, highly durable
- minimum installation space, no protruding edges
- integrated control technology
- widths and lengths in 1 mm increments on request
- flexible mounting options with profile system type B
- motor externally adjustable via control cables
- running side of the conveyor belt fabric polyurethane impregnated (TPU)
- conveyor belt fabric polyester (PET)
- conveyor belt transport side has a smooth surface

Assembly:
Electrical connections/functions (7-wire cable with exposed ends 5 m):

white: +24 V power supply +24 V, protected against polarity reversal
brown: -Gnd power supply -24 V protected against polarity reversal
green: direction switched to Gnd, changes the direction
yellow: disable switched to Gnd, belt stops
grey: brake switched to Gnd, briefly closes the winding, belt brakes
pink: speed 0–5 V speed control from 1.25% to 100% of nominal speed
blue: monitor N digital speed output

On request:
- belt width B from 60 to 400 mm
- overall length L from 520 to 2000 mm
- other belt materials
- other transmission ratios

Technical data:
- nominal voltage: 24 V
- type power: 30 W
- starting current: 2 A
- motor speed: 5000 rpm
- cable length: 5 m
- conveyor belt thickness: max. 2 mm
- cable outlet: right (standard)

Conveyor belt drive:
- brushless EC motor 24 V, 30 W
- control electronics integrated in conveyor belt
- spur gear transmission
- toothed belt drive underneath conveyor belt

Drawing reference:

1) Self-locking setscrew (4x)
2) Slot width 10
3) Aluminium profile 45x45 type B
4) M6 (both sides)
5) Crowned pulley
6) Cable, 7 wire, 5 m
7) Motor control housing
8) Toothed belt profile T5
9) Drive roller, crowned
10) Spur gear transmission
11) Motor 24 V EC (brushless)

Order No.	B	L	Belt speed m/min max.	Transmission ratio	Max. load kg	Belt material transport side
95300-010047060X520	60	520	11,5	1:47	3	smooth PVC, Shore 70A
95300-010047060X750	60	750	11,5	1:47	3	smooth PVC, Shore 70A
95300-010047060X1000	60	1000	11,5	1:47	3	smooth PVC, Shore 70A
95300-010047060X1500	60	1500	11,5	1:47	3	smooth PVC, Shore 70A
95300-010047100X520	100	520	11,5	1:47	3	smooth PVC, Shore 70A
95300-010047100X750	100	750	11,5	1:47	3	smooth PVC, Shore 70A
95300-010047100X1000	100	1000	11,5	1:47	3	smooth PVC, Shore 70A
95300-010047100X1500	100	1500	11,5	1:47	3	smooth PVC, Shore 70A
95300-010047150X520	150	520	11,5	1:47	3	smooth PVC, Shore 70A
95300-010047150X750	150	750	11,5	1:47	3	smooth PVC, Shore 70A
95300-010047150X1000	150	1000	11,5	1:47	3	smooth PVC, Shore 70A
95300-010047150X1500	150	1500	11,5	1:47	3	smooth PVC, Shore 70A
95300-010047200X520	200	520	11,5	1:47	3	smooth PVC, Shore 70A
95300-010047200X750	200	750	11,5	1:47	3	smooth PVC, Shore 70A
95300-010047200X1000	200	1000	11,5	1:47	3	smooth PVC, Shore 70A
95300-010047200X1500	200	1500	11,5	1:47	3	smooth PVC, Shore 70A

Notes

96000

Feeler gauge strips
Magnetic labels and envelopes
Protective nets
Supercraft mallets and inserts
Taper and cylinder cleaners
Coolant hoses

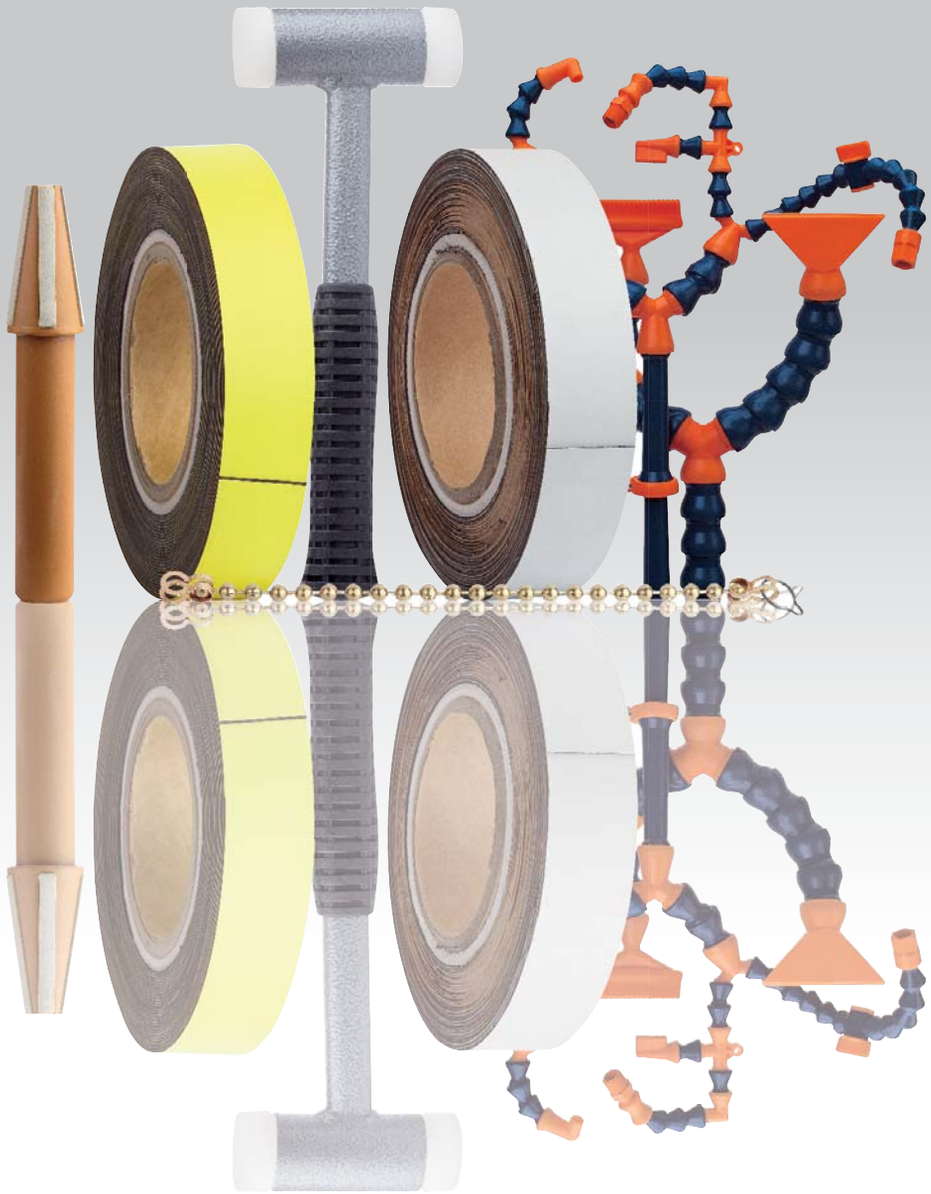

Coolant hose LOC-LINE® Flexi

Material:
Polyoxymethylene (POM).

Version:
Flexible hose blue or black.
Accessories orange .

Sample order:
nlm 96200-1400141

Note:
The flexible hose is used to direct liquids or extract liquids, dust, steam or smoke. It can be extended and shortened as needed. The material is resistant to most chemicals and solvents. It is not electrically conductive, so it is also suitable for use on EDM's.

Precise adjustment, vibration resistant, position reliability, pressure stability. Freely combinable with nozzles, fasteners, junctions, T-pieces, reducers, extensions etc.

Recommneded line pressure:
Size 1/4″ 2 - 3.5 bar
Size 1/2″ 1.4 - 2 bar
Size 3/4″ 0.7 - 1.4 bar

Flow rate:
Size 1/4″ 950 l/min.
Size 1/2″ 1800 l/min.
Size 3/4″ 4300 l/min.

Temperature range:
-20 °C to +80 °C.

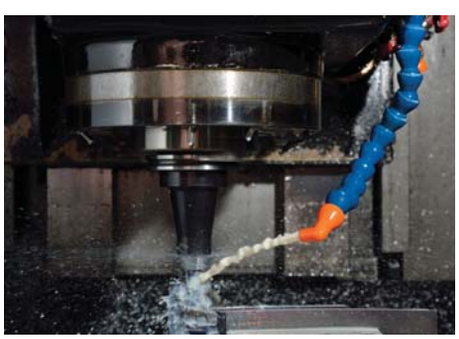

90° angle nozzle ø6

Flat nozzle with joint
16 hole ø1.5

Ring system

Coolant hose LOC-LINE® Flexi

1/4”

Order No.	Image	Article description	Application
96200-1400141		FLEXIBLE HOSE SIZE:1/4 L=140, BLUE	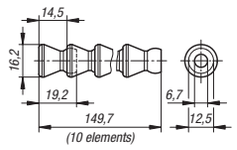
96200-1400142		FLEXIBLE HOSE SIZE:1/4 L=140, BLACK	
96200-1415001		FLEXIBLE HOSE SIZE:1/4 L=15M, BLUE	
96200-1415002		FLEXIBLE HOSE SIZE:1/4 L=15M, BLACK	
96200-1401		ROUND NOZZLE SIZE:1/4, D=1,5	punctiform jet
96200-1402		ROUND NOZZLE SIZE:1/4, D=3	punctiform jet
96200-1403		ROUND NOZZLE SIZE:1/4, D=6	punctiform jet
96200-1404		FLAT NOZZLE WIDE SPRAY SIZE:1/4 B=25	flat wide jet
96200-1405		FLAT NOZZLE SIZE:1/4 B=12X1	jet with constant profile
96200-1406		FLAT NOZZLE SIZE:1/4 B=12X1,5	jet with constant profile
96200-1407		FLAT NOZZLE SIZE:1/4, 5-HOLE	several parallel single jets
96200-1408		FLAT NOZZLE SIZE:1/4, 7-HOLE	several parallel single jets
96200-1409		GRINDING NOZZLE SIZE:1/4 B=25	straight bundled jet
96200-1410		FLAT NOZZLE WITH BALL JOINT SIZE:1/4, 16-HOLE, D=1	several parallel single jets
96200-1411		FLAT NOZZLE WITH BALL JOINT SIZE:1/4, 16-HOLE, D=1,5	several parallel single jets
96200-1412		FLAT NOZZLE WITH BALL JOINT SIZE:1/4, 20-HOLE, D=2	several parallel single jets
96200-1413		ANGLED NOZZLE 90° SIZE:1/4, D=1,5	punctiform jet
96200-1414		ANGLED NOZZLE 90° SIZE:1/4, D=3	punctiform jet
96200-1415		ANGLED NOZZLE 90° SIZE:1/4, D=6	punctiform jet
96200-1416		ANGLED NOZZLE 90° SIZE:1/4, 6-HOLE	several parallel single jets
96200-1417		SCREW CONNECTION 1/8 NPT SIZE:1/4	with ball and male thread
96200-1418		SCREW CONNECTION 1/4 NPT SIZE:1/4	with ball and male thread
96200-1419		DISTRIBUTOR SIZE:1/4	2 hoses from 1 supply line
96200-1420		DISTRIBUTOR SIZE:1/4	2 hoses at 90° from 1 supply line
96200-1421		CONNECTING PIECE SIZE:1/4	for tight bends
96200-1422		COUPLING SIZE:1/4	socket both sides
96200-1423		ADAPTER SIZE:1/4, D=1/8	with socket and female thread
96200-1424		EXTENSION SIZE:1/4 L=95	for bridging long stretches
96200-1425		HOSE BEND 90° SIZE:1/4	for bends
96200-1426		RING SYSTEM SIZE:1/4	lateral spray
96200-1427		LOCKING RING WITH SCREW SIZE:1/4	prevents bending or positional change at high pressure
96200-1428		CHECK VALVE SIZE:1/4	prevents dripping
96200-1429		SHUT-OFF VALVE EXTERNAL THREAD SIZE:1/4, 1/4 NPT	regulates and stops the flow
96200-1430		SHUT-OFF VALVE INTERNAL THREAD SIZE:1/4, 1/4 NPT	regulates and stops the flow
96200-1431		SHUT-OFF VALVE WITH SEGMENT ADAPTER SIZE:1/4	regulates and stops the flow
96200-1499		ASSEMBLY TOOL SIZE:1/4	For assembling hose elements

Coolant hose LOC-LINE® Flexi

1/2”

Order No.	Image	Article description	Application
96200-1200141		FLEXIBLE HOSE SIZE:1/2 L=140, BLUE	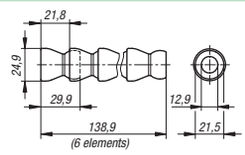
96200-1200142		FLEXIBLE HOSE SIZE:1/2 L=140, BLACK	
96200-1215001		FLEXIBLE HOSE SIZE:1/2 L=15M, BLUE	
96200-1215002		FLEXIBLE HOSE SIZE:1/2 L=15M, BLACK	
96200-1201		ROUND NOZZLE SIZE:1/2, D=6	punctiform jet
96200-1202		ROUND NOZZLE SIZE:1/2, D=9	punctiform jet
96200-1203		ROUND NOZZLE SIZE:1/2, D=12	punctiform jet
96200-1204		FLAT NOZZLE WIDE SPRAY SIZE:1/2 B=32	flat wide jet
96200-1205		FLAT NOZZLE WIDE SPRAY SIZE:1/2 B=63	flat wide jet
96200-1206		FLAT NOZZLE SIZE:1/2 B=18X2	jet with constant profile
96200-1207		FLAT NOZZLE SIZE:1/2 B=18X3,2	jet with constant profile
96200-1208		FLAT NOZZLE SIZE:1/2, 5-HOLE, D=3,2	several parallel single jets
96200-1209		FLAT NOZZLE SIZE:1/2, 7-HOLE, D=2	several parallel single jets
96200-1210		GRINDING NOZZLE SIZE:1/2 B=32	straight bundled jet
96200-1211		GRINDING NOZZLE SIZE:1/2 B=42	straight bundled jet
96200-1212		FLAT NOZZLE WITH BALL JOINT SIZE:1/2, 20-HOLE, D=2	several parallel single jets
96200-1213		ANGLED NOZZLE 90° SIZE:1/2, D=6	punctiform jet
96200-1214		ANGLED NOZZLE 90° SIZE:1/2, D=9	punctiform jet
96200-1215		ANGLED NOZZLE 90° SIZE:1/2, D=12	punctiform jet
96200-1216		ANGLED NOZZLE 90° SIZE:1/2, 8-HOLE	several parallel single jets
96200-1217		SCREW CONNECTION 3/8 NPT SIZE:1/2	with ball and male thread
96200-1218		SCREW CONNECTION 1/2 NPT SIZE:1/2	with ball and male thread
96200-1219		DISTRIBUTOR SIZE:1/2	2 hoses from 1 supply line
96200-1220		DISTRIBUTOR REDUCED SIZE:1/2-1/4	2 hoses from 1 supply line
96200-1221		DISTRIBUTOR SIZE:1/2	2 hoses at 90° from 1 supply line
96200-1222		CONNECTING PIECE SIZE:1/2	for tight bends
96200-1223		COUPLING SIZE:1/2	socket both sides
96200-1224		REDUCING BUSH SIZE:1/2-1/4	reduces from 1/2“ to 1/4“
96200-1225		EXTENSION SIZE:1/2 L=95	for bridging long stretches
96200-1226		HOSE BEND 90° SIZE:1/2	for bends
96200-1227		RING SYSTEM SIZE:1/2	lateral spray
96200-1228		LOCKING RING WITH SCREW SIZE:1/2	prevents bending or positional change at high pressure
96200-1229		CHECK VALVE SIZE:1/2	prevents dripping
96200-1230		SHUT-OFF VALVE EXTERNAL THREAD SIZE:1/2, 1/2 NPT	regulates and stops the flow
96200-1231		SHUT-OFF VALVE INTERNAL THREAD SIZE:1/2, 1/2 NPT	regulates and stops the flow
96200-1232		SHUT-OFF VALVE WITH SEGMENT ADAPTER SIZE:1/2	regulates and stops the flow
96200-1299		ASSEMBLY TOOL SIZE:1/2	For assembling hose elements

Coolant hose LOC-LINE® Flexi

3/4”

Order No.	Image	Article description	Application
96200-3400151		FLEXIBLE HOSE SIZE:3/4 L=152, BLUE	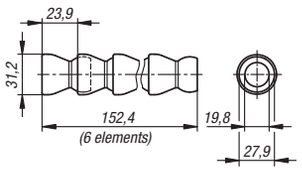
96200-3400152		FLEXIBLE HOSE SIZE:3/4 L=152, BLACK	
96200-3401501		FLEXIBLE HOSE SIZE:3/4 L=1,5M, BLUE	
96200-3401502		FLEXIBLE HOSE SIZE:3/4 L=1,5M, BLACK	
96200-3415001		FLEXIBLE HOSE SIZE:3/4 L=15M, BLUE	
96200-3415002		FLEXIBLE HOSE SIZE:3/4 L=15M, BLACK	
96200-3401		ROUND NOZZLE SIZE:3/4, D=16	punctiform jet
96200-3402		ROUND NOZZLE SIZE:3/4, D=19	punctiform jet
96200-3403		FLAT NOZZLE WIDE SPRAY SIZE:3/4 B=76	flat wide jet
96200-3404		SCREW CONNECTION NPT 3/4 SIZE:3/4	with ball and male thread
96200-3405		SCREW CONNECTION BSPT 3/4 SIZE:3/4	with ball and male thread
96200-3406		CONNECTING FOOT WITH SCREW HOLE SIZE:3/4	-
96200-3407		DISTRIBUTOR SIZE:3/4	2 hoses from 1 supply line
96200-3408		DISTRIBUTOR REDUCED SIZE:3/4-1/2	reduces from 3/4“ to 1/2“
96200-3409		REDUCING BUSH SIZE:3/4-1/2	reduces from 1/2“ to 1/4“
96200-3410		COUPLING SIZE:3/4	socket both sides
96200-3411		CONNECTING PIECE SIZE:3/4	for tight bends
96200-3412		SHUT-OFF VALVE EXTERNAL THREAD SIZE:3/4, NPT 3/4	regulates and stops the flow
96200-3413		SHUT-OFF VALVE INTERNAL THREAD SIZE:3/4, NPT 3/4	regulates and stops the flow
96200-3414		SHUT-OFF VALVE WITH SEGMENT ADAPTER SIZE:3/4	regulates and stops the flow
96200-3499		ASSEMBLY TOOL SIZE:3/4	For assembling hose elements

Suction hoses LOC-LINE® FLEXI 75

Material:
Polyoxymethylene (POM).

Version:
Flexible hose, blue.
Accessories, orange.

Sample order:
nlm 96202-75300

Note:
Flexible hose for extracting swarf, smoke, lubricant mist, steam, gases and other media; can be connected to a central extraction system or an industrial vacuum cleaner. It can be extended and shortened as needed. Free hanging lengths of up to 100 cm are possible without the need for support; 360° loops can be formed with a radius of 150 mm. Precise adjustment, vibration resistant, position reliability. Combinable with nozzles and accessories as required.

Resistant to: acids below 65 °C, alcohols, aromatic solvents, petrol, grease, hydrocarbons, oil, saline solutions.

Not resistant to: chlorine, acetone, chlorinated solvents, strong bases, ethyl acetate, water above 65 °C.

The material is not electrically conductive, so it is also suitable for use on EDM's.

Temperature range:
Maximum temperature 80 °C.
The melting point is 165 °C.

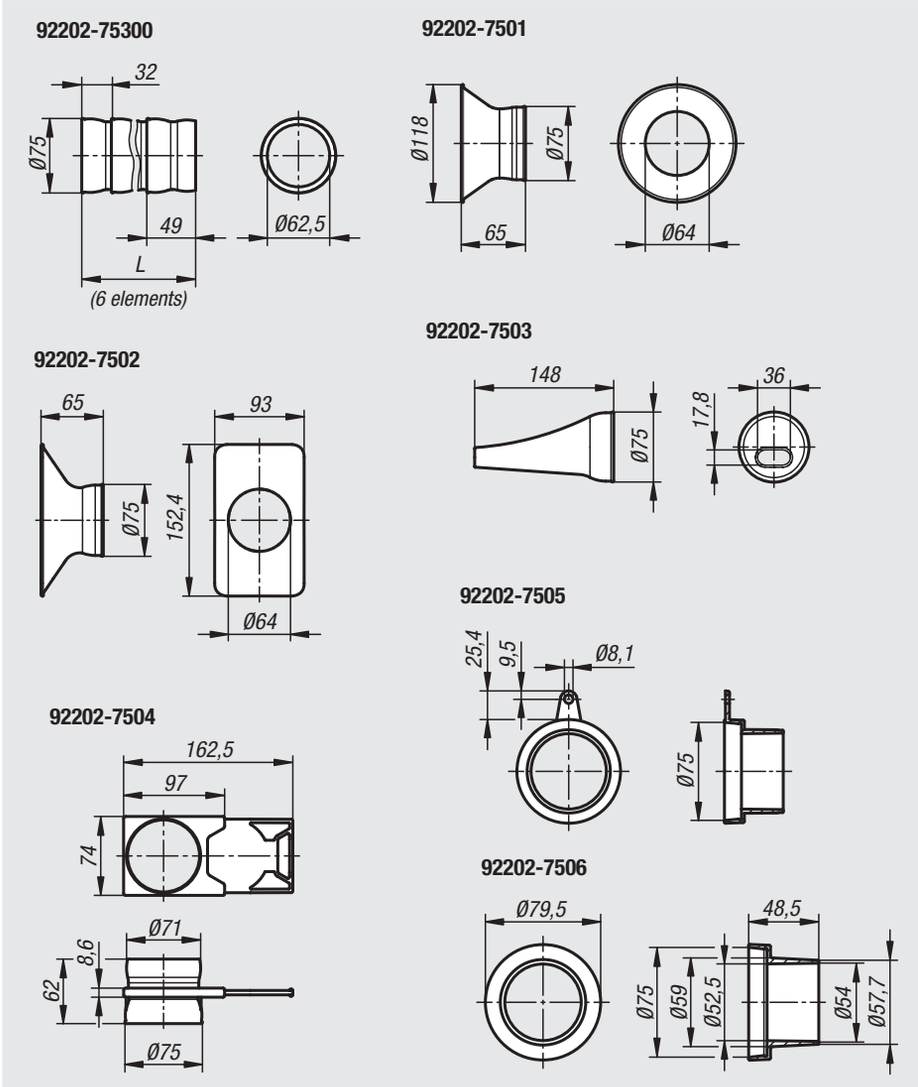

Order No.	Image	Article description
96202-75300		FLEXIBLE HOSE SIZE:75 L=300, BLUE
96202-7501		ROUND NOZZLE SIZE:75
96202-7502		RECTANGULAR NOZZLE SIZE:75
96202-7503		OVAL NOZZLE CONICAL SIZE:75
96202-7504		GATE VALVE SIZE:75
96202-7505		ADAPTER FOR INDUSTRIAL VACUUM CLE SIZE:75
96202-7506		ADAPTER FOR INDUSTRIAL VACUUM CLE SIZE:75

Suction hoses LOC-LINE® FLEXI 75

antistatic

Material:
Electrically conductive polyoxymethylene (POM).

Version:
Flexible hose, black.
Accessories, black.

Sample order:
nlm 96203-75300

Note:
Flexible hose for extracting swarf, smoke, lubricant mist, steam, gases and other media; can be connected to a central extraction system or an industrial vacuum cleaner. It can be extended and shortened as needed. Free hanging lengths of up to 100 cm are possible without the need for support; 360° loops can be formed with a radius of 150 mm. Precise adjustment, vibration resistant, position reliability. Combinable with nozzles and accessories as required.

Resistant to: acids below 65 °C, alcohols, aromatic solvents, petrol, grease, hydrocarbons, oil, saline solutions.

Not resistant to: chlorine, acetone, chlorinated solvents, strong bases, ethyl acetate, water above 65 °C.

Antistatic and electric properties:
specific surface resistivity: 1000 E3 Ω
specific electrical resistance: < 6000 E2 Ω

Temperature range:
Maximum temperature 80 °C.
The melting point is 165 °C.

92203-75300

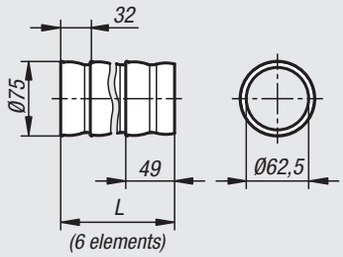

92203-7501

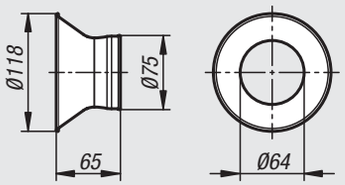

92203-7502

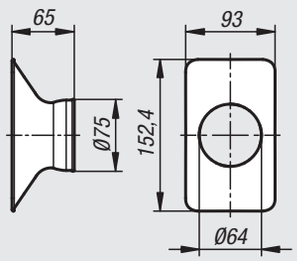

92203-7503

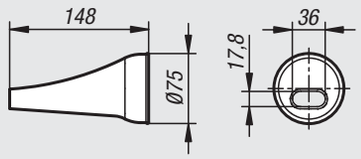

92203-7504

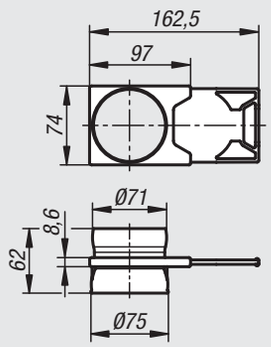

Order No.	Image	Article description
96203-75300		FLEXIBLE HOSE ANTISTATIC SIZE:75 L=300, BLACK
96203-7501		ROUND NOZZLE ANTISTATIC SIZE:75
96203-7502		RECTANGULAR NOZZLE ANTISTATIC SIZE:75
96203-7503		OVAL NOZZLE ANTISTATIC SIZE:75, CONICAL
96203-7504		GATE VALVE ANTISTATIC SIZE:75

High pressure nozzles LOC-LINE®

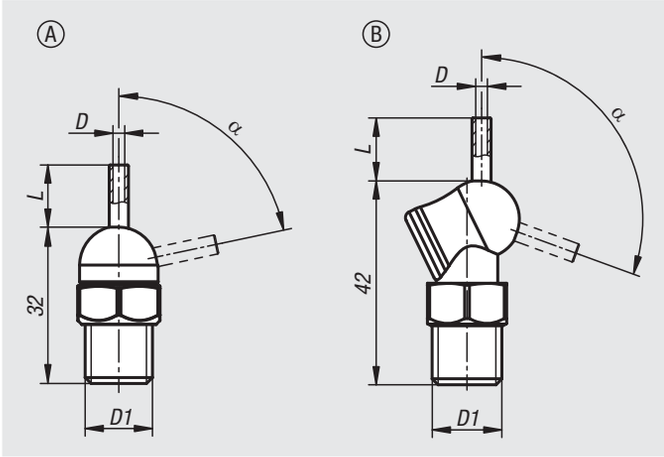

Material:
Polyoxymethylene (POM).
Nozzle stainless steel.

Version:
Colour blue/orange.

Sample order:
nlm 96205-11816064
(include length L e.g. 064 for L = 6,4 mm)

Note:
The extremely compact design makes this high-pressure nozzle ideal for use where space is at a premium. When screwed in position, the nozzle can be adjusted using a pin and retains its positional stability. Additional security is not required. It can be rotated 360° and withstands working pressure ranges of up to 70 bar.

Resistant to: acetone, alcohol, ethyl, grease, oil, commercially available dishwashing detergent, petrol, paint, solvents, sodium hydroxide.

Not resistant to: chlorine, acids, ammonium hydroxide, strong bases, hypochlorite ionic solutions, sodium hypochlorite.

Form A: nozzle pivot range up to 72°.

Form B: nozzle pivot range up to 110° (for applications where the jet is also required below the screw-on level).

Temperature range:
Maximum temperature range 50 °C.

Order No.	Form	D	D1	L	α
96205-11816* **	A	1,6	R1/8	-/6,4/12,7/31,8	72°
96205-11822* **	A	2,2	R1/8	-/6,4/12,7/31,8	72°
96205-11830* **	A	3	R1/8	-/6,4/12,7/31,8	72°
96205-11841* **	A	4,1	R1/8	-/6,4/12,7/31,8	70°
96205-11416* **	A	1,6	R1/4	-/6,4/12,7/31,8	72°
96205-11422* **	A	2,2	R1/4	-/6,4/12,7/31,8	72°
96205-11430* **	A	3	R1/4	-/6,4/12,7/31,8	72°
96205-11441* **	A	4,1	R1/4	-/6,4/12,7/31,8	70°
96205-21816* **	B	1,6	R1/8	-/6,4/12,7/31,8	110°
96205-21822* **	B	2,2	R1/8	-/6,4/12,7/31,8	110°
96205-21830* **	B	3	R1/8	-/6,4/12,7/31,8	110°
96205-21841* **	B	4,1	R1/8	-/6,4/12,7/31,8	102°
96205-21416* **	B	1,6	R1/4	-/6,4/12,7/31,8	110°
96205-21422* **	B	2,2	R1/4	-/6,4/12,7/31,8	110°
96205-21430* **	B	3	R1/4	-/6,4/12,7/31,8	110°
96205-21441* **	B	4,1	R1/4	-/6,4/12,7/31,8	102°

Feeler gauge strips

Material:
1.1274 spring steel (0.005 is 1.4301 stainless steel)

Version:
Spring hard, cold rolled

Sample order:
nlm 96382-0010

Note:
These feeler gauges are supplied in a practical dispenser. They are used for adjusting, aligning and as shims for tools, workpieces, forms etc, checking tolerances, controlling and adjusting guides, print rollers, profile templates and many other applications.

Order No.	thickness	strip width (mm)	length (m)	thickness tolerance mm
96382-0005	0,005	12,7	2	±0,001
96382-0010	0,01	12,7	2	±0,002
96382-0020	0,02	12,7	2	±0,002
96382-0030	0,03	12,7	2	±0,002
96382-0040	0,04	12,7	2	±0,003
96382-0050	0,05	12,7	2	±0,003
96382-0100	0,1	12,7	2	±0,004
96382-0200	0,2	12,7	2	±0,006
96382-0300	0,3	12,7	2	±0,007

Notes

Ball chains

Material:
A: Chain brass or stainless steel.
B: Chain brass or stainless steel, key ring stainless steel.
C: Chain brass, ring 1.4310 stainless steel.

Sample order:
nlm 96390-16X320 (include length L)

Note:
If no length is specified 1000 mm will be supplied.

Drawing reference:
1) same parts

Form A: ball chain, single
Form B: ball chain with key ring
Form C: ball chain with ring clip

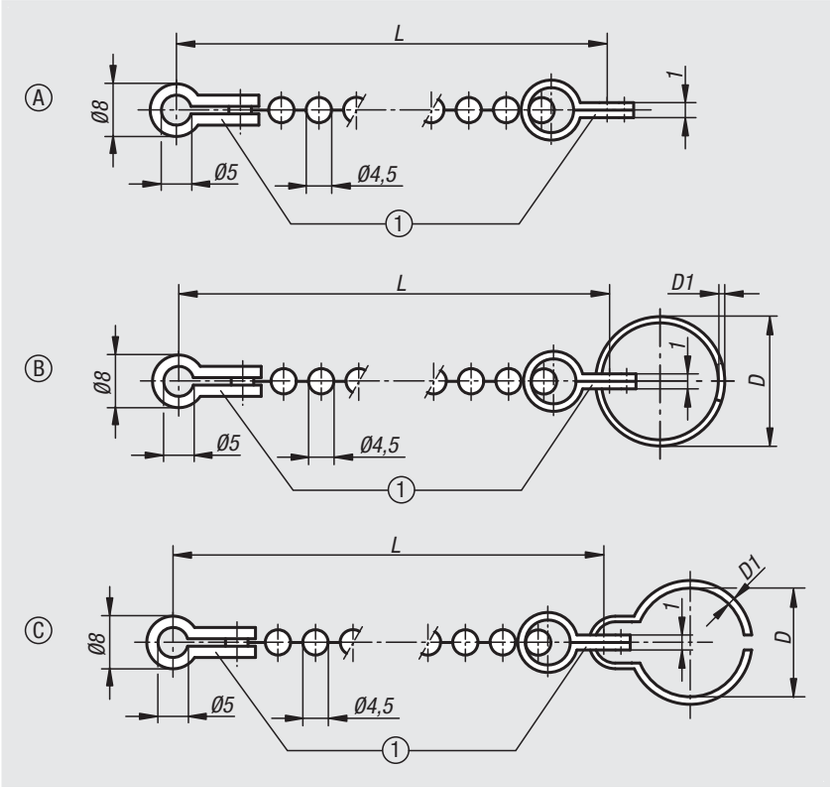

Form A, ball chain single

Order No.	Form	Version	Main material	L
96390-00X	A	single	brass	160/320/500/1000
96390-01X	A	single	stainless steel	160/320/500/1000

Form B, ball chain with keyring

Order No.	Form	Version	Main material	L	D	D1
96390-015X	B	with key ring	brass	160/320/500/1000	15	1
96390-019X	B	with key ring	brass	160/320/500/1000	19	1
96390-023X	B	with key ring	brass	160/320/500/1000	23	1,2
96390-028X	B	with key ring	brass	160/320/500/1000	28	1,7
96390-115X	B	with key ring	stainless steel	160/320/500/1000	15	1
96390-119X	B	with key ring	stainless steel	160/320/500/1000	19	1
96390-123X	B	with key ring	stainless steel	160/320/500/1000	23	1,2
96390-128X	B	with key ring	stainless steel	160/320/500/1000	28	1,7

Form C, ball chain with ring clip

Order No.	Form	Version	Main material	L	D	D1
96390-09X	C	with ring clip	brass	160/320/500/1000	9	1
96390-12X	C	with ring clip	brass	160/320/500/1000	12	1,2
96390-14X	C	with ring clip	brass	160/320/500/1000	14	1,6
96390-16X	C	with ring clip	brass	160/320/500/1000	16	1,6
96390-20X	C	with ring clip	brass	160/320/500/1000	20	2
96390-24X	C	with ring clip	brass	160/320/500/1000	24	2
96390-30X	C	with ring clip	brass	160/320/500/1000	30	2,6
96390-36X	C	with ring clip	brass	160/320/500/1000	36	2,6

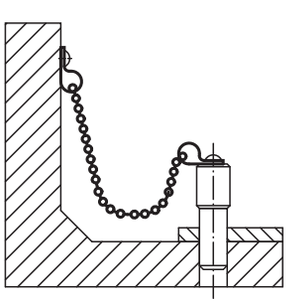

Notes

96450

Magnetic labels

on a roll, perforated

Sample order:
nlm 96450-0800201

Note:
Store shelf magnetic labels on a roll, 10 m long, perforated magnetic strips that can be separated without scissors.
Other colours and dimensions available on request.

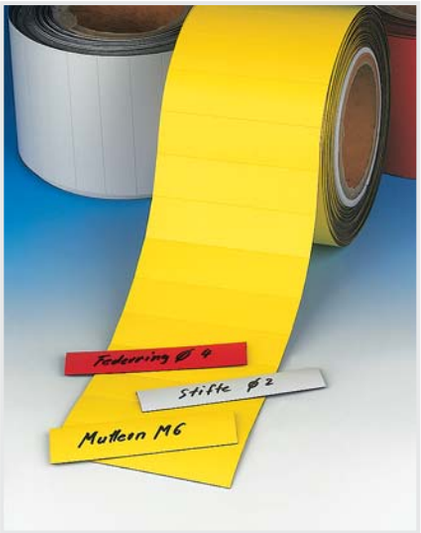

Order No. White	Order No. Yellow	length x width	Magnetic tape thickness	Labels per roll
96450-0800201	**96450-0800202**	80 x 20	0,9	500
96450-0800401	**96450-0800402**	80 x 40	0,9	250
96450-1000501	**96450-1000502**	100 x 50	0,9	200

96455

Magnetic labels

Sample order:
nlm 96455-0700202

Note:
These labels are small magnetic plaques for identifying the contents of store shelves. Product positions can be quickly and easily identified.
Other colours and dimensions available on request.

Order No. White	Order No. Yellow	length x width	Magnetic tape thickness
96455-0600101	**96455-0600102**	60 x 10	0,9
96455-0700201	**96455-0700202**	70 x 20	0,9
96455-0800301	**96455-0800302**	80 x 30	0,9
96455-1000401	**96455-1000402**	100 x 40	0,9
96455-1500501	**96455-1500502**	150 x 50	0,9
96455-2000801	**96455-2000802**	200 x 80	0,9

96460

Magnetic tape rolls

Sample order:
nlm 96460-301

Note:
Magnetic tape solves labelling problems. They adhere to any steel surface and can be repeatedly written on and wiped.
Other colours and dimensions available on request.

Order No. White	Order No. Yellow	Magnetic band: width (mm)	Magnetic tape thickness	Length
96460-301	**96460-302**	30	0,9	10 m
96460-401	**96460-402**	40	0,9	10 m

96465

Magnetic C profiles

Sample order:
nlm 96465-100030

Note:
Magnetic C profiles are full face magnetic strips for labelling shelves or for headers or name tags on planning boards. They are supplied with card backing and a transparent cover.
Other dimensions available on request.

Order No.	length x width
96465-100030	100 x 30
96465-100040	100 x 40
96465-150050	150 x 50

96470

Magnetic envelopes

Sample order:
nlm 96470-217155

Note:
Magnetic envelopes are used to hold documents accompanying the goods during the production process.

Order No.	length x height	for sheet size
96470-217155	217 x 155	DIN A5
96470-220300	220 x 300	DIN A4

96471

Magnetic envelopes

with strong magnetics

Sample order:
nlm 96471-217155

Note:
Standard magnetic envelopes do not provide sufficient hold by severe vibration or poor surface area i.e. wire crates. These magnetic envelopes have two strong neodymium magnets which simplify handling in such a way that an envelope only has to be thrown at the wire box. The magnets sealed into the envelopes seek their own surface and ensure a secure hold.

Order No.	length x height	for sheet size
96471-217155	217 x 155	DIN A5
96471-220300	220 x 300	DIN A4

96500

Net sleeves

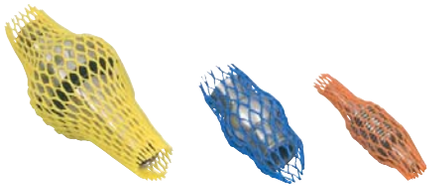

Material:
Polyethylene

Sample order:
nlm 96500-007X25000

Note for ordering:
Supplied on rolls only.

Note:
Effective protection for surfaces and delicate goods.
Very resistant to external influences and environmentally friendly (recyclable). Cut to length as required.
Good elastic properties return the sleeve to the original diameter, so can be reused many times.

Order No.	Recommended Ø	Colour	Length
96500-007X25000	7-15 mm	Orange	250 m / on the roll
96500-015X20000	15-25 mm	Blue	200 m / on the roll
96500-025X10000	25-50 mm	Yellow	100 m / on the roll
96500-050X10000	50-100 mm	Red	100 m / on the roll
96500-100X05000	100-200 mm	Green	50 m / on the roll
96500-200X05000	200-300 mm	Orange	50 m / on the roll
96500-300X05000	300-600 mm	White	50 m / on the roll

96510

Net mats

Material:
Polyethylene

Sample order:
nlm 96510-07500950

Note:
Effective protection for surfaces and delicate goods.
Very resistant to external influences and environmentally friendly (recyclable). Cut to size as required.

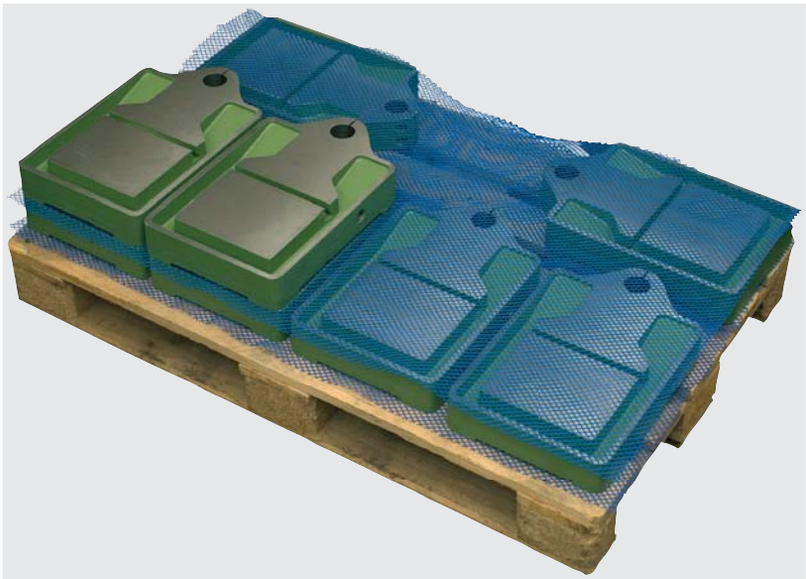

Order No.	Dimensions	Mesh size	Mat thickness	Colour
96510-07500950	750x950 mm	11x11 mm	3,8 mm	Blue
96510-078011804	780x1180 mm	4x4 mm	3,7 mm	black
96510-078011806	780x1180 mm	6x6 mm	2,8 mm	black

96610

Supercraft soft faced hammer

recoilless

Material:
Housing steel tube filled with steel balls.
Shaft steel tube with rubber grip or Hickory.
Inserts white nylon (grease and oil resistant).

Sample order:
nlm 96610-05002

Note:
Inserts to reorder 96614.

Order No.	Version	Head-Ø	Height	Length
96610-03001	with wooden shaft	30	110	330
96610-04001	with wooden shaft	40	115	360
96610-05001	with wooden shaft	50	120	370
96610-06001	with wooden shaft	60	145	370
96610-03002	with steel tube shaft	30	110	290
96610-04002	with steel tube shaft	40	115	300
96610-05002	with steel tube shaft	50	120	310
96610-06002	with steel tube shaft	60	145	325

96614

Hammer inserts

for Supercraft hammers

Material:
White nylon, grease and oil resistant.

Sample order:
nlm 96614-04001

Order No.	for Head-Ø	Suitable for Supercraft soft hammers
96614-03001	30	96610-030..
96614-04001	40	96610-040..
96614-05001	50	96610-050..
96614-06001	60	96610-060..

96630

Taper cleaners

for Morse tapers

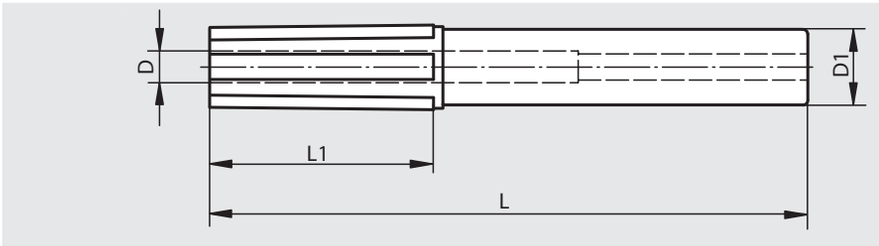

Material:
Plastic, felt facing.

Sample order:
nlm 96630-001

Note:
For cleaning Morse taper tool holders. The taper cleaner consists of a plastic body with form retentive felt facing. No abrasive particles remain in the felt material, dirt particles collect in the large gaps between the felt strips.

Order No.	Size	D	D1	L	L1
96630-001	MK 1	-	22	136	59
96630-002	MK 2	10	24	190	71
96630-003	MK 3	13	24	196	87
96630-004	MK 4	17	24	222	110
96630-005	MK 5	21	30	258	136
96630-006	MK 6	29	34	315	195

96632

Taper cleaners

for short tapers

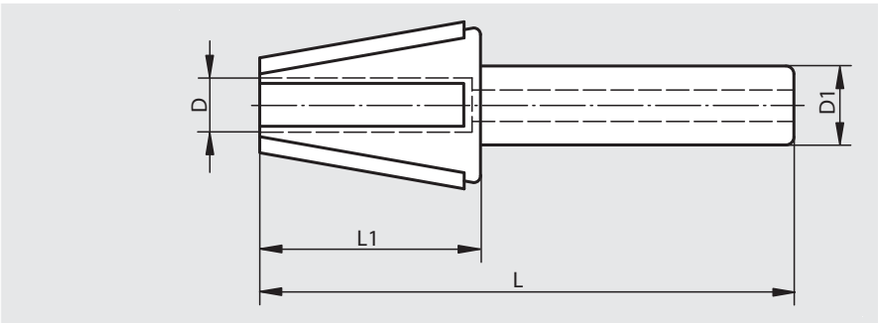

Material:
Plastic, felt facing.

Sample order:
nlm 96632-020

Note:
For cleaning short taper tool holders. The taper cleaner consists of a plastic body with form retentive felt facing. No abrasive particles remain in the felt material, dirt particles collect in the large gaps between the felt strips.

Order No.	Size	D	D1	L	L1
96632-020	SK 20	7,5	15	102	39
96632-030	SK 30	9,5	24	168	55
96632-040	SK 40	16	24	188	73
96632-045	SK 45	21	26	215	96
96632-050	SK 50	26	30	240	116

Taper cleaners

for hollow shank tapers

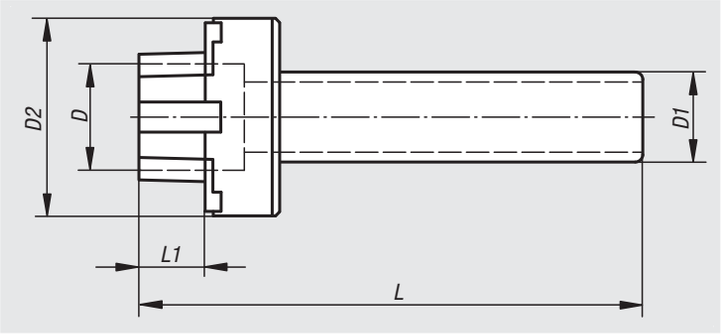

Material:
Plastic, felt facing.

Sample order:
nlm 96634-025

Note:
For cleaning hollow shank taper tool holders. The taper cleaner consists of a plastic body with form retentive felt facing. No abrasive particles remain in the felt material, dirt particles collect in the large gaps between the felt strips.

Order No.	Size	D	D1	D2	L	L1
96634-025	HSK 25	14	22	33	114	9
96634-032	HSK 32	17	24	35	138	10
96634-040	HSK 40	22,2	24	45	142	13
96634-050	HSK 50	27,5	24	53	152	17
96634-063	HSK 63	35	30	66	168	22
96634-080	HSK 80	44	30	83	178	27
96634-100	HSK 100	57	30	103	199	34

96636

Cylinder cleaners

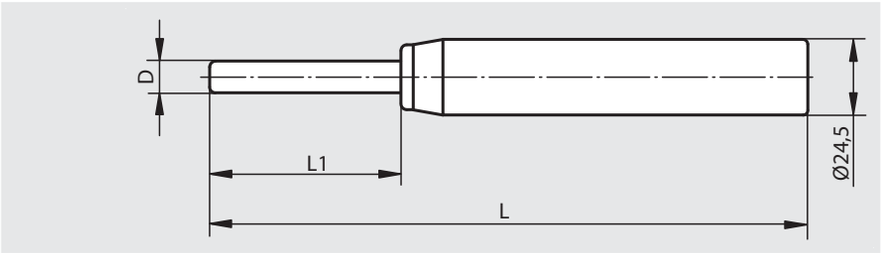

Material:
Body ABS;
cleaner PA-flock,
holohedrally coated

Sample order:
nlm 96636-006

Note:
For gentle and efficient cleaning of cylindrical tool holders and bores of every kind.

Order No.	D	L	L1
96636-006	6	158	37
96636-008	8	158	37
96636-010	10	168	47
96636-012	12	168	47
96636-014	14	168	47

96638

Cylinder cleaners

two-part

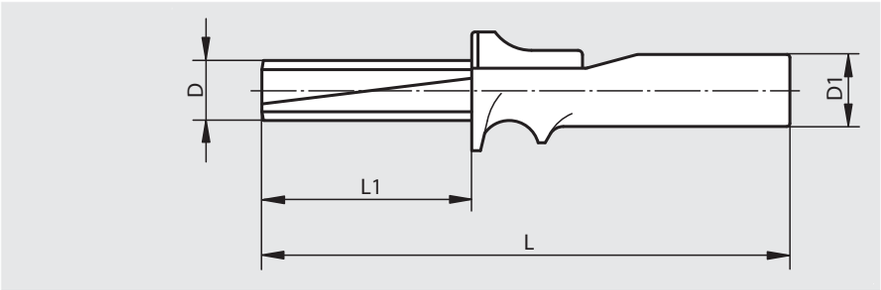

Material:
Body ABS.
Cleaner felt facing.

Sample order:
nlm 96638-016

Note:
For gentle and efficient cleaning of cylindrical tool holders and bores of every kind.

Application:
1. Push the thumb button to draw cleaning pads in.
2. Releasing the thumb button, rotate 360°, pull out.

Order No.	D	D1	L	L1
96638-016	16	24	176	70
96638-018	18	24	176	70
96638-020	20	24	176	70
96638-025	25	24	186	80
96638-032	32	30	221	100
96638-040	40	30	226	105
96638-042	42	30	226	105

Hook wrench with lug

DIN 1810A enhanced

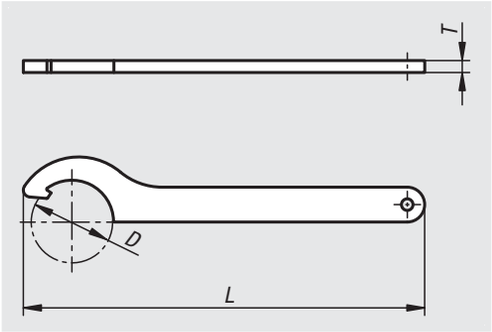

Material:
Special steel.

Version:
Hardened and annealed in black oxide tone.

Sample order:
nlm 96650-012014

Note:
For DIN 1804 slotted round nuts, DIN 981 bearing nuts and for our levelling sets 27700 to 27708 (two hook wrenches will be required for the levelling sets). With rounded edges for better handling.

Order No.	D min.	D max.	L	T	for slotted nuts DIN 1804	for bearing locknuts DIN 981
96650-012014	12	14	110	3	-	-
96650-016020	16	20	110	3	M6, M8	M10
96650-025028	25	28	136	4	M10, M12	M16
96650-030032	30	32	136	4	M14, M16	M18, M20
96650-034036	34	36	170	5	M18, M20	M22
96650-038045	38	45	170	5	M26	M24 - M30
96650-040042	40	42	170	5	M22, M24	M26, M28
96650-045050	45	50	206	6	M26 - M30	M32, M35
96650-052055	52	55	206	6	M32, M35	M38
96650-058062	58	62	240	7	M38 - M42	M42 - M45
96650-065070	65	70	240	7	-	M48 - M52
96650-068075	68	75	240	7	M45 - M50	M50 - M55
96650-080090	80	90	280	8	M52 - M60	M60 - M70

Face pin spanner

adjustable, cranked

Material:
Steel.

Version:
Black oxidised.

Sample order:
nlm 96651-08

Note:
Assembly tool for screwing in the flat versions of the locating bushes ball lifting pins 07781.
D1 pertains to dimension D1 of the locating bush for ball lifting pins.

Order No.	D1
96651-08	8/10/12
96651-16	16/20

Notes

97000

Lubricants
Adhesives
Grease nipples

97900

Klüber "Quietsch-Ex"

Sample order:
nlm 97900-250

Safety:
Safety information is available on our internet site.

Description:
"Quietsch-Ex" (no squeak) the universal lubricant for industry, home, garden, automobile, motorbike, hobby and sport.

Application:
Approved for lubricating bearings, slides, chains, locks and hinges.
Cleaning and lubricating oil for the motorbike and to protect machines, equipment, tools and vehicles, etc., from corrosion, e.g. in winter.
It is particularly good for machines and equipment, which are often used outdoors in all weathers.
Rusty screws, hinges and bolts that are rusted solid can be loosened or moved again without destroying them.

Advantages:
Lubricates, repels moisture, counteracts corrosion, improves sliding, loosens rust, protects from freezing and is also good for sawing and drilling.
It penetrates into the smallest gap and reaches every accessible friction point.

Order No.	Container	Viscosity class
97900-250	250 ml spray	ISO VG 32

97901

Klüber lubricating paste

Sample order:
nlm 97901-060

Safety:
Safety information is available on our internet site.

Description:
Klüber 46 MR 401 paste is a white multi-purpose lubricating paste, which provides very high reliability against friction, wear and friction rust.

Application:
Approved as a lubricant for long-term and lifetime lubrication, as an assembly aid and a thread lubricant for CrNi fastenings. Kluber paste is an assembly aid by press fits, it also brings advantages and safety anywhere that low slide speeds, very high pressures, high wear, stick-slip, oscillating movements, vibrations and tribocorrosion occur.
Preferred uses are by low slide speeds, screw spindles, adjustment nuts, splined shafts, ball joints, pivot bearings, gear wheels, radial packing rings, O-ring seals, V-rings, elastic rubber collars and roller bearings.

Advantages:
Protects from corrosion, is water-resistant, actively adhesive and is neutral to non-ferrous metals. Due to the white colour, which after appliance forms an almost invisible highly efficient lubricating film, it is particularly suited for places in which dark pastes are undesirable for visual reasons and cleanliness is required.

Order No.	Container	Working temperature	NLGI Class
97901-060	60 g tube	-40 °C to 150 °C	1
97901-750	750 g can	-40 °C to 150 °C	1

97903

Klüber copper paste

lead-free

Description:
The copper paste “Wolfracoat C” is a metallic paste for temperatures up to 1200 °C.

Application:
A proven assembly, cutting, lubricating and fastener paste for plain bearings and slide points, chains, roller bearings, in foundries for cores and ejectors, in die-casting machines, exhaust systems of internal combustion engines and furnaces.

Advantages:
The synthetic base oil evaporates at over 200 °C. A dry, metallic lubricant film gradually forms. Good lubrication of friction points with slide and rolling friction, good separation and lubrication for fastenings with static and dynamic friction, improved sliding for easy assembly of interference and transition fits, easy dismantling when loosening screw fastenings.

Sample order:
nlm 97903-400

Safety:
Safety information is available on our internet site.

Order No.	Container	Working temperature	NLGI Class
97903-060	60 g tube	-30 °C to 1200 °C, over 200 °C is a dry lubricant	2
97903-400	400 ml spray	-30 °C to 1200 °C, over 200 °C is a dry lubricant	2

97905

Klüber safety lubricating grease

Description:
The safety grease “Microlube GL 261” is a lubricant for high loads at low and high temperatures.

Application:
Lubricating grease for roller and plain bearings, sprockets, gear racks, small gears, adjustment gears, hoists and winches, roller guides, cams and cam plates.
Sealing and lubricating grease for oil and grease-resistant rubber seals such as radial packing rings, O-rings, cylinder and piston seals in pneumatics, rotary shaft lip seals (shaft seals), plastics, slide rails, sunroofs and seat rails.
Anticorrosive grease for bare metal parts, locks, fastening systems, ship fittings, antennas, battery poles and to counter saltwater corrosion.

Advantages:
The combination of ingredients in MICROLUBE increase the metallic surface contact area by micro-slide friction. This wear-free smoothing (friction-point tempering) counteracts corrosion and fitting rust.

Sample order:
nlm 97905-250

Safety:
Safety information is available on our internet site.

Order No.	Container	Working temperature	NLGI Class	Rev. characteristic n x dm
97905-250	250 ml spray	-30 °C to 140 °C	1	3X100000
97905-400	400 g cartridge	-30 °C to 140 °C	1	3X100000

97907

Klüber molybdenum disulphide lubricant

Description:
The molybdenum disulphide lubricant UNIMOLY GL 82 is a lubricating grease with MoS2 for improved fail-safe performance.

Application:
Proven use with roller and plain bearings, slide rails and guides, cams and cam plates, bolts, joints, hinges, cardan shafts, gear racks, screw spindles in all machine and plant construction.
A proven lubricant for wheel bearings and a multi-purpose lubricant for king pins, track and rod joints, cardan shafts and spline shafts.

Advantages:
Contains molybdenum disulphide (MoS2) for improved wear protection by boundary lubrication, waterproof and corrosion preventive.
Based on automobile manufacturers‘ requirements.

Sample order:
nlm 97907-1000

Safety:
Safety information is available on our internet site.

Order No.	Container	Working temperature	NLGI Class	Rev. characteristic n x dm
97907-0400	400 g cartridge	-20 °C to 130 °C	2	5X100000
97907-1000	1 kg can	-20 °C to 130 °C	2	5X100000

97909

Klüber liquid chain grease

Description:
STRUCTOVIS BHD liquid chain grease is „chain honey“ for drive and control chains.

Application:
Approved for long-term lubrication for all drive and control chains. Also ideal for water damp chains or open running gear wheels and gearboxes, on forklifts, conveyors, packaging machines, textile machines, robots, paper and wood processing machines.
Ideal for long-term lubrication of motorcycle chains. Is not washed off by rain or water spray. Ideal for road racing, particularly for derailleur chains, rear derailleurs, sprockets. Protects and lubricates by sun, rain and snow.

Advantages:
Clings and sticks like honey. This „chain honey“ is colourless, transparent, creeps well, is wear and corrosion preventive, noise reducing and temperature resistant.

Sample order:
nlm 97909-250

Safety:
Safety information is available on our internet site.

Order No.	Container	Working temperature	Kinematic viscosity DIN 51561 at 40 °C mm^2/s
97909-250	250 ml spray	-5 °C to 120 °C	~4750

Klüber bonded coating

UNIMOLY C 220

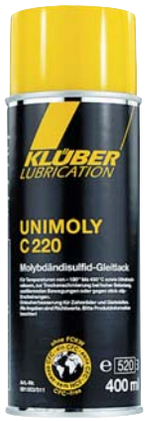

Description:
Bonded coatings consist of a solid lubricant, bonding agent and solvent. After it has been applied and dried, the bonded coating forms a thin lubricating layer that reduces friction and wear. It is dry, adheres firmly to the surface and cannot drip.

Application:
For dry lubricating under high loads, oscillating movements or to counter stick-slip. For lifetime lubrication of screw spindles, hinge pins, cylinder pins and during assembly. Improves wear on gearwheels and sprockets, reduces friction on cap screws.

Advantages:
Dry lubricants cannot drip, therefore a pollution of the environment, as by oil or grease-based lubricants, can be excluded.

Sample order:
nlm 97920-400

Safety:
Safety information is available on our internet site.

Order No.	Container	Working temperature	Water Hazard Class
97920-400	400 ml aerosol	-180 °C to 450 °C	WGK 2

Ballistol all-purpose oil

in food industry quality

Sample order:
nlm 97930-100200

Note:
Ballistol all-purpose oil is approved in the foodstuff industry for product contact surfaces. All Ballistol components are biodegradable and harmless to the environment.
It is skin-friendly and completely harmless if accidentally swallowed.
As spray without CFC.

Safety:
Safety information is available on our internet site.

Description:
Ballistol as a high-quality special oil combines anti-rust, lubricating oil, maintenance and cleaning agent with high creep-ability and disinfection power all in one.

Application:
The all-purpose oil is used versatilely in machine and tool manufacturing, for the fabrication and maintenance of precision devices, scales and in light engineering.
Due to its high pharmaceutical quality, it is outstandingly suited for the foods processing sector.
It finds multiple use in industrial art, industry, agriculture, housekeeping, garden, for automobiles, fishing, hunting and shooting, in the maintenance of metal, wood, plastic, leather, rubber, skin, fur and much more.

Advantages:
Due to its low surface tension and terrific creep ability, it penetrates into the narrowest nooks and finest cracks.
Ballistol forms an alkaline protective film on metals, neutralises hand sweat and other acidic rust promoting residues and thus protects against corrosion.
Its oil base is medicinally clean white oil. It is non-ageing and does not resinify ven after years.

Storage:
The packaging is tightly sealed, indefinitely durable.

Order No.	Container
97930-100200	200 ml aerosol
97930-100400	400 ml aerosol
97930-205000	5 litre liquid canister

Notes

Grease nipples

conical head DIN 71412

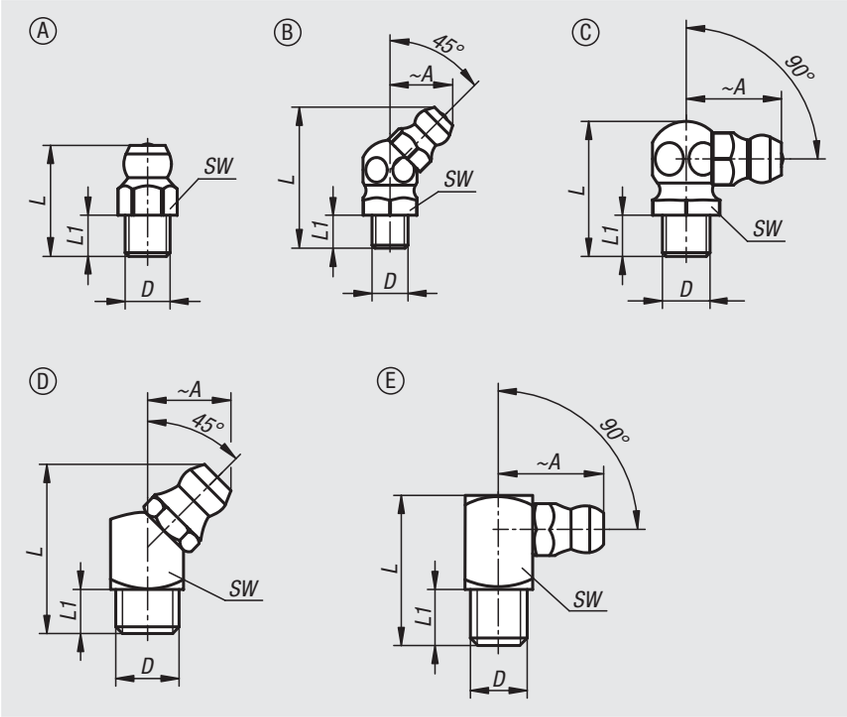

Material:
Steel or 1.4305 stainless steel

Version:
Steel hardened, min. 550 HV 1, galvanised.
Stainless steel bright.

Sample order:
nlm 97940-1106100

Note:
The conical head grease nipples have a tapered thread. They are suitable for grease points which must be lubricated often and reliably. Their versatility makes them the most widespread type of grease nipple.

Form A, straight

Order No. steel	Order No. stainless steel	Form	Type	D	L	L1	SW
97940-1106100	**97940-2106100**	A	hexagon	M06X1	15	5,5	7
97940-1108100	**97940-2108100**	A	hexagon	M8x1	15	5,5	9
97940-1108125	**97940-2108125**	A	hexagon	M08X1,25	15	5,5	9
97940-1110100	**97940-2110100**	A	hexagon	M10x1	15	5,5	11
97940-1110150	**97940-2110150**	A	hexagon	M10X1,5	15	5,5	11
97940-1118	**97940-2118**	A	hexagon	R1/8	15	5,5	11
97940-1114	**97940-2114**	A	hexagon	R1/4	17,5	6,5	14

Form B, 45°, hexagonal

Order No. steel	Order No. stainless steel	Form	Type	A	D	L	L1	SW
97940-1206100	**97940-2206100**	B	hexagon	10,5	M06X1	23,5	5,5	9
97940-1208100	**97940-2208100**	B	hexagon	10,5	M8x1	23,5	5,5	9
97940-1208125	**97940-2208125**	B	hexagon	10,5	M08X1,25	23,5	5,5	9
97940-1210100	**97940-2210100**	B	hexagon	11,5	M10x1	25	5,5	11
97940-1210150	**97940-2210150**	B	hexagon	11,5	M10X1,5	25	5,5	11
97940-1218	**97940-2218**	B	hexagon	11,5	R1/8	25	5,5	11
97940-1214	**97940-2214**	B	hexagon	12	R1/4	22,5	6,5	14

Grease nipples

conical head DIN 71412

Form C, 90°, hexagonal

Order No. steel	Order No. stainless steel	Form	Type	A	D	L	L1	SW
97940-1306100	**97940-2306100**	C	hexagon	13	M06X1	18	5,5	9
97940-1308100	**97940-2308100**	C	hexagon	13	M8x1	18	5,5	9
97940-1308125	**97940-2308125**	C	hexagon	13	M08X1,25	18	5,5	9
97940-1310100	**97940-2310100**	C	hexagon	14	M10x1	20	5,5	11
97940-1310150	**97940-2310150**	C	hexagon	14	M10X1,5	20	5,5	11
97940-1318	**97940-2318**	C	hexagon	14	R1/8	20	5,5	11
97940-1314	**97940-2314**	C	hexagon	14	R1/4	22	6,5	14

Form D, 45°, square

Order No.	Form	Main material	Type	A	D	L	L1	SW
97940-1406100	D	steel	square	10,5	M06X1	20,5	5,5	9
97940-1408100	D	steel	square	10,5	M8x1	20,5	5,5	9
97940-1408125	D	steel	square	10,5	M08X1,25	20,5	5,5	9
97940-1410100	D	steel	square	11	M10x1	20,5	5,5	11
97940-1418	D	steel	square	11	R1/8	20,5	5,5	11

Form E, 90°, square

Order No.	Form	Main material	Type	A	D	L	L1	SW
97940-1506100	E	steel	square	14	M06X1	18	5,5	9
97940-1508100	E	steel	square	14	M8x1	18	5,5	9
97940-1508125	E	steel	square	14	M08X1,25	18	5,5	9
97940-1510100	E	steel	square	15	M10x1	18	5,5	11
97940-1518	E	steel	square	15	R1/8	18	5,5	11

Grease nipple caps

for conical grease nipples

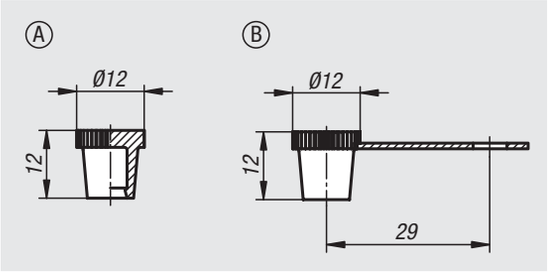

Material:
Polyethylene (PE-LLD).

Version:
red, green, yellow or black.

Sample order:
nlm 97941-911

Note:
Suitable for all DIN 71412 conical head grease nipples. They keep dirt out of the head of the nipple. The different colours are for e.g. identifying the lubrication intervals.

Application temperature: -70°C to +85°C.

Form A: without tab
Form B: with tab

Order No.	Form	Colour
97941-911	A	red
97941-912	A	green
97941-913	A	yellow
97941-914	A	black
97941-921	B	red
97941-922	B	green
97941-923	B	yellow
97941-924	B	black

Grease nipples

flush type, DIN 3405

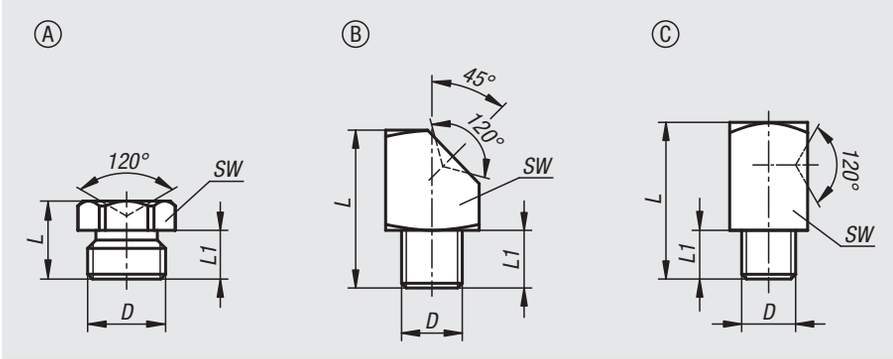

Material:
Steel or 1.4305 stainless steel

Version:
Steel galvanized.
Stainless steel bright.

Sample order:
nlm 97942-1106100

Note:
Flush type grease nipples are particularly suitable for flush or recessed installation.
By using flush type nipples, the required lubrication can also be carried out on points with poor accessibility.

Drawing reference:
Form A: straight
Form B: 45°
Form C: 90°

Order No.	Form	Main material	Type	D	L	L1	SW
97942-1106100	A	steel	hexagon	M06X1	9	6	7
97942-1108100	A	steel	hexagon	M8x1	9,5	6,5	9
97942-1108125	A	steel	hexagon	M08X1,25	9,5	6,5	9
97942-1110100	A	steel	hexagon	M10x1	9,5	6,5	11
97942-1118	A	steel	hexagon	R1/8	9,5	6,5	11
97942-2106100	A	stainless steel	hexagon	M06X1	9	6	7
97942-2108100	A	stainless steel	hexagon	M8x1	9,5	6,5	9
97942-2108125	A	stainless steel	hexagon	M08X1,25	9,5	6,5	9
97942-2110100	A	stainless steel	hexagon	M10x1	9,5	6,5	11
97942-2118	A	stainless steel	hexagon	G1/8	9,5	6,5	11
97942-1206100	B	steel	square	M06X1	15	5,5	9
97942-1208100	B	steel	square	M8x1	15	5,5	9
97942-1208125	B	steel	square	M08X1,25	15	5,5	9
97942-1210100	B	steel	square	M10x1	15	5,5	11
97942-1218	B	steel	square	R1/8	15	5,5	11
97942-1306100	C	steel	square	M06X1	18	5,5	9
97942-1308100	C	steel	square	M8x1	18	5,5	9
97942-1308125	C	steel	square	M08X1,25	18	5,5	9
97942-1310100	C	steel	square	M10x1	18	5,5	11
97942-1318	C	steel	square	R1/8	18	5,5	11

Grease nipples

button head DIN 3404

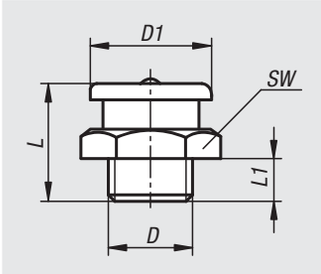

Material:
Steel or 1.4305 stainless steel

Version:
Steel galvanized.
Stainless steel bright.

Sample order:
nlm 97944-11006100

Note:
As the construction of button head grease nipples allow for a high lubrication flow rate, they are especially useful for lubrication points which require a large grease volume. Because of the robust design, button head grease nipples are preferred for machines that are subjected to high external stress.

Order No.	Main material	D	D1	L	L1	SW
97944-11006100	steel	M06X1	10	13,5	5,5	11
97944-11008100	steel	M8x1	10	13,5	5,5	11
97944-11010100	steel	M10x1	10	13,5	5,5	11
97944-11018	steel	G1/8	10	13,5	5,5	11
97944-11606100	steel	M06X1	16	17	6	17
97944-11608100	steel	M8x1	16	17	6	17
97944-11608125	steel	M08X1,25	16	17	6	17
97944-11610100	steel	M10x1	16	17	6	17
97944-11610150	steel	M10X1,5	16	17	6	17
97944-11612150	steel	M12x1,5	16	17	6	17
97944-11616150	steel	M16x1,5	16	18	7	17
97944-11618	steel	G1/8	16	17	6	17
97944-11614	steel	G1/4	16	17	6	17
97944-12216150	steel	M16x1,5	22	21,5	8	22
97944-12214	steel	G1/4	22	21,5	8	22
97944-12238	steel	G3/8	22	21,5	8	22
97944-21606100	stainless steel	M06X1	16	17	6	17
97944-21608100	stainless steel	M8x1	16	17	6	17
97944-21608125	stainless steel	M08X1,25	16	17	6	17
97944-21610100	stainless steel	M10x1	16	17	6	17
97944-21610150	stainless steel	M10X1,5	16	17	6	17
97944-21612150	stainless steel	M12x1,5	16	17	6	17
97944-21618	stainless steel	G1/8	16	17	6	17
97944-21614	stainless steel	R1/4	16	17	6	17
97944-22216150	stainless steel	M16x1,5	22	21,5	8	22
97944-22214	stainless steel	G1/4	22	21,5	8	22
97944-22238	stainless steel	G3/8	22	21,5	8	22

LOCTITE liquid epoxy metals

Sample order:
nlm 97990-3471500

Safety:
Visit our website to see the safety and technical data.

Repairs using epoxy liquid metal

Description:
LOCTITE metal set liquid metals are steel or aluminium-based epoxy resins. They set new standards in repairs: great strength, very good adhesion, no shrinkage, resistant to most solvents and lubricants. After hardening they can be worked like metal by hand or machine and can be painted over.
Cracks, porous spots, faulty holes or damage to pipes, tanks, chassis and machine parts can be quickly and durably repaired using LOCTITE metal set products. They adhere well to metals, glass, ceramics and other materials.

Type S1 – 97990-3471500
Suitable as filler. Steel based, two-component epoxy adhesive that is used to repair and reproduce damaged and worn parts.

Type S2 – 97990-3472500
Suitable for casting. Steel based, two-component epoxy adhesive that is used to repair and reproduce damaged and worn parts.

Type M – 97990-3474500
Suitable for filling. Mineral based, two-component epoxy adhesive that, after hardening forms a self-lubricating surface that reduces the wear on moving parts. The product is easy and practical to use and finds application in workshops or by maintenance work directly on site.

Order No.	Container	Intern. Ident. No.	Product	Mixture ratio	Handling strength in min.	Temperature resistance
97990-3471500	Pair of cans, 500 g	3471	Metal-Set S1	1:1	180	-20 °C – +120 °C
97990-3472500	Pair of cans, 500 g	3472	Metal-Set S2	1:1	180	-20 °C – +120 °C
97990-3474500	Pair of cans, 500 g	3474	Metal-Set M	1:1	180	-20 °C – +120 °C

97990

LOCTITE liquid epoxy metals

Sample order:
nlm 97990-3450025

Safety:
Visit our website to see the safety and technical data.

Twin syringe – Epoxy-liquid metal 97990-3450025
Two-component epoxy adhesive that after mixing quickly hardens at room temperature. The adhesive has a high strength on metal surfaces. The gap filling ability makes this adhesive ideal for use on rough and badly fitting faces made from metal, ceramic, Duroplast or wood.
The twin syringes automatically guarantee the correct mix ratio.

Repairs using epoxy liquid metal

Order No.	Container	Intern. Ident. No.	Product	Mixture ratio	Handling strength in min.	Temperature resistance
97990-3450025	25 ml	3450	Twin syringe	1:1	15	-55 °C – +100 °C

LOCTITE threadlocker

Sample order:
nlm 97990-2220050

Note:
LOCTITE threadlocker mid-strength, 97990-243... has a PW recommendation from the German Federal Ministry of Health in the D2 sealant joints industry based on an inspection carried out by the DVGW Research Institute: suitable for use in the foodstuffs and potable water industries.

* Values break-away torque acc. to ISO 10964.

Safety:
Visit our website to see the safety and technical data.

Description:
For use with all screw connections. Applied as a liquid, it hardens in the absence of air and on contact with metal after being screwed into the thread.

LOCTITE threadlocker low-strength, 97990-222....
To secure set and adjustment screws up to thread size M36. Even parts with a high length to diameter ratio can be loosened again. Prevents corrosion. Good vibration resistance. Easy to remove and adjust.
Temperature-resistant from -55 °C to +150 °C.

LOCTITE threadlocker mid-strength, 97990-243....
To lock and seal threaded connections up to M36. Also hardens on lightly oiled surfaces. Resists loosening by vibration. Can be loosened again with standard tools.
Temperature-resistant from -55 °C to +180 °C.
PW recommended.

LOCTITE threadlocker high-temperature, 97990-2720050
Provides high-strength locking of threaded connections for thread sizes up to M36. Temperature resistant up to 200 °C. Easily applied due to thixotropic components.
Temperature-resistant from -55 °C to +200 °C.

LOCTITE threadlocker capillary, 97990-290....
Locks and seals by capillary action when applied subsequently, e.g. by already tightened threads or in porosities and cracks. Secures pre-mounted bolts against vibration and loss of tension. For connections up to M8.
Temperature-resistant from -55 °C to +155 °C.

LOCTITE threadlocker high-strength, 97990-2701...
To secure and seal threaded connections up to M20, which no longer have to be loosened. Resists loosening by vibration under high dynamic load. The product is also suitable for high-strength fastening connections. Can only be removed after heating to 300 °C.
Temperature resistant from -55 °C to +150 °C

Thread lock

Order No.	Container	Intern. Ident. No.	Hardening system	Viscosity m Pa · s	Handling strength in min.	Ultimate hardness in hours	Break-away torque Nm	Thread size
97990-2220010	10 ml bottle	222	anaerobic	900-1500	15	12	6	≤M36
97990-2220050	50 ml bottle	222	anaerobic	900-1500	15	12	6	≤M36
97990-2430010	10 ml bottle	243	anaerobic	1300-3000	10	12	26	≤M36
97990-2430050	50 ml bottle	243	anaerobic	1300-3000	10	12	26	≤M36
97990-2720050	50 ml bottle	272	anaerobic	4000-15000	40	12	23	≤M36
97990-2900010	10 ml bottle	290	anaerobic	20-55	20	12	10	M6
97990-2900050	50 ml bottle	290	anaerobic	20-55	20	12	10	M6
97990-2701010	10 ml bottle	2701	anaerobic	500-900	10	12	38	≤M20
97990-2701050	50 ml bottle	2701	anaerobic	500-900	10	12	38	≤M20

LOCTITE universal adhesive

Sample order:
nlm 97990-4010050

Safety:
Visit our website to see the safety and technical data.

Description:
These adhesives bond metals, rubber, plastics and other materials with and to each other. Bonds strongly in a few seconds.

LOCTITE instant adhesive universal (cyanoacrylate), 97990-401....
This adhesive bonds the most varied material mixtures (metals, plastics, leather, rubber, wood, cardboard, ceramics, etc.) and achieves great strength by small gaps.
Temperature-resistant from -40 °C to +120 °C.

LOCTITE instant adhesive universal gel (cyanoacrylate), 97990-454....
This gel adhesive can be applied exactly where required, with no running and no drips, even on vertical surfaces. Bonds different materials, even porous materials.
Good gap-filling capacity.
Temperature-resistant from -40 °C to +120 °C.

LOCTITE instant adhesive for plastic and rubbers, 97990-4060770
The combination for plastics, contact adhesive 406 (cyanoacrylate) and the primer 770 for difficult to bond plastics e.g. polyethylene (PE) and polypropylene (PP).
Temperature-resistant from -40 °C to +120 °C.

Order No.	Container	Intern. Ident. No.	Hardening system	Viscosity m Pa · s	Handling strength in sec.	Ultimate hardness in hours	Adhesion gap in mm
97990-4010020	20 g bottle	401	air humidity	100	3-10	12	0,05-0,1
97990-4010050	50 g bottle	401	air humidity	100	3-10	12	0,05-0,1
97990-4060770	20/10 g set	406/770	air humidity	20	2-10	12	0,05-0,1
97990-4540020	20 g tube	454	air humidity	gel	5-10	12	0,05-0,1

LOCTITE thread sealant

Sample order:
nlm 97990-5110250

Note:
LOCTITE plastic thread sealant, 97990-5331100 has a PW recommendation from the German Federal Ministry of Health in the D2 sealant joints industry based on an inspection carried out by the DVGW Research Institute: suitable for use in the foodstuffs and potable water industries.

Safety:
Visit our website to see the safety and technical data.

Description:
The liquid thread sealant replaces hemp, pastes and PTFE-tapes.
Parts can be immediately realigned after jointing.

LOCTITE-liquid pipe thread sealant, 97990-511....
This product is for securing and sealing metal pipe threads and attachment parts. It hardens quickly by air deprivation between close fitting metal parts.
Temperature resistant from -55 °C to +150 °C.

Approvals:
DVGW approval (EN 751-1): NG-5146CQ0312

LOCTITE liquid pipe thread sealant low strength, 97990-577....
This product is for securing and sealing metal pipe threads and attachment parts. Especially suitable for use on stainless steel parts without the need to activate the surfaces. It hardens by air deprivation between close fitting metal parts and prevents independent loosening and leaking through knocks or vibration.
Temperature resistance from -55 °C to +150 °C.

Approvals:
P1 NSF Reg. No.: 123001
DVGW approval (EN 751-1): NG-5146AR0621
WRAS approval (BS 6920): 0711506

LOCTITE plastic thread seal, 97990-5331100
This product is recommended for sealing plastic thread connections on cold and warm water system plastic pipes, and plastic/metal combinations. It hardens through air humidity by ambient temperatures to a low strength, permanently elastic seal against cold and warm water.
Temperature resistant from -55 °C to +150 °C.

Approvals:
WRAS approval (BS 6920) for potable water: 0706521
DVGW approval (EN 751-1): NG-5146AR0618 P1
NSF Reg. No: 123620

sealing pipe threads

Order No.	Container	Intern. Ident. No.	Hardening system	Viscosity m Pa · s	Handling strength	Ultimate hardness in hours	Break-away torque Nm	Thread size
97990-5110050	50 ml bottle	511	anaerobic	9000-22000	25 min.	12	6	≤R3
97990-5110250	250 ml tube	511	anaerobic	9000-22000	25 min.	12	6	≤R3
97990-5770050	50 ml bottle	577	anaerobic	16000-33000	30 min.	24	11	≤R3
97990-5770250	250 ml tube	577	anaerobic	16000-33000	30 min.	24	11	≤R3
97990-5331100	100 ml tube	5331	air humidity	50000	immediately	12	1,5	≤R3

LOCTITE flange sealant

Sample order:
nlm 97990-5730250

Note:
* Skin formation time.

Safety:
Visit our website to see the safety and technical data.

Description:
The adaptability of liquid or paste flange sealants solves almost every sealant problem.

LOCTITE flange sealant low strength, 97990-573…
Resistant to the majority of lubricating and hydraulic oils, petrol, diesel and water. To seal close fitting joints between rigid metallic sealing and flange faces. The product hardens under air deprivation between close fitting metal surfaces. Typical applications are the production of liquid seals on torsionally stiff flange connections e.g. transmission and motor housings etc.
Temperature resistant from -55 °C to +150 °C.

LOCTITE flange sealant removable, 97990-5203300
To seal close fitting joints between rigid metallic sealing and flange faces. The product quickly hardens under air deprivation between close fitting metal surfaces. A seal against low pressures is produced shortly after the flange is mounted. Can be removed easily, is simply pulled off as a thin film. Typical applications are the production of liquid seals on torsionally stiff flange connections e.g. transmission and motor housings etc.
Temperature resistant from -55 °C to +150 °C.

LOCTITE flange sealant permanently elastic, 97900-5910300
Low strength flange sealant for flexible flanges. For plastic/plastic and plastic/metal combinations. Good resistance to oil and against relative movements. Typical applications are amongst others sealing flange like covers on such as control casings and oil tanks.
Temperature resistant from -55 °C to +200 °C.

Sealing faces

Order No.	Container	Intern. Ident. No.	Hardening system	Viscosity m Pa · s	Handling strength	Tensile shear strength N/mm²	Adhesion gap in mm
97990-5730050	50 ml bottle	573	anaerobic	13500-33000	9 hours	1,3	≤0,1
97990-5730250	250 ml tube	573	anaerobic	13500-33000	9 hours	1,3	≤0,1
97990-5731000	1000 ml can	573	anaerobic	13500-33000	9 hours	1,3	≤0,1
97990-5203300	300 ml cartridge	5203	anaerobic	50000-100000	10 min.*	1	≤0,125
97990-5910300	300 ml cartridge	5910	air humidity	paste	20 min.*	1,2	>0,3

LOCTITE adhesive and sealant

Sample order:
nlm 97990-5366310

Note:
* Skin formation time.

Safety:
Visit our website to see the safety and technical data.

Description:
For permanently elastic adhesive joints and a simultaneous sealant effect against water and dust, etc.

LOCTITE permanently elastic adhesive and sealant, 97990-5366310
Clear paste. Is used as an adhesive to optimally seal, glue and protect. Typical applications are the sealing of wall panels on trains, sealing heat sources (ovens, heat exchangers, steam pipes, hot water boilers), protection and insulation of switchboxes and gluing HCR silicon. Also used in the maintenance sector.
Temperature resistant from -50 °C to +200 °C.

LOCTITE permanently elastic black adhesive and sealant, 97990-5368310
Black paste. Used mainly to seal. Is also suitable for gluing and high temperature applications. Used in many industrial sectors, such as electrical household equipment and the automobile and airspace industries.
Temperature resistant from -50 °C to +200 °C.

LOCTITE high temperature resistant permanently elastic adhesive and sealant, 97990-5399310
Red paste. Used mainly to seal. Is also suitable for gluing and high temperature applications. Used mainly for industrial gluing and sealing applications in heating technology, industrial ovens, electrical household equipment and industrial heating systems.
Temperature resistant from -50 °C to +300 °C.

Elastic bonding and sealing

Order No.	Container	Intern. Ident. No.	Hardening system	Handling strength in min.	Tensile strength N/mm²	Elongation %	Hardness Shore A
97990-5366310	310 ml cartridge	5366	air humidity	5*	2	530	25
97990-5368310	310 ml cartridge	5368	air humidity	5*	2	435	26
97990-5399310	310 ml cartridge	5399	air humidity	5*	2,5	500	33

LOCTITE retaining compound

Sample order:
nlm 97990-6030010

Safety:
Visit our website to see the safety and technical data.

Description:
For bonding bushes, bearings and sleeves with push, interference and shrink fits.
Full surface contact prevents play, corrosion and contact rust.

LOCTITE retaining compound, oil-tolerant, 97990-603....
This product is used for gluing cylindrical fastener parts. It tolerates small amounts of oily dirt. Hardens under air deprivation between close fitting metal surfaces and prevents independent loosening and leaks caused by knocks and vibrations. Typical applications are amongst others securing roller bearings or oil impregnated bushes in bearing houses.
Temperature resistant from -55 °C to +150 °C.

LOCTITE retaining compound special, 97990-638....
The product is used for gluing cylindrical fastener parts, especially where a gap of up to 0.25 mm is present and maximum strength at room temperature is required. Hardens under air deprivation between close fitting metal surfaces and prevents independent loosening and leaks caused by knocks and vibrations.
Temperature resistant from -55 °C to +180 °C.

LOCTITE retaining compound universal, 97990-648....
This product is used for gluing cylindrical fastener parts. Hardens under air deprivation between close fitting metal surfaces and prevents independent loosening and leaks caused by knocks and vibrations. Typical applications are amonst others gluing gear wheels and chain sprockets to drive shafts.
Temperature resistant from -55 °C to +180 °C.

Bonds bushes and bearings

Order No.	Container	Intern. Ident. No.	Hardening system	Viscosity m Pa · s	Handling strength in min.	Adhesion gap in mm
97990-6030010	10 ml bottle	603	anaerobic	100-150	8	0,1
97990-6030050	50 ml bottle	603	anaerobic	100-150	8	0,1
97990-6380010	10 ml bottle	638	anaerobic	2000-3000	4	0,25
97990-6380050	50 ml bottle	638	anaerobic	2000-3000	4	0,25
97990-6480010	10 ml bottle	648	anaerobic	400-600	3	0,15
97990-6480050	50 ml bottle	648	anaerobic	400-600	3	0,15

LOCTITE cleaner

Sample order:
nlm 97990-7063400

Safety:
Visit our website to see the safety and technical data.

Description:
Cleaning increases the quality of sealed and bonded joints.

LOCTITE super clean, 97990-7063…
CFC free solvent based cleaner, used to clean and degrease surfaces. Ideal for preparing surfaces before applying adhesives or sealants. Quick, residue-free drying.

LOCTITE super clean, 97990-7070400
CFC free solvent based cleaner, used especially for cleaning, degreasing and preparing plastic parts before applying adhesives. Can be used as a spray or immersion bath by room temperature or by higher temperatures. Removes most greases, oils, lubricating liquids, metal swarf and fine particles from plastic parts without the danger of stress cracking. Compatible with metals and most plastics and elastomers.

LOCTITE adhesive and sealant remover, 97990-7080300
This product is used to help remove hardened chemical flange sealants in that it softens the sealant on the flange and so prevents damage caused by forcible scraping. After application a foaming film is formed that prevents the product running off the surface being treated. This allows it to work on the flange sealant for the required time. Typical application is the removal of all liquid flange sealants from metal flanges.

Surface preparation

Order No.	Container	Intern. Ident. No.
97990-7063150	150 ml aerosol	7063
97990-7063400	400 ml vaporizer	7063
97990-7070400	400 ml vaporizer	7070
97990-7080300	400 ml aerosol	7200

LOCTITE activators

Description:
To harden cyanoacrylate (CA) adhesives and anaerobically hardened adhesives; activators are used in passive materials for rapid and complete hardening. To that end the liquid activator is applied to one or both surfaces of the joint before the adhesive is applied.

Sample order:
nlm 97990-7386000

Note:
The activators are supplied in 500 ml sets.

Safety:
Visit our website to see the safety and technical data.

Order No.	Activator type	Intern. Ident. No.	Open time	Carrier medium	Application
97990-7386000	activator for 3298	7386	1 hour	heptane	Only for single side activation
97990-7471000	activator T for anaerobic products	7471	30 days	acetone/isopropanol	Cure accelerator, may be applicated on both sides
97990-7649000	activator N for anaerobic products	7649	30 days	acetone	Can be applied to both sides of the fastening

Application equipment

Description:
Suitable equipment simplifies the work and promotes correct practice in handling LOCTITE products.

LOCTITE Peristaltic Hand Pump, 97990-9700100
This hand pump is an inexpensive, accurate hand dosing pump, which screws onto the 50 ml or the 250 ml pack.
LOCTITE screw locks and LOCTITE jointing products can be dosed from 0.01 to 0.4 ml with viscosities up to 30000 m Pa · s using this manual system. The system is functional in any situation, is non-drip and optimises product consumption. It also needs no cleaning and no connection for electricity or compressed air.

Teroson cartridge press, 97990-9150310
To hold standard cartridges with a content of 150/310 ml.
Stable plastic semi-shells for a regular use. With toothed rack drive.

Sample order:
nlm 97990-9700100

Order No.	Item name
97990-9700100	peristaltic hand pump
97990-9150310	teroson cartridge applicator

Notes

Technical data

Index and list of DIN Standards

Notes

Technical data for grey cast iron (cast iron with flake graphite)

If cast iron is used for the base of drilling, milling, turning fixtures etc, it can give these crucial advantages over traditional steel fixtures:

- Cast iron has very good vibration damping properties (ratio of cast iron's damping effect to that of steel = 1 : 4.3. See also the comparative diagram).
- Cast iron has good fail-safe properties and good resistance to corrosion.
- Cast iron is easy to machine.

Comparison diagram of oscillation amplitude

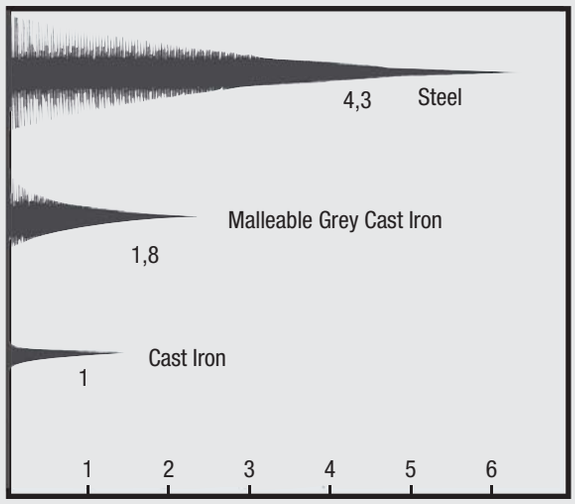

Micrograph of cast iron with flake graphite

Material			GJL 250	GJL 300
Tensile strength	R_m	N/mm²	250 – 350	300 – 400
0.1 technical elastic limit	$R_{p\,0,1}$	N/mm²	–	195 – 260
Elasticity limit 0,1	R_e	N/mm²	165 – 228	195 – 260
Compressive strength	δ_{dB}	N/mm²	840	960
Shearing strength	τ_{aB}	N/mm²	290	345
Modulus of elasticity	E	(kN/mm²)	103 – 118	108 – 137
Density	e	g/cm³	7,2	7,25
Hardness	–	HB 30	180 – 250	200 – 275
Coefficient of linear expansion	α	$1 \cdot 10^{-6}$/K	10	11,7

Length tolerances for special lengths:
Grey iron and aluminium profiles and steel and plastic offcuts (Group 01000) are mostly cut to length with saw cuts and they may therefore have the following length tolerances because of their variations relative to the standard design:

Linear Dimensions	Deviations in mm
100-290	+ 10 + 3
300-590	+ 15 + 8
over 600	+ 50 + 20

All other nominal sizes are according to "DIN ISO 2768-mk".

ISO fits for standard bores

DK 621.753.2(100) GERMAN STANDARDS August 1966

Tolerance examples for nominal diameter 60 mm

ID (bores) — OD (shafts) — Do not apply to nominal diameter 60 mm — Tolerance ranges acc. to DIN 7157 [1] — Series 1 — Series 2

ISO fits for standard bores

Tolerance ranges dimensions in µm

DIN 7154 sheet 1

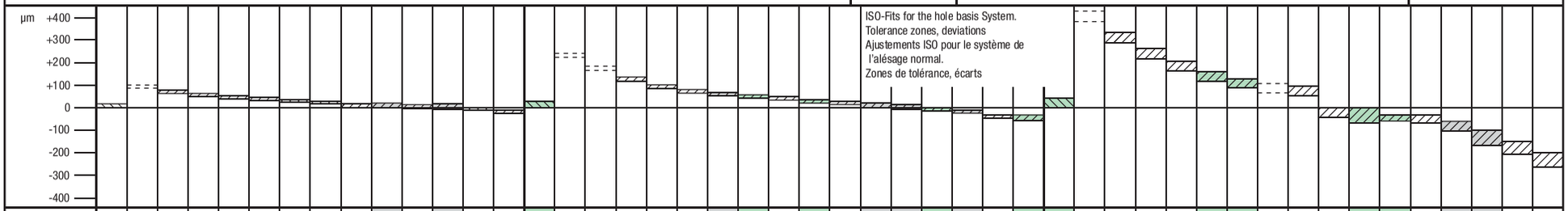

Nominal dimension range in mm	H6	u5	t5	s5	r5	p5	n5	m5	k5	k6	j5	j6	h5	g5	H7	za6	z6	x6	u6	t6	s6	r6	p6	n6	m6	k6	j6	h6	g6	f6	f7	H8	zc8	zb8	za8	z8	x8	u8	t8	s8	h8	h9	f7	f8	e8	d9	c9	b9
≥ 1	+6	+22	—	+18	+14	+10	+8	+6	+4	+6	+2	+4	0	-2	+10	+38	+32	+26	+24	—	+20	+16	+12	+10	+8	+6	+4	0	-2	-6	-6	+14	+74	+54	—	+40	+34	—	—	+28	0	0	-6	-6	-14	-20	-60	-140
≤ 3	0	+18		+14	+10	+6	+4	+2	0	0	-2	-2	-4	-6	0	+32	+26	+20	+18		+14	+10	+6	+4	+2	0	-2	-6	-8	-12	-16	0	+60	+40		+26	+20			+14	-14	-25	-16	-20	-28	-45	-85	-165
> 3	+8	+28	—	+24	+20	+17	+13	+9	+6	+9	+3	+6	0	-4	+12	+50	+43	+36	+31	—	+27	+23	+20	+16	+12	+9	+6	0	-4	-10	-10	+18	+98	+68	—	+53	+46	—	—	+37	0	0	-10	-10	-20	-30	-70	-140
≤ 6	0	+23		+19	+15	+12	+8	+4	+1	+1	-2	-2	-5	-9	0	+42	+35	+28	+23		+19	+15	+12	+8	+4	+1	-2	-8	-12	-18	-22	0	+80	+50		+35	+28			+19	-18	-30	-22	-28	-38	-60	-100	-170
> 6	+9	+34	—	+29	+25	+21	+16	+12	+7	+10	+4	+7	0	-5	+15	+61	+51	+43	+37	—	+32	+28	+24	+19	+15	+10	+7	0	-5	-13	-13	+22	+119	+89	+74	+64	+56	—	—	+45	0	0	-13	-13	-25	-40	-80	-150
≤ 10	0	+28		+23	+19	+15	+10	+6	+1	+1	-2	-2	-6	-11	0	+52	+42	+34	+28		+23	+19	+15	+10	+6	+1	-2	-9	-14	-22	-28	0	+97	+67	+52	+42	+34			+23	-22	-36	-28	-35	-47	-76	-116	-186
> 10 ≤ 14	+11	+41	—	+36	+31	+26	+20	+15	+9	+12	+5	+8	0	-6	+18	+75	+61	+51	+44	—	+39	+34	+29	+23	+18	+12	+8	0	-6	-16	-16	+27	+157	+117	+91	+77	+67	—	—	+55	0	0	-16	-16	-32	-50	-95	-150
> 14 ≤ 18	0	+33		+28	+23	+18	+12	+7	+1	+1	-3	-3	-8	-14	0	+64	+50	+40	+33		+28	+23	+18	+12	+7	+1	-3	-11	-17	-27	-34	0	+130	+90	+64	+50	+40			+28	-27	-43	-34	-43	-59	-93	-138	-193
> 18 ≤ 24	+13	+50	—	+44	+37	+31	+24	+17	+11	+15	+5	+9	0	-7	+21	—	+86	+67	+54	—	+48	+41	+35	+28	+21	+15	+9	0	-7	-20	-20	+33	+221	+169	+131	+106	+87	—	—	+68	0	0	-20	-20	-40	-65	-110	-160
> 24 ≤ 30	0	+41	—	+35	+28	+22	+15	+8	+2	+2	-4	-4	-9	-16	0		+73	+54	+41		+35	+28	+22	+15	+8	+2	-4	-13	-20	-33	-41	0	+188	+136	+98	+73	+54			+35	-33	-52	-41	-53	-73	-117	-162	-212
> 30 ≤ 40	+16	+59	—	+54	+45	+37	+28	+20	+13	+18	+6	+11	0	-9	+25	—	+101	+77	+61	+54													+251	+193	+151	+121	+97	+81										-120	-170
> 40 ≤ 50	0	+48		+43	+34	+26	+17	+9	+2	+2	-5	-5	-11	-20	0		+88	+64	+48	+41	+43	+34	+26	+17	+9	+2	-5	-16	-25	-41	-50	+39	+218	+160	+118	+88	+64	+48		+43	-39	-62	-50	-64	-89	-142	-182	-232
> 50 ≤ 65	+19	+65	—	+66	+54	+45	+33	+24	+15	+21	+6	+12	0	-10	+30	—	+128	+96	+76	+64	+59	+50	+42	+33	+25	+18	+11	0	-9	-25	-25	0	—	+239	+187	+151	+119	+99	—	+82	0	0	-25	-25	-50	-80	-130	-180
> 65 ≤ 80	0	+54		+53	+41	+32	+20	+11	+2	+2	-7	-7	-13	-23	0		+112	+80	+60	+48	+43	+34	+26	+17	+9	+2	-5	-16	-25	-41	-50			+200	+148	+112	+80	+48		+43	-39	-62	-50	-64	-89	-142	-192	-242
> 80 ≤ 100	+22	+79	—	+72	+56	+52	+38	+28	+18	+25	+6	+13	0	-12	+35	—	—	+113	+86	+70													+281	+219	+175	+136	+109										-140	-190
> 100 ≤ 120	0	+66	—	+59	+43	+37	+23	+13	+3	+3	-9	-9	-15	-27	0		—	+97	+70	+54													+242	+180	+136	+97	+70										-214	-264
				+86	+66													+141	+106	+85	+72	+60				+21	+12	0	-10	-30	-30	+46	—	+346	+272	+218	+168	+133	—	+99	0	0	-30	-30	-60	-100	-150	-200
				+71	+51													+122	+87	+66	+53	+41				+2	-7	-19	-29	-49	-60	0		+300	+226	+172	+122	+87		+53							-214	-264
					+69														+121	+94	+78	+62													+320	+256	+192	+148		+105	0	0	-36	-36	-72	-120	-180	-240
					+54														+102	+75	+59	+43													+274	+210	+146	+102		+59	-46	-74	-60	-76	-106	-174	-224	-274
																			+146	+113	+93	+73													+389	+312	+232	+178		+125							-170	-220
																			+124	+91	+71	+51													+335	+258	+178	+124		+71							-257	-307
																			+166	+126	+101	+76														+364	+264	+198	+158	+133							-180	-240
																			+144	+104	+79	+54														+310	+210	+144	+104	+79							-267	-327

Black numbers = GO limit
Green numbers = NO-GO limit
Fits for standard bores, fit tolerances (clearances and interferences) see DIN 7154, sheet 2
Fits for standard shaft, see DIN 7155, sheet 1 and sheet 2

[1]) DIN 7157 tolerance ranges are recommended.
Series 1 is preferable to Series 2

Continued on page 2

Amended August 1966: dimensions coordinated to ISO recommendations ISO/R 286-1962

Previous editions: DIN 7154: 10.36
DIN 7154 sheet 1: 12.50, 9.56

"Reproduced with permission of DIN Deutsches Institut für Normungen e.V.
The most recent edition of the standard available from Beuth Verlag GmbH, Burggrafenstrafle 4-10, 1000 Berlin 30 is the authoritative version"

Beuth-Vertrieb GmbH, Berlin 30 and Cologne 8.66 have monopoly rights for sale of standard sheets

norelem

DIN 7154 page2-sheet 1

Tolerance examples for nominal diameter 60 mm

ID (bores) — OD (shafts) — Do not apply to nominal diameter 60 mm — Tolerance ranges acc. to DIN 7157 [1]) — Series 1 / Series 2 — Dimensions in µm

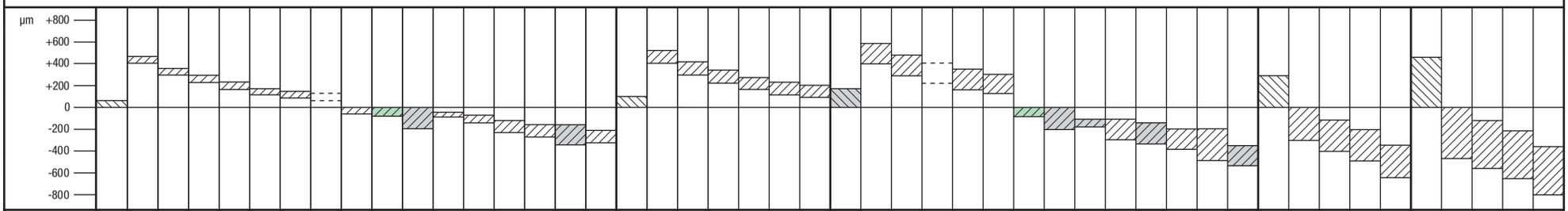

Nominal dimension range in mm	H9	zc9	zb9	za9	z9	x9	u9	t9	h8	h9	h11	f8	e9	d10	c10	c11	b10
≥ 1	+25	+85	+65	—	+51	+45	—	—	0	0	0	-6	-14	-20	-60	-60	-140
≤ 3	0	+60	+40		+26	+20			-14	-25	-60	-20	-39	-60	-100	-120	-180
> 3	+30	+110	+80	—	+65	+58	—	—	0	0	0	-10	-20	-30	-70	-70	-140
≤ 6	0	+80	+50		+35	+28			-18	-30	-75	-28	-50	-78	-118	-145	-188
> 6	+36	+133	+103	—	+78	+70	—	—	0	0	0	-13	-25	-40	-80	-80	-150
≤ 10	0	+97	+67		+42	+34			-22	-36	-90	-35	-61	-98	-138	-170	-208
> 10		+173	+133	—	+93	+83											
≤ 14	+43	+130	+90		+50	+40	—	—	0	0	0	-16	-32	-50	-95	-95	-150
> 14	0	+193	+151	—	+103	+88			-27	-43	-110	-43	-75	-112	-165	-205	-220
≤ 18		+150	+108		+60	+45											
> 18		+240	+188	+150	+125	+106	—										
≤ 24	+52	+188	+136	+98	+73	+54		—	0	0	0	-20	-40	-65	-110	-110	-160
> 24	0	+270	+212	+170	+140	+116	+100		-33	-52	-130	-53	-92	-149	-194	-240	-244
≤ 30		+218	+160	+118	+88	+64	+48										
> 30		+336	+262	+210	+174	+142	+122								-120	-120	-170
≤ 40	+62	+274	+200	+148	+112	+80	+60	—	0	0	0	-25	-50	-80	-220	-280	-270
> 40	0	+387	+304	+242	+198	+159	+132		-39	-62	-160	-64	-112	-180	-130	-130	-180
≤ 50		+325	+242	+180	+136	+97	+70								-230	-290	-280
> 50		+479	+374	+300	+245	+196	+161								-140	-140	-190
≤ 65	+74	+405	+300	+226	+172	+122	+87	—	0	0	0	-30	-60	-100	-260	-330	-310
> 65	0	—	+434	+348	+284	+220	+176		-46	-74	-190	-76	-134	-220	-150	-150	-200
≤ 80			+360	+274	+210	+146	+102								-270	-340	-320
> 80			+532	+422	+345	+265	+211								-170	-170	-220
≤ 100	+87	—	+445	+335	+258	+178	+124	—	0	0	0	-36	-72	-120	-310	-390	-360
> 100	0		—	+487	+397	+297	+231		-54	-87	-220	-90	-159	-260	-180	-180	-240
≤ 120				+400	+310	+210	+144								-320	-400	-380

Nominal dimension range in mm	H10	zc10	zb10	za10	z10	x10	u10	H11	zc11	zb11	za11	z11	x11	h9	h11	d9	d11	c11	b11	b12	a11
≥ 1	+40	+100	—	—	+66	—	—	+60	+120	—	—	—	—	0	0	-20	-20	-60	-140	-140	-270
≤ 3	0	+60			+26			0	+60					-25	-60	-45	-80	-120	-200	-240	-330
> 3	+48	+128	—	—	+83	—	—	+75	+155	—	—	—	—	0	0	-30	-30	-70	-140	-140	-270
≤ 6	0	+80			+35			0	+80					-30	-75	-60	-105	-145	-215	-260	-345
> 6	+58	+155	+125	—	+100	—	—	+90	+187	+157	—	—	—	0	0	-40	-40	-80	-150	-150	-280
≤ 10	0	+97	+67		+42			0	+97	+67				-36	-90	-76	-130	-170	-240	-300	-370
> 10		+200	+160	—	+120	—			+240	+200											
≤ 14	+70	+130	+90		+42		—	+110	+130	+90	—	—	—	0	0	-50	-50	-95	-150	-150	-290
> 14	0	+220	+178	—	+130	+115		0	+260	+218				-43	-110	-93	-160	-205	-260	-330	-400
≤ 18		+150	+108		+60	+45			+150	+108											
> 18		+272	+220	—	+157	+138			+318	+266	—	—									
≤ 24	+84	+188	+136		+73	+54	—	+130	+188	+136			—	0	0	-65	-65	-110	-160	-160	-300
> 24	0	+302	+244	—	+172	+148		0	+348	+290	—	+218		-52	-130	-117	-195	-240	-290	-370	-430
≤ 30		+218	+160		+88	+64			+218	+160		+88									
> 30		+374	+300	—	+212	+180	—		+434	+360	—	+272						-120	-170	-170	-310
≤ 40	+100	+274	+200		+112	+80		+160	+274	+200		+112	—	0	0	-80	-80	-280	-330	-420	-470
> 40	0	+425	+342	+280	+236	+197	+170	0	+485	+402	—	+296		-62	-160	-142	-240	-130	-180	-180	-320
≤ 50		+325	+242	+180	+136	+97	+70		+325	+242		+136						-290	-340	-430	-480
> 50		+525	+420	+346	+292	+242	+207		+595	+490	—	+362	+312					-140	-190	-190	-340
≤ 65	+120	+405	+300	+226	+172	+122	+87	+190	+405	+300		+172	+122	0	0	-100	-100	-330	-380	-490	-530
> 65	0	+600	+480	+394	+330	+266	+222	0	+670	+550	—	+400	+336	-74	-190	-174	-290	-150	-200	-200	-360
≤ 80		+480	+360	+274	+210	+146	+102		+480	+360		+210	+146					-340	-390	-500	-550
> 80		+725	+585	+475	+398	+318	+264		+805	+665	—	+478	+398					-170	-220	-220	-380
≤ 100	+140	+585	+445	+335	+258	+178	+124	+220	+585	+445		+258	+178	0	0	-120	-120	-390	-440	-570	-600
> 100	0	+830	+665	+540	+450	+350	+284	0	+910	+745	+620	+530	+430	-87	-220	-207	-340	-180	-240	-240	-410
≤ 120		+690	+525	+400	+310	+210	+144		+690	+525	+400	+310	+210					-400	-460	-590	-630

Nominal dimension range in mm	H12	h12	d12	b12	a12	H13	h13	d13	b13	a13
≥ 1	+100	0	-20	-140	-270	+140	0	-20	-140	-270
≤ 3	0	-100	-120	-240	-370	0	-140	-160	-280	-410
> 3	+120	0	-30	-140	-270	+180	0	-30	-140	-270
≤ 6	0	-120	-150	-260	-390	0	-180	-210	-320	-450
> 6	+150	0	-40	-150	-280	+220	0	-40	-150	-280
≤ 10	0	-150	-190	-300	-430	0	-220	-260	-370	-500
> 10										
≤ 14	+180	0	-50	-150	-290	+270	0	-50	-150	-290
> 14	0	-180	-230	-330	-470	0	-270	-320	-420	-560
≤ 18										
> 18										
≤ 24	+210	0	-65	-160	-300	+330	0	-65	-160	-300
> 24	0	-210	-275	-370	-510	0	-330	-395	-490	-630
≤ 30										
> 30				-170	-310				-170	-310
≤ 40	+250	0	-80	-420	-560	+390	0	-80	-560	-700
> 40	0	-250	-330	-180	-320	0	-390	-470	-180	-320
≤ 50				-430	-570				-570	-710
> 50				-190	-340				-190	-340
≤ 65	+300	0	-100	-490	-640	+460	0	-100	-650	-800
> 65	0	-300	-400	-200	-360	0	-460	-560	-200	-360
≤ 80				-500	-660				-660	-820
> 80				-220	-380				-220	-380
≤ 100	+350	0	-120	-500	-730	+540	0	-120	-760	-920
> 100	0	-350	-470	-240	-410	0	-540	-660	-240	-410
≤ 120				-590	-760				-780	-950

Black numbers = GO limit
Green numbers = NO-GO limit

[1]) DIN 7157 tolerance ranges are recommended.
Series 1 is preferable to Series 2

"Reproduced with permission of DIN Deutsches Institut für Normungen e.V.
The most recent edition of the standard available from Beuth Verlag GmbH, Burggrafenstrafle 4-10, 1000 Berlin 30 is the authoritative version"

ISO fits for standard shafts

DK 621.753.2(100) GERMAN STANDARDS August 1966

ISO fits for standard shafts

Tolerance ranges
dimensions in µm

DIN 7155 sheet 1

Tolerance examples for nominal diameter 60 mm

ID (bores) — OD (shafts) — Do not apply to nominal diameter 60 mm

Tolerance ranges acc. to DIN 7157 [1]) — Series 1 — Series 2

ISO -Fits for the shaft basis System. Tolerance zones, deviations
Ajustements ISO pour le système de l'arbre normal. Zones de tolérance, écarts

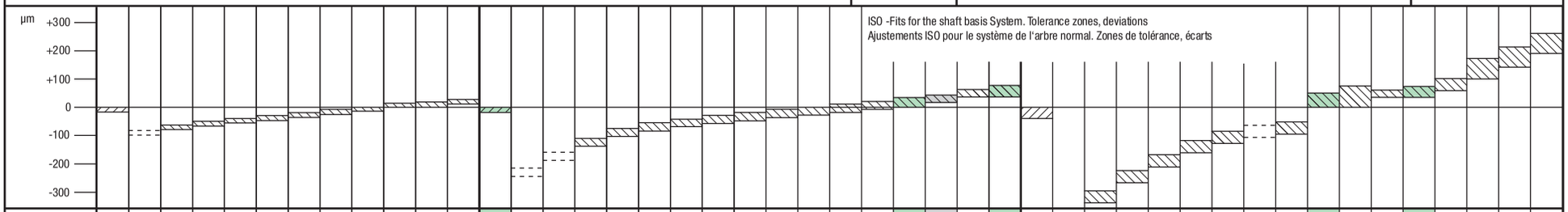

Nominal dimension range in mm	h5	U6	T6	S6	R6	P6	N6	M6	K6	J6	H6	G6	h6	ZA7	Z7	X7	U7	T7	S7	R7	P7	N7	M7	K7	J7	H7	G7	F7	F8	h8	ZC8	ZB8	ZA8	Z8	X8	U8	T8	S8	H8	H9	F7	F8	E8	D9	C9	B9
≥ 1	0	-18	—	-14	-10	-6	-4	-2	0	+2	+6	+8	0	-32	-26	-20	-18	—	-14	-10	-6	-4	-2	0	+4	+10	+12	+16	+20	0	-60	-40	—	-26	-20	—	—	-14	+14	+25	+16	+20	+28	+45	+85	+165
≤ 3	-4	-24		-20	-16	-12	-10	-8	-6	-4	0	+2	-6	-42	-36	-30	-28		-24	-20	-16	-14	-12	-10	-6	0	+2	+6	+6	-14	-74	-54		-40	-34			-28	0	0	+6	+6	+14	+20	+60	+140
> 3	0	-20	—	-16	-12	-9	-5	-1	+2	+5	+8	+12	0	-38	-31	-24	-19	—	-15	-11	-8	-4	0	+3	+6	+12	+16	+22	+28	0	-80	-50	—	-35	-28	—	—	-19	+18	+30	+22	+28	+38	+60	+100	+170
≤ 6	-5	-28		-24	-20	-17	-13	-9	-6	-3	0	+4	-8	-50	-43	-36	-31		-27	-23	-20	-16	-12	-9	-6	0	+4	+10	+10	-18	-98	-68		-53	-46			-37	0	0	+10	+10	+20	+30	+70	+140
> 6	0	-25	—	-20	-16	-12	-7	-3	+2	+5	+9	+14	0	-46	-36	-28	-22	—	-17	-13	-9	-4	0	+5	+8	+15	+20	+28	+35	0	-97	-67	-52	-42	-34	—	—	-23	+22	+36	+28	+35	+47	+76	+116	+186
≤ 10	-6	-34		-29	-25	-21	-16	-12	-7	-4	0	+5	-9	-61	-51	-43	-37		-32	-28	-24	-19	-15	-10	-7	0	+5	+13	+13	-22	-119	-89	-74	-64	-56			-45	0	0	+13	+13	+25	+40	+80	+150
> 10 ≤ 14	0	-30	—	-25	-20	-15	-9	-4	+2	+6	+11	+17	0	-57 -75	-43 -61	-33 -51	-26	—	-21	-16	-11	-5	0	+6	+10	+18	+24	+34	+43	0	-130 -157	-90 -117	-64 -91	-50 -77	-40 -67	—	—	-28	+27	+43	+34	+43	+59	+93	+138	+193
> 14 ≤ 18	-8	-41		-36	-31	-26	-20	-15	-9	-5	0	+6	-11	-70 -88	-53 -71	-38 -56	-44		-39	-34	-29	-23	-18	-12	-8	0	+6	+16	+16	-27	-150 -177	-108 -135	-77 -104	-60 -87	-45 -72			-55	0	0	+16	+16	+32	+50	+95	+150
> 18 ≤ 24	0	-37 -50	—	-31	-24	-18	-11	-4	+2	+8	+13	+20	0	—	-65 -86	-46 -67	-33 -54	—	-27	-20	-14	-7	0	+6	+12	+21	+28	+41	+53	0	-188 -221	-136 -169	-98 -131	-73 -106	-54 -87	—	—	-35	+33	+52	+41	+53	+73	+117	+162	+212
> 24 ≤ 30	-9	—	-37 -50	-44	-37	-31	-24	-17	-11	-5	0	+7	-13		-80 -101	-56 -77	-40 -61	-33 -54	-48	-41	-35	-28	-21	-15	-9	0	+7	+20	+20	-33	-218 -251	-160 -193	-118 -151	-88 -121	-64 -97	-48 -81		-68	0	0	+20	+20	+40	+65	+110	+160
> 30 ≤ 40	0	—	-43 -59	-38	-29	-21	-12	-4	+3	+10	+16	+25	0	—	-103 -128	-71 -96	-51 -76	-39 -64	-34	-25	-17	-8	0	+7	+14	+25	+34	+50	+64	0	—	-200 -239	-148 -187	-112 -151	-80 -119	-60 -99	—	-43	+39	+62	+50	+64	+89	+142	+182 +120	+232 +170
> 40 ≤ 50	-11		-49 -65	-54	-45	-37	-28	-20	-13	-6	0	+9	-16		—	-88 -113	-61 -86	-45 -70	-59	-50	-42	-33	-25	-18	-11	0	+9	+25	+25	-39		-242 -281	-180 -219	-136 -175	-97 -136	-70 -109			-82	0	0	+25	+25	+50	+80	+192 +130	+242 +180
> 50 ≤ 65	0	—	-60 -79	-47 -66	-35 -54	-26	-14	-5	+4	+13	+19	+29	0	—	—	-111 -141	-76 -106	-55 -85	-42 -72	-30 -60	-21	-9	0	+9	+18	+30	+40	+60	+76	0	—	-300 -346	-226 -272	-172 -218	-122 -168	-87 -133	—	-53 -99	+46	+74	+60	+76	+106	+174	+214 +140	+264 +190
> 65 ≤ 80	-13		—	-53 -72	-37 -56	-45	-33	-24	-15	-6	0	+10	-19			—	-91 -121	-64 -94	-48 -78	-32 -62	-51	-39	-30	-21	-12	0	+10	+30	+30	-46		—	-274 -320	-210 -256	-146 -192	-102 -148		—	-59 -105	0	0	+30	+30	+60	+100	+224 +150	+274 +200
> 80 ≤ 100	0	—	—	-64 -86	-44 -66	-30	-16	-6	+4	+16	+22	+34	0	—	—	—	-111 -146	-78 -113	-58 -93	-38 -73	-24	-10	0	+10	+22	+35	+47	+71	+90	0	—	—	-335 -389	-285 -312	-178 -232	-124 -178	—	-71 -125	+54	+87	+71	+90	+126	+207	+257 +170	+307 +220
> 100 ≤ 120	-15			—	-47 -69	-52	-38	-28	-18	-6	0	+12	-22				-131 -166	-91 -126	-66 -101	-41 -76	-59	-45	-35	-25	-13	0	+12	+36	+36	-54			—	-310 -364	-210 -264	-144 -198	-104 -158	-79 -133		0	0	+36	+36	+72	+120	+267 +180	+327 +240

Black numbers = GO limit
Green numbers = NO-GO limit
Fits for standard shaft, fit tolerances (clearances and interferences) see DIN 7155, sheet 2
Fits for standard borehole, see DIN 7154, sheet 1 and sheet 2

[1]) DIN 7157 tolerance ranges are recommended.
Series 1 is preferable to Series 2

Continued on page 2

Amended August 1966:
dimensions coordinated to
ISO recommendations ISO/R 286-1962

Previous editions: DIN 7155: 10.36
DIN 7155 sheet 1: 12.50, 9.56

"Reproduced with permission of DIN Deutsches Institut für Normungen e.V.
The most recent edition of the standard available from Beuth Verlag GmbH, Burggrafenstrafle 4-10, 1000 Berlin 30 is the authoritative version"

Beuth-Vertrieb GmbH, Berlin 30 and Cologne 8.66 have monopoly rights for sale of standard sheets

Tolerance examples for nominal diameter 60 mm

ID (bores) — OD (shafts) — Do not apply to nominal diameter 60 mm — Tolerance ranges acc. to DIN 7157 [1]) — Series 1 / Series 2 — Dimensions in µm

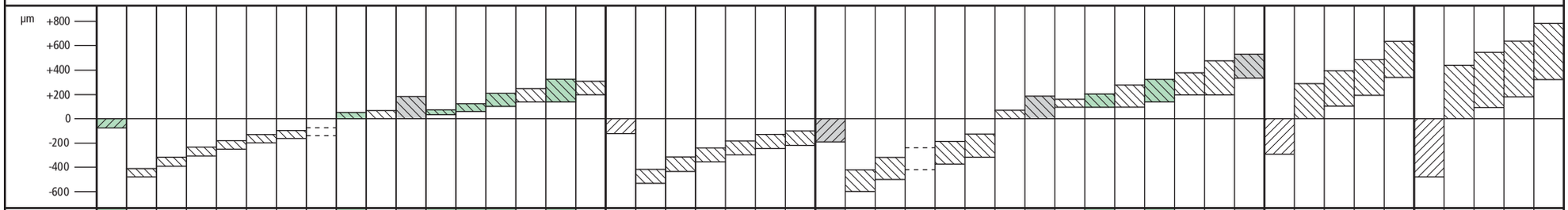

Nominal dimension range in mm	h9	ZC9	ZB9	ZA9	Z9	X9	U9	T9	H8	H9	H11	F8	E9	D10	C10	C11	B10	h10	ZC10	ZB10	ZA10	Z10	X10	U10
≥ 1	0	-60	-40	—	-26	-20	—	—	+14	+25	+60	+20	+39	+60	+100	+120	+180	0	-60	—	—	-26	—	—
≤ 3	-25	-85	-65		-51	-45			0	0	0	+6	+14	+20	+60	+60	+140	-40	-100			-66		
> 3	0	-80	-50	—	-35	-28	—	—	+18	+30	+75	+28	+50	+78	+118	+145	+188	0	-80	—	—	-35	—	—
≤ 6	-30	-110	-80		-65	-58			0	0	0	+10	+20	+30	+70	+70	+140	-48	-128			-83		
> 6	0	-97	-67	—	-42	-34	—	—	+22	+36	+90	+35	+61	+98	+138	+170	+208	0	-97	-67	—	-42	—	—
≤ 10	-36	-133	-103		-78	-70			0	0	0	+13	+25	+40	+80	+80	+150	-58	-155	-125		-100		
> 10	0	-130	-90	—	-50	-40	—	—	+27	+43	+110	+43	+75	+120	+165	+205	+220	0	-130	-90	—	-50	—	—
≤ 14		-173	-133		-93	-83			0	0	0	+16	+32	+50	+95	+95	+150	-70	-200	-160		-120		
> 14	-43	-150	-108	—	-60	-45													-150	-108	—	-60	-45	
≤ 18		-193	-151		-103	-88													-220	-178		-130	-115	
> 18	0	-188	-136	-98	-73	-54	—	—	+33	+52	+130	+53	+92	+149	+194	+240	+244	0	-188	-136	—	-73	-54	—
≤ 24		-240	-188	-150	-125	-106			0	0	0	+20	+40	+65	+110	+110	+160	-84	-272	-220		-157	-138	
> 24	-52	-218	-160	-118	-88	-64	-48												-218	-160	—	-88	-64	
≤ 30		-270	-212	-170	-140	-116	-100												-302	-244		-172	-148	
> 30	0	-274	-200	-148	-112	-80	-60	—	+39	+62	+160	+64	+112	+180	+220	+280	+270	0	-274	-200	—	-112	-80	—
≤ 40		-336	-262	-210	-174	-142	-122		0	0	0	+25	+50	+80	+120	+120	+170		-374	-300		-212	-180	
> 40	-62	-325	-242	-180	-136	-97	-70								+230	+290	+280	-100	-325	-242	-180	-136	-97	-70
≤ 50		-387	-304	-242	-198	-159	-132								+130	+130	+180		-425	-342	-280	-236	-197	-170
> 50	0	-405	-300	-226	-172	-122	-87	—	+46	+74	+190	+76	+134	+220	+260	+330	+310	0	-405	-300	-226	-172	-122	-87
≤ 65		-479	-374	-300	-246	-196	-161		0	0	0	+30	+60	+100	+140	+140	+190		-525	-420	-346	-292	-242	-207
> 65	-74	—	-360	-274	-210	-146	-102								+270	+340	+320	-120	-480	-360	-274	-210	-146	-102
≤ 80			-434	-348	-284	-220	-179								+150	+150	+200		-600	-480	-394	-330	-266	-222
> 80	0	—	-445	-335	-258	-178	-124	—	+54	+87	+220	+90	+159	+260	+310	+390	+360	0	-585	-445	-335	-258	-178	-124
≤ 100			-532	-422	-345	-265	-211		0	0	0	+36	+72	+120	+170	+170	+220		-725	-585	-475	-398	-318	-264
> 100	-87		—	-400	-310	-210	-144								+320	+400	+380	-140	-690	-525	-400	-310	-210	-144
≤ 120				-487	-397	-297	-231								+180	+180	+240		-830	-665	-540	-450	-350	-284

Nominal dimension range in mm	h11	ZC11	ZB11	ZA11	Z11	X11	H9	H11	D9	D10	D11	C11	B11	B12	A11	h12	H12	D12	B12	A12	h13	H13	D13	B13	A13
≥ 1	0	-60	—	—	—	—	+25	+60	+45	+60	+80	+120	+200	+240	+330	0	+100	+120	+240	+370	0	+140	+160	+280	+410
≤ 3	-60	-120					0	0	+20	+20	+20	+60	+140	+140	+270	-100	0	+20	+140	+270	-140	0	+20	+140	+270
> 3	0	-80	—	—	—	—	+30	+75	+60	+78	+105	+145	+215	+260	+345	0	+120	+150	+260	+390	0	+180	+210	+320	+450
≤ 6	-75	-155					0	0	+30	+30	+30	+70	+140	+140	+270	-120	0	+30	+140	+270	-180	0	+30	+140	+270
> 6	0	-97	-67	—	—	—	+36	+90	+76	+98	+130	+170	+240	+300	+370	0	+150	+190	+300	+430	0	+220	+260	+370	+500
≤ 10	-90	-187	-157				0	0	+40	+40	+40	+80	+150	+150	+280	-150	0	40	+150	+280	-220	0	+40	+150	+280
> 10	0	-130	-90	—	—	—	+43	+110	+93	+120	+160	+205	+260	+330	+400	0	+180	+230	+330	+470	0	+270	+320	+420	+560
≤ 14		-240	-200				0	0	+50	+50	+50	+95	+150	+150	+290	-180	0	+50	+150	+290	-270	0	+50	+150	+290
> 14	-110	-150	-108																						
≤ 18		-260	-218																						
> 18	0	-188	-136	—	—	—	+52	+130	+117	+149	+195	+240	+290	+370	+430	0	+210	+275	+370	+510	0	+330	+395	+490	+630
≤ 24		-318	-266				0	0	+65	+65	+65	+110	+160	+160	+300	-210	0	+65	+160	+300	-330	0	65	+160	+300
> 24	-130	-218	-160	—	-88																				
≤ 30		-348	-290		-218																				
> 30	0	-274	-200	—	-112		+62	+160	+142	+180	+240	+280	+330	+420	+470	0	+250	+330	+420	+560	0	+390	+470	+560	+700
≤ 40		-434	-360		-272	—	0	0	+80	+80	+80	+120	+170	+170	+310				+170	+310				+170	+310
> 40	-160	-325	-242	—	-136							+290	+340	+430	+480	-250	0	+80	+430	+570	-390	0	+80	+570	+710
≤ 50		-485	-402		-296							+130	+180	+180	+320				+180	+320				+180	+320
> 50	0	-405	-300	—	-172	-122	+74	+190	+174	+220	+290	+330	+380	+490	+530	0	+300	+400	+490	+640	0	+460	+560	+650	+800
≤ 65		-595	-490		-362	-312	0	0	+100	+100	+100	+140	+190	+190	+340			+100	+190	+340				+190	+340
> 65	-190	-480	-360	—	-210	-146						+340	+390	+500	+550	-300	0		+500	+660	-460	0	+100	+660	+820
≤ 80		-670	-550		-400	-336						+150	+200	+200	+360				+200	+360				+200	+360
> 80	0	-585	-445	—	-258	-178	+87	+220	+207	+260	+340	+390	+440	+570	+600	0	+350	+470	+570	+730	0	+540	+660	+760	+920
≤ 100		-805	-665		-478	-398						+170	+220	+220	+380				+220	+380				+220	+380
> 100	-220	-690	-525	-400	-310	-210	0	0	+120	+120	+120	+400	+460	+590	+630	-350	0	+120	+590	+760	-540	0	+120	+780	+950
≤ 120		-910	-745	-620	-530	-430						+180	+240	+240	+410				+240	+410				+240	+410

Black numbers = GO limit
Green numbers = NO-GO limit

[1]) DIN 7157 tolerance ranges are recommended.
Series 1 is preferable to Series 2

"Reproduced with permission of DIN Deutsches Institut für Normungen e.V.
The most recent edition of the standard available from Beuth Verlag GmbH, Burggrafenstrafle 4-10, 1000 Berlin 30 is the authoritative version"

Technical Information
General tolerances. Surface finishes

- norelem products are adapted and manufactured in such a way that they are suitable for their general purpose with reference to material and surface finish. As such, they meet all normal tolerance requirements.
- All dimensions are indicated in mm.
- All weights are approx. data.
- The latest DIN standard sheet version applies to all parts made to DIN standards.
- Variations on dimensions without tolerance values are according to "DIN ISO 2768-mk" (except linear dimensions of grey cast iron- and Al-profiles).

General Tolerances DIN ISO 2768 T1 and T2

General Tolerances for Linear and Angular Dimensions — DIN ISO 2768 T1

Tolerance class		Linear Dimensions							
		Permissible deviations in mm for ranges of nominal sizes							
designation	description	0,5 to 3	over 3 to 6	over 6 to 30	over 30 to 120	over 120 to 400	over 400 to 1000	over 1000 to 2000	over 2000 to 4000
f	fine	± 0,05	± 0,05	± 0,1	± 0,15	± 0,2	± 0,3	± 0,5	–
m	medium	± 0,10	± 0,10	± 0,2	± 0,30	± 0,5	± 0,8	± 1,2	± 2
c	coarse	± 0,20	± 0,30	± 0,5	± 0,80	± 1,2	± 2,0	± 3,0	± 4
v	very coarse	–	± 0,50	± 1,0	± 1,50	± 2,5	± 4,0	± 6,0	± 8

Tolerance class		External Radii and Chamfer Heights			Angular Dimensions				
		Permissible deviations in mm for ranges of nominal sizes			Permissible deviations in degrees or minutes for ranges of nominal sizes (shorten leg)				
designation	description	0,5 to 3	over 3 to 6	over 6	to 10	over 10 to 50	over 50 to 120	over 120 to 400	over 400
f	fine	± 0,2	± 0,5	± 1	± 1°	± 0°30‘	± 0°20‘	± 0°10‘	± 0° 5‘
m	medium								
c	coarse	± 0,4	± 1,0	± 2	± 1°30‘	± 1°30‘	± 0°30‘	± 0°15‘	± 0°10‘
v	very coarse				± 3°30‘	± 2°30‘	± 1°30‘	± 0°30’	± 0°20‘

General Tolerances for Form and Position — DIN ISO 2768 T2

Tolerance class	Tolerances in mm for Straightness and Flatness						Perpendicularity				Symmetry				Run-out
	Ranges of nominal sizes in mm						Ranges of nominal sizes in mm				Ranges of nominal sizes in mm				
	to 10	over 10 to 30	over 30 to 100	over 100 to 300	over 300 to 1000	over 1000 to 3000	to 100	over 100 to 300	over 300 to 1000	over 1000 to 3000	to 100	over 100 to 300	over 300 to 1000	over 1000 to 3000	
H	0,02	0,05	0,1	0,2	0,3	0,4	0,2	0,3	0,4	0,5	0,5				0,1
K	0,05	0,10	0,2	0,4	0,6	0,8	0,4	0,6	0,8	1,0	0,6		0,8	1	0,2
L	0,10	0,20	0,4	0,8	1,2	1,6	0,6	1,0	1,5	2,0	0,6	1,0	1,5	2	0,5

Method of Indicating Surface Finish to DIN ISO 1302

Graphical symbol of surface finish to DIN 3141	Surface finish values, R_a for permissible roughness height R_t assignation according to DIN 3141 line 1	line 2	meaning according to ISO 1302
(Surface without graphical symbol)			Surfaces which do not need to meet specific requirements
	even		Surfaces which only have to meet requirements of general evenness and better appearance
	rough		Individual raw surfaces which may be remachined
	6,3		Clean raw surface with higher requirements
	25	12,5	Surface with a roughness value which must not exceed the highest permissible medium roughness value
	6,3	3,2	
	1,6	0,8	

Technical Information
Screws and Nuts

The values for clamping forces F_{sp} and tightening torques M_{sp} specified in the table apply to standard metric thread according to DIN 13 and head contact surfaces according to DIN 912, 931-934, 6912, 7984, 7990.

The F_{sp} clamping force values result in a 90% utilisation of yield point σ 0.2 (DIN 267 pg. 3) subject to the respective coefficient of friction in threads.

It can be inferred from the table which screw with which quality is required for a particular coefficient of friction in thread in order to apply a given F_M assembly force ($F_{sp} >= F_M$).

The M_{sp} tightening torques are calculated based on the F_{sp} clamping forces assuming $\mu_G = \mu_K = \mu_{ges}$.

Determination of the M_{sp} tightening torque at 90 % yield point utilisation for a screw specified in size and quality is made according to the table at the right subject to the underhead friction occurring (μ_K), irregardless of a coefficient of friction in thread deviating from it.

To attain the applicable rated load torque it is still necessary to reduce half the spread of the designated torque wrench by the particular tightening torque M_{sp}.

Calculation of the table values and information for applications according to VDI guideline 2230.

Clamping force and tightening torques

Standard thread	μ_{total}* = μ_G = μ_K	Set screws clamping force F_{sp} in kN by grade			tightening torque M_{sp} in Nm by grade		
		8.8	10.9	12.9	8.8	10.9	12.9
M4	0,08	4,40	6,40	7,5	2,2	3,2	3,8
	0,10	4,20	6,20	7,3	2,5	3,7	4,3
	0,12	4,05	6,00	7,0	2,8	4,1	4,8
	0,14	3,90	5,70	6,7	3,1	4,5	5,3
M5	0,08	7,16	10,50	12,3	4,3	6,3	7,3
	0,10	6,90	10,10	11,9	4,9	7,2	8,5
	0,12	6,63	9,74	11,4	5,5	8,1	9,5
	0,14	6,36	9,34	10,9	6,0	8,9	10,4
M6	0,08	10,10	14,90	17,4	7,4	10,9	12,7
	0,10	9,74	14,30	16,7	8,5	12,5	14,7
	0,12	9,35	13,70	16,1	9,5	14,0	16,4
	0,14	8,97	13,20	15,4	10,4	15,3	17,9
M8	0,08	18,50	27,20	31,9	17,9	26,2	30,7
	0,10	17,90	26,20	30,7	20,6	30,3	35,5
	0,12	17,20	25,20	29,5	23,1	34,0	39,7
	0,14	16,50	24,20	28,3	25,3	37,2	43,6
M10	0,08	29,50	43,30	50,7	36,0	53,0	61,0
	0,10	28,40	41,80	48,9	41,0	61,0	71,0
	0,12	27,30	40,20	47,0	46,0	68,0	80,0
	0,14	26,20	38,50	45,1	51,0	75,0	88,0
M12	0,08	43,00	63,10	73,9	61,0	90,0	105,0
	0,10	41,40	60,90	71,2	71,0	104,0	122,0
	0,12	39,90	58,50	68,5	80,0	117,0	137,0
	0,14	38,30	56,20	65,8	87,0	128,0	150,0

Standard thread	μ_{total}* = μ_G = μ_K	Set screws clamping force F_{sp} in kN by grade			tightening torque M_{sp} in Nm by grade		
		8.8	10.9	12.9	8.8	10.9	12.9
M14	0,08	59,0	86,7	101,0	97	143	167
	0,10	56,9	83,6	97,8	113	165	194
	0,12	54,7	80,4	94,1	127	186	218
	0,14	52,6	77,2	90,3	139	205	239
M16	0,08	81,0	119,0	139,0	147	216	253
	0,10	78,2	115,0	134,0	172	252	295
	0,12	75,3	111,0	130,0	194	285	333
	0,14	72,4	106,0	124,0	214	314	367
M20	0,08	131,0	186,0	218,0	298	424	496
	0,10	126,0	180,0	210,0	347	494	578
	0,12	121,0	173,0	202,0	392	558	653
	0,14	117,0	166,0	194,0	431	615	719
M24	0,08	188,0	268,0	313,0	512	730	854
	0,10	182,0	259,0	303,0	597	850	995
	0,12	175,0	249,0	291,0	673	959	1122
	0,14	168,0	239,0	280,0	742	1057	1237
M30	0,08	300,0	430,0	500,0	1000	1450	1700
	0,10	290,0	415,0	485,0	1190	1700	2000
	0,12	280,0	400,0	465,0	1350	1900	2250
	0,14	270,0	385,0	450,0	1500	2100	2500
M36	0,08	440,0	630,0	730,0	1750	2500	3000
	0,10	425,0	600,0	710,0	2100	3000	3500
	0,12	410,0	580,0	680,0	2350	3300	3900
	0,14	395,0	560,0	660,0	2600	3700	4300

Screw stability according to DIN ISO 20898 T 1 (4.92)

Grades	5.8	6.8	8.8	10.9	12.9
Minimum tensile strength R_m N/mm²	500	600	800	1000	1200
Minimum yield point R_e N/mm²	400	480	640	900	1080
0.2-proof stress $R_{p0,2}$ N/mm²	–	–	640	900	1080
Test stress S_p N/mm²	364	440	582	792	950
Failure strain A_5 %	10	8	12	9	8
Impact strength (ISO test piece) Nm/cm²	–	–	60	40	30

The respective grades mean (as shown with 8.8):

$$\text{First number 8.} = \frac{\text{minimum tensile strength } R_m}{100} = 800 \text{ N/mm}^2$$

$$\text{Second number .8} = \frac{\text{minimum yield point } R_e}{\text{minimum tensile strength } R_m} \cdot 10 = 640 \text{ N/mm}^2 \text{ (80\% von } R_m)$$

Nut stability according to DIN ISO 20898 T 2 (2.94)

Grade ID numbers	5	6	8	10	12
Test stress S_p N/mm²	500	600	800	1000	1200

The grades mean (as shown with 10):

$$10 = \frac{\text{test stress } S_p}{100}$$

This test stress is equal to the minimum tensile strength of a screw that can be loaded when pairing with the corresponding nut up to the minimum yield point of the screw.

Technical Information
Screws and Nuts

The coefficients of friction (see table) fluctuate over a wide range. They fluctuate even when tightening and by production run of the same screws.
Because μ_G and μ_K are generally of different sizes a wide range of tightening torques arise as a result.
Calculation is performed using various coefficients of friction in accordance with VDI guideline 2230. By contrast Illgner/Blume in their „Schrauben Vademecum“ calculate using a coefficient of friction $\mu_{ges} = \mu_G = \mu_K$.

Here it proceeds according to VDI methods. However if μ_G and/or μ_K are unknown,
$\mu_G = 0{,}12$ or $\mu_K = 0{,}12$ would typically be used.

Coefficient of friction μ_G in the thread (according to Strelow or VDI 2230)

μ_G	Thread				External thread (screw)								
Thread	Material				Steel								
		Surface			black tempered or phosphated				galvanized (Zn6)		galvanized cadmium-plated (Cd6)		adhesive
			Tapping		rolled			machine-cut	machine-cut or rolled				
			Tapping	lubrication	dry	lubricated	MoS_2*	lubricated	dry	lubricated	dry	lubricated	dry
Internal thread (nut)	Steel	bright	machine-cut	dry	0,12	0,10*	0,08	0,10	–	0,10	–	0,08	0,16
		galvanized cadmium-plated			0,10	–	–	–	0,12	0,10	–	–	0,14
					0,08	–	–	–	–	–	0,12	0,12	–
	GJL/GJMB	bright			–	0,10	–	0,10	–	0,10	–	0,08	–
	AlMg	bright			–	0,08	–	–	–	–	–	–	–

* Molybdenum disulfide

Coefficient of friction µK on the head or nut engaging surface (according to Strelow or VDI 2230)

μ_K	Support suface				Screw head									
Support suface	Material				Steel									
		Surface			black tempered or phosphated						galvanized (Zn6)		galvanized cadmium-plated (Cd6)	
			Manu-facture		pressed			turned		smoothed	pressed			
			Manuf-acture	lubrication	dry	lubricated	MoS_2*	lubricated	MoS_2*	lubricated	dry	lubricated	dry	lubricated
Counter support	Steel	bright	smoothed	dry	–	0,16	–	0,10	–	0,16	0,10	–	0,08	–
			machined		0,12	0,10	0,08	0,10	0,08	–	0,10		0,08	0,08
		galvanized cadmium-plated			0,10		–	0,10	–	0,10	0,16	0,10	–	–
					0,08						–	–	0,12	0,12
	GJL/GJMB	bright	smoothed		–	0,10	–	–	–	0,10 to 0,18			0,08	–
			machined		–	0,14	–	0,10	–	0,14	0,10	0,10	0,08	–
	AlMg				–	0,08				–	–	–	–	–

* Molybdenum disulfide

Metric ISO Threads

The medium tolerance class applies to the threads listed, i.e. 6H for nut threads and 6g for bolt threads. The (metal) threads in this catalogue are manufactured according to these tolerance classes.

Technical Information about threads of aluminium grips:

Especially threads of aluminium grips cannot be true to gauge size due to final surface finish refinement and the removal of material during related pretreatment.
The majority of these threads are moulded in order to strengthen the material. As a result, the tearing resistance of aluminium for a thread with M5 x 10 is higher than 2000 N.

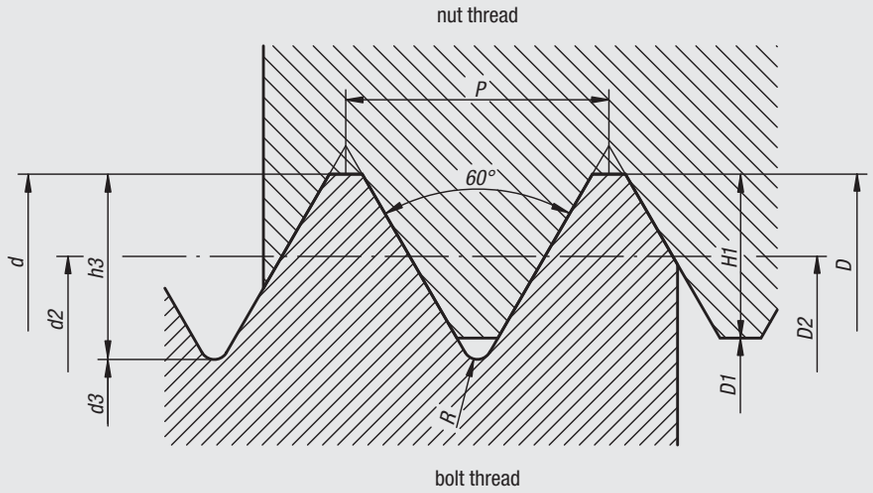

Coarse thread series 1

Thread description	Pitch	Thread-pitch Ø	Minor Ø		Thread depth		Radius	Core hole drill
			bolt	nut	bolt	nut		
d = D	P	d2 = D2	d3	D1	h3	H1	R	Ø
M 3	0,50	2,68	2,39	2,46	0,31	0,27	0,07	2,5
M 4	0,70	3,55	3,14	3,24	0,43	0,38	0,10	3,3
M 5	0,80	4,48	4,02	4,13	0,49	0,43	0,12	4,2
M 6	1,00	5,35	4,77	4,92	0,61	0,54	0,14	5,0
M 8	1,25	7,19	6,47	6,65	0,77	0,68	0,18	6,8
M10	1,50	9,03	8,16	8,38	0,92	0,81	0,22	8,5
M12	1,75	10,86	9,85	10,11	1,07	0,95	0,25	10,2
M16	2,00	14,70	13,55	13,84	1,23	1,08	0,29	14,0
M20	2,50	18,38	16,93	17,29	1,53	1,35	0,36	17,5
M24	3,00	22,05	20,32	20,75	1,84	1,62	0,43	21,0
M30	3,50	27,73	25,71	26,21	2,15	1,89	0,51	26,5
M36	4,00	33,40	31,09	31,67	2,45	2,17	0,58	32,0

Threads
Threads are manufactured to ISO DIN 13 medium tolerance class, i.e. 6H for nut threads and 6g for bolt threads. External threads up to 60 mm are generally supplied fully threaded. Screw lengths of 70 mm and more are supplied with 60 mm long threads.

Spot facing for countersunk screws and socket head screws

Spot facing model B:
– for countersunk screws DIN 7991.
Spot facing model J:
– for socket head screws DIN 6912.
Spot facing model K:
– for socket head screws DIN 912.

Note:
* Clearance hole medium according to DIN ISO 273.
** Clearance hole fine according to DIN ISO 273.
*** 90° counterbore or rounded, under 12 mm thread diameter only deburred.

Form A
Medium version (m)

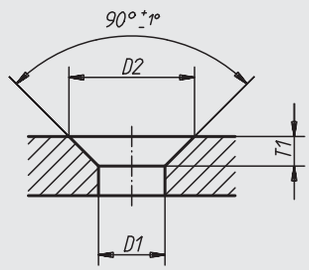

Form B
Fine version (f)

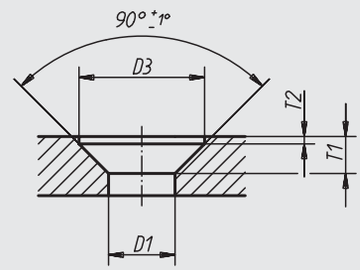

For Thread Ø	medium (m) version			fine (f) versions			
	D1 H13*	D2 H13	T1 ≈	D1 H12**	D3 H12	T1 ≈	T2 +0,1
M3	3,4	6,6	1,6	3,2	6,3	1,7	0,2
M4	4,5	9,0	2,3	4,3	8,3	2,4	0,4
M5	5,5	11,0	2,8	5,3	10,4	2,9	0,5
M6	6,6	13,0	3,2	6,4	12,4	3,3	0,5
M8	9,0	17,2	4,1	8,4	16,5	4,4	0,5
M10	11,0	21,5	5,3	10,5	20,5	5,5	0,5
M12	13,5	25,5	6,0	13,0	25,0	6,5	0,5
M16	17,5	31,5	7,0	17,0	31,0	7,5	0,5
M20	22,0	38,0	8,0	21,0	37,0	8,5	0,5

Form J, Form K

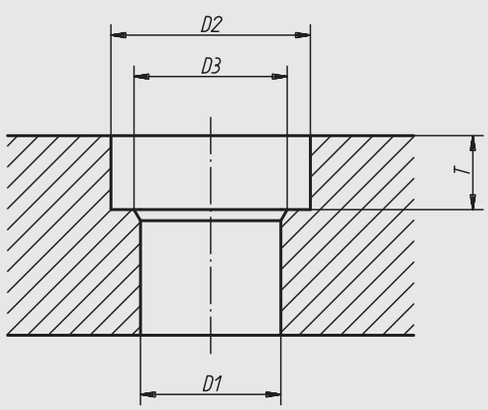

For Thread Ø	D1 medium (m) H13*	D1 fine (f) H12**	D2	D3***	T model J	T model K	acceptable deviation
M3	3,4	3,2	6	–	–	3,4	+0,2 0
M4	4,5	4,3	8	–	3,4	4,6	+0,4 0
M5	5,5	5,3	10	–	4,2	5,7	+0,4 0
M6	6,6	6,4	11	–	4,8	6,8	+0,4 0
M8	9,0	8,4	15	–	6,0	9,0	+0,4 0
M10	11,0	10,5	18	–	7,5	11,0	+0,4 0
M12	13,5	13,0	20	16	8,5	13,0	+0,4 0
M16	17,5	17,0	26	20	11,5	17,5	+0,4 0
M20	22,0	21,0	33	24	13,5	21,5	+0,4 0

DIN 78 thread ends
DIN 6332 thrust points

FL flat point

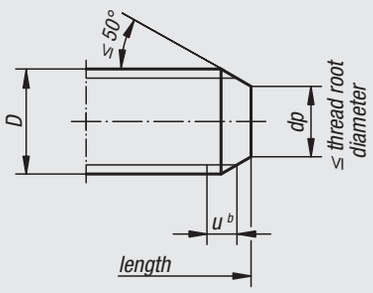

RN rounded end

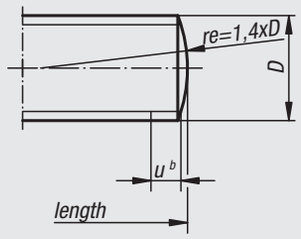

SD short dog

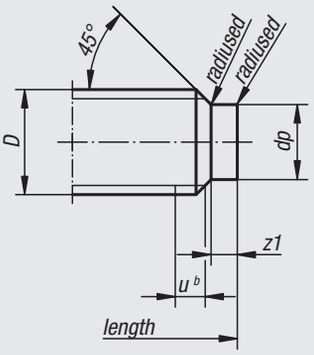

Standard form:
DIN EN ISO 4753 flat point.
Any other thread end available at extra cost, depending on the quantity ordered.

u^b = max. 2P incomplete thread

LD long dog

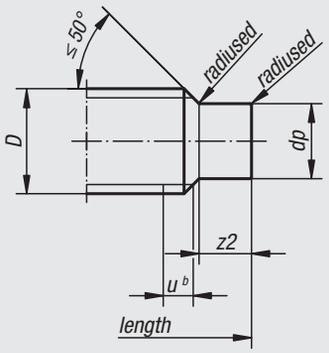

TC truncated cone

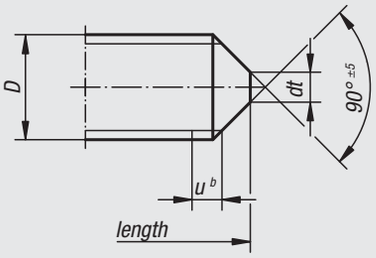

Ak rounded dog

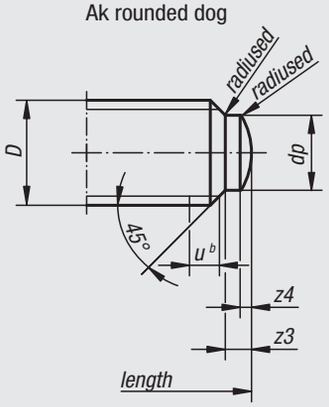

thrust point DIN 6332

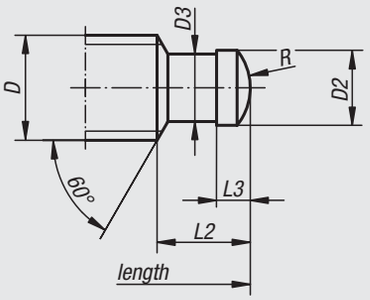

Thread- Ø	Thread ends to DIN EN ISO 4753						Thread ends with thrust points to DIN 6332				
D	dp h13	dt h16*	z1 + IT14	z2 + IT14	z3 + IT14	z4 ≈	D2 h11	D3 –0,1	L2	L3	R
M4	2,5	–	1,00	2,0	1,00	0,50	–	–	–	–	–
M5	3,5	–	1,25	2,5	1,25	0,60	–	–	–	–	–
M6	4,0	1,5	1,50	3,0	1,50	0,70	4,5	4,0	6,0	2,5	3
M8	5,5	2,0	2,00	4,0	2,00	1,00	6,0	5,4	7,5	3,0	5
M10	7,0	2,5	2,50	5,0	2,50	1,00	8,0	7,2	9,0	4,5	6
M12	8,5	3,0	3,00	6,0	3,00	1,25	8,0	7,2	10,0	4,5	6
M14	10,0	4,0	3,50	7,0	3,50	1,50	–	–	–	–	–
M16	12,0	4,0	4,00	8,0	4,00	1,75	12,0	11,0	12,0	5,0	9
M18	13,0	5,0	4,50	9,0	4,50	2,00	–	–	–	–	–
M20	15,0	5,0	5,00	10,0	5,00	2,00	15,5	14,4	14,0	5,5	13
M22	17,0	6,0	5,50	11,0	5,50	2,50	–	–	–	–	–
M24	18,0	6,0	6,00	12,0	6,00	2,50	–	–	–	–	–
M27	21,0	8,0	6,70	13,5	6,70	3,00	–	–	–	–	–

* Point up to 5 mm Ø thread end lightly flattened or lightly rounded.

Squares ends for spindles and operating parts

* Internal squares are allowed to be recessed in the middle third of each side. D max. defines the borehole diameter which leaves appropriate clearance when disposed concentrically to the internal square.

** External squares made on round steel bar may fall below the minimum size by the amount of tolerance on the steel bar, i.e. by h11.

A External square

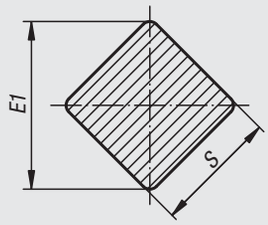

B Internal square

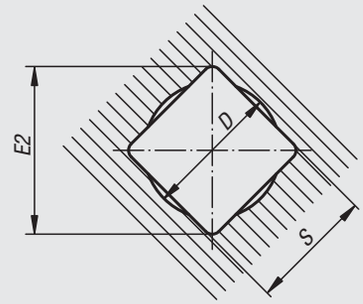

S H11/h11	D* max.	E1 max.	E1 min.**	E2 min.
4,0	4,2	5,0	4,8	5,3
5,0	5,3	6,5	6,0	6,6
5,5	5,8	7,0	6,6	7,2
6,0	6,3	8,0	7,2	8,1
7,0	7,3	9,0	8,4	9,1
8,0	8,4	10,0	9,6	10,1
9,0	9,5	12,0	10,8	12,1
10,0	10,5	13,0	12,0	13,1
11,0	11,6	14,0	13,2	14,1
12,0	12,6	16,0	14,4	16,1
13,0	13,7	17,0	15,6	17,1
14,0	14,7	18,0	16,8	18,1
16,0	16,8	21,0	19,2	21,2
17,0	17,9	22,0	20,4	22,2
19,0	20,0	25,0	22,8	25,2
22,0	23,1	28,0	26,4	28,2

T-slots

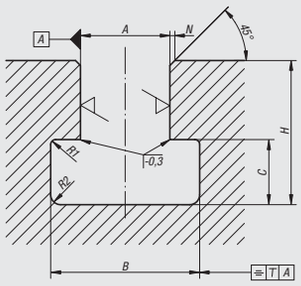

6,3 (= 1,6 for tolerance H8 or = 3,2 for tolerance H12)

A*	B	B adm. dev.	C	C adm. dev.	H max.	H min.	N max.	R1 max.	R2 max.	T
6	11,0	+1,5 0	5	+1 0	13	11	1,0	0,6	1,0	0,5
8	14,5		7		18	15				
10	16,0	+2 0	7		21	17				
12	19,0		8		25	20				
14	23,0		9	+2 0	28	23	1,6		1,6	
18	30,0		12		36	30		1,0		
22	37,0	+3 0	16		45	38			2,5	
28	46,0	+4 0	20		56	48				
36	56,0		25	+3 0	71	61	2,5			1,0
42	68,0		32		85	74		1,6	4,0	

* Tolerance H8 for tenon and clamping slots, H12 for clamping slots

norelem

Keyways and parallel keys

high form (sheet 1), high form for machine tools (sheet 2)

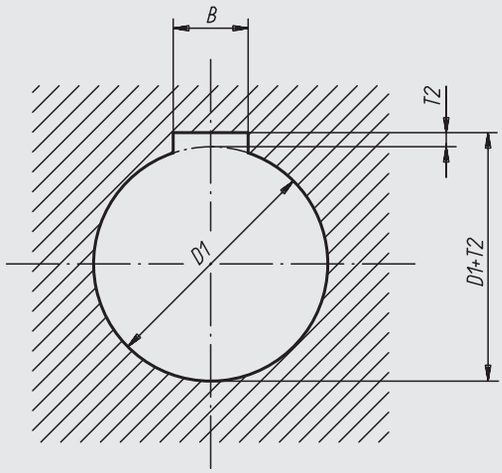

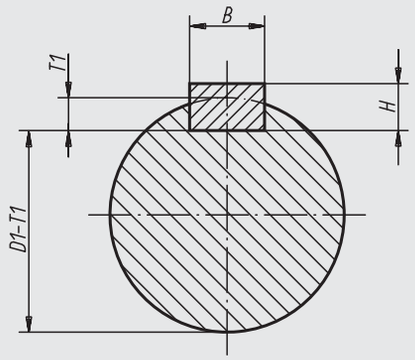

high form (sheet 1)

For shaft Ø D1	Shaft slot B* tight fit P9	Shaft slot B* sliding fit N9	Hub slot B* tight fit P9	Hub slot B* sliding fit JS9	H	T1 with top clearance	T2 by top clearance	T2 oversize
over 8 to 10	3	3	3	3	3	1,8 +0,1	1,4 +0,1	0,9 +0,1
over 10 to 12	4	4	4	4	4	2,5 +0,1	1,8 +0,1	1,2 +0,1
over 12 to 17	5	5	5	5	5	3,0 +0,1	2,3 +0,1	1,7 +0,1
over 17 to 22	6	6	6	6	6	3,5 +0,1	2,8 +0,1	2,2 +0,1
over 22 to 30	8	8	8	8	7	4,0 +0,2	3,3 +0,2	2,4 +0,2
over 30 to 38	10	10	10	10	8	5,0 +0,2	3,3 +0,2	2,4 +0,2
over 38 to 44	12	12	12	12	8	5,0 +0,2	3,3 +0,2	2,4 +0,2
over 44 to 50	14	14	14	14	9	5,5 +0,2	3,8 +0,2	2,9 +0,2
over 50 to 58	16	16	16	16	10	6,0 +0,2	4,3 +0,2	3,4 +0,2

high form for machine tools (sheet 2)

For shaft Ø D1	Shaft slot B* tight fit P9	Shaft slot B* sliding fit N9	Hub slot B* tight fit P9	Hub slot B* sliding fit JS9	H	T1	T2
over 10 to 12	4	4	4	4	4	3,0 +0,1	1,1 +0,1
over 12 to 17	5	5	5	5	5	3,8 +0,1	1,3 +0,1
over 17 to 22	6	6	6	6	6	4,4 +0,1	1,7 +0,1
over 22 to 30	8	8	8	8	7	5,4 +0,2	1,7 +0,2
over 30 to 38	10	10	10	10	8	6,0 +0,2	2,1 +0,2
over 38 to 44	12	12	12	12	8	6,0 +0,2	2,1 +0,2
over 44 to 50	14	14	14	14	9	6,0 +0,2	2,6 +0,2
over 50 to 58	16	16	16	16	10	7,5 +0,2	2,6 +0,2

* The indicated tolerances for slot widths apply, as a rule, for milled slots.
ISO quality IT8 (i.e. P8 instead of P9, N8 instead of N9 and IS8 instead of IS9) are recommended for the width of broached slots.
Tolerance H9 for the shaft keyway and D10 for the hub keyway are recommended for sliding fits.

ESD

Sensitive electrical or electronic equipment, components and devices (ESD sensitive elements) may be damaged or destroyed by electrostatic discharges (ESD) in the immediate vicinity.

Electrostatic discharges can come from people or through handling ESD sensitive components (e.g. during production, assembly, transport, storage etc).

Electrically conductive products which conform to
DIN EN 61340-5-1 –Protection of electronic devices from electrostatic phenomena–
are essential within electronic environments to prevent an electrostatic discharge.

Our products are manufactured from a special, electrically conductive plastic and can therefore be used for ESD applications or in ESD protection areas (EPA) in accordance with DIN EN 61340-5-1.

These high-quality products are regularly tested by us to assess their electrical conductivity in accordance with DIN EN 61340-5-1.

The yellow ESD logo is printed on the side of the product to clearly identify it.

These ESD products can also be used for devices, components and protection systems in areas with high risk of explosion.

Use of these ESD products prevents the occurrence of electrostatic spark discharges, eliminating the potential ignition of gases and dusts which could lead to explosions in enclosed spaces.

Manufacturers and operators must use and conform to ATEX directives for the protection of persons working in areas with high risk of explosion.

These ESD products are certified by TÜV-Süd in relation to their electrical discharge capability accordance with
EN 60079-0:2012+A11:2013 Areas with high risk of explosion-Operating material-General requirements.

Target groups:

Device manufacturers required to conform to ATEX product directive 2014/34/EU.
Operators required to conform to ATEX worker protection directive 1999/92/EC.

Notes

Index

0-9	Page
5-axis clamping system compact jaw plate, smooth	1854
5D workpiece stops	215
A	**Page**
Accessories for concentricity gauges	1806
Adapter block aluminium	510
Adapter for collet	311
Adapter plate round	511
Adapter shafts	1866
Adapters for swing clamp	565
Adjustable heel supports for clamp strap assembly	392
Adjustable holder for fixed centres	1840
Adjustable latches heavy-duty version	526
Adjusting knobs with position indicator digital display	1273
Adjustment nuts	987
Adjustment units	1789
Aluminium profiles 16x40 Type I	1089
Aluminium profiles 30x30 light Type I	1085
Aluminium profiles 30x30 Type B	1092
Aluminium profiles 30x60 light Type I	1085
Aluminium profiles 30x60 Type B	1092
Aluminium profiles 40x40 light Type B	1093
Aluminium profiles 40x40 light Type I	1087
Aluminium profiles 40x40 Type I	1089
Aluminium profiles 40x80 light Type B	1093
Aluminium profiles 40x80 light Type I	1087
Aluminium profiles 40x80 Type I	1090
Aluminium profiles 45x45 light Type B	1094
Aluminium profiles 45x45 Type B	1096
Aluminium profiles 45x60 Type B	1096
Aluminium profiles 45x90 light Type B	1094
Aluminium profiles 45x90 Type B	1097
Aluminium profiles 60x60 light Type I	1086
Aluminium profiles 80x80 light Type I	1088
Aluminium profiles 80x80 Type I	1090
Aluminium profiles 90x90 light Type B	1095
Aluminium profiles 90x90 Type B	1097
Aluminium profiles D50 type I, tube	1091
Angle bracket	578
Angle bracket for ball catch	205
Angle bracket for magnetic lock	207
Angle brackets	1611
Angle elements T1 Type I	1113
Angle elements T2 Type I	1114
Angle plates	1188
Angle plates aluminium	89
Angle plates with or without T-slots cast iron	88
Angle profiles 45° grey cast iron	103
Angle profiles 60° grey cast iron	103
Angle sets Type B	1112
Angle sets Type I	1111
Angles	1109
Angular contact ball bearing FAG single-row	1492
Angular hinges with counterbore, long version	1696
Angular hinges with fastening nuts	1693
Angular hinges with fastening nuts, long version	1695
Application equipment	1949
Arness accessories	443
Assembly tools for self-tapping threaded inserts	993
Atlas jack with locknut	155
Axial ball bearing FAG single direction.	1496
Axial joints for tractive forces adjustable	1614-1615
Axial joints similar to DIN 71802	1613
B	**Page**
Ball catch	204
Ball chains	1916
Ball grips revolving	717
Ball handles DIN 6337	733
Ball holders	1843
Ball joints DIN 71802	1608
Ball knobs smooth DIN 319 enhanced	662-663
Ball knobs stainless steel or aluminium DIN 319	661
Ball knobs thermoplastic DIN 319 enhanced	660
Ball lock pins self-locking	325, 363
Ball lock pins self-locking, stainless steel	326
Ball lock pins stainless steel, self-locking	361
Ball lock pins with L-grip, self-locking	330, 364
Ball lock pins with mushroom knob stainless steel, self-locking	362
Ball lock pins with T-grip, self-locking	329, 365
Ball lock pins with zinc L-grip, self-locking	366
Ball lock pins with zinc T-grip, self-locking	367
Ball screw linear actuators rolled, with flange nut DIN 69051 Part 5	1513
Ball screw linear actuators rolled, with screw-in cylinder nut	1514
Ball seats for ball joints DIN 71805	1609
Ball studs DIN 71803 for DIN 71802 angle joints	1610
Ball transfer units heavy duty stainless steel	1900
Ball transfer units heavy duty stainless steel, suitable for outdoor use	1901
Ball transfer units undersprung	1899
Ball transfer units with fastening holes, without housing	1901
Ball transfer units with solid steel housing	1900
Ball transfer units with spring clips	1902
Ball transfer units with steel housing	1897
Ball transfer units with steel housing and plastic ball	1898
Ball transfer units with stud stainless steel	1904
Ball-end locking screw with rotating ball	302
Ball-end thrust screws with head	882-883
Ball-end thrust screws with head stainless steel	884
Ball-end thrust screws without head short version	887
Ball-end thrust screws without head stainless steel with flattened ball	894
Ball-end thrust screws without head stainless steel with flattened ball and rotation lock	895
Ball-end thrust screws without head stainless steel with full ball	893
Ball-end thrust screws without head with flattened ball	890-891
Ball-end thrust screws without head with flattened ball and rotation lock	892
Ball-end thrust screws without head with flattened ball LONG-LOK secured	886
Ball-end thrust screws without head with full ball	888-889
Ball-end thrust screws without head with full ball, LONG-LOK secured	885
Ballistol all-purpose oil in food industry quality	1934
Bar knobs	770
Barrel slide bolts	282
Base plate with flanges grey cast iron	87
Base plate with T-slots grey cast iron	80
Base plates	82, 1188, 1855
Base plates DIN 6348	1055
Base plates steel	81
Beam couplings with radial clamping hub, aluminium	1403
Beam couplings with radial clamping hub, stainless steel	1404
Beam couplings with removable clamping hub, aluminium	1405
Beam couplings with removable clamping hub, stainless steel	1406
Bearing flange for feed roller	1126
Belt tension meter	1308
Bevel gears	1397-1398
Bevel gears in steel, ratio 1:1 toothing milled, straight teeth, engagement angle 20°	1364
Bevel gears in steel, ratio 1:2 toothing milled, straight teeth, engagement angle 20°	1365
Bevel gears in steel, ratio 1:3 toothing milled, straight teeth, engagement angle 20°	1366
Bevel gears in steel, ratio 1:4 toothing milled, straight teeth,	

Index

engagement angle 20°	1367
Bevel gears plastic housing	1396
Block hinges with fastening nuts	1694
Block machined all sides grey cast iron or aluminium	87
Bow shackles	1008
Bullseye level body	1260
Bullseye level body plastic	1261
Bullseye levels in frame, to screw on	1257
Bullseye levels in plastic frame	1258
Bullseye levels in round frame	1259
Bullseye levels with bead-edged frame	1258
Bushes cylindrical	233, 322
Bushes tapered	235, 321
Bushing for ball lock pins	331
Bushing for ball lock pins with LONG-LOK thread lock	332
Butt connector sets automatic Type I	1108
Butt hinges stainless steel	1685
Button head screws EN ISO 7380	936-937
C	**Page**
Cable clips	1128
Cable clips with T-slot key	1129
Cable tie block	1128
Cam action indexing plunger stainless steel, with stop	275
Cam action indexing plunger with stop	272-273
Cam clamp for eccentric clamp modules	1134
Cam clamps adjustable with riser	452
Cam clamps with end lock	411
Cam clamps with middle lock	411
Cam clamps with riser	448
Cam levers adjustable external thread, stainless steel	406
Cam levers adjustable external thread, stainless steel, thrust washer stainless steel	407
Cam levers adjustable external thread, steel or stainless steel	404
Cam levers adjustable steel, with external thread	405
Cam levers adjustable with plastic handle external thread, steel or stainless steel	408
Cam levers double	410
Cam levers internal and external thread, stainless steel	398-399
Cam levers internal and external thread, steel or stainless steel	394-395
Cam levers internal or external thread, stainless steel, thrust washer stainless steel	400
Cam levers single	410
Cam levers steel with internal and external thread	396
Cam levers with plastic handle internal and external thread, steel or stainless steel	402-403
Cam screws with hexagon washer	446
Cam screws with hexagon washer, for T-slots	447
Cam screws with knife edge washer	446
Cam-action indexing plungers	271, 280
Cam-action indexing plungers stainless steel	274, 281, 326
Caps for filler necks	1729
Capstan wheel	651
Cardan shafts telescopic	1461
Carriages	1219
Carriages compact	1221
Carriages compact, short	1222
Carriages DryLin® T	1192
Carriages DryLin® W	1200
Carriages with flange	1220
Carrier keys DIN 2079	343
Central screws Type B	1107
Centre jaws	1862
Centre sleeves spring mounted with retraction cam	1839
Centring bushes	294
Centring clamps	310
Centring clamps round	308-309
Centring clamps with ball or hexagon segments	298-301
Centring pins for aligning hole	286-287
Centring pins for central hole	286
Centring rings	346, 1174
Centring V	303
Centring V-plate	320
Ceramic ball bearings Si3N4	1491
Ceramic ball bearings ZrO2	1490
Chock clamps	451
Circlips E-type DIN 6799	967
Circlips for ball seats DIN 71805	1612
Circlips for bores DIN 472	966
Circlips for shafts DIN 471	964-965
Circular plates grey cast iron or aluminium	96
Circular plates steel	96
Clamp hubs	720
Clamp nuts	487
Clamp nuts with star or T-grip	488
Clamp plates for toothed belts profile T and AT	1296
Clamp springs	387
Clamp stops adjustable for slot profiles	211
Clamp strap assemblies	386, 390-391
Clamp strap assemblies goose-neck	387
Clamp strap modules compact	388
Clamp straps Clamping devices	369
Clamp straps assorted, long slot	377
Clamp straps DIN 6314 straight, steel or aluminium	373
Clamp straps double sided	384
Clamp straps double-sided, 90° swivelling	385
Clamp straps gooseneck DIN 6316 wide, steel or aluminium	376
Clamp straps gooseneck narrow, steel	375
Clamp straps hinge heel	383
Clamp straps hinge heel with bolt slot	393
Clamp straps mini double sided	383
Clamp straps open U DIN 6315 C, round pin, steel or aluminium	382
Clamp straps open U DIN 6315, steel or aluminium	378
Clamp straps open U flat pin, steel or aluminium	379
Clamp straps open-U with pin and protective insert	380
Clamp straps pivot steel	393
Clamp straps pivot strap only or assembly	381
Clamp straps slotted heel	370
Clamp straps stepped-heel, steel or aluminium	372
Clamp straps swivel-heel	371
Clamp straps tapped-heel	371
Clamp straps with flattened ball	374
Clamping angles Type I	1115
Clamping arm for swing clamp	565
Clamping bolts	429
Clamping claw sets	1869
Clamping component set	1846
Clamping element “actima”	436-437
Clamping element “arness”	442-443
Clamping force intensifiers	973
Clamping jaws for floating clamps	440
Clamping joints	784, 1800
Clamping joints individually adjustable	785
Clamping levers	733
Clamping levers antistatic external thread, plastic grip	779
Clamping levers antistatic internal thread, plastic grip	774
Clamping levers external thread	734, 738, 752
Clamping levers external thread, stainless steel	739
Clamping levers external thread, steel	741
Clamping levers external thread, steel parts stainless steel	735, 754
Clamping levers flat external thread	750
Clamping levers flat external thread, steel parts stainless steel	751
Clamping levers flat internal thread	742
Clamping levers flat internal thread, steel parts stainless steel	743

Index

Clamping levers internal thread	731, 744
Clamping levers internal thread, stainless steel	737
Clamping levers internal thread, steel	736, 740
Clamping levers internal thread, steel parts stainless steel	732, 746
Clamping levers with external thread, stainless steel	756
Clamping levers with internal thread, stainless steel	748
Clamping levers with plastic handle external thread	777
Clamping levers with plastic handle external thread, metal parts stainless steel	780
Clamping levers with plastic handle internal thread	772
Clamping levers with plastic handle internal thread, metal parts stainless steel	775
Clamping levers with protective cap external thread	753
Clamping levers with protective cap internal thread	745
Clamping levers with protective cap internal thread, steel parts stainless steel	747
Clamping levers with protective cap with external thread, metal parts stainless steel	755
Clamping levers with protective cap with external thread, stainless steel	757
Clamping levers with protective cap with internal thread, stainless steel	749
Clamping levers with push button external thread, metal parts stainless steel	781
Clamping levers with push button internal thread	773
Clamping levers with push button internal thread, metal parts stainless steel	776
Clamping levers with push button with external thread	778
Clamping levers with thrust pad	782-783
Clamping pins	430
Clamping pins (high force)	430
Clamping screws	431
Clamping screws (high force)	431-432
Clevis joints DIN 71752	1596
Clevis joints for rod ends	1590
Clevis joints for rod ends stainless steel	1591
Clevis joints stainless steel DIN 71752	1595
Clevis joints with snap-in pin DIN 71752	1593
Clevis with external thread	988
Collet for external clamping	312-313
Collet for internal clamping	314-315
Column bases double	1787
Column bases single	1786
Column clamps double	1788
Column shaft collars	1790
Columns for spring fingers	1848
Compact clamps	482
Compression latches	546
Compression latches with adjustable tongue height	547
Compression springs ISO 10243, heavy load	1552-1553
Compression springs ISO 10243, light load	1548-1549
Compression springs ISO 10243, moderate load	1550-1551
Compression springs ISO 10243, very heavy load	1554-1555
Concentricity gauges Dial gauges	1801
Concentricity gauges max. Ø 35 mm	1804
Concentricity gauges max. Ø 80 mm	1805
Conical grip revolving	703
Conical grips revolving	705
Conical knobs	664
Conical spring washers DIN 6796	957
Connecting links grade 10	1030
Connecting sets automatic Type B	1104
Connecting sets automatic Type I	1103
Connecting sets central Type B	1101-1102
Connecting sets central Type I	1100
Connecting sets standard Type I	1098
Connecting sets universal Type I	1099
Connectors with screw fitting	1179
Coolant hose LOC-LINE® Flexi	1908-1911
Couplings for cross-clamping	1867
Cover and adapter profiles Type B and Type I	1121
Cover profiles Type I	1122
Crank handles aluminium	762
Crank handles aluminium cylindrical revolving grip	766
Crank handles aluminium with fold-away cylinder grip	767
Crank handles aluminium with safety cylinder grip	768
Crank handles balanced	770
Crank handles offset similar to DIN 468	760
Crank handles stainless steel cylindrical revolving grip	769
Crank handles straight similar to DIN 469	761
Crank handles with fold-away grip	763
Crank handles with revolving grip	764
Crank handles with safety grip	765
Cross tables long	1178
Cross tables long with position indicators	1179
Cross tables short	1176
Cross tables short with position indicators	1177
Cube connector sets Type B	1106
Cup elements type H2	1624
C-washers captive DIN 6371	976
C-washers DIN 6372 enhanced	972
Cylinder clamping sets	1865
Cylinder cleaners	1925
Cylinder cleaners two-part	1925
Cylinder roller bearing FAG with cage	1494
Cylindrical grips fold-down	709, 711
Cylindrical grips revolving	708, 710
Cylindrical grips revolving stainless steel	705
Cylindrical grips revolving with hexagon socket	708
Cylindrical grips safety automatic return	712
Cylindrical pins DIN 6325	345
Cylindrical pins with internal thread DIN 7979	345
Cylindrical pins with internal thread DIN 7979	304
D	**Page**
Deep groove ball bearing FAG single row	1356-1358
Deep groove ball bearing FAG single row	1486-1488
Deep groove ball bearings stainless steel, DIN 626	1489
Deflection dial gauge holders 180° probe lever with hole	1829
Deflection dial gauge holders 180° probe lever with thread	1830
Deflection dial gauge holders 90°	1828
Deflection dial gauge holders 90° probe lever with hole	1829
Deflection dial gauge holders 90° probe lever with thread	1828, 1830
Dial gauge arms	1797
Dial gauge collets for Ø8 shafts	1812
Dial gauge holders	1798
Dial gauge holders for measuring frame	1815
Dial gauge holders long version with thread	1814
Dial gauge holders short version with smooth shaft	1814
Dial gauge holders short version with thread	1813
Dial gauge holders sliding	1813
Dial gauge holders with fine adjustment	1798
Dial gauges digital	1810
Dial gauges DIN 878	1809
Dipsticks	1736
Disc grips for hexagon socket screws	619
Disc handwheels stainless steel with revolving grip	688
Disc springs DIN EN 16983	970
Door latch	412
Double ball catch	203
Dovetail slides	1141
Dovetail slides with end plates	1142
Dovetail slides with micrometer spindle	1138-1139, 1143
Dovetail slides with micrometer spindle and handwheel	1144

Index

Down-thrust clamps	481
Drill bush clamps DIN 173-1	1066
Drill bush holder plates for drilling jig for cylindrical parts	1060
Drill bushes cylindrical DIN 179	1062
Drill bushes push-in DIN 173	1064
Drill bushes push-in DIN 173-1	1065
Drill bushes with collar DIN 172	1063
Drilling jigs Drill bushes Jig elements	1043
Drilling jigs for cylindrical parts	1058
Drilling jigs size 0 to 3 S DIN 6348 enhanced	1052
Drilling jigs size 3 to 5 DIN 6348	1053
Drilling plates	1044
Drilling plates DIN 6348 enhanced	1054
Drilling plates with long hinge block	1049
Drilling plates with short hinge block	1048
Drive technology	1277
D-shackles	1009
Ducks feet	1651
Dust caps	551

E	Page
Earthing terminal type I	1131
Eccentric clamp modules	1132-1134
Eccentric stops	210
Eccentric supports	168
Elastic slot keys Pat. No. 4200676	339
Elastomer buffers Shore 70A	1556
Elastomer buffers Shore 80A	1557
Elastomer buffers Shore 90A	1558
Elastomer dog couplings clamping with grub screw	1409
Elastomer dog couplings with conical hub and clamping ring (similar to DIN 69002)	1407
Elastomer dog couplings with radial clamping hub	1408
Elevating castors with foot with bolt hole or mounting plate	1894
Elevating castors with integrated machine foot	1895
Emergency openers	563
End caps Type B and Type I	1120
End seals double-lip sealing rings	1242
Extension columns long	1056
Extension columns short	1056
Extension for probe inserts	1819
Extension nuts height 3xD	949
Extension pieces	136
Extension shafts	1866
Extensions for probe inserts	1823
Extractor	347
Eye bolts DIN 444, Form B	939

F	Page
Face pin spanner adjustable, cranked	1927
Fastening screws for cross table mounting	1140
Fastening sets for straps und angles	1110
Feeler gauge strips	1915
Feet with threaded pin, DIN 6320 (Edition 1971)	136
Filler necks	1737-1739
Five lobe grips	665, 804-805
Fixed bearing units	1516
Fixed bearing units block version	1518
Fixed bearing units flange version	1520
Fixed centres	1840
Fixture clamps machinable	444
Fixture clamps unequal hexagon	444
Fixture feet with external thread	142
Fixture feet with internal thread	143
Flat clamps	477
Flat guides DryLin® N	1199
Flip-Flop hoist rings	1016
Floating bearing units	1517
Floating bearing units block version	1519
Floating bearing units flange version	1521
Floating clamp	438
Floating clamp with separate workpiece clamp and interlock	439
Foot plates Type B and Type I	1124-1125
Four-spoked nuts	650

G	Page
Gas springs	1582-1583
Gas springs, stainless steel	1584-1585
Gauge holders articulated arm with central hydraulic lock	1795
Gauge stands magnetic	1796
Gear racks in steel toothing milled, straight teeth, engagement angle 20°	1362-1363
Grease nipple caps for conical grease nipples	1938
Grease nipples button head DIN 3404	1940
Grease nipples conical head DIN 71412	1936-1937
Grease nipples flush type, DIN 3405	1939
Grip module parallel grippers	1166-1167
Grip nuts	799
Grip screws	800
Gripper pads round carbide	896
Gripper pads square carbide	903
Grippers adjustable	904
Grippers and inserts round	898-899
Grippers and inserts round with counterbore	900
Grippers hexagonal	901
Grippers square	902
Grub screw with hexagon socket and pointed end DIN 914 / DIN EN ISO 4027	929
Grub screws DIN 551	988
Grub screws with ball thrust point	908
Grub screws with flat point hexagon socket DIN 913	928
Grub screws with thrust point DIN 6332	908
Guide bushes bronze, maintenance-free	1470
Guide bushes DIN 9834 / ISO 9448, bronze, maintenance-free with collar	1471
Guide rails DryLin® T	1193
Guide rails DryLin® W double	1203
Guide rails DryLin® W single	1202
Guide rails with cross rollers	1149
Guide rollers	1890

H	Page
Hammer-head screws	765
Hammer inserts for Supercraft hammers	1922
Hammer-head screws	881
Handle for drilling jigs	1049
Handles	719
Handles screw-in	718
Handles screw-in with torque limit	718
Handwheel washers	971
Handwheels	669, 803
Handwheels 2-spoke aluminium, flat wheel rim	690-691
Handwheels 2-spoke flat rim, aluminium	692-693
Handwheels 2-spoke plastic	666
Handwheels 2-spoke plastic, with folding grip	668
Handwheels 2-spoke plastic, with revolving grip	667
Handwheels DIN 950, aluminium	680-681
Handwheels DIN 950, grey cast iron	678-679
Handwheels DIN 950, stainless steel	682
Handwheels disc aluminium	684-687
Handwheels disc similar to DIN 950, aluminium	694
Handwheels disc with revolving grip	695
Handwheels disc without grip	696
Handwheels for position indicators	1275
Handwheels with fold-away grip	671
Handwheels with revolving grip	670
Handwheels with safety grip	672-673

Index

HeliCoil®plus threaded inserts	990
Hexagon domed cap nuts similar to DIN 1587	956
Hexagon head bolts DIN 931/DIN EN ISO 4014/DIN EN 24014	930-931
Hexagon head bolts DIN 933	932-933
Hexagon head bolts with flange EN 1665	934
Hexagon head bolts with serrated flange	935
Hexagon nut with serrated flange	947
Hexagon nuts DIN 934/DIN EN ISO 4032/DIN EN 24032	942
Hexagon nuts height 1.5xD, DIN 6330 enhanced	954
Hexagon nuts thin type DIN 439	943
Hexagon nuts with collar height 1.5xD, DIN 6331 enhanced	952
Hexagon nuts with flange	949
Hexagon nuts with flange EN 1661	948
Hexagon nuts with no-loss washer	953
Hexagon nuts with polyamide thread lock high type, DIN 982	944
Hexagon nuts with polyamide thread lock thin type, DIN 985	945
Hexagon nuts with spherical seat	955
Hexagon nuts with thread lock DIN 980	946
High pressure nozzles LOC-LINE®	1914
Hinge blocks long	1044
Hinge blocks short	1045
Hinge pins	409
Hinge plates	1592
Hinges aluminium	1675
Hinges aluminium, lift-off, left	1672
Hinges aluminium, lift-off, right	1673
Hinges aluminium, with adjustable friction	1666-1667
Hinges aluminium, with detent	1668-1669
Hinges die-cast zinc, with elongated holes	1670
Hinges die-cast zinc, with locking lever	1671
Hinges lift-off stainless steel	1674, 1678
Hinges plastic	1659
Hinges plastic with bushes	1686
Hinges plastic with bushes and fastening screws	1688
Hinges plastic with fastening holes	1662
Hinges plastic with fastening screws	1687
Hinges plastic, detent	1664
Hinges plastic, lift-off, left	1657
Hinges plastic, lift-off, right	1658
Hinges plastic, lift-off, with guide tabs	1663
Hinges plastic, with adjustable friction	1665
Hinges plastic, with elongated holes	1661
Hinges plastic, with locking lever	1660
Hinges plate, steel or stainless steel	1684
Hinges stainless steel	1676-1677, 1679-1680, 1682
Hinges steel, maintenance-free	1697
Hinges weldable	1689, 1692
Hinges weldable, stainless steel	1690
Hoist rings	1012, 1015, 1017
Hoist rings 360° rotation grade 10	1011
Hoist rings with Envirolox® coating	1013
Hollow shaft sensors with magnetic scanning	1255
Hook clamp holders	426
Hook clamp with long clamp strap	418
Hook clamps	417
Hook clamps ground Form A/B/C	423
Hook clamps precision	428
Hook clamps with collar	420, 424
Hook clamps with collar and cam lever	421-422
Hook clamps with mounting bracket	425
Hook clamps with protective insert	419
Hook wrench with lug DIN 1810A enhanced	1926
Housings for flange nuts	1515
H-profiles grey cast iron or aluminium	99
I	**Page**
ildler sprockets with ball bearing	1350
igubal® pillow block bearings	1469
Index drilling discs for drilling jig for cylindrical parts	1059
Indexing plunger with five lobe grip	324
Indexing plunger with lock	238
Indexing plunger, pneumatic	260
Indexing plungers - Precision with cylindrical pin	322
Indexing plungers - Precision with tapered pin	321
Indexing plungers - Premium with cylindrical pin	232
Indexing plungers - Premium with tapered pin	234
Indexing plungers ECO	237
Indexing plungers ECO short version	246
Indexing plungers for thin-walled parts	231
Indexing plungers short version	224-227
Indexing plungers short version, with thread lock	228-229
Indexing plungers stainless steel	230
Indexing plungers stainless steel without collar	256-257
Indexing plungers with extended indexing pin	222-223
Indexing plungers with locked mark	242
Indexing plungers with T-grip	244-245
Indexing plungers with thread lock	220-221
Indexing plungers without collar	252-253, 258-259, 262-270
Indexing plungers without collar, extended indexing pin	254-255
Inductive proximity switches rectangular housing	1176
Inductive proximity switches round housing	1175
Inductive proximity switches threaded housing	1177
Industrial shock absorbers adjustable	1586
In-line hinges stainless steel lift-off, screw-on	1691
Insert bearing B	1532
Insert bearing MUC stainless steel	1540
Insert bearing UC	1531
Inserts	166
Inspection blocks with column	1794
Inspection tables	1794
Intermediate plates	1271
J	**Page**
Jack screws	151, 166
Jack screws extended	167
Jaw pins	1864
Jaw plates machinable	1858
Jaw plates smooth	1857
Jaw plates smooth for centre jaws	1863
Jaw plates smooth for pendulum jaws	1860
Jaw plates with pins	1857
Jaw plates with pins for centre jaws	1863
Jaw plates with pins for pendulum jaws	1861
Joint angles Type I	1116
Joint blocks	1799-1800
Joints Type B and Type I	1118-1119
K	**Page**
Key rings	334
Keyless locking couplings Form A for thin walled hubs	1420-1421
Keyless locking couplings Form A stainless steel	1422
Keyless locking couplings Form B	1424-1425
Keyless locking couplings Form C with axial ring	1426-1427
Keyless locking couplings Form D compact design	1428-1429
Keyless locking couplings Form E short version	1432-1433
Keyless locking couplings Form F short version with axial ring	1434-1435
Keyless locking couplings Form G increased tolerance range	1436-1437
Keyless locking couplings Form G stainless steel	1438
Keyless locking couplings Form H for high torques	1440-1441
Keyless locking couplings with central nut	1442-1443
Keyless locking couplings, Form D stainless steel	1430
Keys for quarter-turn locks	552
Klüber “Quietsch-Ex”	1930
Klüber bonded coating UNIMOLY C 220	1933
Klüber copper paste lead-free	1931

Index

Klüber liquid chain grease	1932
Klüber lubricating paste	1930
Klüber molybdenum disulphide lubricant	1932-1933
Klüber safety lubricating grease	1931
Knobs flat	652
Knurled heads for hexagon socket screws	618
Knurled knobs aluminium	611
Knurled knobs antistatic	609
Knurled knobs for screws with hex head	617
Knurled knobs metal parts stainless steel	676
Knurled knobs with arrow	614
Knurled knobs with grip	677
Knurled nuts	606
Knurled nuts flat steel and stainless steel, DIN 467	615
Knurled nuts high steel and stainless steel, DIN 466	615
Knurled nuts plastic	605
Knurled nuts quick-acting	605
Knurled nuts steel and stainless steel, DIN 6303	604
Knurled screws	616
Knurled screws high form steel and stainless steel, DIN 464	607
Knurled screws low head steel and stainless steel, DIN 653	606
Knurled thumb screws plastic	607
Knurled torque knobs	912

L	Page
LL profile with reinforcing ribs grey cast iron	98
Latch	1046
Latch stainless steel DIN 3133	520
Latches adjustable	525
Latches adjustable with swing bail	524
Latches with draw bail	521-522
Latches with release stainless steel	523
Latches with spring clip	519
Lateral spring plungers	348-349, 357
Lateral spring plungers with threaded sleeve	352-353
Lateral spring plungers with threaded sleeve, without thrust pin	354
Lateral spring plungers without thrust pin	351
Ledge handles	851
Ledge handles stainless steel	850
Levelling feet	1655
Levelling feet ECO threaded spindles steel or stainless steel	1650
Levelling feet for aluminium profiles	1654
Levelling feet plates die-cast zinc or stainless steel	1644-1645
Levelling feet plates ECO die-cast zinc, stainless steel or plastic	1649
Levelling feet plates extended die-cast zinc	1646
Levelling feet plates plastic	1641
Levelling feet plates plastic, heavy-duty version	1642
Levelling feet threaded spindles steel or stainless steel	1647
Levelling sets high version	1616
Levelling sets low version	1618
Levelling sets low version with locknut	1619
Levelling sets spherical washer	1620, 1622
Levelling sets spherical washer with locknut	1621, 1623
Levelling sets with locknut	1617
Levers 20° DIN 99	713
Lift tables	1182
Lifting bolts with ring lock	1025
Lifting pins self-locking	1019
Lifting pins self-locking, stainless steel	1020, 1023
Lifting rings	1013
Lifting units pneumatic with rail guide	1152-1153
Lifting units pneumatic with round guides	1154-1157, 1159
Line laser	1309
Linear actuator connector clamps base	1781
Linear actuator connector clamps cross	1778-1779
Linear actuator connector clamps flange	1780
Linear actuators	1777
Linear ball bearing with internal race	1210-1211
Linear ball bearings self-aligning	1230
Linear ball bearings self-aligning, high load rating	1231
Linear ball bearings stainless steel	1229
Linear ball bearings with flange	1232
Linear ball bearings with flange, double bearing	1233
Linear ball bearings with plastic cage	1227
Linear ball bearings with steel cage	1228
Linear gantry module with rail guides	1170-1171
Linear gantry module with round guides	1172-1173
Linear housing units quadro, closed	1240
Linear housing units quadro, open	1241
Linear housing units single, closed	1236
Linear housing units single, open	1237
Linear housing units tandem, closed	1238
Linear housing units tandem, open	1239
Linear housing units with flange	1234
Linear housing units with flange, tandem	1235
Linear modules pneumatic with rail guide	1144-1149
Linear modules pneumatic with three round guides	1140-1141
Linear modules pneumatic with two round guides	1138-1139
Linear plain bearings	1226
Linear scales self adhesive or with screw holes, aluminium	1263
Linear scales self-adhesive or with screw holes, aluminium	1264
Linear scales self-adhesive, stainless steel	1262
Links DIN ISO 606	1312-1313
Links stainless steel DIN ISO 606	1314
Locating bushes for ball lifting pins stainless steel, flat	1022
Locating bushes for locating pins	131
Locating bushes for pneumatic locating cylinder	305
Locating cylinder Ball Lock	292
Locating cylinders pneumatic	304
Locating cylinders with quick clamping system	293
Locating feet	148
Locating pins and rest pads DIN 6321 (Issue 1973)	129
Locating pins expanding	290
Locating pins removable Form A and C	283
Locating pins removable Form B and D	283
Locating pins with ball-end Form A	284
Locating pins with ball-end Form B	285
Locating pins with flattened ball-end Form C	284
Locating pins with flattened ball-end Form D	285
Locating pins with internal thread	130
Locators	198
Lock grips	716
Lock washer self-locking DIN 25201	960
Locking pins	327
Locking pins with axial locking	360
Locking pins with folding latch	359
Locking pins with key ring	328
LOCTITE activators	1949
LOCTITE adhesive and sealant	1946
LOCTITE cleaner	1948
LOCTITE flange sealant	1945
LOCTITE liquid epoxy metals	1941
LOCTITE retaining compound	1947
LOCTITE thread sealant	1944
LOCTITE threadlocker	1942
LOCTITE universal adhesive	1943
Low-profile clamps	454
L-profiles grey cast iron or aluminium	97
L-profiles unequal grey cast iron or aluminium	98
L-profile with reinforcing ribs grey cast iron	96

M	Page
Machinable collets, square	306-307
Machine feet	1625

Index

Machine feet with vibration absorption	1637
Machine handles fixed aluminium, DIN 39 Form E	698
Machine handles fixed steel, DIN 39 Form E	697
Machine handles fixed steel, similar to DIN 39	697
Machine handles fixed straight form, similar to DIN 39	701
Machine handles revolving	702
Machine handles revolving aluminium, similar to DIN 98 Form E	699
Machine handles revolving similar to DIN 98 Form E, stainless steel	700
Machine handles revolving similar to DIN 98 Form E, steel	699
Machine handles revolving steel, similar to DIN 98	701
Machine handles revolving straight form, similar to DIN 98	702
Machine handles, fixed, DIN 39 Form E, stainless steel	698
Magnetic base permanent	1081
Magnetic C profiles	1919
Magnetic envelopes	1920
Magnetic envelopes with strong magnetics	1920
Magnetic labels	1918
Magnetic labels on a roll, perforated	1918
Magnetic lock	206
Magnetic Pickup	1081
Magnetic sensors passive sensors, miniature design	1253
Magnetic stands	1796-1797
Magnetic tape rolls	1919
Magnetic tape scale with incremental coding, 5 mm pole length	1254
Magnets	1067
Magnets button	1077
Magnets deep pot	1076
Magnets deep pot AlNiCo with fitting tolerance	1070
Magnets deep pot AlNiCo without fitting tolerance	1070
Magnets deep pot SmCo	1073
Magnets deep pot with internal thread NdFeB	1073
Magnets deep pot with pin AlNiCo	1071
Magnets shallow pot	1077
Magnets shallow pot hard ferrite	1071
Magnets shallow pot NdFeB	1074
Magnets shallow pot SmCo	1072
Magnets shallow pot with counterbore hard ferrite	1075
Magnets shallow pot with countersink hard ferrite	1075
Magnets shallow pot with internal thread NdFeB	1076
Magnets shallow pot with internal thread NdFeB, with rubber protective jacket	1079
Magnets shallow pot with tapped pin NdFeB, with rubber protective jacket	1079
Magnets shallow pot with thread hard ferrite	1072
Magnets shallow pot with threaded pin NdFeB, with rubber protective jacket	1080
Magnets shallow pot with through hole NdFeB, with rubber protective jacket	1080
Magnets strong	1078
Mandrel collets	296
Mandrel collets with side lock	297
Manual clamp vertical with hole pattern on the front	574-575
Material handling and transport	1871
Measuring arms	1837
Measuring element for gear wheels	1842
Measuring fixtures	1835-1836
Metal bellows couplings clamping with grub screw	1402
Metal bellows couplings with radial clamping hub	1401
Mini ball transfer units	1903
Mini clamp for horizontal installation	572-573
Mini clamp manual operated	570-571
Mini clamps	568-569
Miniature ball screw linear actuators ground, with flange nut	1522-1523
Miniature ball screw linear actuators ground, with screw-in cylinder nut	1524-1525
Miniature carriages stainless steel	1224
Miniature linear guides DryLin® T	1194-1195
Miniature profile guide rails stainless steel	1225
Miniature slide guides DryLin® N	1196-1198
Monitor brackets	1784-1785
Mounting brackets	1272
Mounting brackets aluminium	278-279
Mounting brackets steel	276
Mounting flange	1587
Mounting plates horizontal	1167
Mounting plates vertical	1168-1169
Mounting screws for idler sprockets	1351
Multiple connectors	786
Mushroom knobs antistatic external thread	657
Mushroom knobs antistatic internal thread	655
Mushroom knobs external thread	656
Mushroom knobs internal thread	654
Mushroom knobs with internal thread	653
N	**Page**
Net mats	1921
Net sleeves	1921
Nuts for T-slots blanks	874
Nuts for T-slots DIN 508 enhanced	873
Nuts for T-slots long	874
Nuts for T-slots rhombic form	879
O	**Page**
Offset bushes and assembly tool for lateral spring plungers.	350
Oil level gauge long version	1714
Oil level gauges	1712-1713
Oil level sight glasses	1715
Oil level sight glasses aluminium	1717
Oil level sight glasses aluminium, glass window	1717
Oil level sight glasses domed	1716
Oil level sight glasses press-in	1716
Oldham-type couplings clamping with grub screw	1411
Oldham-type couplings with radial clamping hub	1410
Opening grips	551
Operating parts	603
O-rings	1497-1502
O-shaped mounts	1575
P	**Page**
Palm grips aluminium, similar to DIN 6335	622-623
Palm grips grey cast iron DIN 6335	626
Palm grips plastic coated grey cast iron, DIN 6335	627
Palm grips quick-acting grey cast iron	630
Palm grips similar to DIN 6335	628
Palm grips similar to DIN 6335 metal parts stainless-steel	629
Palm grips stainless steel, similar to DIN 6335	624-625
Palm grips with threaded spindle	627
Parallel block sets	337
Parallel blocks pair DIN 6346	336
Parallel keys DIN 6885 A	341
Pendulum jaws	1859
Permanent workholding magnets with fine pole division	1068
Pillow block bearing flange type	1537, 1542
Pillow block bearing flange type 2-hole	1539, 1543
Pillow block bearing flange type MUCF 2-hole stainless steel	1538
Pillow block bearing flange type MUCF stainless steel	1536
Pillow block bearing flange type UCF	1527
Pillow block bearing flange type UCFC with centring hub	1528
Pillow block bearing flange type UCFL 2-hole	1529
Pillow block bearing pedestal type	1534-1535, 1541
Pillow block bearing pedestal type BPP	1530
Pillow block bearing pedestal type MUCP stainless steel	1533
Pillow block bearing pedestal type UCP	1526
Pin connector sets Type B	1105
Pivot heads swivel angle 30°	1187
Pivoting columns	1833

Index

Pivoting systems	1834
Plain bearing sintered bronze cylindrical	1482-1483
Plain bearing sintered bronze with collar	1484-1485
Plain bearings cylindrical	1478-1479
Plain bearings plastic	1474-1475
Plain bearings with collar	1480
Plastic grips	504, 518, 578
Plates grey cast iron or aluminium	83
Plug connectors self-assembly with screw fitting	1180
Plug connectors with screw fitting	1178
Plugs fill only knurled cap	1728
Pneumatic clamp	512-513
Pneumatic clamps push-rod	514
Pneumatic clamps vertical heavy-duty version	515
Pneumatic clamps vertical with vertical mounted cylinder	516
Position indicator quasi-absolute, mains-independent, indicator accuracy 10 µm	1252
Position indicator quasi-absolute, mains-independent, indicator accuracy 10 µm, small design	1251
Position indicators	1265-1267
Position indicators for handwheels analogue-digital display	1274
Position indicators freely programmable	1268-1270
Positioning brackets	337
Positioning bushes for indexing plunger	277
Positioning feet	138-141
Positioning pins cylindrical ground	288
Positioning pins cylindrical not ground	288
Positioning pins free-milled ground	289
Positioning pins free-milled not ground	289
Positioning tables long	1174
Positioning tables long with coaxial electric drive	1156-1157
Positioning tables long with lateral electric drive	1158-1159
Positioning tables long with position indicator	1175
Positioning tables rotary with coaxial electric drive	1160-1161
Positioning tables short	1172
Positioning tables short with coaxial electric drive	1152-1153
Positioning tables short with lateral electric drive	1154-1155
Positioning tables short with position indicator	1173
Potential equaliser type I	1131
Power clamp	484
Precision guide shafts	1250
Precision guide shafts with fastening holes	1249
Precision slides roller mounted	1145
Precision slides roller mounted with end plates	1147
Precision slides roller mounted with micrometer spindle	1148
Precision vice	1844-1845
Press-in plugs	1723
Press-in plugs with dipstick	1733
Prism attachments	1831
Probe insert set 11-piece	1823
Probe inserts carbide thread M2.5	1825
Probe inserts hardened steel thread M2.5	1824
Probe inserts knife point	1821
Probe inserts with ball point	1820
Probe inserts with domed face	1822
Probe inserts with domed point	1820
Probe inserts with enlarged flat face	1822
Probe inserts with flat face	1821
Probe knife point	1818
Probe knife point offset	1818
Probe knife point offset, for fixed stop	1819
Probe with flat face	1816
Probe with flat point	1816
Probe with reduced domed point	1817
Probe with reduced flat face	1817
Profile damper axial damping, soft version	1577
Profile damper radial damping	1578
Profile damper radial damping, hard version	1579
Profile dampers axial damping	1576
Profile guide rails	1223
Protection frames for dial gauges	1826
Protective caps	506
Protective rubber caps for shallow pot magnets	1078
Protective rubber sleeves for universal and cardan joints (double)	1462
Protective rubber sleeves for universal and cardan joints (single)	1462
Pull clamps	433
Pull clamps (high force)	434
Pull handles angled	829, 840, 847, 863
Pull handles antistatic	811
Pull handles arch	813-815
Pull handles fold-down	839
Pull handles high temperature resistant	810, 820
Pull handles high-gloss chromed	834
Pull handles oblique	815
Pull handles open-ended screw on	854
Pull handles oval	822, 824-825
Pull handles oval detachable	826-827
Pull handles round	821, 823
Pull handles stainless steel	817, 828-829, 835
Pull handles tubular	830-831, 841-845
Pull handles tubular adjustable	849
Pull handles tubular angled	840
Pull handles tubular oblique	832
Pull handles tubular stainless steel	846
Pull handles with soft inner face	816
Push-pull clamps heavy-duty version with handle	577
Push-Pull spring plungers	355
Push-Pull spring plungers with rotation lock	356
Q	**Page**
Quarter-turn lock, stainless steel	528
Quarter-turn locks	532
Quarter-turn locks compact	527
Quarter-turn locks compact lockable	530
Quarter-turn locks compact with wing grip	529
Quarter-turn locks for sterile areas	560
Quarter-turn locks free-turning	549
Quarter-turn locks lockable, stainless steel	537
Quarter-turn locks long version	540-541
Quarter-turn locks polyamide	539
Quarter-turn locks stainless steel	553
Quarter-turn locks stainless steel with L-grip	558-559
Quarter-turn locks stainless steel with T-grip	543, 556-557
Quarter-turn locks stainless steel with wing grip	555
Quarter-turn locks stainless steel, lockable	554
Quarter-turn locks stainless steel, small version	533, 536
Quarter-turn locks with cam tongue	548
Quarter-turn locks with L-grip	545
Quarter-turn locks with T-grip	544
Quarter-turn locks with wing grip	542
Quarter-turn locks, stainless steel long version	534-535
Quarter-turn screws	983
Quarter-turn security locks, stainless steel	550
Quick-fit couplings with angular and radial offset compensation	1468
Quick-fit couplings with radial offset compensation	1464-1465
Quick-fit couplings with radial offset compensation and mounting flange	1466-1467
Quick-fit couplings with radial offset compensation and mounting flange	1340-1341
R	**Page**
Ratchet levers	758-759
R-clips DIN 11024	969
Receiver bush stainless steel, for lifting pins	1024
Receiver bushes for ball lifting pins, stainless steel	1021

Index

Receiver bushes Form A (pressed in from rear)	295
Receiver bushes Form B (screwed down from front)	295
Recessed grips clip-in	860
Recessed handles	855, 859
Recessed handles fold-down	856, 858
Recessed handles fold-down stainless steel	861
Recessed handles fold-down, stainless steel	857
Recessed handles, fold down DIN 3136	862
Rectangular hollow profiles grey cast iron	102
Rectangular plates precision steel	82
Rectangular support elements	164
Reducer sleeves	1256
Reducer sleeves round	1773
Reducer sleeves square	1773
Reducing bushings	1271
Repair kit	1000
Rest pads adjustable with locknut	149
Rest pads pin form, external thread	133
Rest pads pin form, internal thread	132
Rest pads with positioning pin	135
Retaining cables	335
Retaining clips, DIN 9832	1472
Rigid couplings one-piece	1412
Rigid couplings two-piece	1413
Ring bolts DIN 580 / stainless steel similar to DIN 580	1004
Ring bolts rotatable high-strength grade 10	1006
Ring bolts similar to DIN 580	1004
Ring bolts swivel and 360° rotatable, grade 8	1007
Ring nuts DIN 582 stainless steel similar to DIN 582	1005
Ring nuts similar to DIN 582	1005
Riser bars	427
Riser blocks with draw bolt	483
Riser stops	453
Risers for power clamp	485
Rod ends igubal® with plain bearing external thread	1600
Rod ends igubal® with plain bearing internal thread	1602
Rod ends with ball bearing external thread	1597
Rod ends with ball bearing internal thread	1598
Rod ends with plain bearing external thread	1599
Rod ends with plain bearing external thread, narrow version	1605
Rod ends with plain bearing external thread, stainless steel	1603
Rod ends with plain bearing internal thread	1601
Rod ends with plain bearing internal thread, narrow version	1606
Rod ends with plain bearing internal thread, stainless steel	1604
Rod-end eyes	1592
Rods stainless steel	1791
Roll dowel heavy duty ISO 8752	344
Roller cages for guide rails	1150
Roller carriages aluminium	1207
Roller carriages compact and heavy-duty version	1204
Roller carriages steel	1206
Roller chains single DIN ISO 606, curved link plate	1312
Roller chains single DIN ISO 606, straight link plate	1313
Roller chains single stainless steel DIN ISO 606, curved link plate	1314
Roller elements	1127
Roller guide rails	1205, 1208
Rollers heavy-load	1891
Rotary discs	1183
Rotary module pneumatic	1159-1161, 1163
Rotary module pneumatic heavy duty version	1162, 1164
Rotary positioning tables	1184
Rotary positioning tables with position indicators	1185
Rotary shaft lip seals DIN 3760	1504-1507
Round and square tubes	1774
Round brackets	1612
Round sling hooks grade 8	1031
Round sling links grade 8	1032
Rubber buffers conical	1573
Rubber buffers parabolic	1572
Rubber buffers spherical	1573
Rubber buffers stainless steel, type B	1563
Rubber buffers stainless steel, type C	1567
Rubber buffers stainless steel, type D	1570
Rubber buffers stainless steel, type E	1565
Rubber buffers steel or stainless steel, type A	1560
Rubber buffers steel or stainless steel, type B	1562
Rubber buffers steel or stainless steel, type C	1566
Rubber buffers steel or stainless steel, type D	1569
Rubber buffers type AT tapered	1561
Rubber buffers type CT tapered	1568
Rubber buffers type DS suction foot	1571
Rubber buffers type E	1564
Rubber impact buffers type TP door buffer	1571
Rubber-metal impact buffer rails	1574
S	**Page**
Safety cable	333
Safety spiral cable	333
Screw plugs	1721, 1726
Screw plugs aluminium	1725
Screw plugs aluminium with magnet	1724
Screw plugs hex head with collar DIN 910	1720
Screw plugs with collar and hexagon socket DIN 908	1719
Screw plugs with dipstick	1727
Screw plugs with hexagon socket	1722
Screw plugs with hexagon socket DIN 906, tapered thread	1718
Screw plugs with magnet	1724
Screw rest inserts spherical, centring disc, prism, locating pin, revolving ball	156
Screw rest with flat face and magnetic foot, aluminium	154
Screw rest with flat face, aluminium	154
Screw rest with flat face, stainless steel	153
Screw rest with flat face, steel	153
Screw stops adjustable	212
Screws with countersunk head hexagon socket DIN EN ISO 10642	938
Seating blocks adjustable	458
Seating ledges	1864
Security hinge switch long version	1709
Security hinge switches	1708
Self-aligning pads	108-109
Self-aligning pads adjustable	117
Self-aligning pads adjustable with O-ring	118-119
Self-aligning pads adjustable with O-ring and exchangeable inserts	120-123
Self-aligning pads adjustable with O-ring and hexagon socket	124-125
Self-aligning pads adjustable with O-ring, exchangeable inserts and hexagon socket	126-127
Self-aligning pads self-righting	116, 146-147
Self-aligning pads swivel 12°	144
Self-aligning pads swivel angle 14° and 20°	110-111
Self-aligning pads with O-ring	112-113
Self-aligning pads with O-ring and exchangeable inserts	114-115
Self-locking hooks grade 10	1027
Sensor holder	1170-1171
Sensor holders	1130
Shaft clamping units	358
Shaft collar one-piece, with clamping lever	1036
Shaft collars one-piece	1035
Shaft collars one-piece wide	1037
Shaft collars set screw DIN 705, stainless steel	1034
Shaft collars set screw DIN 705, steel	1033
Shaft collars two-piece	1038
Shaft collars two-piece wide	1039
Shaft collars wide, for flat-milled shafts	1041
Shaft collars with thread	1040

Index

Shaft supports	1243, 1246
Shaft supports flanged	1248
Shaft supports standard	1247
Shaft-hub clamping sets stainless steel	1444
Shim washers DIN 988	977
Shortening hooks grade 10	1028
Shoulder screws flathead for DIN 173 drill bushes	1066
Shoulder screws Form B	979
Shoulder screws similar to DIN ISO 7379	980
Shoulder screws with hexagon head DIN 609	981
Shoulder screws with slotted domed head	982
Shoulder screws with slotted flat head DIN 923	978
Shrink discs Form A	1446-1447
Shrink discs Form B	1450-1451
Shrink discs stainless steel Form A	1448
Side brackets	1611
Side clamps robust	457
Side clamps with rest pad	456
Side stops	472
Single leaf hinges adjustable, stainless steel	1681
Slam latch with integrated safety function	562
Slam latches	561
Slide carriages DryLin® W	1201
Slide rails Type I	1122
Slides mini roller mounted	1146
Slip hooks grade 10	1026
Slot key profile type I	877
Slot keys	338
Slot keys loose DIN 6323	340
Slot keys with locating pin	340
Slot nuts strong Type I	877
Slot nuts twist-in Type B	878
Slot nuts twist-in Type I	875
Slot nuts twist-in with spring Type B	878
Slot nuts twist-in, keyed Type I	876
Slotted nuts with elastic lock	985
Slotted round nuts	1832
Slotted round nuts DIN 1804	984
Small conveyor belts with internal drive	1905
Snap-in pin for clevis joints DIN 71752	1594
Snapper catch with spring DIN 6310	982
Socket head screws DIN 912 / DIN EN ISO 4762, steel or stainless steel	922-923
Socket head screws DIN 912 / EN ISO 4762, LONG-LOK secured	925
Socket head screws DIN 912/DIN EN ISO 4762	924
Socket head screws full thread, DIN 912 / DIN EN ISO 4762	921
Socket head screws low head DIN 6912	926-927
Spacer bolts	409
Spacer for ball catch	204
Spacer rings	236
Spacer washers ground	978
Spacers for prisms attachments	1831
Spherical bearings K/E series DIN ISO 12240-1	1607
Spherical knobs	658
Spherical knobs revolving	659
Spherical levelling washers	976
Spherical roller bearing FAG cylindrical bore	1493
Spherical seating nuts	602
Spherical washers DIN 6319, edition 10/01	974-975
Spiral cam screws	445
Spiral cams	412
Splined shafts AT profile	1295
Splined shafts T profile	1294
Split pins EN ISO 1234	968
Spring fingers	1847
Spring hinges aluminium profile tension spring hinges, 0.20 Nm	1703
Spring hinges aluminium profile tension spring hinges, 0.35 Nm	1704
Spring hinges aluminium profile tension spring hinges, 0.7 Nm	1705
Spring hinges aluminium profile tension spring hinges, 1.3 Nm	1706
Spring hinges aluminium profile tension spring hinges, 3.8 Nm	1707
Spring hinges steel or stainless steel, 120 mm	1700
Spring hinges steel or stainless steel, 180 mm	1701
Spring hinges steel or stainless steel, 240 mm	1702
Spring hinges steel or stainless steel, 50 mm	1698
Spring hinges steel or stainless steel, 75 mm	1699
Spring mounted centre sleeves with tension lever	1838
Spring plungers plastic, with slot and stainless steel ball	176
Spring plungers smooth version	209
Spring plungers smooth version without collar, stainless steel	201
Spring plungers smooth version, double-sided	202
Spring plungers smooth version, extended, stainless steel	198
Spring plungers smooth version, plastic	200
Spring plungers smooth version, stainless steel	199
Spring plungers with detent ring	197
Spring plungers with end position feedback	178
Spring plungers with head	196, 201
Spring plungers with hexagon socket and ball, LONG-LOK secured stainless steel	186
Spring plungers with hexagon socket and ball, LONG-LOK secured, steel	183
Spring plungers with hexagon socket and ball, stainless steel	185
Spring plungers with hexagon socket and ball, steel	182
Spring plungers with hexagon socket and ceramic ball	184
Spring plungers with hexagon socket and POM thrust pin, LONG-LOK secured, stainless steel	195
Spring plungers with hexagon socket and POM thrust pin, LONG-LOK secured, steel	191
Spring plungers with hexagon socket and POM thrust pin, stainless steel	194
Spring plungers with hexagon socket and POM thrust pin, steel	190
Spring plungers with hexagon socket and thrust pin, long version	187
Spring plungers with hexagon socket and thrust pin, LONG-LOK secured, stainless steel	193
Spring plungers with hexagon socket and thrust pin, LONG-LOK secured, steel	189
Spring plungers with hexagon socket and thrust pin, stainless steel	192
Spring plungers with hexagon socket and thrust pin, steel	188
Spring plungers with slot and ball, LONG-LOK secured, stainless steel	175
Spring plungers with slot and ball, LONG-LOK secured, steel	172
Spring plungers with slot and ball, stainless steel	174
Spring plungers with slot and ball, steel	171
Spring plungers with slot and ceramic ball, stainless steel	173
Spring plungers with slot and POM ball	173
Spring plungers with slot and thrust pin, LONG-LOK secured, stainless steel	181
Spring plungers with slot and thrust pin, LONG-LOK secured, steel	179
Spring plungers with slot and thrust pin, stainless steel	180
Spring plungers with slot and thrust pin, steel	177
Spring plungers, smooth version, self-clamping, plastic	208
Spring washers DIN 137 B	958
Springs for clamp straps	989
Sprockets single 1“ x 17.02 mm DIN ISO 606	1348-1349
Sprockets single 1/2“ x 5/16“ DIN ISO 606	1331, 1342-1343
Sprockets single 1/2“ x 5/16“ DIN ISO 606, ready to install	1318-1320
Sprockets single 1/2“ x 5/16“ stainless steel DIN ISO 606	1336
Sprockets single 1“ x 17.02 mm DIN ISO 606	1334
Sprockets single 1“ x 17.02 mm DIN ISO 606, ready to install	1327-1329
Sprockets single 1“ x 17.02 mm stainless steel DIN ISO 606	1339
Sprockets single 3/4“ x 7/16“ DIN ISO 606	1346-1347
Sprockets single 3/4“ x 7/16“ DIN ISO 606, ready to install	1324-1326
Sprockets single 3/4“ x 7/16“ stainless steel DIN ISO 606	1338
Sprockets single 3/4” x 7/16” DIN ISO 606	1333
Sprockets single 3/8“ x 7/32“ DIN ISO 606, ready to install	1316-1317
Sprockets single 3/8“ x 7/32“ DIN ISO 606	1330, 1340-1341

Index

Sprockets single 3/8“ x 7/32“ stainless steel DIN ISO 606	1335
Sprockets single 5/8“ x 3/8“ DIN ISO 606	1344-1345
Sprockets single 5/8“ x 3/8“ DIN ISO 606	1332
Sprockets single 5/8“ x 3/8“ DIN ISO 606, ready to install	1321-1323
Sprockets single 5/8“ x 3/8“ stainless steel DIN ISO 606	1337
Spur gears in steel, module 1 toothing milled, straight teeth, engagement angle 20°	1352-1353
Spur gears in steel, module 1.5 toothing milled, straight teeth, engagement angle 20°	1354-1355
Spur gears in steel, module 2 toothing milled, straight teeth, engagement angle 20°	1356-1357
Spur gears in steel, module 2.5 toothing milled, straight teeth, engagement angle 20°	1358-1359
Spur gears in steel, module 3 toothing milled, straight teeth, engagement angle 20°	1360-1361
Square hollow profiles grey cast iron	102
Standard inspection and test fixture elements	1811
Star grips aluminium, similar to DIN 6336	632-633
Star grips antistatic similar to DIN 6336	646
Star grips grey cast iron, DIN 6336	636
Star grips metal parts stainless steel, similar to DIN 6336	642
Star grips quick-acting	650
Star grips similar to DIN 6336	637, 644-645
Star grips similar to DIN 6336, metal parts stainless steel	638
Star grips stainless steel, similar to DIN 6336	634-635
Star grips with projecting steel bush	640-641
Star grips with safety cable metal parts stainless steel, similar to DIN 6336	643
Star grips with safety cable similar to DIN 6336	648-649
Step block sets	158
Step blocks	158
Stepper motor	1163
Stepper motor with integrated positioning control	1164-1165
Stop screws	213-214, 1142
Stop sets	1868
Stop, adjustable with end position feedback	152
Stops adjustable	212
Strap hinges stainless steel with grease nipple	1683
Straps	1109, 1140
Studs	867
Studs DIN 6379	868-869
Studs with screw-in stop for gluing in	1002
Subplates	84-85
Subplates machined all sides grey cast iron	86
Suction hoses LOC-LINE® FLEXI 75	1912
Suction hoses LOC-LINE® FLEXI 75 antistatic	1913
Supercraft soft faced hammer recoilless	1922
Support bolts	137
Support cylinders for workpieces with collar	1795
Support element	163
Support elements cylindrical	159
Swing clamps	416, 428
Swing clamps mini	415
Swing clamps mini, with cam lever	414
Swing clamps pneumatic	564
Swing screws	576
Swivel and fixed castors electrically conductive, standard version	1873
Swivel and fixed castors heavy-duty version	1874, 1879, 1882, 1885-1886
Swivel and fixed castors medium-duty version	1881
Swivel and fixed castors standard version	1872, 1876, 1878, 1880, 1884
Swivel and fixed castors steel plate, electrically conductive standard version	1877
Swivel and fixed castors steel plate, electrically conductive, heavy-duty version	1875
Swivel and fixed castors welded steel heavy-duty version	1883
Swivel angles	1186
Swivel bales	1018
Swivel bales with axial ring	1014
Swivel castors compact version	1887
Swivel feet	920
Swivel feet ball joints with internal thread	1639
Swivel feet plates antistatic	1628
Swivel feet plates die-cast zinc or stainless steel	1630-1631
Swivel feet plates extended die-cast zinc	1632
Swivel feet plates plastic	1627
Swivel feet plates stainless steel	1633
Swivel feet plates with vibration absorption	1635
Swivel feet threaded spindles steel or stainless steel	1638
Swivel feet with vibration absorption	1636
Swivel hold-down clamps mini, with cam lever	480
Swivel hooks grade 10	1029
Swivel pads	148
T	**Page**
Talon grips	449
Talon grips round	450
Taper clamping bushes	1414-1417
Taper cleaners for hollow shank tapers	1924
Taper cleaners for Morse tapers	1923
Taper cleaners for short tapers	1923
Taper grips	706-707
Taper grips fixed	703
Taper grips revolving	704
Tapered knobs	664
Tapered roller bearing FAG single row	1495
Technical data for pot magnets	1069
Technical InFormation for Adjusting Nuts	986
Telescope rails	1215
Telescope rails S-form	1216-1217
Telescopic rails double arrangement	1214
Telescopic rails Double-T form	1212-1213
Tension lever	714
Tension lever flat	715
Tension levers	716
Tension levers external thread	723
Tension levers external thread, stainless steel	724
Tension levers flat external thread	729
Tension levers flat external thread, stainless steel	730
Tension levers flat internal thread	727
Tension levers flat internal thread, stainless steel	728
Tension levers internal thread	721
Tension levers internal thread, stainless steel	722
Tension levers safety external thread	726
Tension levers safety internal thread	725
T-grips	788-789
T-grips stainless steel	787
Threaded inserts	995
Threaded inserts reinforced	996
Threaded inserts reinforced internal thread, self-locking	999
Threaded inserts self-tapping with cutting bores	994
Threaded inserts self-tapping with cutting slot	992
Threaded inserts solid body	997
Threaded inserts with internal thread, self-locking	998
Threaded rods steel and stainless steel DIN 976-1	989
Thrust pads	916, 918
Thrust pads DIN 6311 enhanced	917
Thrust pads for power clamp	486
Thrust pads with retaining pin	917
Thrust screws	905
Thrust screws LONG-LOK secured	907
Thrust screws neoprene	506
Thrust screws stainless steel	906
Thrust screws with point	909

Index

Thrust screws with radiused half-dog point	910
Thrust screws with thrust pad	505
Thrust spindles	919
Thrust spindles spring mounted	504
Thrust washers	1048, 1481
Thrust washers plastic	1476
Tightening screws	489
T-nuts	880
Toe clamps	476
Toe clamps compact	462
Toe clamps for T-slots	448
Toggle clamps heavy duty version straight foot	518
Toggle clamps heavy duty vertical	517
Toggle clamps horizontal large version	500
Toggle clamps horizontal with flat foot and adjustable clamping spindle	580-581
Toggle clamps horizontal with flat foot and adjustable clamping spindle, stainless steel	582, 584
Toggle clamps horizontal with horizontal foot	500
Toggle clamps horizontal with push rod	502
Toggle clamps horizontal with safety interlock with flat foot and adjustable clamping spindle	583
Toggle clamps horizontal with safety interlock with flat foot and adjustable clamping spindle, stainless steel	584
Toggle clamps horizontal with safety interlock with straight foot and adjustable clamping spindle	587
Toggle clamps horizontal with safety interlock with straight foot and adjustable clamping spindle, stainless steel	588
Toggle clamps horizontal with straight foot	501
Toggle clamps horizontal with straight foot and adjustable clamping spindle	585
Toggle clamps horizontal with straight foot and adjustable clamping spindle, stainless steel	586
Toggle clamps variable horizontal with horizontal foot	507
Toggle clamps variable vertical with horizontal foot	508
Toggle clamps variable with thrust rod	509
Toggle clamps vertical with angled foot	498
Toggle clamps vertical with flat foot and adjustable clamping spindle	590-591
Toggle clamps vertical with flat foot and adjustable clamping spindle, stainless steel	592-593
Toggle clamps vertical with horizontal foot	493
Toggle clamps vertical with horizontal foot and full clamping lever	494
Toggle clamps vertical with horizontal foot, large version	495
Toggle clamps vertical with safety interlock with flat foot and adjustable clamping spindle	593-595
Toggle clamps vertical with safety interlock with flat foot and adjustable clamping spindle, stainless steel	596-597
Toggle clamps vertical with safety interlock with straight foot and adjustable clamping spindle	600
Toggle clamps vertical with safety interlock with straight foot and adjustable clamping spindle, stainless steel	601
Toggle clamps vertical with straight foot	496
Toggle clamps vertical with straight foot and adjustable clamping spindle	598
Toggle clamps vertical with straight foot and adjustable clamping spindle, stainless steel	599
Toggle clamps vertical with straight foot and full clamping lever	497
Toggle clamps with push rod push-pull operation, for bracket mounting	503
Toggle hook clamps and catch plate	499
Toggle mini clamps	501
Tolerance rings	1902
Tombstones cube	104-105
Tombstones cube grey cast iron	106
Tombstones double-sided	92-93
Tombstones double-sided grey cast iron	95
Tombstones single-sided	90-91
Tombstones window frame	94
Tommy bars with fixed or sliding T-bar, DIN 6305 or DIN 6307	620
Tongue for quarter-turn lock	538
Toothed belt profile HTD 5M	1306
Toothed belt profile HTD 8M	1307
Toothed belt pulleys AT profile	1284-1285
Toothed belt pulleys T profile	1282-1283
Toothed belts AT profile	1302-1303
Toothed belts by the meter AT profile	1304-1305
Toothed belts by the meter T profile	1300-1301
Toothed belts T profile	1297-1299
Toothed pulleys profile HTD 5M	1286
Toothed pulleys profile HTD 5M, for assembly with taper clamping bushes	1290
Toothed pulleys profile HTD 8M	1287-1289
Toothed pulleys profile HTD 8M, for assembly with taper clamping bushes	1291-1293
Torque grips	915
Torque grips precision version	911
Torque screws with ball thrust points	916
Torque screws with slot coupling	914
Torque screws with support pin	915
Torque screws with thrust point	914
T-profiles machined all sides grey cast iron or aluminium	99
Traction cone for internal clamping collet	319
Trapezoidal rolled thread spindles RH thread, single-start	1510
Trapezoidal thread flange nuts RH thread, single-start	1511
Trapezoidal thread round nuts RH thread, single-start	1511
Traverses fixed	1244
Traverses moveable	1245
Triangular grips	801
Triangular grips with high collar	802
Triangular torque grips	913
T-slot bolts DIN 787	870-871
T-slot bolts DIN 787, 12.9	872
T-slot clamps	454
T-slot keys	338
T-thrust screws with fixed or sliding T-bar, DIN 6304 or DIN 6306	621
Tube clamps base, aluminium	1754, 1756
Tube clamps base, plastic	1753, 1756
Tube clamps base, stainless steel	1755
Tube clamps cross, aluminium	1743-1744, 1746-1747
Tube clamps cross, plastic	1743, 1746-1747
Tube clamps cross, stainless steel	1745
Tube clamps flange, aluminium	1758-1759, 1761
Tube clamps flange, plastic	1757, 1761
Tube clamps flange, stainless steel	1760
Tube clamps right-angle, aluminium	1752
Tube clamps straight, plastic	1762
Tube clamps swivel base, aluminium	1772
Tube clamps swivel base, plastic	1771
Tube clamps swivel base, sunken teeth, plastic	1766
Tube clamps swivel half, raised teeth, plastic	1764
Tube clamps swivel half, sunken teeth, plastic	1763, 1765
Tube clamps swivel, aluminium	1768, 1770
Tube clamps swivel, plastic	1767, 1769
Tube clamps T-angle, aluminium	1749, 1752
Tube clamps T-angle, plastic	1748, 1751
Tube clamps T-angle, stainless steel	17501741
Tube end plugs	1775
Tube inserts round with tapped bush	1653
Tube inserts square with tapped bush	1652
Tubular bubble levels with frame to screw on	1261
Tubular handles	853
Tubular handles angled	852

Index

Turnbuckle nuts hexagonal DIN 1479	951
Turnbuckle nuts steel tube, closed form DIN 1478	950
U	**Page**
Universal joints double with needle bearing, DIN 808	1458
Universal joints double with plain bearing, DIN 808	1456
Universal joints double with plain bearing, robust version DIN 808	1460
Universal joints single with needle bearing, DIN 808	1457
Universal joints single with plain bearing, DIN 808	1455
Universal joints single with plain bearing, robust version DIN 808	1459
U-profiles machined all sides grey cast iron or aluminium	101
V	**Page**
V-block machined all sides extra wide, grey cast iron	100
V-block machined all sides grey cast iron or aluminium	100
V-blocks with stop	1061
Vent screws	1729
Vent screws brass	1732
Vent screws brass with check valve	1732
Vent screws with check valve	1731
Vent screws with check valve and dipstick	1735
Vent screws with dipstick	1734
Vent screws with splash guard	1730
Vertical bracket long	1181
Vertical bracket short	1180
Vice jaws complete	1856
Vices	1849
W	**Page**
Washers for clamps steel or aluminium DIN 6340	962
Washers large OD DIN 9021	959
Washers medium DIN EN ISO 7089 A	956
Wedge clamps	463, 475
Wedge clamps double jaw faces serrated	469
Wedge clamps jaw face smooth or serrated	465
Wedge clamps jaw faces serrated	467
Wedge clamps machinable	464, 466, 468
Wedge supports	159
Weld-on D-rings	1010
Wheels aluminium rims with injection-moulded tread	1891
Wheels heavy-load wheel body welded	1892
Wheels polyamide	1892
Wheels polyamide heavy-duty version	1893
Wheels polyamide with injection-moulded tread	1889
Wheels rubber tyres on die-cast aluminium rims	1889
Wheels rubber tyres on steel plate rims	1888
Wing grips	791, 798
Wing grips “Miniwing”	794
Wing grips “Miniwing” antistatic	796
Wing grips “Miniwing” with tapped through bush	795
Wing grips antistatic	793
Wing grips for hexagon socket screws	619
Wing grips internal thread, stainless steel	790
Wing grips one-sided	797
Wing grips with tapped through bush	792
Wing nuts DIN 315	941
Wing screws DIN 316	940
Woodruff keys DIN 6888	342
Workpiece support cylinders	162
Workpiece supports	161, 164-165
Workpiece supports adjustable	160
Worm drives	1394-1395
Worm gears, right-hand centre distance 17 mm	1370-1371
Worm gears, right-hand centre distance 22.62 mm	1372-1373
Worm gears, right-hand centre distance 25 mm	1374-1375
Worm gears, right-hand centre distance 31 mm	1376-1377
Worm gears, right-hand centre distance 33 mm	1378-1379
Worm gears, right-hand centre distance 35 mm	1380-1381
Worm gears, right-hand centre distance 40 mm	1382-1383
Worm gears, right-hand centre distance 50 mm	1384-1385
Worm gears, right-hand centre distance 53 mm	1386-1387
Worm gears, right-hand centre distance 63 mm	1388-1389
Worm gears, right-hand centre distance 65 mm	1390-1391
Worm gears, right-hand centre distance 80 mm	1392-1393

DIN	Description	nlm	Page
DIN 39	Machine handles fixed steel, DIN 39 Form E	06291	697
	Machine handles, fixed, DIN 39 Form E, stainless steel	6293	698
	Machine handles fixed aluminium, DIN 39 Form E	06292	698
DIN 39 similar	Machine handles fixed steel, similar to DIN 39	06290	697
	Machine handles fixed straight form, similar to DIN 39	06311	701
DIN 98 similar	Machine handles revolving similar to DIN 98 Form E, steel	06308	699
	Machine handles revolving aluminium, similar to DIN 98 Form E	06309	699
	Machine handles revolving similar to DIN 98 Form E, stainless steel	06309-01	700
	Machine handles revolving steel, similar to DIN 98	06310	701
	Machine handles revolving straight form, similar to DIN 98	06312	702
DIN 99	Levers 20° DIN 99	06330	713
DIN 137 B	Spring washers DIN 137 B	07304	958
DIN 172	Drill bushes with collar DIN 172	08910	1063
DIN 173	Shoulder screws flathead for DIN 173 drill bushes	08927	1066
	Drill bushes push-in DIN 173	08920	1064
DIN 173-1	Drill bushes push-in DIN 173-1	08920	1065
	Drill bush clamps DIN 173-1	08926	1066
DIN 179	Drill bushes cylindrical DIN 179	08900	1062
DIN 315	Wing nuts DIN 315	07200	941
DIN 316	Wing screws DIN 316	07199	940
DIN 319	Ball knobs stainless steel or aluminium DIN 319	6247	661
DIN 319 enhanced	Ball knobs smooth DIN 319 enhanced	06250	662-663
	Ball knobs thermoplastic DIN 319 enhanced	06247	660
DIN 439	Hexagon nuts thin type DIN 439	07212	943
DIN 444 B	Eye bolts DIN 444, Form B	07180	939
DIN 464	Knurled screws high form steel and stainless steel, DIN 464	06090	607
DIN 466	Knurled nuts high steel and stainless steel, DIN 466	06110	615
DIN 467	Knurled nuts flat steel and stainless steel, DIN 467	06120	615
DIN 468	Crank handles offset similar to DIN 468	06480	760
DIN 469	Crank handles straight similar to DIN 469	06490	761
DIN 471	Circlips for shafts DIN 471	07330	964-965
DIN 472	Circlips for bores DIN 472	07331	966
DIN 508 enhanced	Nuts for T-slots DIN 508 enhanced	07060	873
DIN 551	Grub screws DIN 551	07630	988
DIN 580	Ring bolts DIN 580 / stainless steel similar to DIN 580	07680	1004
DIN 580 similar	Ring bolts similar to DIN 580	07680-01	1004
DIN 582	Ring nuts DIN 582 stainless steel similar to DIN 582	07690	1005
DIN 582 similar	Ring nuts similar to DIN 582	07690-01	1005
DIN 609	Shoulder screws with hexagon head DIN 609	07535	981
DIN 626	Deep groove ball bearings stainless steel, DIN 626	23800-01	1489
DIN 653	Knurled screws low head steel and stainless steel, DIN 653	6089	606
DIN 705	Shaft collars set screw DIN 705, steel	07800	1033
	Shaft collars set screw DIN 705, stainless steel	07800	1034
DIN 787	T-slot bolts DIN 787	07040	870-871
	T-slot bolts DIN 787, 12.9	07040	872
DIN 808	Universal joints single with plain bearing, DIN 808	23403	1455
	Universal joints double with plain bearing, DIN 808	23404	1456
	Universal joints single with needle bearing, DIN 808	23406	1457
	Universal joints double with needle bearing, DIN 808	23407	1458
	Universal joints single with plain bearing, robust version DIN 808	23409	1459
	Universal joints double with plain bearing, robust version DIN 808	23410	1460
DIN 878	Dial gauges DIN 878	32540	1809
DIN 906	Screw plugs with hexagon socket DIN 906, tapered thread	28013	1718
DIN 908	Screw plugs with collar and hexagon socket DIN 908	28014	1719
DIN 910	Screw plugs hex head with collar DIN 910	28016	1720
DIN 912 / DIN EN ISO 4762	Socket head screws full thread, DIN 912 / DIN EN ISO 4762	07159	921
	Socket head screws DIN 912 / DIN EN ISO 4762, steel or stainless steel	07160	922-923
	Socket head screws DIN 912/DIN EN ISO 4762	07160	924
	Socket head screws DIN 912 / EN ISO 4762, LONG-LOK secured	07160	925
DIN 913	Grub screws with flat point hexagon socket DIN 913	07165	928

DIN	Description	nlm	Page
DIN 914 / DIN EN ISO 4027	Grub screw with hexagon socket and pointed end DIN 914 / DIN EN ISO 4027	07166	929
DIN 923	Shoulder screws with slotted flat head DIN 923	07530	978
DIN 931 / DIN EN ISO 4014	Hexagon head bolts DIN 931/DIN EN ISO 4014/DIN EN 24014	07170	930-931
DIN 933	Hexagon head bolts DIN 933	07171	932-933
DIN 934 / DIN EN ISO 4032	Hexagon nuts DIN 934/DIN EN ISO 4032/DIN EN 24032	07210	942
DIN 950	Handwheels DIN 950, grey cast iron	06271	678-679
	Handwheels DIN 950, stainless steel	06274	682
	Handwheels DIN 950, aluminium	06273	680-681
DIN 950 similar	Handwheels disc similar to DIN 950, aluminium	06279	694
DIN 976-1	Threaded rods steel and stainless steel DIN 976-1	07640	989
DIN 980	Hexagon nuts with thread lock DIN 980	07215	946
DIN 982	Hexagon nuts with polyamide thread lock high type, DIN 982	07213	944
DIN 985	Hexagon nuts with polyamide thread lock thin type, DIN 985	07214	945
DIN 988	Shim washers DIN 988	07522	977
DIN 1478	Turnbuckle nuts steel tube, closed form DIN 1478	07221	950
DIN 1479	Turnbuckle nuts hexagonal DIN 1479	07222	951
DIN 1587 similar	Hexagon domed cap nuts similar to DIN 1587	07280	956
DIN 1804	Slotted round nuts DIN 1804	07590	984
DIN 1810A enhanced	Hook wrench with lug DIN 1810A enhanced	96650	1926
DIN 2079	Carrier keys DIN 2079	03290	343
DIN 2093	Disc springs DIN EN 16983	07360	852
DIN 3404	Grease nipples button head DIN 3404	97944	1940
DIN 3405	Grease nipples flush type, DIN 3405	97942	1939
DIN 3760	Rotary shaft lip seals DIN 3760	23915	1504-1507
DIN 6303	Knurled nuts steel and stainless steel, DIN 6303	06010	604
DIN 6304, 6306	T-thrust screws with fixed or sliding T-bar, DIN 6304 or DIN 6306	06150	621
DIN 6305, 6307	Tommy bars with fixed or sliding T-bar, DIN 6305 or DIN 6307	06140	620
DIN 6310	Snapper catch with spring DIN 6310	07560	982
DIN 6311 enhanced	Thrust pads DIN 6311 enhanced	07140	917
DIN 6314	Clamp straps DIN 6314 straight, steel or aluminium	04080	373
DIN 6315	Clamp straps open U DIN 6315, steel or aluminium	04110	378
DIN 6315 C	Clamp straps open U DIN 6315 C, round pin, steel or aluminium	04150	382
DIN 6316	Clamp straps gooseneck DIN 6316 wide, steel or aluminium	04090	376
DIN 6319-10/01	Spherical washers DIN 6319, edition 10/01	07420	974-975
DIN 6320 (1971)	Feet with threaded pin, DIN 6320 (Edition 1971)	02030	136
DIN 6321 (1973)	Locating pins and rest pads DIN 6321 (Issue 1973)	02020	129
DIN 6323	Slot keys loose DIN 6323	03260	340
DIN 6325	Cylindrical pins DIN 6325	03320	345
DIN 6330 enhanced	Hexagon nuts height 1.5xD, DIN 6330 enhanced	07260	954
DIN 6331 enhanced	Hexagon nuts with collar height 1.5xD, DIN 6331 enhanced	07240	952
DIN 6332	Grub screws with thrust point DIN 6332	07120	908
DIN 6355	Palm grips grey cast iron DIN 6335	06160	626
	Palm grips plastic coated grey cast iron, DIN 6335	06161	627
DIN 6355 similar	Palm grips aluminium, similar to DIN 6335	06156	622-623
	Palm grips stainless steel, similar to DIN 6335	06158	624-625
	Palm grips similar to DIN 6335	06180	628
	Palm grips similar to DIN 6335 metal parts stainless-steel	06181	629
DIN 6336	Star grips grey cast iron, DIN 6336	06200	636
DIN 6336 similar	Star grips aluminium, similar to DIN 6336	06192	632-633
	Star grips stainless steel, similar to DIN 6336	06194	634-635
	Star grips similar to DIN 6336	06208	637
	Star grips similar to DIN 6336	06208	637
	Star grips similar to DIN 6336, metal parts stainless steel	06209	638
	Star grips with safety cable metal parts stainless steel, similar to DIN 6336	06212	643
	Star grips antistatic similar to DIN 6336	06220	646
	Star grips with safety cable similar to DIN 6336	06220	648-649
DIN 6337	Ball handles DIN 6337	06420	733
DIN 6340	Washers for clamps steel or aluminium DIN 6340	07320	962
DIN 6346	Parallel blocks pair DIN 6346	03200	336

DIN	Description	nlm	Page
DIN 6348	Drilling jigs size 3 to 5 DIN 6348	08550	1053
	Base plates DIN 6348	08580	1055
DIN 6348 enhanced	Drilling plates DIN 6348 enhanced	08570	1054
	Drilling jigs size 0 to 3 S DIN 6348 enhanced	08550	1052
DIN 6371	C-washers captive DIN 6371	07520	976
DIN 6372 enhanced	C-washers DIN 6372 enhanced	07380	972
DIN 6379	Studs DIN 6379	07030	868-869
DIN 6796	Conical spring washers DIN 6796	07303	957
DIN 6799	Circlips E-type DIN 6799	07332	967
DIN 6885 A	Parallel keys DIN 6885 A	03288	341
DIN 6888	Woodruff keys DIN 6888	03289	342
DIN 6912	Socket head screws low head DIN 6912	07161	926-927
DIN ISO 7379 similar	Shoulder screws similar to DIN ISO 7379	07534	980
DIN 7979	Cylindrical pins with internal thread DIN 7979	03325	345
DIN 9021	Washers large OD DIN 9021	07305	959
DIN 9832	Retaining clips, DIN 9832	23682	1472
DIN 9834/ ISO 9448	Guide bushes DIN 9834 / ISO 9448, bronze, maintenance-free with collar	23681	1471
DIN 11024	R-clips DIN 11024	07337	969
DIN 25201	Lock washer self-locking DIN 25201	07310	960
DIN 69002 similar	Elastomer dog couplings with conical hub and clamping ring (similar to DIN 69002)	23021	1407
DIN 69051-1	Ball screw linear actuators rolled, with flange nut DIN 69051 Part 5	24055	1513
DIN 71412	Grease nipples conical head DIN 71412	97940	1936-1937
DIN 71752	Clevis joints with snap-in pin DIN 71752	27620	1593
	Snap-in pin for clevis joints DIN 71752	27621	1594
	Clevis joints stainless steel DIN 71752	27622	1595
	Clevis joints DIN 71752	27624	1596
DIN 71802	Ball joints DIN 71802	27650	1608
DIN 71802 similar	Axial joints similar to DIN 71802	27665	1613
DIN 71803	Ball studs DIN 71803 for DIN 71802 angle joints	27656	1610
DIN 71805	Ball seats for ball joints DIN 71805	27655	1609
	Circlips for ball seats DIN 71805	27660	1612
DIN EN 1661	Hexagon nuts with flange EN 1661	07217	948
DIN EN 1665	Hexagon head bolts with flange EN 1665	07172	934
DIN EN ISO 1234	Split pins EN ISO 1234	07336	968
DIN EN ISO 7089 A	Washers medium DIN EN ISO 7089 A	07300	956
DIN EN ISO 7380	Button head screws EN ISO 7380	07174	936-937
DIN EN ISO 10642	Screws with countersunk head hexagon socket DIN EN ISO 10642	07175	938
DIN ISO 606	Roller chains single DIN ISO 606, curved link plate	22200	1312
	Roller chains single DIN ISO 606, straight link plate	22208	1313
	Links DIN ISO 606	22208	1312-1313
	Roller chains single stainless steel DIN ISO 606, curved link plate	22212	1314
	Roller chains single stainless steel DIN ISO 606, curved link plate	22212	1314
	Sprockets single 1/2“ x 5/16“ DIN ISO 606, ready to install	22250	1318-1320
	Sprockets single 1“ x 17.02 mm DIN ISO 606, ready to install	22250	1327-1329
	Sprockets single 3/4" x 7/16" DIN ISO 606, ready to install	22250	1324-1326
	Sprockets single 3/8" x 7/32" DIN ISO 606, ready to install	22250	1316-1317
	Sprockets single 5/8“ x 3/8“ DIN ISO 606, ready to install	22250	1321-1323
	Sprockets single 1/2“ x 5/16“ DIN ISO 606	22252	1331
	Sprockets single 1“ x 17.02 mm DIN ISO 606	22252	1334
	Sprockets single 3/4” x 7/16” DIN ISO 606	22252	1333
	Sprockets single 3/8“ x 7/32“ DIN ISO 606	22252	1330
	Sprockets single 5/8“ x 3/8“ DIN ISO 606	22252	1332
	Sprockets single 1/2“ x 5/16“ stainless steel DIN ISO 606	22255	1336
	Sprockets single 1“ x 17.02 mm stainless steel DIN ISO 606	22255	1339
	Sprockets single 3/4“ x 7/16“ stainless steel DIN ISO 606	22255	1338
	Sprockets single 3/8“ x 7/32“ stainless steel DIN ISO 606	22255	1335
	Sprockets single 5/8“ x 3/8“ stainless steel DIN ISO 606	22255	1337
	Sprockets single 1/2“ x 5/16“ DIN ISO 606	22264	1342-1343
	Sprockets single 1" x 17.02 mm DIN ISO 606	22264	1348-1349
	Sprockets single 3/4" x 7/16" DIN ISO 606	22264	1346-1347

DIN	Description	nlm	Page
	Sprockets single 3/8“ x 7/32“ DIN ISO 606	22264	1340-1341
	Sprockets single 5/8" x 3/8" DIN ISO 606	22264	1344-1345
DIN ISO 7379 similar	Shoulder screws similar to DIN ISO 7379	07534	980
DIN ISO 12240-1	Spherical bearings K/E series DIN ISO 12240-1	27632-02	1607
ISO 8752	Roll dowel heavy duty ISO 8752	03315	344

WE10ENCAT1810

www.norelem.com

EN